Degelman

OPERATOR & PARTS MANUAL

HDSR
HEAVY DUTY STAGGERED RIPPER

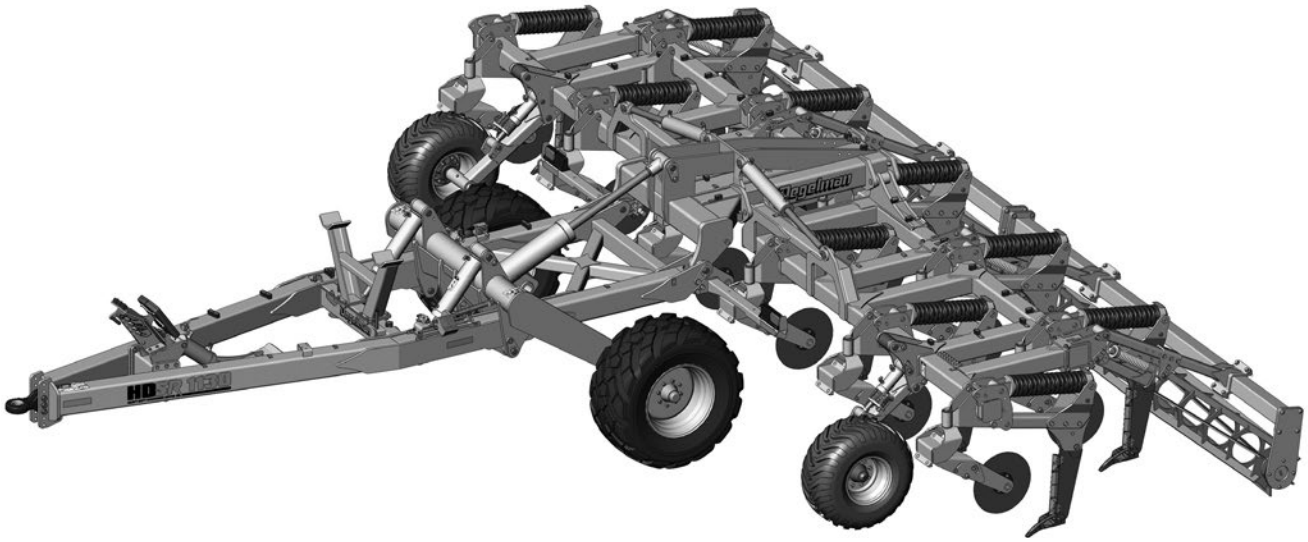



HDSR
HEAVY DUTY STAGGERED RIPPER

143669 v1.0

DEGELMAN INDUSTRIES LP
BOX 830-272 INDUSTRIAL DRIVE,
REGINA, SK, CANADA, S4P 3B1
FAX 306.543.2140 PH 306.543.4447
1.800.667.3545 DEGELMAN.COM

HDSR 1130 | 1520
HEAVY DUTY STAGGERED RIPPER
SN: **HDSR00108** & above

QUICK-START GUIDE*
for HDSR 930-1520
(Models with serial number HDSR00033 and up)

Degelman

A Connect Hydraulics

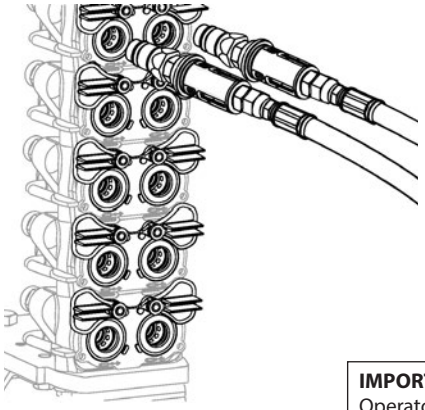

1 WHEELS
2 SHANKS/CHOPPERS *(If equipped)*
3 TRANSPORT/WINGS
4 JACK

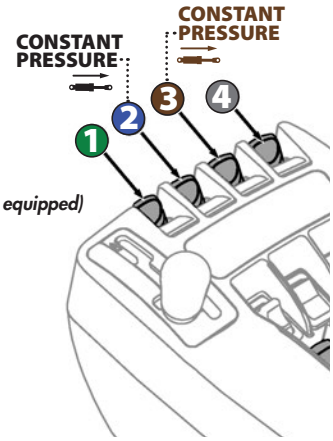

IMPORTANT: The ***Shank Circuit*** includes a ***Pressure Reducing Valve.*** Operator must engage shank circuit hydraulics **constantly** in the extended direction to ensure constant shank pressure. Adjust shank circuit and transport circuit flow down to 20-30% to reduce heat build-up. 2

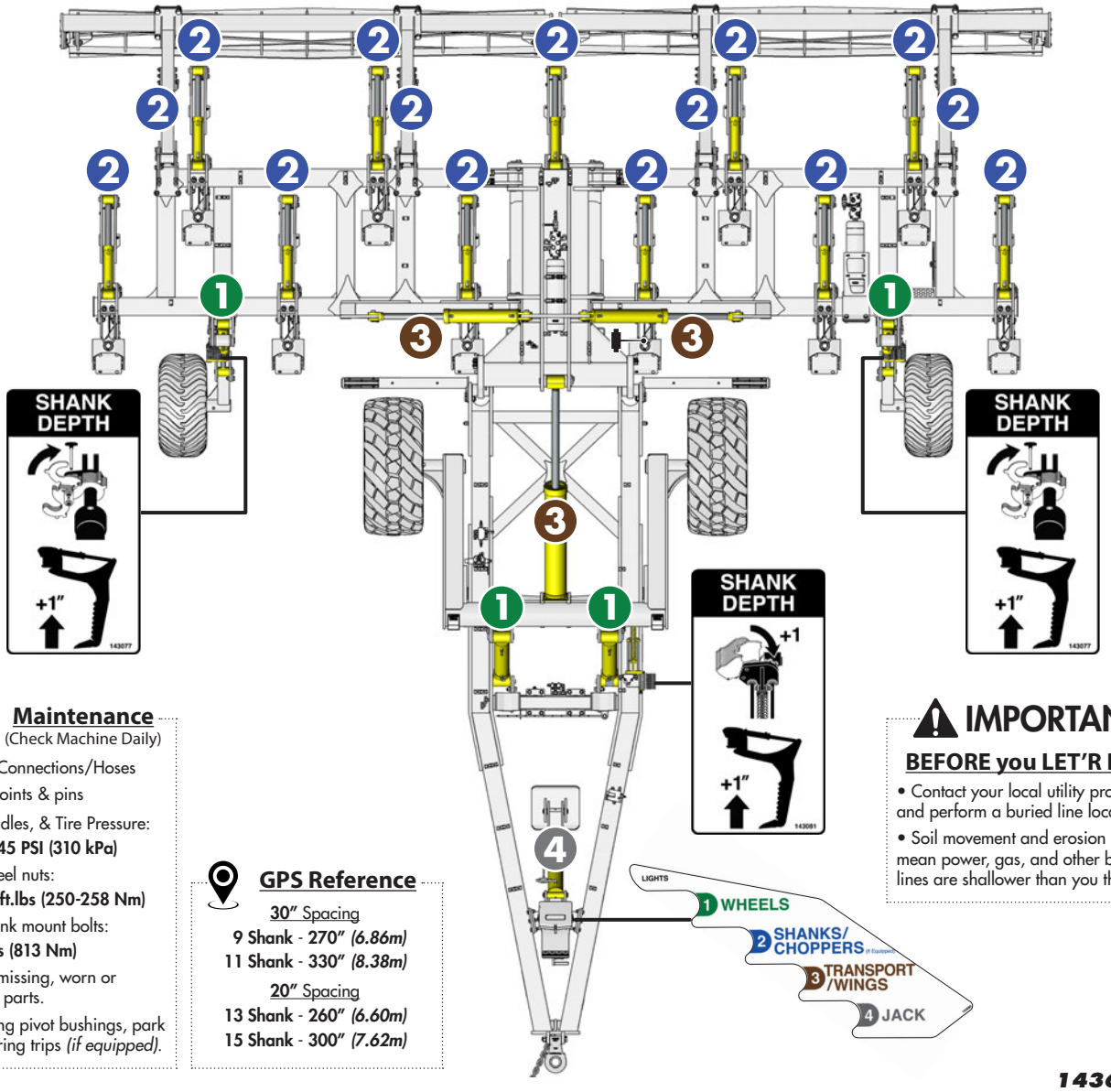

Maintenance
(Check Machine Daily)

- Hydraulic Connections/Hoses
- Working points & pins
- Hubs, Spindles, & Tire Pressure:
  - Wheels: **45 PSI (310 kPa)**
- Torque wheel nuts:
  - **185-190 ft.lbs (250-258 Nm)**
- Torque shank mount bolts:
  - **600 ft.lbs (813 Nm)**
- Check for missing, worn or damaged parts.
- Grease wing pivot bushings, park jack & spring trips *(if equipped).*

GPS Reference

30" Spacing
9 Shank - 270" *(6.86m)*
11 Shank - 330" *(8.38m)*

20" Spacing
13 Shank - 260" *(6.60m)*
15 Shank - 300" *(7.62m)*

IMPORTANT

BEFORE you LET'R RIP:

- Contact your local utility providers and perform a buried line locate.
- Soil movement and erosion can mean power, gas, and other buried lines are shallower than you think!

B Convert to Field Position

i) Adjust clevis height for tractor. Machine frame should be level when in lowest transport position.

ii) **Fully** extend wheel cylinders ❶ to raise machine.



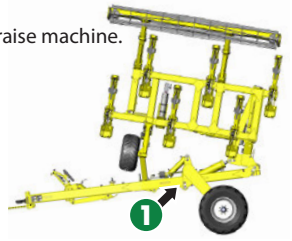

iii) Extend wing and transport cylinders ❸ to unfold.

⚠ IMPORTANT

NEVER UNFOLD WINGS WITHOUT FULLY EXTENDING WHEEL CYLINDERS!

- If the **Transport Cylinder** starts to extend *before* the **Wing Cylinders**, **STOP** the unfolding process and consult the troubleshooting section.

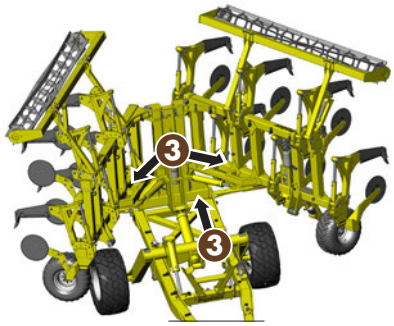

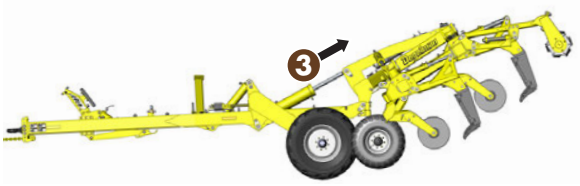

iv) For best results, keep machine level. Activate wing remote ❸ in ***constant pressure*** while machine is working in field.

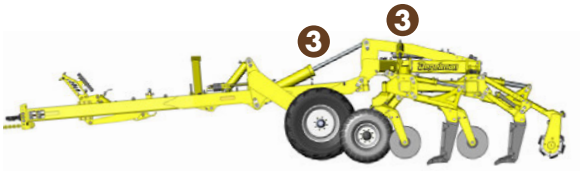

v) **IMPORTANT**: Ensure Shank circuit ❷ is set to ***constant pressure*** in the extended direction. *(If hydraulic shank equipped.)*

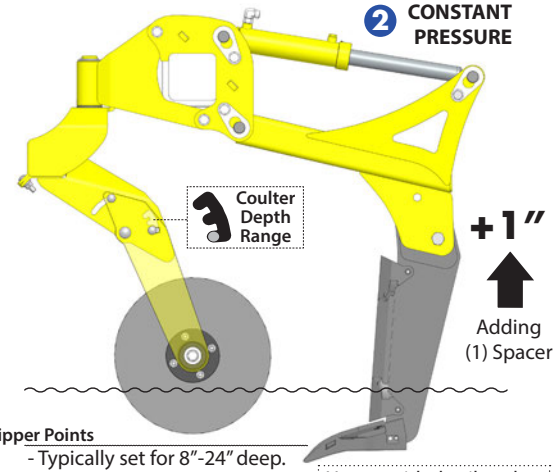

C Set Ripping Depth

ii Remove T-handle pin.

ii) Rotate spacers.

iii) Replace pins.

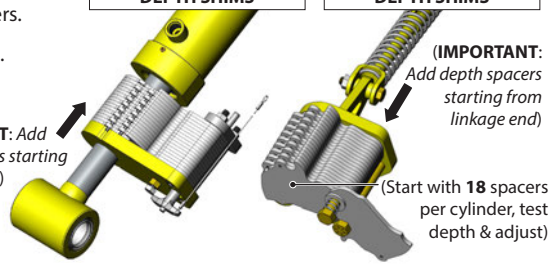

Adjust Coulter Depth Based on Expected Ripping Depth



- Loosen all 3 bolts with provided wrench.
- Move bolt to notch for expected ripping depth.
- Re-tighten all 3 bolts. *(Repeat for all coulter arms.)*

D Test. Check. Adjust.

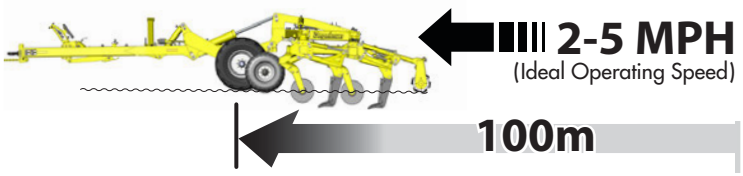

(**NOTE:** Ripping faster than 5 MPH increases likelyhood of breaking shank shear bolts. Replace with 5/8" GR8 bolts only.)

Adjusting Shank Pressure *(If hydraulic shank equipped.)*

Turn screw: ➦ Clockwise to increase pressure ⬆

➥ Counter-clockwise to decrease pressure ⬇

NOTE: 2200 psi = 3700 lb trip force (recommended)

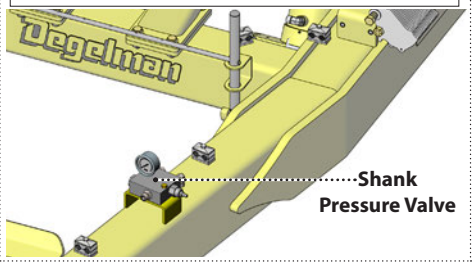

E

- Extend ❶ wheel cylinders for headland turns.
- Lift machine for deep ravines/ditches.

F Converting to Transport Position

- Follow the ***reverse*** of steps **"B"** shown above.

IMPORTANT:
- Fully extend wheel cylinders ❶ before attempting to fold in wings.
- Leave remote ❸ engaged after folding in wings so wheels ❶ can be retracted to lowest transport position.
- Ensure wing rollers are resting in transport cradles before road transport.

G ⚠ **MAX** Transport Speed: **40 km/h (25 MPH)**

© 2026 Degelman Industries LP

Degelman

HDSR
HEAVY DUTY STAGGERED RIPPER

**** Reference Sheet Quick-Start Guide***

OPERATORS SECTION - TABLE OF CONTENTS

IMPORTANT Safety Notice	
Introduction	***1***
Safety	***2***
Hook-Up	***4***
Transport	***6***
Transport to Field Position	*7*
Field to Transport Position	*8*
Operation	***9***
Pre-Operation Checklist	*9*
Operation Specification/Overview	*10*
Setting Ripping Depth	*13*
Troubleshooting	***15***
Service & Maintenance	***17***
Maintenance Checklist	*17*
Repair - Replacement Parts	*20*
Repair - Accumulator Adjustment	*21*
Repair - Wheel Hub	*23*
Repair - Hyd Cylinder Repair	*24*
Repair - Pressed Bushing	*25*
Decal Location Overview	*26*

Maintenance Free Pins & Bushings

IMPORTANT: *INSTALL DRY*



Do NOT use any oil/grease/lubricant on pin or bushing surfaces when installing the maintenance free pins into composite bushings.

PARTS SECTION - TABLE OF CONTENTS

HDSR Part Section Overview	*27*
Warranty	***51***

DEGELMAN INDUSTRIES LP
BOX 830-272 INDUSTRIAL DRIVE,
REGINA, SK, CANADA, S4P 3B1
FAX 306.543.2140 PH 306.543.4447
1.800.667.3545 DEGELMAN.COM

IMPORTANT:



READ MANUAL

Introduction

HDSR
HEAVY DUTY STAGGERED RIPPER

CONGRATULATIONS on your choice of a Degelman HDSR *(Heavy Duty Staggered Ripper)* to complement your farming operation. It has been designed and manufactured to meet the needs of a discerning agricultural market. Degelman HDSR shatters subsoil compaction in even the hardest, most compacted dirt, when your operation demands it. With an engineered tough frame, narrow transport width, and minimal maintenance design, the Degelman HDSR is the most versatile piece of deep tillage equipment you will ever own.

TO THE NEW OPERATOR OR OWNER - Safe, efficient and trouble free operation of your Degelman HDSR requires that you and anyone else who will be operating or maintaining it, read and understand the Safety, Operation, Maintenance and Troubleshooting information contained within this manual.

By following the operating instructions in conjunction with a good maintenance program your machine will provide many years of trouble-free service. Keep this manual handy for frequent reference and to pass on to new operators or owners. Call your Degelman Dealer if you need assistance, information, or additional copies of the manual.

OPERATOR ORIENTATION - The directions left, right, front and rear, as mentioned throughout the manual, are as seen from the tractor drivers' seat and facing in the direction of travel.

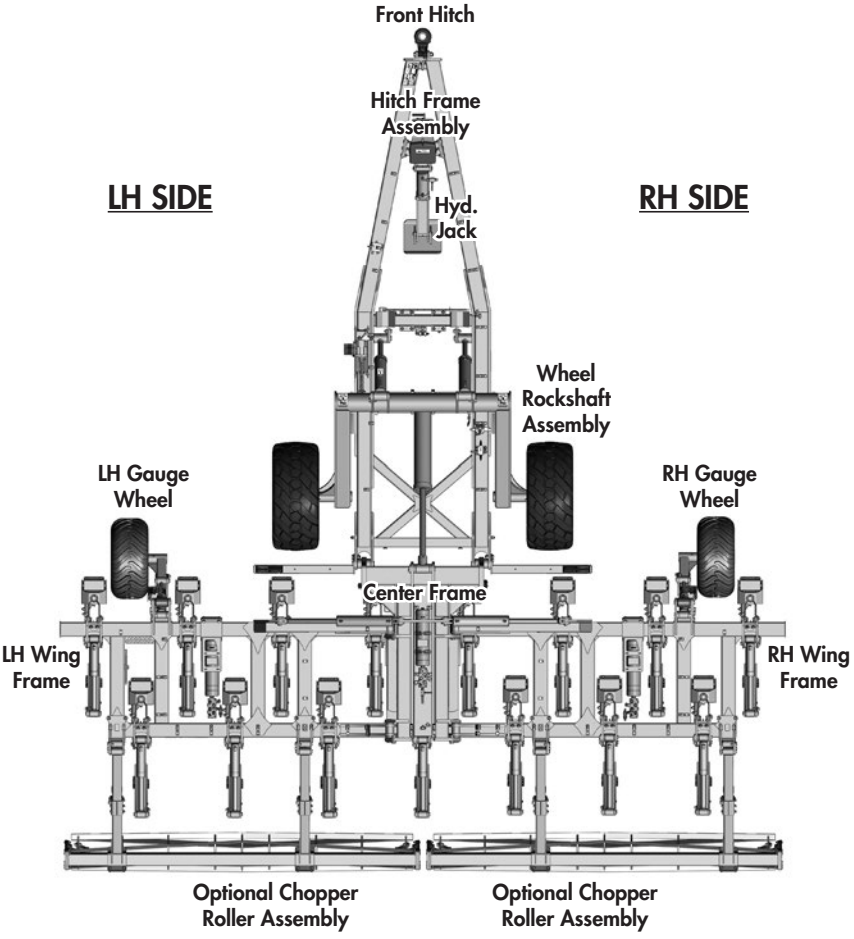

HDSR 1130
HEAVY DUTY STAGGERED RIPPER

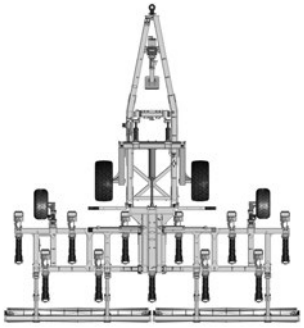

HDSR 1520
HEAVY DUTY STAGGERED RIPPER

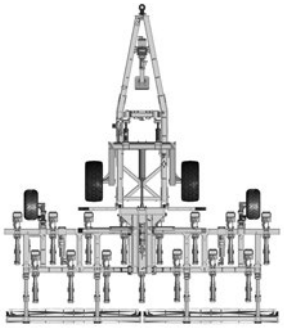

Why is SAFETY important to YOU?

3 **BIG** Reasons:

- Accidents Can Disable and Kill
- Accidents Are Costly
- Accidents Can Be Avoided



SAFETY ALERT SYMBOL

The **Safety Alert Symbol** identifies important safety messages applied to the HDSR and in this manual. When you see this symbol, be alert to the possibility of **injury or death**. Follow the instructions provided on the safety messages.

The **Safety Alert Symbol** means:

ATTENTION!
BECOME ALERT!
YOUR SAFETY IS INVOLVED!

SIGNAL WORDS

Note the use of the Signal Words: **DANGER**, **WARNING**, and **CAUTION** with the safety messages. The appropriate Signal Word has been selected using the following guidelines:

DANGER

DANGER: Indicates an imminently hazardous situation that, if not avoided, **WILL** result in death or serious injury if proper precautions are not taken.

WARNING

WARNING: Indicates a potentially hazardous situation that, if not avoided, **COULD** result in death or serious injury if proper precautions are not taken.

CAUTION

CAUTION: Indicates a potentially hazardous situation that, if not avoided, **MAY** result in minor or moderate injury if proper practices are not taken, or, serves as a reminder to follow appropriate safety practices.

SAFETY

YOU are responsible for the safe operation and maintenance of your Degelman HDSR.
YOU must ensure that you and anyone else who is going to operate, maintain or work around the HDSR be familiar with the operating and maintenance procedures and related **SAFETY** information contained in this manual.
This manual will take you step-by-step through your working day and alerts you to all good safety practices that should be adhered to while operating this equipment.

Remember, **YOU** are the key to safety. Good safety practices not only protect you but also the people around you. Make these practices a working part of your safety program. Be certain that **EVERYONE** operating this equipment is familiar with the recommended operating and maintenance procedures and follows all the safety precautions. Most accidents can be prevented. Do not risk injury or death by ignoring good safety practices.

- HDSR owners must give operating instructions to operators or employees before allowing them to operate the HDSR, and at least annually thereafter per OSHA regulation 1928.51.
- The most important safety device on this equipment is a SAFE operator. It is the operator's responsibility to read and understand ALL Safety and Operating instructions in the manual and to follow these. All accidents can be avoided.
- A person who has not read and understood all operating and safety instructions is not qualified to operate the machine. An untrained operator exposes himself and bystanders to possible serious injury or death.
- Do not modify the equipment in any way. Unauthorized modification may impair the function and/or safety and could affect the life of the equipment.
- Think SAFETY! Work SAFELY!

GENERAL SAFETY

1. Read and understand the Operator's Manual and all safety signs before operating, maintaining or adjusting.



2. Install and properly secure all shields and guards before operating. Use hitch pin with a mechanical locking device.
3. Have a first-aid kit available for use should the need arise and know how to use it.



4. Have a fire extinguisher available for use should the need arise and know how to use it.



5. Wear appropriate protective gear. This list includes but is not limited to:
   - A hard hat
   - Protective shoes with slip resistant soles
   - Protective glasses or goggles
   - Heavy gloves
   - Wet weather gear
   - Hearing protection
   - Respirator or filter mask

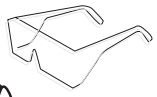



6. Clear the area of people, especially small children, and remove foreign objects from the machine before starting and operating.
7. Do not allow riders.
8. Stop tractor engine, set park brake, remove ignition key and wait for all moving parts to stop before servicing, adjusting, repairing or unplugging.
9. Review safety related items with all operators annually.

⚠ WARNING - Before Operation -

Contact your local utility providers and perform buried line location(s) **BEFORE** starting work.

Soil movement and erosion can mean power, gas, and other ***buried lines could be shallower than you think!***

Degelman Industries is not liable or responsible for any damage to underground utility lines *(natural gas, electrical power, water, phone, etc..)* sustained while using Degelman deep tillage products. It is the operator's responsibility to locate utility lines and to avoid their disturbance while using the tillage products.

HOOK-UP / UNHOOKING

The HDSR should always be parked on a level, dry area that is free of debris and foreign objects. Follow this procedure to hook-up:

1. Clear the area of bystanders and remove foreign objects from the machine and working area.
2. Make sure there is enough room to back the tractor up to the trailer hitch.
3. Start the tractor and slowly back it up to the hitch point.
4. Connect the hydraulics. To connect, proceed as follows:

- Use a clean cloth or paper towel to clean the couplers on the ends of the hoses. Also clean the area around the couplers on the tractor. Remove the plastic plugs from the couplers and insert the male ends.
- Be sure to match the pressure and return line to one valve bank.
- Hoses have been labelled in a suggested order of priority from most used to least: (1) Wheels, (2) Shanks/Rollers, (3) Transport/Wings, (4) Jack

5. Use the hydraulic jack controls to raise or lower the hitch to align with the drawbar.

   ⚠ **IMPORTANT:** Close the ball valve (if equipped) to prevent accidental operation of this circuit. Ensure ball valve handle remains in closed position.

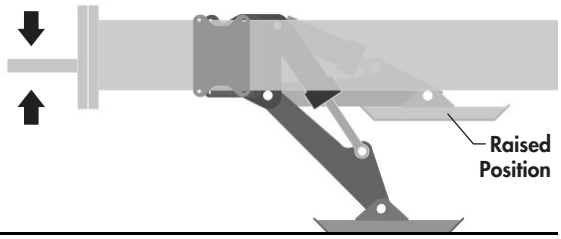

⚠ **WARNING:** *Tractor **MUST** be equipped with a clevis hitch to prevent unit from tipping upward while folding into and out of transport. A safety chain must also always be properly installed.*

6. Slowly back tractor up to align the hitch.
7. Install a drawbar pin with provisions for a mechanical retainer such as a KLIK pin. Install the retainer.
8. Install a safety chain between the tractor and the hitch.
9. Connect lights (electrical socket plug) to tractor.
10. Raise the hydraulic hitch jack.
11. When unhooking from the tractor, reverse the above procedure.

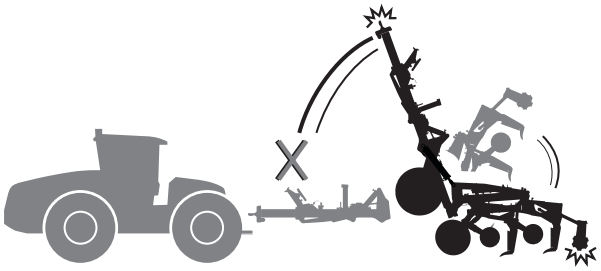

⚠ **WARNING/DANGER:**

Never *disconnect HDSR from tractor if rear sections of machine are partially raised.*

Negative Hitch Weight *may result, the hitch pole may suddenly raise, and the rear section would come crashing down. Only disconnect when unit is on level ground in the proper transport or field position.*





⚠ **WARNING/DANGER:**

*The tractor **MUST** be properly equipped with a clevis hitch and safety chain to prevent **Negative Hitch Weight** occurring when raising or lowering the rear sections.*

If the unit is not properly attached to the tractor with a clevis hitch and safety chain, the negative hitch weight could result in the hitch pole suddenly raising and the rear section to come crashing down.

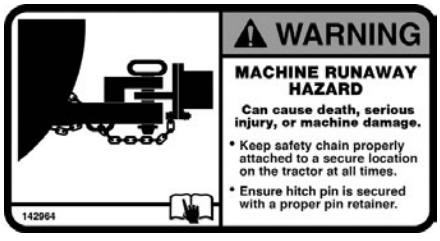

Adjustable Hitch Height

MACHINE LEVEL CALIBRATION

The HDSR (The Heavy Duty Staggered Ripper) comes equipped with auto-level technology. This means that if ripping depth is changed with the depth adjust shims, you do not need to make any further adjustment to the machine to keep the wing level.

You do, however, need to calibrate the hitch height for the tractor you intend to couple to the machine. A good rule of thumb is if the HDSR is level folded up in transport position, it will be level once unfolded and working in the field.

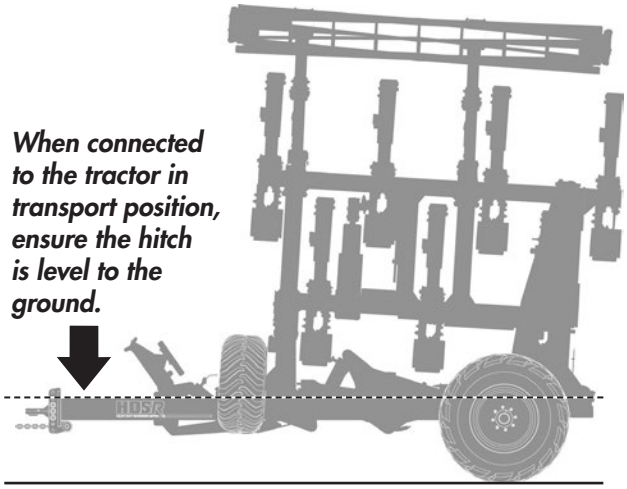

HITCH HEIGHT ADJUSTMENT

If the machine frame is not level in transport position and the front end of the frame is high, raise the hitch clevis one set of holes to lower the front of the frame.

If the machine frame is not level in transport position and the front end of the frame is low, lower the hitch clevis one set of holes to raise the front end of the frame.

1. Lower the hydraulic parking jack and disconnect HDSR from the tractor in transport position.
2. Remove the 3 bolts securing the hitch clevis to the HDSR hitch.

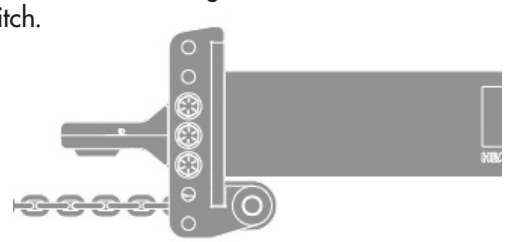

3. Move the hitch up or down a set of holes and replace bolts.
4. Re-connect the HDSR to the tractor and raise the parking jack.
5. Evaluate if further adjustment is needed. If the machine is level working in the field, re-torque 1" hitch clevis hardware to **770 ft·lb** ***(1044 N·M).***

Transport

TRANSPORT SAFETY

1. Read and understand ALL the information in the Operator's Manual regarding procedures and SAFETY when operating the HDSR in the field/ yard or on the road.
2. Check with local authorities regarding machine transport on public roads. Obey all applicable laws and regulations.
3. Always travel at a safe speed. Use caution when making corners or meeting traffic.
4. Make sure the SMV (Slow Moving Vehicle) sign, and all the lights and reflectors that are required by the local highway and transport authorities are in place, are clean and can be seen clearly by all overtaking and oncoming traffic. Be sure to check with local highway authorities and comply with their lighting and transport requirements.
5. Keep to the right and yield the right-of-way to allow faster traffic to pass. Drive on the road shoulder, if permitted by law.
6. Always use hazard warning flashers on tractor when transporting unless prohibited by law.
7. Always use a pin with provisions for a mechanical retainer and a safety chain when attaching to a tractor or towing vehicle.

TRANSPORTING

Use the following guidelines while transporting the HDSR*:*

1. Use a safety chain and a pin with provisions for a mechanical retainer.

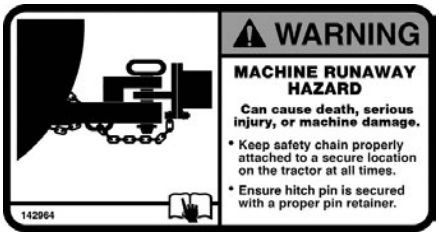

2. Ensure HSDR is in the full transport position with the wing rollers secure and properly in place.
3. Ensure debris that may fall or become dislodged during transport is removed.
4. Be sure hazard lights are flashing and SMV decal is visible.
5. MAXIMUM RECOMMENDED TRANSPORT SPEED: **MAX 40 km/hr** or **25 mph**. (Road Conditions, Field speeds may be lower.)

   Due to weight of the machine and tire ratings, do not exceed the recommended maximum speeds or severe tire damage / excessive wear may occur.
6. If the HDSR is to be towed in Transport for an extended duration with speeds up to 40km/hr, the centre frame wheels (transport tires) must be checked and properly inflated.

   Extended Transport Duration Inflation Rates:
   389 AGRIFLEX+: 500/60 R22.5: **58 PSI** (400 kPa)

   Standard Field Operation Inflation Rates:
   389 AGRIFLEX+: 500/60 R22.5: **45 PSI** (310 kPa)

⚠ **IMPORTANT:** *Under NO CIRCUMSTANCES should there ever be riders while the HDSR is in transport.*



Transport to Field Position Overview

TRANSPORT TO FIELD POSITION

⚠ **DANGER: CRUSHING HAZARD can cause serious injury or death.** *Ensure area is clear of bystanders before performing fold/unfold operation.*



FOLLOW PROCEDURE BELOW:

IMPORTANT: The HDSR model shown may differ, but the general procedure remains the same.
*(*HDSR 1130 shown)*

A. On level ground, position the HDSR so it is straight in-line behind the tractor. Adjust clevis height for tractor. Machine frame should be level when in lowest transport position.

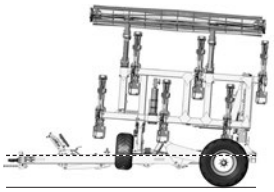

B. **Fully extend** the Wheel Cylinders (#1) to raise the machine.

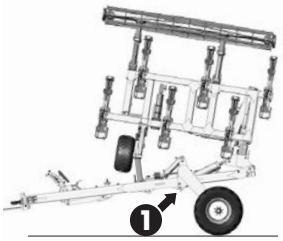

⚠ NEVER UNFOLD WINGS WITHOUT FULLY EXTENDING WHEEL CYLINDERS!

⚠ **IMPORTANT -** If the **Transport Cylinder** starts to extend *before* the **Wing Cylinders**, **STOP** the unfolding process and consult the troubleshooting section.

C. Extend wing cylinders (#3) to unfold.

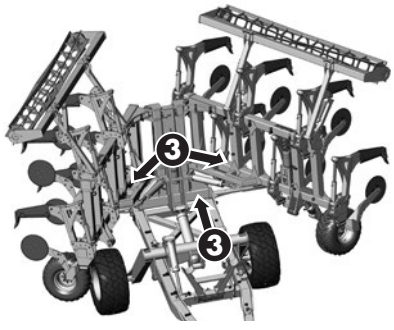

D. Continue extending the wing cylinders (#3) circuit and the transport cylinder will automatically extend in sequence.

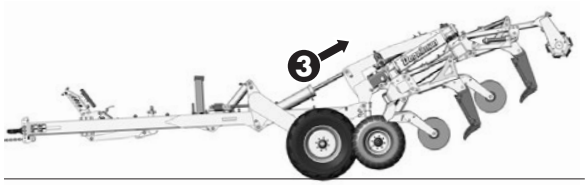

E. For best results, keep machine level. Activate wing remote (#3) in ***constant pressure*** while machine is working in field.

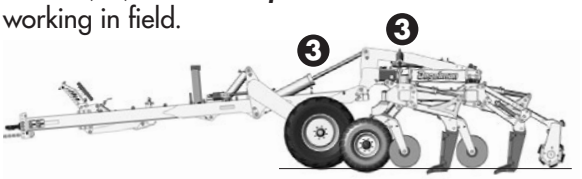



F. **IMPORTANT:** *(If hydraulic shank equipped.)* Shank Cylinders (#2): During operation, the shank circuit hydraulics need to be engaged **constantly** from the tractor, in the extended direction.

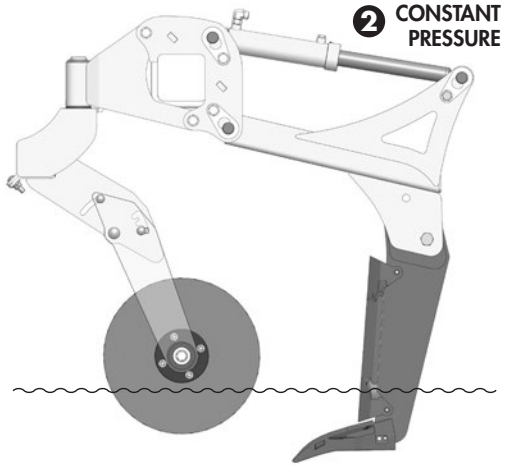

Field to Transport Position Overview

FIELD TO TRANSPORT POSITION

⚠ **DANGER: CRUSHING HAZARD can cause serious injury or death.** *Ensure area is clear of bystanders before performing fold/unfold operation.*



FOLLOW PROCEDURE BELOW:

IMPORTANT: The HDSR model shown may differ, but the general procedure remains the same.



A. Fully extend the Wheel Cylinders (#1) to completely raise the **frame**.

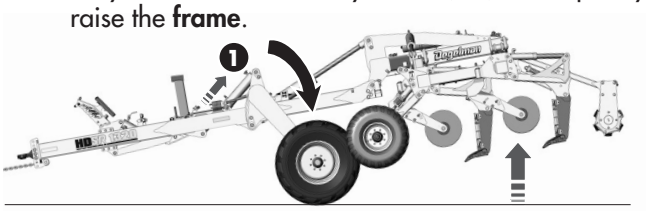

⚠ NEVER FOLD WINGS WITHOUT FULLY EXTENDING WHEEL CYLINDERS!

⚠ **IMPORTANT -** If the **Wing Cylinders** start to retract *before* the **Transport Cylinders**, **STOP** the unfolding process and consult the troubleshooting section.

B. Retract the Transport Cylinders (#3), fully raising the **complete rear section** (center & both wing sections).

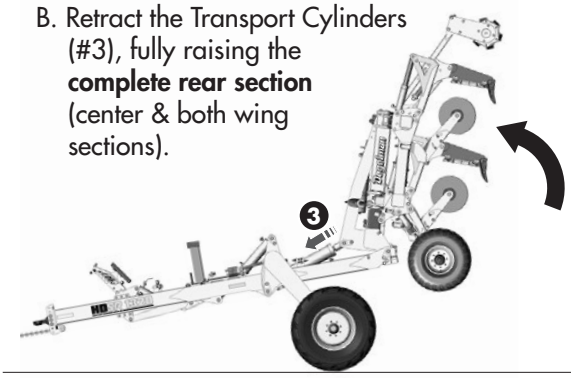

C. Continue retracting the Transport Cylinder (#3) circuit and the wings will automatically fold inward in sequence.

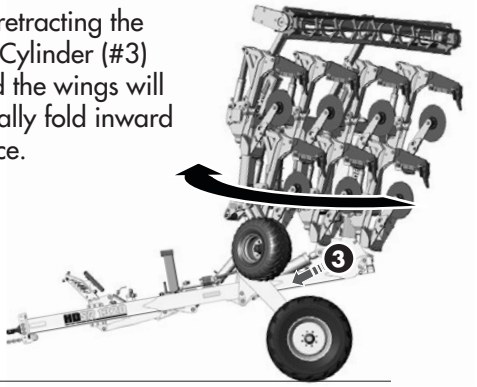

D. Continue to hold the Transport Cylinder (#3) circuit in the retracted position and also activate the Wheel Cylinders (#1) until the wing rollers are lowered into the wing transport carriers.

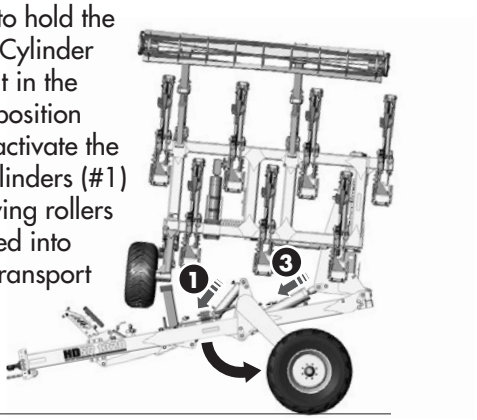

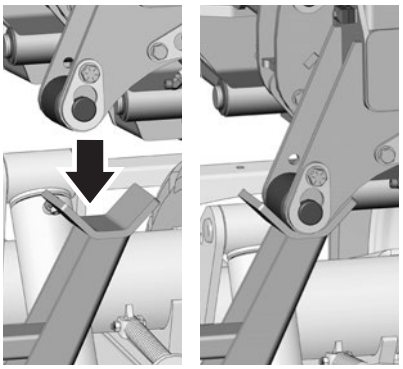

OPERATING SAFETY

1. Read and understand the Operator's Manual and all safety signs before using.
2. Stop tractor engine, set park brake, remove ignition key and wait for all moving parts to stop before servicing, adjusting, repairing or unplugging.
3. Keep hands, feet, hair and clothing away from all moving and/or rotating parts.



4. Do not allow riders on the HDSR during operation or transporting.
5. Keep all shields and guards in place when operating (if applicable).
6. Clear the area of all bystanders, especially children, before starting.
7. Do not operate machine on overly steep side hills or slopes.
8. Be careful when working around or maintaining a high-pressure hydraulic system. Ensure all components are tight and in good repair before starting.

BREAK-IN

Although there are no operational restrictions on the HDSR when it is new, there are some checks that should be done when using the machine for the first time, follow this procedure:

⚠ **IMPORTANT:** *It is important to follow the Break-In procedures especially those listed in the "Before using" section below to avoid damage:*

A. Before using:

1. Read Safety Info. & Operator's Manual.
2. Complete steps in "Pre-Operation Checklist".
3. Lubricate all grease points.
4. Check all bolt tightness.
5. Adjust Ripping Depth as outlined in the "Setting Ripping Depth" section.

B. After operating for 2 hours:

1. Check all hardware. Tighten as required.
2. Re-torque all shank mount bolts to **600 ft·lb** ***(813 N·M)***.
3. Check all hydraulic system connections. Tighten if any are leaking.

PRE-OPERATION CHECKLIST

It is important for both personal safety and maintaining good operational condition of the machine that the pre-operational checklist be followed.

Before operating the machine and each time thereafter, the following areas should be checked off:

1. Lubricate the machine per the schedule outlined in the "Maintenance Section".
2. Use only a tractor with adequate power to pull the HDSR under ordinary operating conditions.

   NOTE: *It is important to pin the drawbar in the central location only.*
3. Ensure that the machine is properly attached to the tractor using a clevis hitch, safety chain and a drawbar pin with provisions for a mechanical retainer. Make sure that a retainer such as a Klik pin is installed.

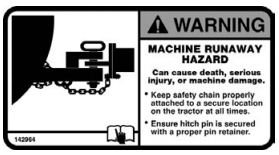

⚠ **WARNING:** ***Negative Hitch Weight*** *may occur when raising or lowering the rear sections. If the unit is not properly attached to the tractor with a clevis hitch and safety chain, the negative hitch weight could result in the hitch pole to suddenly raise and the rear sections to come crashing down.*





4. Before using, inflate tires to:

   Gauge Wheel Tires:
   400/60-15.5: **45 PSI** (310 kPa)

   Center/Transport Tires:
   389 AGRIFLEX+: 500/60 R22.5: **45 PSI** (310 kPa)
5. Check oil level in the tractor hydraulic reservoir. Top up as required.
6. Inspect all hydraulic lines, hoses, fittings and couplers for tightness. Tighten if there are leaks. Use a clean cloth to wipe any accumulated dirt from the couplers before connecting to the tractor's hydraulic system.
7. Inspect the condition/wear of the ripping shanks, points, and shank savers. If needed or desired, adjust the Ripping Depth as outlined in the adjustments section. If excessive wear is evident, replacement may be required. Refer to maintenance section.

OPERATING GUIDELINES

1. If equipped, place the Shank/Roller Cylinders (#2) into CONSTANT PRESSURE position. Check gauge for correct pressure. Adjust shank circuit flow down to 20-30% to reduce heat build-up.

2. Place the Wing Cylinders (#3) into CONSTANT PRESSURE position before operation.

   ⚠ **IMPORTANT:** *The Wing Cylinders* **MUST** *be in the* ***CONSTANT PRESSURE*** *position for the HDSR to remain level in working position.*

   ⚠ **IMPORTANT:** *Operator* **must** *read and understand the tractor manual in order to place the required hydraulic circuits into* ***constant pressure position,*** *in the correct direction. Adjust wing circuit flow down to 20-30% to reduce heat build-up.*

3. **IDEAL OPERATING SPEED** is 2-5 mph for optimal hardpan fracturing.
   Minimum operating speed is 2 mph.
   Maximum operating speed is 6 mph.

4. Tight turns are ***not recommended*** with the shanks engaged. When making headland turns, the operator should raise the ripping shanks fully out of the ground by activating Wheel cylinders (#1).

   Note: It is recommended to lift on headland turns and skip every second pass.

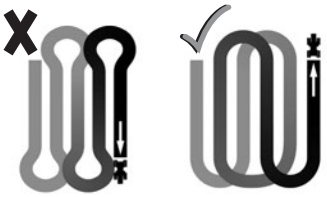

5. Each time you start a new field you may want to adjust the ripping depth depending on the compaction level. The operator can adjust the ripping depth by raising/lowering the ripping shanks by following the guidelines in the "Setting Ripping Depth" section.

6. Compaction depth for a given field can be checked using the included probe. Set ripping depth for 1-2" below compaction.

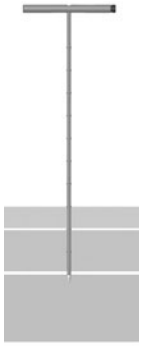

7. After making adjustments to the ripping depth it is recommended to bring the HDSR up to speed (2-5mph) to test the depth setting by driving about 100m. Stop, check depth and re-adjust the height higher or lower, if needed, based on your preference.

   Remember: **Removing** a depth stop lowers ripping depth 1" deeper. **Adding** a depth stop raises shanks up 1" shallower.

8. Extremely hard, packed soil may require additional passes to reach the desired ripping depth. If the tractor is underpowered, do a shallower pass of the field first, then a deeper second pass.

SPECIFICATION OVERVIEW

HDSR 1130/1520*

Model:	**HDSR 1130**	**HDSR 1520**
Working Width	27'-6"	25'-0"
Transport Height *(w/o chopper)*	12'-1"	12'-1"
Transport Height *(with chopper)*	13'- 11"	13'- 11"
Transport Width	11'-11"	11'-11"
Transport Length	20'-0"	20'-0"
Field Length *(w/o chopper)*	27'-8"	27'-8"
Field Length *(with chopper)*	29'-5"	29'-5"
Outside Wheel Track	10'-8"	10'-8"
Weight *(w/o chopper)*	20,000 lbs.	22,500lbs.
Weight *(with chopper)*	22,500 lbs.	25,000 lbs.
Hitch Weight *(w/o chopper)*	4,000 lbs.	4,600 lbs.
Hitch Weight *(with chopper)*	4,600 lbs.	5,100 lbs.
Number of Shanks	11	15
Shank Spacing	30"	20"
Under Frame Clearance	44"	44"
Ripping Depth	6" to 24"	6" to 24"

Estimated Point Load:

Spring Trip	2,800 lbs.
Hydraulic Trip	2,500 to 4,500 lbs.
Shear Bolt	9,000 lbs.

Horsepower Requirements:
(HP values will vary with soil type and shank/point selection.)

Working Depth:	**14" *or less***	
(5 MPH / 7" winged points)	**HDSR 1130**	**HDSR 1520**
40 HP per Shank	440 HP	600 HP
45 HP per Shank	495 HP	675 HP
Working Depth:	**14" or more**	
(5 MPH / 7" winged points)	**HDSR 1130**	**HDSR 1520**
45 HP per Shank	495 HP	675 HP
50 HP per Shank	550HP	750 HP

**Values shown were current at time of first publishing.*

HYDRAULIC TRIP

The hydraulic trip system on the HDSR is optimized to push the largest amount of fluid to the accumulators as fast as possible for a responsive trip. **In order for it to function correctly, the 3 branch isolation ball valves on the accumulator manifolds must be in the ON position while working.** *(Refer to pg.21 for branch isolation valve locations.)* Run shank circuit (2) in constant pressure and examine the pressure gauge on the shank pressure valve to ensure the system is operating at 2100 to 2200 psi. This valve may be adjusted slightly depending on soil conditions and ambient temperature using a wrench to loosen jam nut and allen key.

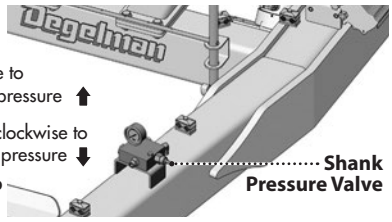

The ideal shank circuit pressure is one that keeps the shanks in the ground so they are not constantly tripping up, but one that still allows the shank to trip if an obstacle is encountered.

If shank trip pressure is changed by adjusting to lower than 2000 psi, it is necessary to also have the accumulator Nitrogen pre-charge adjusted to 90% of the desired system pressure to ensure a responsive shank trip.

IMPORTANT: *Check gauge pressure before every use.* ***Never*** *run system* ***higher than 2800 psi****. If system is running higher than 2800 psi, stop and diagnose the issue.*

System Pressure (psi)	Accumulator Pre-charge (psi)	Point Load (lbs.)
1300	1170	2559
1400	1260	2694
1500	1350	2829
1600	1440	2965
1700	1530	3100
1800	1620	3235
1900	1710	3371
2000	1800	3506
2100	1890	3641
2200	1980	3777
2300	2070	3912
2400	2160	4047
2500	2250	4182
2600	2340	4318
2700	2430	4453
2800	2520	4588

SPRING TRIP

⚠ **DANGER:** *Impact from sudden release of spring trip can cause serious injury or death.*

Spring trip contains a huge amount of stored mechanical power. If for some reason the spring trip assembly remains stuck in the up *(tripped)* position, STAY CLEAR! ***Do not*** attempt to manually reset and ***do not*** attempt to service without Degelman support.

Contact your dealer or Degelman Service immediately at: **(800) 667-3545**

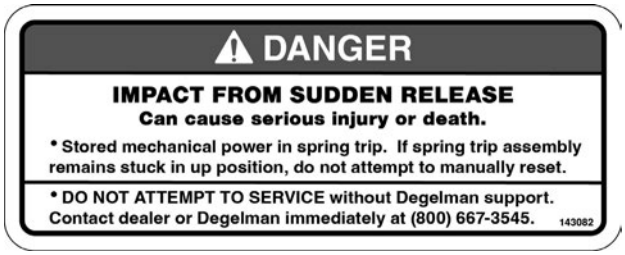

The spring trip force is ***not adjustable***. It provides an estimated 2,800 lbs. of trip force at the point.

HYDRAULIC CHOPPER ROLLER *(If equipped)*

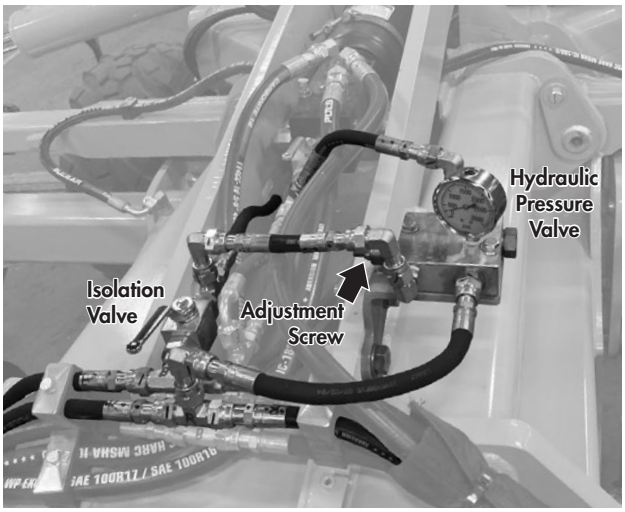

NOTE: The Hydraulic Chopper Roller pressure valve is **Factory Set to 450 psi** but may be adjusted slightly depending on soil conditions using a wrench to loosen jam nut and allen key.

- **Turn screw**: ⬆ Clockwise to increase pressure
  ⬇ Counter-clockwise to decrease pressure
- **Do not exceed 1000 psi** or chopper rollers may hold up the rear of the machine resulting in inconsistent ripping depth.
- Isolation valve may be used to lock up the chopper rollers, if desired, in wet or other challenging conditions.

SHANK SELECTION

1-1/4" Parabolic Shanks - suitable for operations who want maximum compaction shattering and a high amount of soil mixing between soil horizons. Parabolic shanks will result in highly disturbed surface finish with a deep soil furrow.

1-1/4" Straight Shanks - suitable for operations who want maximum compaction shattering but do not want as much mixing between soil horizons. 1-1/4" straight shanks are well suited to extremely rocky ground and leave less furrow and a smoother field finish than parabolic shanks.

3/4" Min Till Shanks - suitable for minimum tillage operations that want the least amount of surface disturbance possible while effectively shattering subsoil compaction.

POINT SELECTION

All Degelman HDSR points are designed to fracture compacted soil when operated at a depth of 6" to 24" deep. The point of the ripper shank should ideally be ran 1" to 2" below the compacted layer which can be found using the included soil probe and is generally around 8 - 14" deep in most soils. Running deeper than 2" under the compacted soil layer results in excessive fuel consumption and increased point wear.

Narrower 2" to 5" ripper points will pull easier through the soil requiring less draft and horsepower from the tractor while providing adequate compaction shattering. They will also generally provide a less disturbed surface finish if minimum tillage is your goal.

Larger 7" to 10" winged ripper points will provide the maximum amount of compaction shattering, but will require more horsepower from the tractor and increased fuel consumption.

Single-piece cast points are well suited to sandy/abrasive soils with few rocks as they have superior wear life.

Fabricated/welded points are better suited to less abrasive soils with many rocks as they have superior impact durability.

RIPPING DEPTH

In order to achieve optimum deep tillage performance and the correct adjustments to the HDSR, you first need to know how deep the compaction is in the field. This can be achieved using the included compaction depth probe located on the front hitch of the machine near the transport roller carriers.

To check compaction depth using included soil probe:

1. Undo the retaining latch holding the probe to the machine and remove the compaction depth probe.
2. For extremely soft, sandy soils, a larger probe point is included in the threaded cap on the handle to aid in finding compaction. For most other soils, use the attached smaller point.

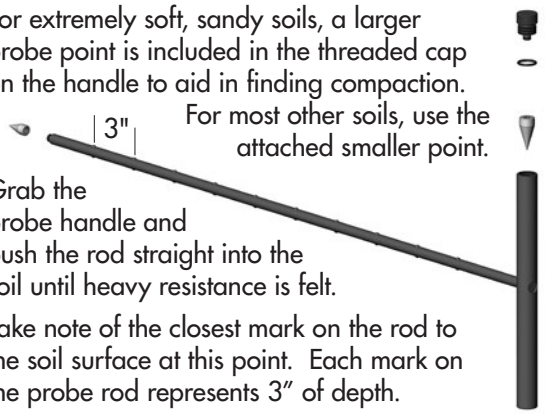

3. Grab the probe handle and push the rod straight into the soil until heavy resistance is felt.
4. Take note of the closest mark on the rod to the soil surface at this point. Each mark on the probe rod represents 3" of depth.
5. It may be desirable to take several compaction depth readings in different high traffic areas of the field and set the machine at the deepest level of compaction encountered.

For example, if you press the probe into the soil and note that the 3rd weld mark on the rod is around the surface level of the soil, you know that the compaction hard pan layer is 9" deep *(3" x 3 marks)*. You want to set the ripping depth for 1 to 2" deeper than the hard pan so for this example you would set the ripping depth to 11". After setting the machine and making a pass, probe the dirt again to ensure the compaction is being broken up.

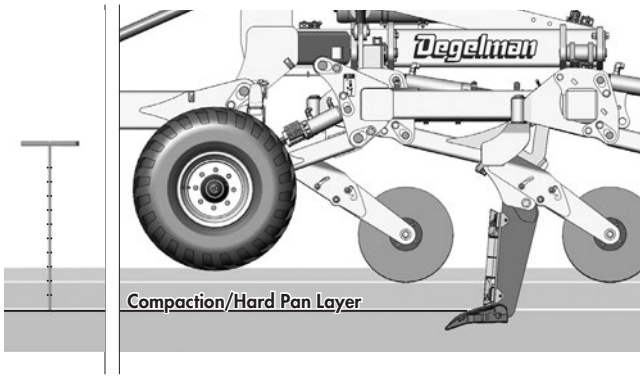

SETTING RIPPING DEPTH

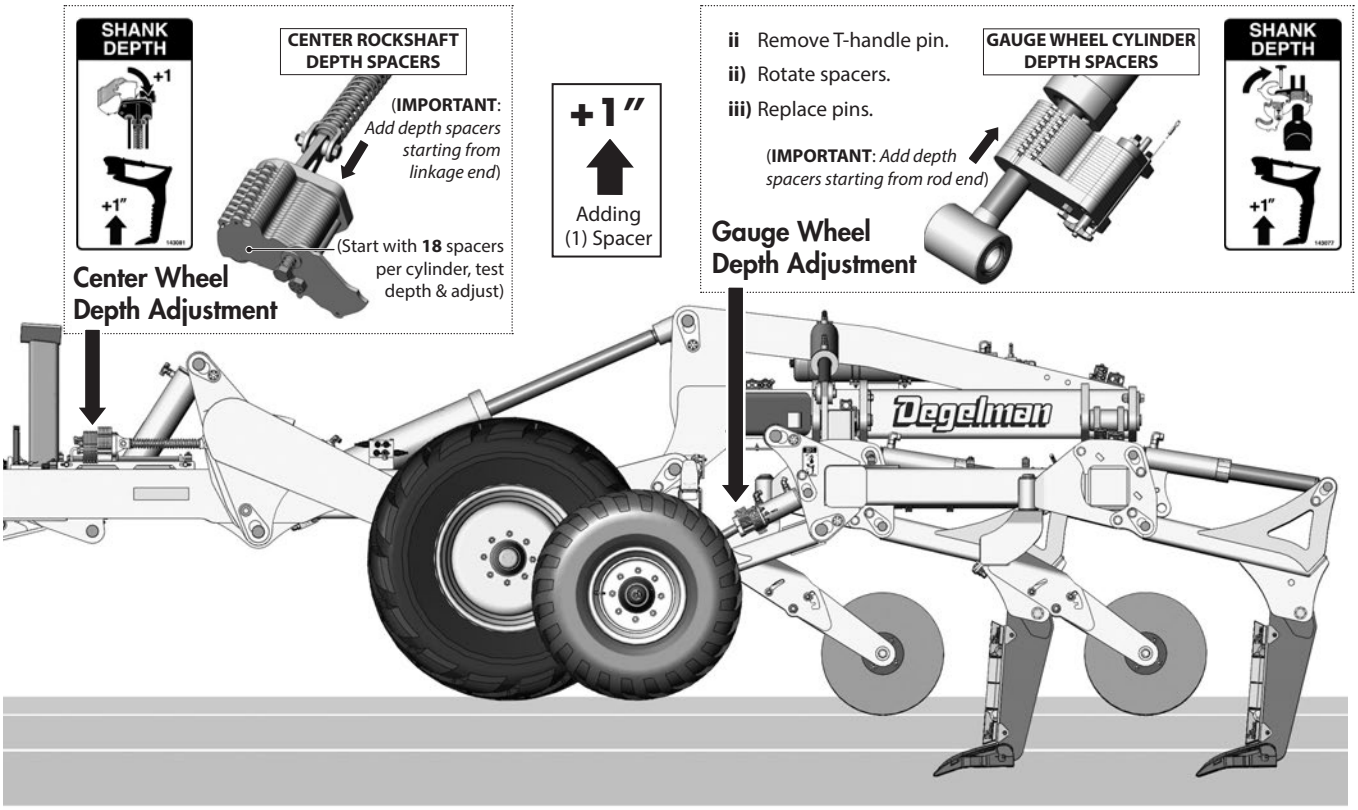

RIPPING DEPTH SETTING OVERVIEW

Adjusting the ripping depth of the shanks is accomplished by adding or removing a number of spacers from **3 locations**.

The spacers *(depth stops, shims)* limit the stroke distance of the cylinders, changing the amount that the ripper shanks are lowered.

Each spacer that is added to the cylinders raises the frame height by 1". Therefore, to lower the shanks deeper into the soil, you would remove *one* spacer for *each* 1" of depth change required.

A typical recommended penetration depth of **1 to 2"** below compaction is suggested. This depth, however, can be adjusted to the operators needs and preferences or based on different crop varieties and soil conditions.

NOTE: *As the shank points wear with usage, the ripping depth settings will also need to be adjusted accordingly.*

⚠ **IMPORTANT:** *Changes to the center depth shim adjustment should only be performed with the wheel circuit fully extended. If shims are flipped down onto the depth control valve without the wheel circuit fully extended, damage to the shims may result.*

Use the following as a guideline for setting depth:

1. Drive HDSR onto level ground. For initial setup, try "*all 18 Spacers*" on each cylinder stop.
2. Fully retract the Wheel (#1) cylinders to lower shanks into the ground while pulling ahead. Place transport and shank circuits *(if equipped)* into constant pressure.
3. Check the penetration depth of the shanks. Take note of how much you would like to raise or lower both the ripping shanks - round to the nearest 1".
4. Fully raise the frame while pulling the machine ahead by extending the Wheel (#1) cylinders.
5. Adjust ripping height at the **center wheel** and **2 gauge wheel** cylinder positions *(LH/RH wings)*.

   To Lower Shanks - ***Remove*** one spacer for each **1"** you want to **Lower** it.

   To Raise Shanks - ***Add*** one spacer for each **1"** you want to **Raise** it.
6. Repeat above procedure until proper depth is achieved.

WING FRAME ADJUSTMENT

In some soil conditions, it may be necessary to add or remove spacers from the gauge wheel cylinders independently from the center wheel adjustment, in order to level the wings when viewed from the rear. This is due to the fact that in softer soils the gauge wheels will run deeper than in harder soils.

- Adding spacers to the Gauge Wheel Cylinders:
  - Raises the outer wing
- Removing spacers from the Gauge Wheel Cylinders:
  - Lowers the outer wing

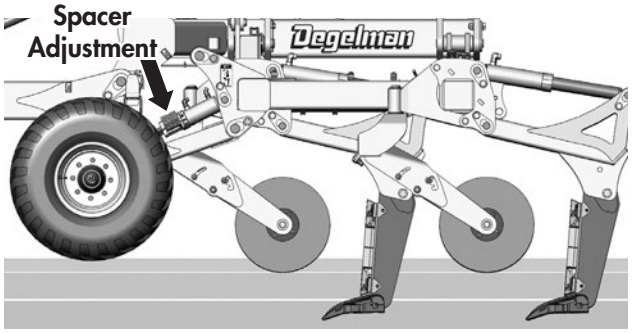

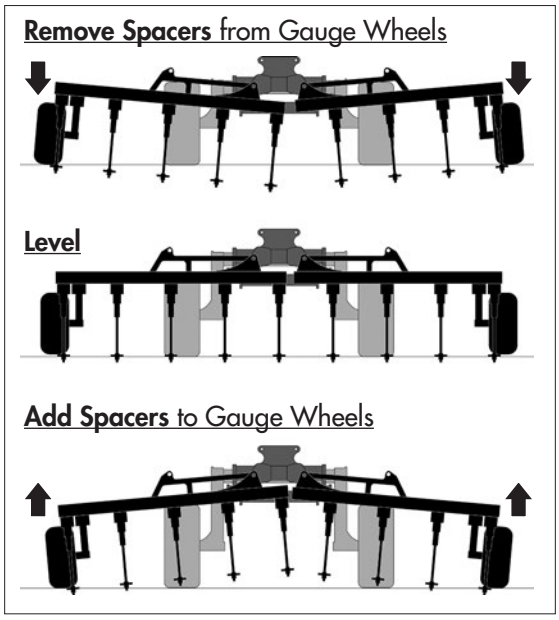

COULTER HEIGHT ADJUSTMENT *(If equipped)*

The 20″ coulter discs cut surface residue ahead of the shank and reduce implement draft. The coulter disc arms utilize a rubber torsion suspension system which provides a maintenance free and spring free coulter trip design. The coulter mount also casters for corners to reduce mechanical stress. The vertical depth can be adjusted with a high, middle, and low position to adjust to field conditions and soil type.

IMPORTANT: A recommended depth of 2 to 4" is suggested during operation. In rocky soil, a shallower depth is recommended.

⚠ **CAUTION:** *If coulter depth setting is set too deep, bearing damage and accelerated wear may occur.*

Adjustment for height is accomplished by loosening the pivot and slot bolts, adjusting to the desired height, and re-tightening.

Adjust Coulter Depth Based on Expected Ripping Depth

Typically the deeper the ripping depth, the higher the coulters are raised up. Refer to reference ranges below:

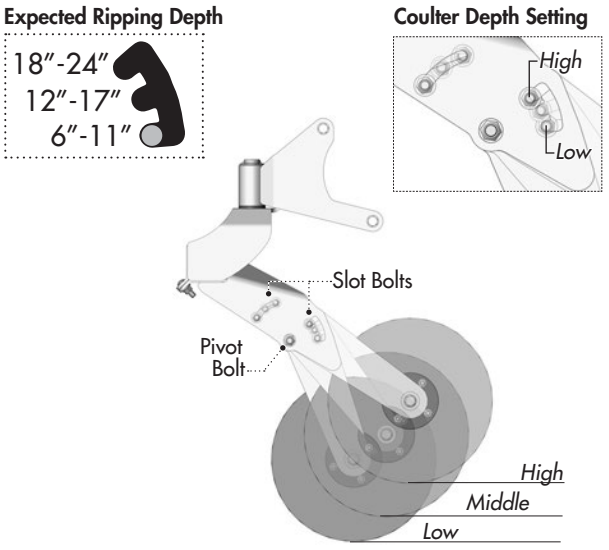

- Loosen all 3 bolts *(Pivot & Slot)* with provided wrench.
- Move bolt to notch for ***expected ripping depth***.
- Re-tighten all 3 bolts. *(Repeat for all coulter arms.)*

Troubleshooting - HDSR

GENERAL TROUBLESHOOTING

In the following section, we have listed some of the problems and solutions that you may encounter. If you encounter a problem that is difficult to solve, even after having read through this troubleshooting section, please call your local dealer or distributor.

Residue hanging up on shanks/plugging:
• Ensure coulter discs are adjusted correctly *(if equipped)*.
• Adjust GPS guidance to run shanks between planter rows if working parallel.
• Replace shank shin savers if worn.
• Increase operating speed slightly.
• Wait for soil conditions to dry out more.

Front and rear shank rows not running at same depth:
• Ensure transport/wing circuit is in constant pressure in the extended direction.
• Ensure wing is level when viewed from the side while shanks are working in the ground.
• Ensure hitch height has been calibrated for the connected tractor drawbar. Adjust wing pitch by adjusting hitch clevis height if necessary.
• Contact Degelman Service if issues persist as transport cylinders have threaded adjustment in case issue cannot be resolved with steps above.

Wing end shanks ripping deeper or shallower than the center:
• Wing is not level when viewed from the rear in working position. Add or remove spacers from gauge wheels.
• Ensure transport/wing circuit is in constant pressure in extended direction.
• Ensure the number of spacers on the gauge wheel cylinders matches the number of spacers used on the center rockshaft depth carriage.
• In certain soil conditions, it may be necessary to add or remove depth shims from the gauge wheel cylinders differently from the center rockshaft depth carriage to attain level wings.
• Adjust bolted connection in slots for poppet valve depth carriage if necessary.

Not unfolding to field position or folding to transport position:
• Ensure hydraulic coupler has not disengaged or try a different tractor hydraulic port for the #3 wing circuit.
• Check for hose or fitting leaks.
• Tractor hydraulic system should have 2800 psi.
• Hydraulic fluid bypassing piston seals in one or more cylinders *(Replace cylinder or re-build with new seals)*.
• Inspect roller lock valve on rockshaft for proper operation. Wings will not fold/unfold unless lock valve is pushed in by cam plate when wheel cylinders on the rockshaft are fully extended.
• Excessive mud build up on frame & chopper rollers. Clear frame and chopper rollers of excess weight from mud build up.

Tractor oil temperature is too high:
• Lower the flow on the shank/roller and transport/wing circuit hydraulic remotes *(Please refer to the Tractor's Operator Manual)*.

Leaving a larger than spacing gap or overlapping passes:
• Adjust tractor GPS settings for toolbar width.
• Adjust tractor GPS settings for overlap.

Troubleshooting - HDSR

Ripper shanks not tripping/breaking excessive number of shear bolts:
• Ripper shanks may not visibly trip if the field is clear of stones or other obstacles.
• If equipped with hydraulic trip, ensure the three accumulator isolation ball valves are in the ON position.
• Lower operating speed slightly. Higher speeds increase draft force on the shanks and stress on the shank trip shear bolts.
• If equipped with hydraulic trip, lower trip force by adjusting shank pressure valve. If pressure needs to be reduced below 1800psi, have your local dealer lower accumulator Nitrogen precharge also on all 3 accumulators *(See accumulator maintenance section).*
• Ensure pressure on shank pressure valve is not excessively high *(greater than 2800psi).* This could indicate an uncoupled return hose to the tractor or a faulty pressure valve.
• In extremely hard soil conditions it is unlikely to achieve depths exceeding 18" in one pass. Consider doing a shallower pass first, followed by a second deeper pass

Ripper shanks tripping excessively/not staying in the ground:
• Lower operating speed slightly. Higher speeds increase draft force which could exceed trip force.
• If equipped with hydraulic trip, increase trip force by adjusting shank pressure valve. If pressure needs to be increased above 2200psi, have your local dealer increase accumulator Nitrogen precharge pressure on all 3 accumulators *(See accumulator maintenance section).*
• Ensure shank pressure valve is operational by investigating the pressure gauge with the circuit engaged.
• If certain shanks are not staying in the ground, it is possible that there is air in the shank circuit. *(See "Bleeding Shank Circuit" in the maintenance section).*

Machine not effectively shattering subsoil compaction:
• Increase operating speed slightly.
• Switch points on machine to points with larger wings.
• Wait for drier soil conditions. Drier conditions are more conducive to fracturing the hard pan.

Machine is leaving too much surface disturbance:
• For operations requiring a minimum tillage surface finish, ensure that the machine is equipped with ¾" minimum tillage shanks and the correct minimum tillage shank shin savers and points.
• Switch points on machine to points with narrower or no wings.
• Lower operating speed slightly.
• Adjust depth shims for deeper ripping to avoid surface blowout.
• Ensure coulter discs are adjusted to the correct depth and tracking straight in front of shank. Correct coulter depth opens the trench ahead of the shank to prevent furrow blowout.
• Wait for higher moisture conditions on the surface of the soil.

Center of machine going too deep/depth control poppet not pushing in when lowering into the ground:
• Ensure depth shim carriage bushings/rods are clean of dirt & debris and that depth shim carriage slides freely on the rods by hand with spring linkage disconnected.
• Turn down hydraulic flow on (1) Wheel Circuit to 40-60%.
• Ensure depth control poppet valve, depth carriage bushings, & carriage rods are in good repair & operational. Replace worn components.
• If machine is stored for extended periods of time in transport position with all depth stops flipped down, the spring on the rockshaft linkage may set in and lose force. Replace spring on spring linkage if necessary. If storing for extended periods of time, always store machine in transport position with all shims flipped up.

MAINTENANCE SAFETY

1. Review the Operator's Manual and all safety items before working with, maintaining or operating the HDSR.
2. Stop the tractor engine, set park brake, remove ignition key and wait for all moving parts to stop before servicing, adjusting, repairing or unplugging.
3. Keep hands, feet, clothing and hair away from all moving and/or rotating parts.
4. Clear the area of bystanders, especially children, when carrying out any maintenance and repairs or making any adjustments.



5. Place safety stands or large blocks under the frame before removing tires or working beneath the machine.
6. Be careful when working around or maintaining a high-pressure hydraulic system. Wear proper eye and hand protection when searching for a high pressure hydraulic leak. Use a piece of wood or cardboard as a backstop when searching for a pin hole leak in a hose or a fitting.
7. Always relieve pressure before disconnecting or working on hydraulic system.
8. Never disconnect HDSR from tractor if rear sections of machine are partially raised. See warning below:





⚠ **WARNING/DANGER:** ***Never*** *disconnect HDSR from tractor if rear sections of machine are partially raised.* ***Negative Hitch Weight*** *may result, the hitch pole may suddenly raise and the rear section would come crashing down. Only disconnect when unit is on level ground in the proper transport or field position.*



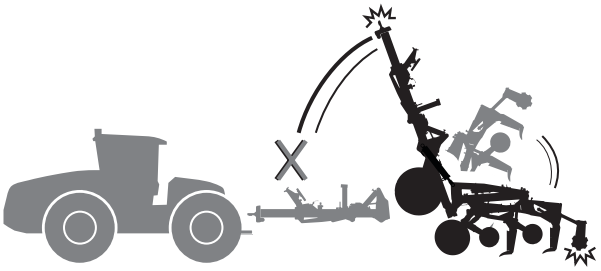

MAINTENANCE CHECKLIST

After reviewing the Maintenance / Hydraulic Safety Information, use the Maintenance Checklist provided for regular service intervals and keep a record of all scheduled maintenance:

(***Initial Break-In Review.***)

A. Before using:
1. Read Safety Info. & Operator's Manual.
2. Complete "Pre-Operation Checklist"
3. Check all Bolt Tightness.
4. Adjust Shank Ripping Depth as outlined in the "Setting Ripping Depth" section.

B. After operating for **2 hours**:
1. Check all hardware. Tighten as required.
2. Check all hydraulic system connections. Tighten if any are leaking.

Maintenance Check - 10 Hours

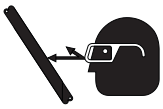

- Check for worn or damaged parts
- Hydraulic fluid leaks
- Damaged hoses



- Check tire pressure:
  Center/Transport Tires: 500/60 R22.5: **45 PSI (310 kPa)**
  Gauge Wheel Tires: 400/60-15.5: **45 PSI (310 kPa)**

Grease Points - 25 Hours

- Wing frame pins ***(4)*** & Wing cylinder pins ***(4)***
  (Refer to grease locations in parts section.)
- Spring trip shank pins & side plates - *(if equipped)*
  (Refer to grease locations in parts section.)

Grease Points - 50 Hours



- Parking Jack pins ***(4)***
  (Refer to grease locations in parts section.)
- Grease hubs & spindles
- Working points & pins
- Safety signs clean

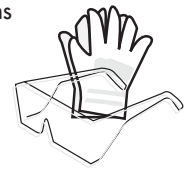

Annually

- Bolt tightness
- Repack wheel bearings
- Shank mount bolt torque: **600 lb·ft** *(813 N·m)*

⚠ **IMPORTANT:** *Safely secure HDSR in winged forward transport position when changing or servicing points or shank savers.*



HARDWARE SPECIFICATIONS

Note: Unless stated otherwise, hardware is typically:
Hex, Plated GR5 UNC or P8.8 (metric)

TORQUE SPECIFICATIONS

TORQUE

Checking Bolt Torque

The tables below give correct torque values for various bolts and capscrews. Tighten all bolts to the torques specified in chart unless otherwise noted. Check the tightness of bolts periodically, using these bolt torque charts as a guide. Replace hardware with the same strength (Grade/Class) bolt.

IMPERIAL TORQUE SPECIFICATIONS

(Coarse Thread - based on "Zinc Plated" values)



Size	Grade 5	Grade 8
	lb.ft (*N.m*)	lb.ft (*N.m*)
1/4"	**7 (*10*)**	**10 (*14*)**
5/16"	15 (*20*)	20 (*28*)
3/8"	**25 (*35*)**	**35 (*50*)**
7/16"	40 (*55*)	60 (*80*)
1/2"	**65 (*90*)**	**90 (*120*)**
9/16"	90 (*125*)	130 (*175*)
5/8"	**130 (*175*)**	**180 (*245*)**
3/4"	230 (*310*)	320 (*435*)
7/8"	**365 (*495*)**	**515 (*700*)**
1"	550 (*745*)	770 (*1050*)
1-1/8"	**675 (*915*)**	**1095 (*1485*)**
1-1/4"	950 (*1290*)	1545 (*2095*)
1-3/8"	**1250 (*1695*)**	**2025 (*2745*)**
1-1/2"	1650 (*2245*)	2690 (*3645*)

METRIC TORQUE SPECIFICATIONS

(Coarse Thread - based on "Zinc Plated" values)



Size	Class 8.8	Class 10.9
	lb.ft (*N.m*)	lb.ft (*N.m*)
M6	**7 (*10*)**	**10 (*14*)**
M8	16 (*22*)	23 (*31*)
M10	**30 (*42*)**	**45 (*60*)**
M12	55 (*75*)	80 (*108*)
M14	**90 (*120*)**	**125 (*170*)**
M16	135 (*185*)	195 (*265*)
M18	**190 (*255*)**	**270 (*365*)**
M20	265 (*360*)	380 (*515*)
M22	**365 (*495*)**	**520 (*705*)**
M24	460 (*625*)	660 (*895*)
M27	**675 (*915*)**	**970 (*1315*)**
M30	915 (*1240*)	1310 (*1780*)
M33	**1250 (*1695*)**	**1785 (*2420*)**
M36	1600 (*2175*)	2290 (*3110*)

HYDRAULIC SAFETY

- Make sure that all components in the hydraulic system are kept in good condition and are clean.
- Properly bleed Shank Circuit before servicing. Refer to the *"Shank Hyd Circuit Service"* section.
- Replace any worn, cut, abraded, flattened or crimped hoses and metal lines.
- Do not attempt any makeshift repairs to the hydraulic lines, fittings or hoses by using tape, clamps or cements. The hydraulic system operates under extremely high-pressure. Such repairs will fail suddenly and create a hazardous and unsafe condition.
- Wear proper hand and eye protection when searching for a high-pressure hydraulic leak. Use a piece of wood or cardboard as a backstop instead of hands to isolate and identify a leak.



- If injured by a concentrated high-pressure stream of hydraulic fluid, seek medical attention immediately. Serious infection or toxic reaction can develop from hydraulic fluid piercing the skin surface.
- Before applying pressure to the system, make sure all components are tight and that lines, hoses and couplings are not damaged.

HYDRAULIC HOSE SPECIFICATIONS

Note: Unless otherwise stated, Hydraulic Hoses are either 3/8 or 5/8 with ORF female swivel ends.

HYDRAULIC HOSE INSTALLATION TIPS

The following tips are to help you identify some possible problem areas in the installation of hydraulic hoses.

1. Installation should be completed in a clean environment clear of dust and contaminants. Hoses and fittings should be capped if not installed.
2. Ensure hoses are not twisted during installation as this may weaken the hose. Also, the pressure in a twisted hose may loosen fittings or connections.
3. Allow sufficient bend radius in hoses when installing to prevent lines from collapsing and flow becoming restricted.
4. When installing hoses in an area of movement or flexing, allow enough free length for motion and to ensure fitting connections are not stressed.
5. Ensure hoses are properly clamped and secured in position after routing is complete to provide a cleaner installation and prevent possible damage or hazards.

HYDRAULIC FITTING INSTALLATION

The following info is to help you identify and properly install some of our standard hydraulic fittings.

SAE (JIC) 37° Flare

JIC fittings - Metal-to-metal sealing type fittings featuring a 37° flare (angle of sealing surface) and straight UNF (Unified National Fine) Threads.

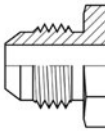

(Lubricated Values) Dash	Thread Size	Torque - lb.ft (*N.m*)	
-4	7/16 - 20	9-12	(12-16)
-6	9/16 - 18	14-20	(*19-27*)
-8	3/4 - 16	27-39	(*37-53*)
-10	7/8 - 14	36-63	(*50-85*)
-12	1-1/16 - 12	65-88	(*90-119*)

Tightening JIC 37° Flare Type Fittings

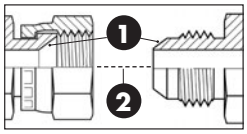

1. Check flare and flare seat for defects that might cause leakage.
2. Align fittings before tightening. Lubricate connections & hand tighten swivel nut until snug.
3. Using two wrenches, torque to values shown in table.

Alternate Installation Method

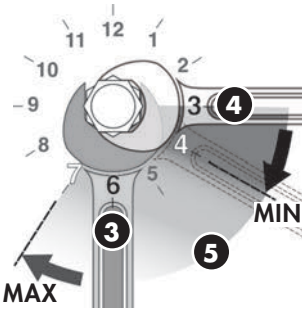

3. Using two wrenches. Place one wrench on the fixed connector body at a clock position of **6** o'clock.
4. Place the second wrench on the second connection as close to the **3** o'clock position as possible.
5. Tighten by rotating the second connection firmly to at least the **4** o'clock position, but no more than the **7** o'clock position. Typically, the larger the fitting size the less rotation required.

ORFS (O-Ring Face Seal)

ORFS fittings use an O-ring compression method to seal. This method offers a high level of sealing along with good vibration resistance. Male fittings include an O-ring located in a groove on the flat face. Female fittings feature a flat face and UNF straight threaded swivel nut.

The **Torque** method is recommended for ORFS installation.

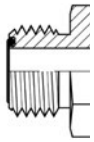

Dash	Thread Size	Torque - lb.ft (*N.m*)	
-4	9/16 - 18	18	(*25*)
-6	11/16 - 16	30	(*40*)
-8	13/16 - 16	40	(*55*)
-10	1 - 14	60	(*80*)
-12	1-3/16 - 12	85	(*115*)

Tightening ORFS (O-Ring Face Seal) Fittings

1. Inspect components and ensure the O-Ring seal is undamaged and properly installed in the groove of the face seal. Replacing the O-Ring may be necessary.
2. Align, thread into place and hand tighten.
3. Tighten to proper torque from the table shown above.

Note: A **DASH** size refers to a diameter of a hose (*inside*) or of a tube (*outside*) measured in 1/16″ increments.
For example, a ***Hose*** specified as *dash* **8** or **-8** would have an **inside** diameter of **8***/16″* or **1/2″**.
Alternatively, a ***Tube*** specified as *dash* **8** or **-8** would have an ***outside*** diameter of **8***/16″* or **1/2″**.

ORB (O-Ring Boss)

Male ORB fittings have straight UNF threads, a sealing face and an O-ring. The female fittings are generally found in the ports of machines and feature straight threads, a machined surface, and a chamfer to accept the O-ring. Sealing is achieved through the compression of the male O-ring against the chamfered sealing face of the female fitting.

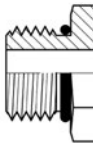

(Lubricated Values) Dash	Thread Size	Torque Non-Adjustable lb.ft (*N.m*)	Torque Adjustable lb.ft (*N.m*)
-4	7/16 - 20	30 (*40*)	15 (*20*)
-6	9/16 - 18	35 (*46*)	35 (*46*)
-8	3/4 - 16	60 (*80*)	60 (*80*)
-10	7/8 - 14	100 (*135*)	100 (*135*)
-12	1-1/16 - 12	135 (*185*)	135 (*185*)

Tightening ORB (O-Ring Boss) Fittings

Non-adjustable Port End Assembly

1. Inspect the components to ensure that male and female threads and sealing surfaces are free of nicks, burrs, scratches, or any foreign material.
2. Ensure O-Ring seal is properly installed and undamaged.
3. Lubricate threads and O-ring to help the O-ring slide past the port entrance corner and avoid damaging it.
4. Screw the fitting into position tighten to proper torque value from the table shown above.

Adjustable Port End Assembly

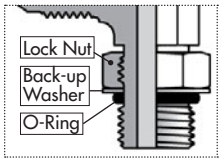

1. Inspect the components to ensure male & female threads and sealing surfaces are free of nicks, burrs, scratches, or any foreign material.
2. Ensure O-Ring seal is properly installed and undamaged.
3. Lubricate threads and O-ring to help the O-ring slide smoothly into the port and avoid damage.
4. Loosen back the lock nut as far as possible. Make sure back-up washer is not loose and is pushed up as far as possible.
5. Screw the fitting into port until the back-up washer or the retaining ring contacts face of the port. Light wrenching may be necessary. Over tightening may damage washer.
6. To align the end of the fitting to accept incoming tube or hose assembly, unscrew the fitting by the required amount, but not more than one full turn.
7. Using two wrenches, hold the fitting in desired position and tighten the locknut to the proper torque value from the table located above.
8. Inspect to ensure that O-ring is not pinched and that washer is seated flat on the face of the port.

SHEAR BOLTS

The shanks on every HDSR are equipped with backup redundant shear bolts to protect the machine from structural damage in the case an immovable object is encountered that exceeds the limits of the shank trip mechanism.

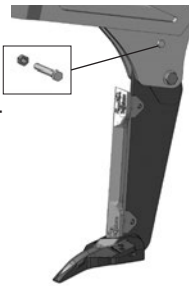

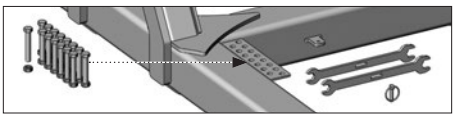

Wrenches and spare shear bolts are included on the wing frames of the HDSR to assist in replacing shear bolts if needed. The same wrenches are also used for coulter depth adjustment.

Replace these shear bolts with 5/8" x 4-1/4" UNC GR8 bolts only and torque to 180 ft.lbs.

Inspect shear bolt holes in the shank and shank holder. Severely distorted holes will reduce shear-bolt life and should be replaced.

CHANGING POINTS

⚠ **IMPORTANT:** *Do not replace wear parts with the HDSR in field position and wing raised. Hydraulic or mechanical failure can cause the wing to fall causing severe injury.*

The safest machine configuration to perform wear part maintenance is in transport position. Raised headland position is also acceptable for shank and coulter disc maintenance *if the machine has been blocked up securely*.

Periodically check the ripper shank points and shank savers for wear. Excessive point or shank saver wear can cause the shank itself to wear out and require replacement.



Changing wear points and shank savers on the HDSR can be achieved using a hammer/punch combo or pneumatic punch to push out the 1/2" roll pins securing the wear parts. The shank savers feature a reversible design allowing them to be flipped around for double the lifespan. Once the shank savers have been flipped, it is time to order a replacement set.

SPRING TRIP REPLACEMENT

⚠ **DANGER:** *Impact from sudden release of spring trip can cause serious injury or death.*

Spring trip contains a huge amount of stored mechanical power. If for some reason the spring trip assembly remains stuck in the up *(tripped)* position, STAY CLEAR! ***Do not*** attempt to manually reset and ***do not*** attempt to service without Degelman support.

Contact your dealer or Degelman Service immediately at: **(800) 667-3545**

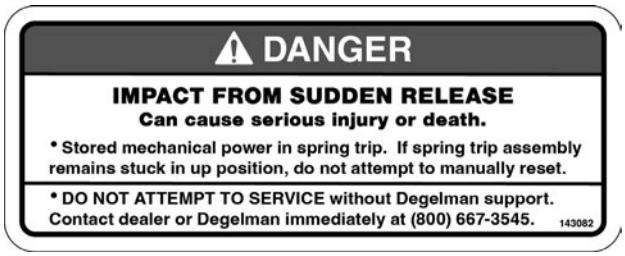

The spring trip force is *not adjustable*. It provides an estimated 2,800 lbs. of trip force at the point.

The spring trip assembly *must be replaced as a whole*. Individual replacement parts are not available as they are not designed to be serviced in the field. The spring trip assembly is pre-loaded from factory using specialized assembly techniques and assembly fixture.

⚠ DANGER

DO NOT REMOVE THE 1-1/4" BOLT FROM THE END CAP OF THE SPRING ASSEMBLY

Serious personal injury or even death could occur.

If a spring trip assembly is damaged and needs to be replaced, it can be removed whole from the shank by supporting the assembly with a lifting device capable of 100 lbs., and removing the top pin on the shank mount and removing the side plates from the rear end of the spring assembly.

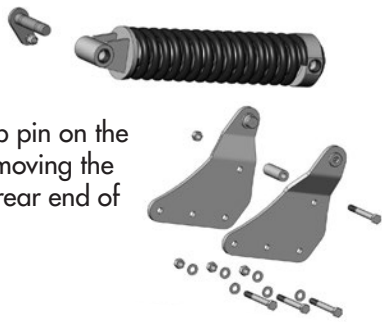

SHANK HYDRAULIC CIRCUIT SERVICE/ ACCUMULATOR ADJUSTMENT

⚠ **DANGER:** *Accumulators contain stored hydraulic energy which can cause serious injury or death.*

DO NOT ATTEMPT TO SERVICE ***without safely releasing the pressure in the shank circuit. Do not loosen any fittings until the circuit branch has been isolated and the pressure has been relieved using the procedure below.***

Hydraulic Trip Accumulator & **Branch Isolation Valve** locations:

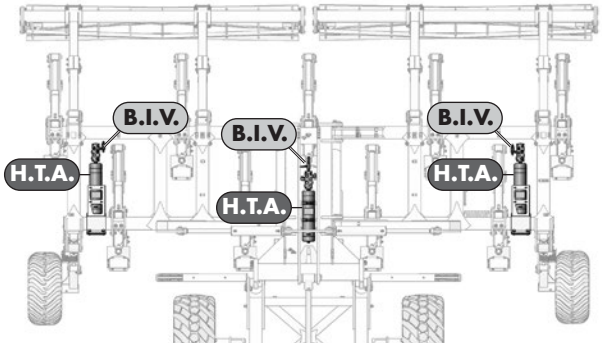

To perform maintenance on a circuit branch or perform pre-charge adjustment on accumulators:

1. Servicing the hydraulic system on the HDSR is best performed with the machine unfolded in field position.
2. Ensure shank circuit is placed in float from the tractor and tractor is shut down.
3. Isolate the circuit branch you intend to work on by closing the corresponding ball valve nearest the accumulator. This step ensures you do not have to bleed fluid from all three accumulators to perform service.

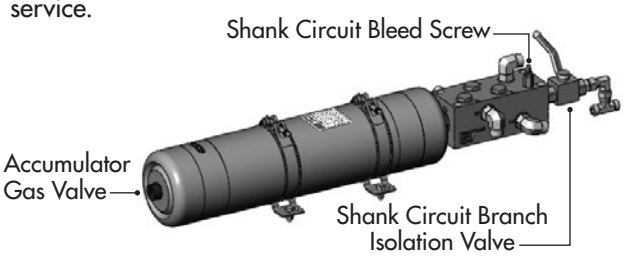

4. Attach a piece of flexible tubing with 1/4‴ ID to the bleed screw on the accumulator manifold and place the other end in a pail resting on the ground.

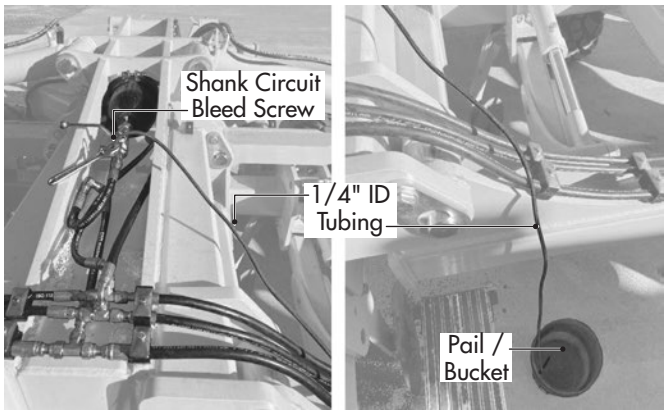

5. Carefully use a wrench to slowly turn the bleed screw counterclockwise to loosen until fluid starts to enter the tubing and drain into the pail. Continue bleeding until draining fluid has been reduced to a drip with the bleed screw open.
6. It is now safe to service this branch of the shank circuit only. If other branches also need service or when adjusting accumulator pressure in all three accumulators, repeat steps 4-5 above for other circuit branches.

IMPORTANT: Do not forget to open all 3 *Branch Isolation Valves* once service is complete.

SHANK CIRCUIT AIR BLEED PROCEDURE

In the event that a particular shank cylinder is acting spongey and without pressure, air can be manually bled from the shank circuit. In certain circumstances, air can become entrained in the oil such as when a cylinder or hose in the shank circuit is replaced, or if there is a loose fitting.

To manually bleed air from the system:

1. Shut off the ***Shank Circuit (2)*** from the tractor. Shut off the tractor.
2. Close the ***2 Accumulator Isolation Valves*** which are not connected to the cylinder(s) being bled. Leave open the accumulator isolation valve on the accumulator manifold connected to the cylinder(s) to be bled of air.
3. Connect a 1/4" ID hose to the bleed screw on the accumulator manifold and place the other end of the hose in a pail to collect oil.

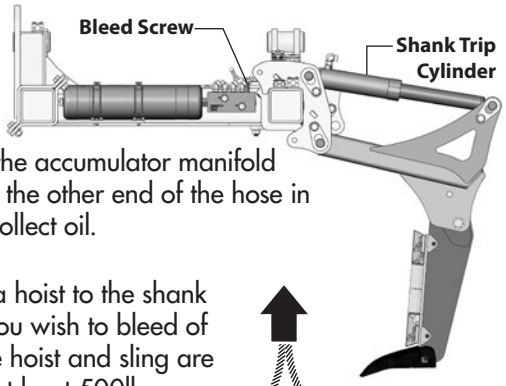

4. Connect a hoist to the shank cylinder you wish to bleed of air. Ensure hoist and sling are rated for at least 500lb.

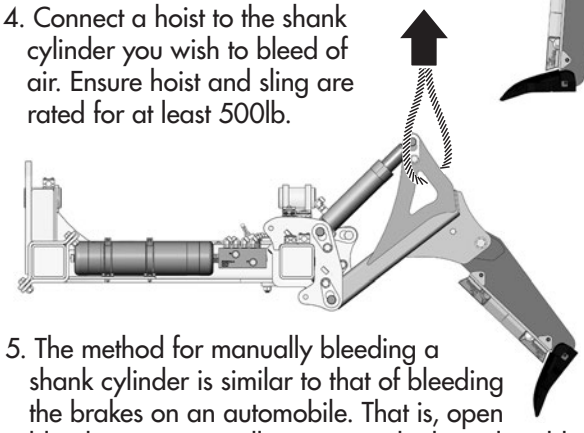

5. The method for manually bleeding a shank cylinder is similar to that of bleeding the brakes on an automobile. That is, open bleed screw, manually actuate cylinders, close bleed screw, and repeat. In this case, use a wrench to carefully open the bleed screw. Then, slowly hoist the shank up to compress the cylinder. Oil should enter the collection pail taking entrapped air bubbles with it. Once the cylinder is fully retracted, close the bleed screw.
6. Unhook the hoist and clear the area. Start the tractor and engage the ***Shank Circuit (2)*** to re-fill the shank cylinder with new oil.
7. Ensure all accumulator isolation valves are open and test the newly bled shank cylinder's performance in the field. Repeat steps 1-6 as necessary until all air is bled from the shank cylinder and it performs as expected.

PISTON ACCUMULATOR NITROGEN PRE-CHARGE PRESSURE ADJUSTMENT

Nitrogen pre-charge in each accumulator should be set to 60-90% of desired shank circuit pressure. The HDSR is configured from factory with a 2000 psi accumulator pre-charge and 2200 psi shank pressure valve setting.

All work on hydraulic accumulators must only be carried out by suitably trained staff as incorrect installation or handling can lead to serious accidents. Contact your local dealer trained in hydraulic piston accumulator service for accumulator precharge adjustment.

Your local hydraulic accumulator specialist will require a Hydac FPU-1 charging and testing unit *(or similar)* with the correct gas valve adapter *(gas valve type* M28x1.5/ M8*)* to check or adjust the Nitrogen pre-charge pressure.



⚠ DANGER: <u>RISK OF BURSTING</u>

On no account must any welding, soldering or mechanical work be carried out on the hydraulic accumulator. These types of unauthorized work lead to a loss of operating permission.

⚠ DANGER: <u>RISK OF EXPLOSION</u>

Hydraulic accumulators must only be charged with Nitrogen. <u>*Never*</u> use oxygen or air.

⚠ DANGER: <u>RISK OF BURNS</u>

The accumulator shell can become hot.

⚠ DANGER: <u>RISK OF SUFFOCATION</u>

Nitrogen is released into the surrounding area when draining nitrogen from the hydraulic accumulator or when safety devices respond. Large quantities of nitrogen in enclosed areas cause a lack of oxygen: ventilate areas.

⚠ WARNING: <u>GAS UNDER PRESSURE</u>

After discharging and/or completely draining the hydraulic accumulator (e.g. to depressurize the hydraulic system before work is carried out), the accumulator can build up an amount of pressure again if the lines are later shut off on the fluid side.

All the fluid-side lines connected to the hydraulic accumulator must be depressurized and after that the lines must remain open. Only then may the hydraulic accumulator be removed from the hydraulic system.

Before working on the hydraulic accumulator itself, the gas side of the hydraulic accumulator must be depressurized and remain open. Ensure that the gas side is depressurized. Only then may the appropriate work (e.g. disassembly of the hydraulic accumulator) be carried out.

SERVICE

GREASING

Grease: Use an SAE multipurpose grease with extreme pressure (EP) performance. Also acceptable is an SAE multipurpose lithium.

1. Use only a hand-held grease gun for all greasing.
2. Wipe grease fitting with a clean cloth before greasing, to avoid injecting dirt.
3. Replace and repair broken fittings immediately.
4. If fittings will not take grease, remove and clean thoroughly. Also clean lubricant passageway. Replace fitting if necessary.
5. Inject grease until you see grease being expelled from the bearing or bushing areas.

WHEEL NUT & WHEEL BOLT TORQUE

TORQUE

BOLT PATTERNS

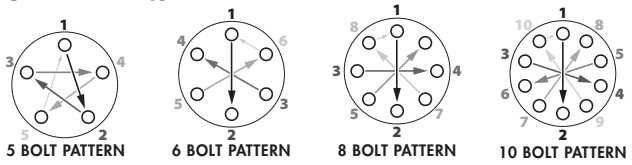

Wheel Nut/Bolt Torque

Size	lb.ft (N.m)
9/16	120-130 (165-175)
5/8	185-190 (250-260)
3/4	280-300 (380-405)

Wheel Tightening Procedure

1. Install and **hand tighten** nuts/bolts.
2. Tighten to approx. **20% Torque** value using the Bolt **Star or CrissCross** patterns shown above.
3. Tighten to **Full Torque** value using the **Star or CrissCross** pattern.
4. If applicable, install **Rear Locknuts** using **Wheel Torque Values**.

WHEEL HUB REPAIR

IMPORTANT: *Be sure to block up unit securely before removing tires.*

DISASSEMBLY

1. Remove dust cap.
2. Remove cotter pin from nut.
3. Remove nut and washer.
4. Pull hub off spindle.
5. Dislodge the inner cone bearing and dust seal.
6. Inspect cups that are press fitted into hub for pits or corrosion and remove if necessary.
7. Inspect and replace defective parts with new ones.

ASSEMBLY

1. If cups need replacing, be careful to install them gently and evenly into hub until they are fully seated.
2. Apply a thick wall of grease inside hub. Pack grease in cones.
3. Install inner cone and dust seal as illustrated.
4. Position hub onto spindle and fill surrounding cavity with grease.
5. Assemble outer cone, washer and nut.
6. Tighten nut while rotating hub until there is a slight drag.
7. Turn nut back approximately 1/2 turn to align cotter pin hole with notches on nut.
8. Install cotter pin and bend legs sideways over nut.
9. Fill dust cap half full of grease and gently tap into position.
10. Pump grease into hub through grease fitting until lubricant can be seen from dust seal.

COMMON HUB & SPINDLE COMPONENTS

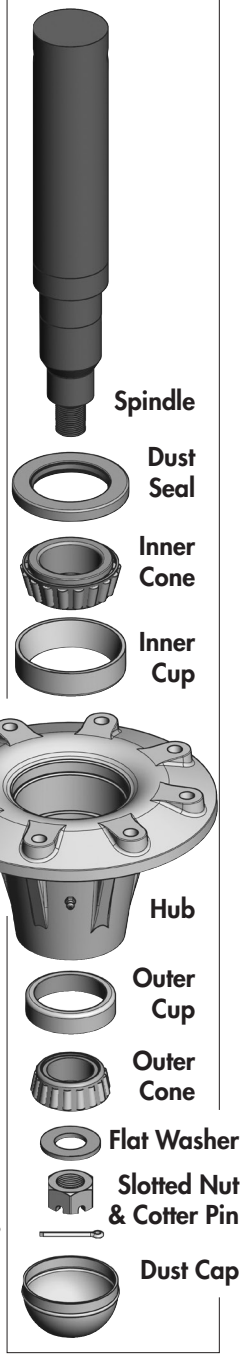

HYDRAULIC CYLINDER REPAIR

PREPARATION

When cylinder repair is required, clean off unit, disconnect hoses and plug ports before removing cylinder.

When removed, open the cylinder ports and drain the cylinder's hydraulic fluid.

Examine the type of cylinder. Make sure you have the correct tools for the job.

You may require the following tools:

- *Proper **Seal Kit***
- *Allen Key Set*
- *Emery cloth*
- *Torque Wrench*

Threaded Head Cylinder
(Monarch)

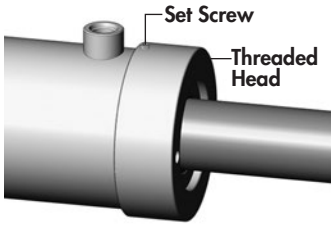

CYLINDER ROD LOCKNUT TORQUE VALUES

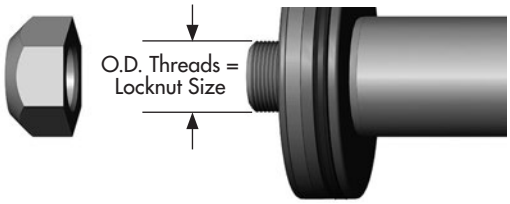

LOCKNUT SIZE (PISTON)	TORQUE VALUE
3/8 - 24 UNF	25-30 lb.ft (35-42 *N.m*)
1/2 - 20 UNF	**40-60 lb.ft *(55-80 N.m)***
5/8 - 18 UNF	95-105 lb.ft (130-140 *N.m*)
3/4 - 16 UNF	**175-225 lb.ft *(240-305 N.m)***
7/8 - 14 UNF	200-275 lb.ft (270-370 *N.m*)
1 - 14 UNF	**300-380 lb.ft *(405-515 N.m)***
1 1/8 - 12 UNF	400-500 lb.ft (540-675 *N.m*)
1 1/4 - 12 UNF	**500-600 lb.ft *(675-810 N.m)***
1 1/2 - 12 UNF	700-800 lb.ft (950-1085 *N.m*)
1 3/4 - 12 UNF	**800-900 lb.ft *(1085-1220 N.m)***

REPAIRING A THREADED HEAD CYLINDER

Set Screw Style

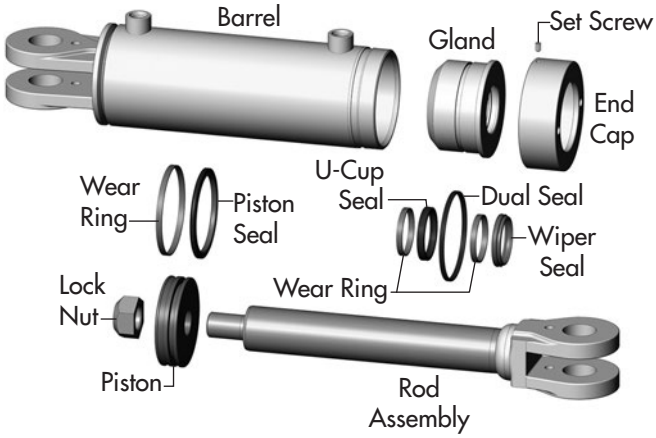

DISASSEMBLY

1. Loosen Set Screw and turn off end cap.
2. Carefully remove piston/rod/gland assemblies.
3. Disassemble the piston from the rod assembly by removing lock nut.

NOTE: *DO NOT* clamp rod by chrome surface.

4. Slide off gland assembly & end cap.
5. Remove seals and inspect all parts for damage.
6. Install new seals and replace damaged parts with new components.
7. Inspect the inside of the cylinder barrel, piston, rod and other polished parts for burrs and scratches. Smooth areas as needed with an emery cloth.

REASSEMBLY

1. Reinstall rod through end cap & gland assembly.
2. Secure piston to rod with lock nut. Torque lock nut to proper value (refer to chart for proper torque value).
3. Lube inside of barrel, piston seals, and gland seals with hydraulic oil.
4. With cylinder body held gently in a vise, insert piston, gland, end cap and rod combination using a slight rocking motion.
5. Apply Loctite anti-seize before installing cylinder end cap.
6. Torque cylinder end cap to 440 lb.ft (600 N.m).
7. Tighten Set Screw on end cap to 6 lb.ft (8 N.m).

REPLACING A PRESSED BUSHING

NOTE: *You may need the following tools: Press, hammer, punch, pry-bar, "Step-Tool"*

Use the following as a guideline for repair:

1. Ensure the area and frame are properly secured, supported, and safe to work on. Safely remove the pin(s), cylinder, and/or components necessary in order to access and work on the damaged bushing.
2. Remove the existing bushing using required tools. In some instances, you may need to cut the damaged bushing in order for easier removal (use proper safety precautions and try not to damage other components if using this method).
3. With the bushing removed, clean and prepare the location for the new bushing insert. **Note:** A mixture of "*Dish Soap and Water*" is recommended to use as a lubricant on the outside of the composite bushing.

> ⚠ **IMPORTANT:** DO NOT use *oil or grease* on outside or inside of composite bushings.

4. Use a stepped tool to ensure the edge of the bushing is not damaged when inserting.

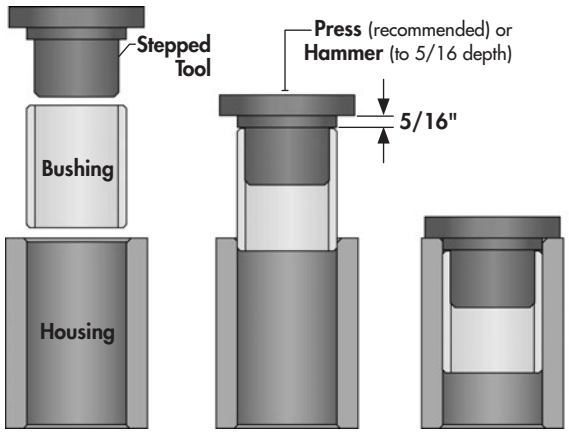

5. Ensuring the bushing is properly aligned, press into hole (preferred method) or hammer into position by striking the stepped tool.
6. Continue to install until the bushing edge is recessed in to a distance of 5/16" to allow for the outer seal to be properly installed. Do not exceed this depth.
7. Repeat steps 4-6 for opposite bushing (*if applicable*).
8. When both bushings are installed to the proper depth, install the new seals.
9. Re-assemble all other necessary components.

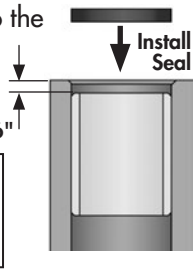

> ⚠ **IMPORTANT:** DO NOT use *oil or grease* on pins or bushing surfaces when re-installing.

STORAGE

The HDSR should be carefully prepared for storage to ensure that all dirt, mud, debris and moisture has been removed.

Follow this procedure when preparing to store:

1. Wash the entire machine thoroughly using a water hose or pressure washer to remove all dirt, mud, debris or residue.
2. Inspect all parts to see if anything has become entangled in them. Remove entangled material.
3. Lubricate all grease fittings to remove moisture (except spherical bearings).
4. Inspect all hydraulic hoses, fittings, lines and couplers. Tighten any loose fittings. Replace any hose that is badly cut, nicked or abraded or is separating from the crimped end of the fitting.
5. Touch up all paint nicks and scratches to prevent rusting.
6. Select an area that is dry, level and free of debris.
7. Store in Transport position.
8. Use hydraulic cylinder jack.
9. Oil any exposed chrome shafts on the hydraulic cylinders to prevent rusting.

NOTE: If storing the HDSR for long periods of time in "Transport Position", flip-up all the depth spacers on the center depth spacer carriage to prevent set-in of the spring linkage.

SAFETY DECALS & REFLECTORS

Keep safety decals and signs clean and legible at all times. Replace safety decals and signs that are missing or have become illegible. Safety decals or signs are available from your Dealer Parts Department.

DECAL LOCATION OVERVIEW

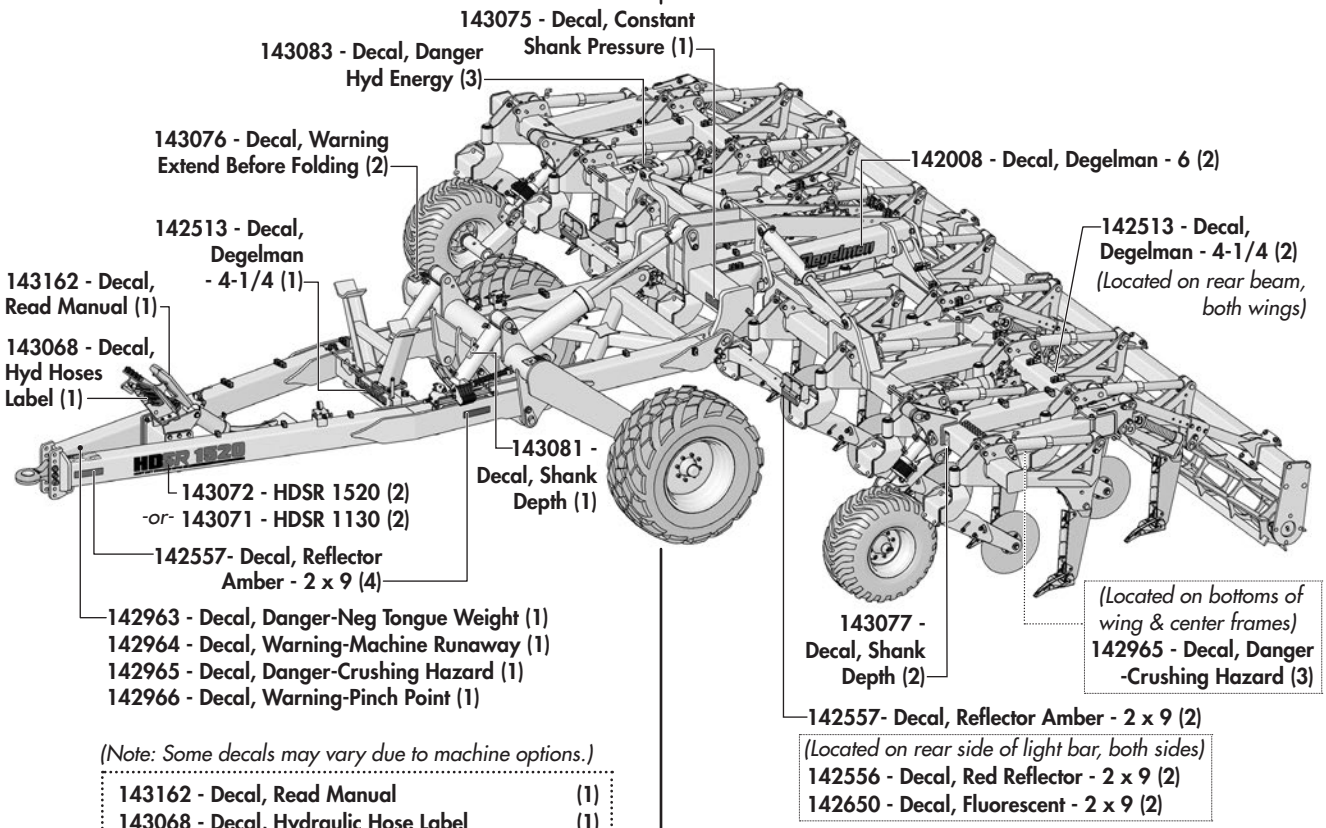

(Note: Some decals may vary due to machine options.)

143162 - Decal, Read Manual	(1)
143068 - Decal, Hydraulic Hose Label	(1)
142963 - Decal, Danger-Neg Tongue Weight	(1)
142964 - Decal, Warning-Machine Runaway	(1)
142965 - Decal, Danger-Crushing Hazard	(4)
142966 - Decal, Warning-Pinch Point	(1)
143075 - Decal, Warning-Constant Pressure	(1)
143076 - Decal, Warning-Extend Before Folding	(2)
143077 - Decal, Shank Depth-Gauge Wheel	(2)
143081 - Decal, Shank Depth-Center Wheel	(1)
143083 - Decal, Danger-Hyd Energy	(3)
142556 - Decal, Reflector Red - 2 x 9	(2)
142557 - Decal, Reflector Amber - 2 x 9	(6)
142650 - Decal, Fluorescent - 2 x 9	(2)
142008 - Decal, Degelman - 6"	(2)
142514 - Decal, Degelman - 4-1/4"	(3)
143071 - HDSR 1130	(2)
143072 - HDSR 1520	(2)

HDSR Part Section Overview

***PARTS SECTION* - TABLE OF CONTENTS**

HDSR Section Overview	*27*
Hitch Frame Overview & Components	*28*
Rockshaft & Wheel Components	*31*
Center Frame Components	*32*
Wing Frame Components	*33*
Shank Position Overview	*35*
Trip, Shank, & Point Components	*36*
Coulter Option Components	*38*
Chopper Roller Option & Components	*39*
Cylinder & Depth Stop Components	*41*
Hydraulic Routing	*42*
Electrical Routing	*49*
Hydraulic Schematics	*50*
Warranty	***51***

Exploded Overview of HDSR

(image, design, options may vary)

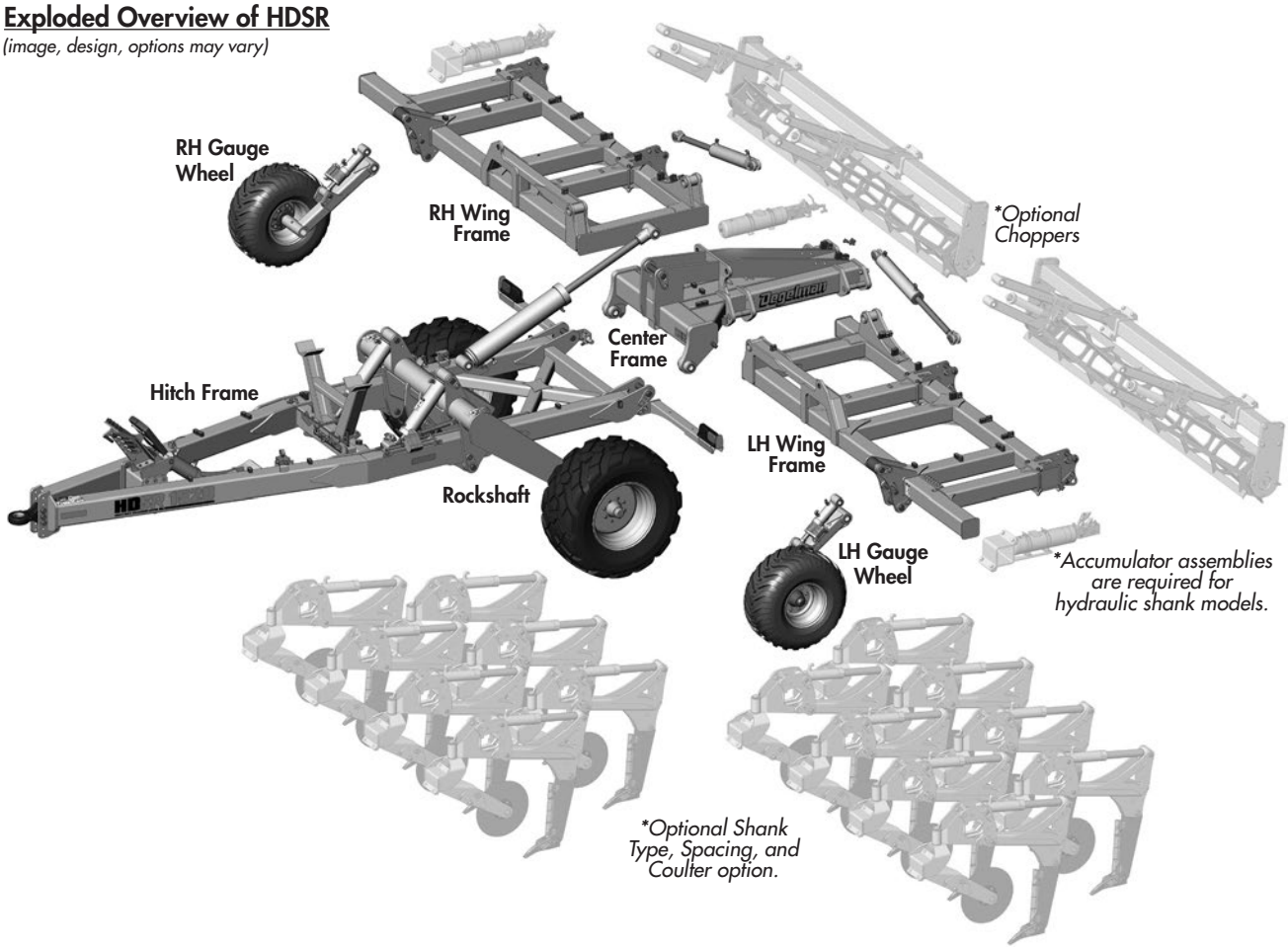

Hitch Frame Overview

Overview of Hitch Frame & Rockshaft Components

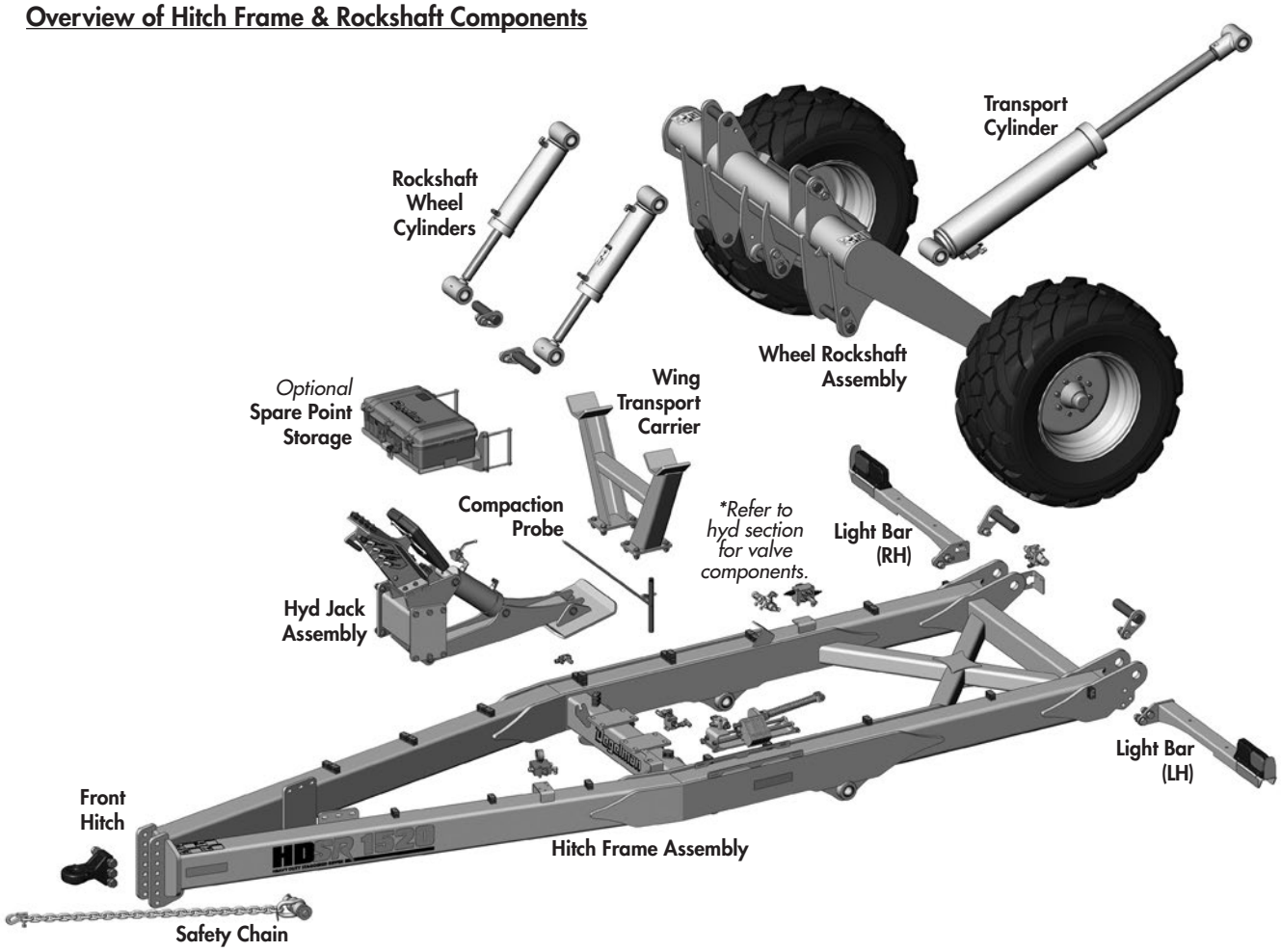

Front Hitch & Frame Components

**Hyd clamp usage will vary depending on model options.*
(1520 model with hydraulic options shown)
Spring & Sheer Trip Models: **(A)***x16 &* **(B)***x4*

Front Hitch Options

124029 - Front Hitch, CAT4 (1)
c/w ***124045 - Ball, 2" (1)***

124043 - Front Hitch, CAT5 (1)
c/w ***124047 - Ball, 2-3/4" (1)***

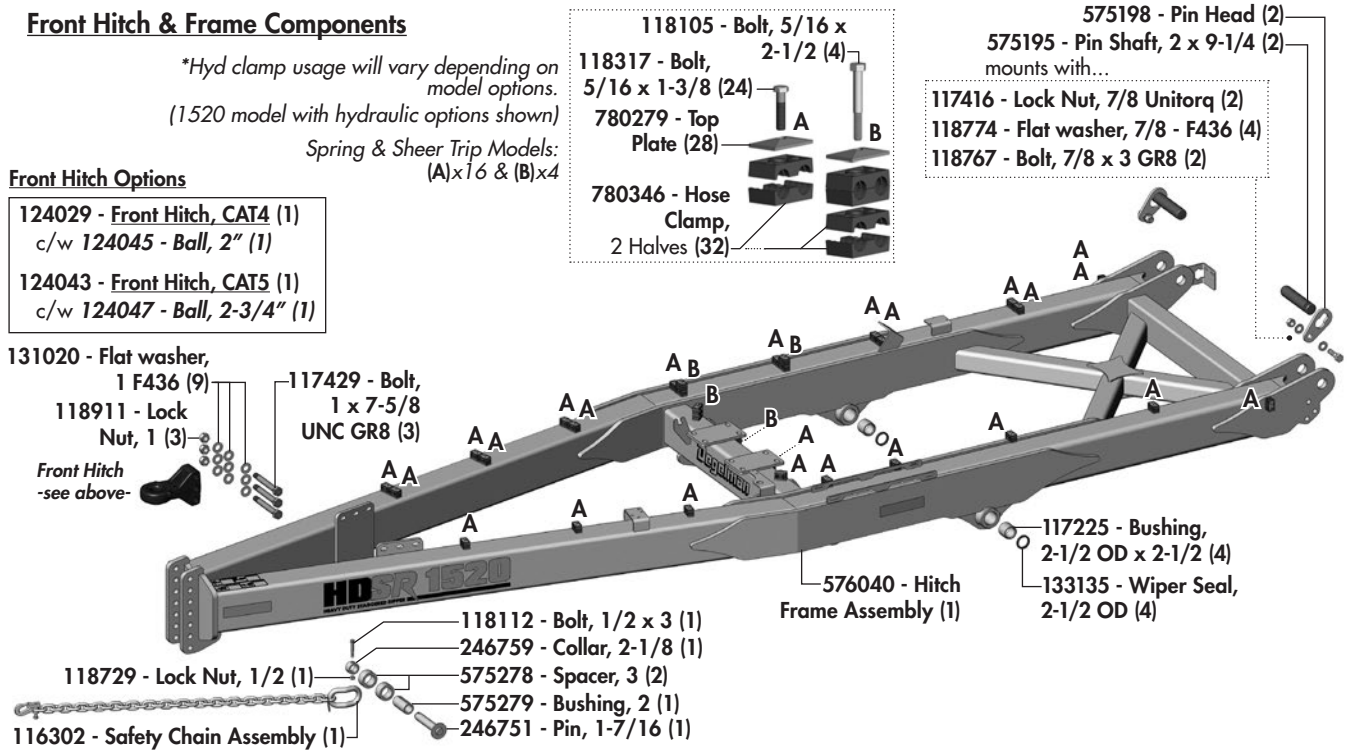

Hitch Frame Components

Wing Carrier Components

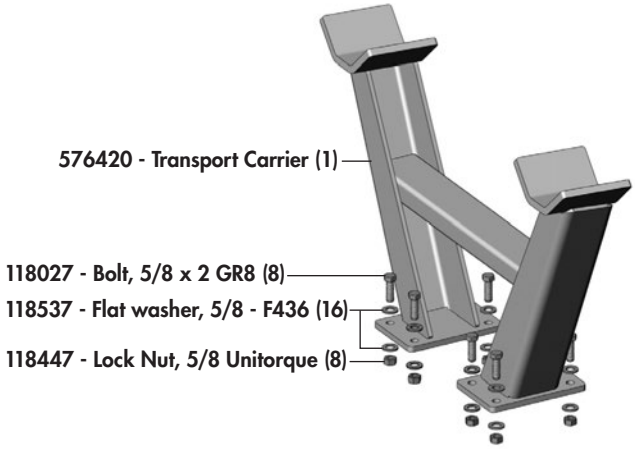

Light Bar Components

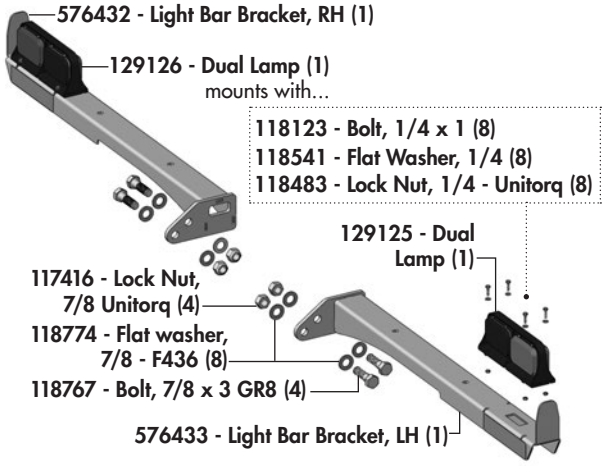

Manual Holder Components

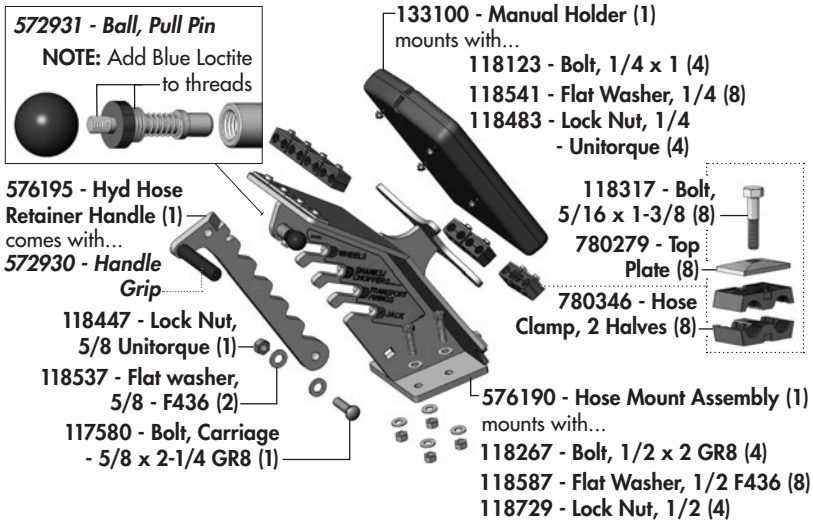

Optional: Spare Point Storage

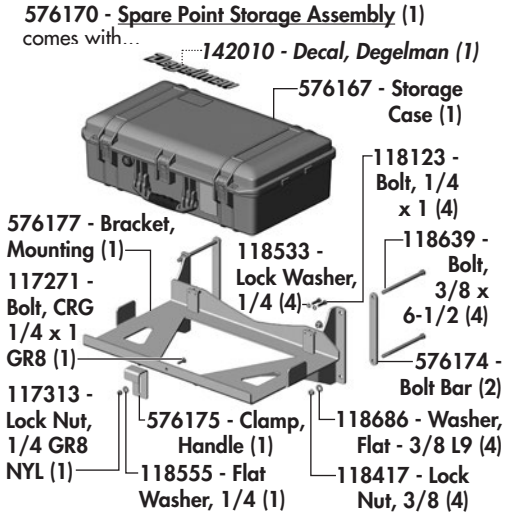

Hydraulic Jack Holder Components

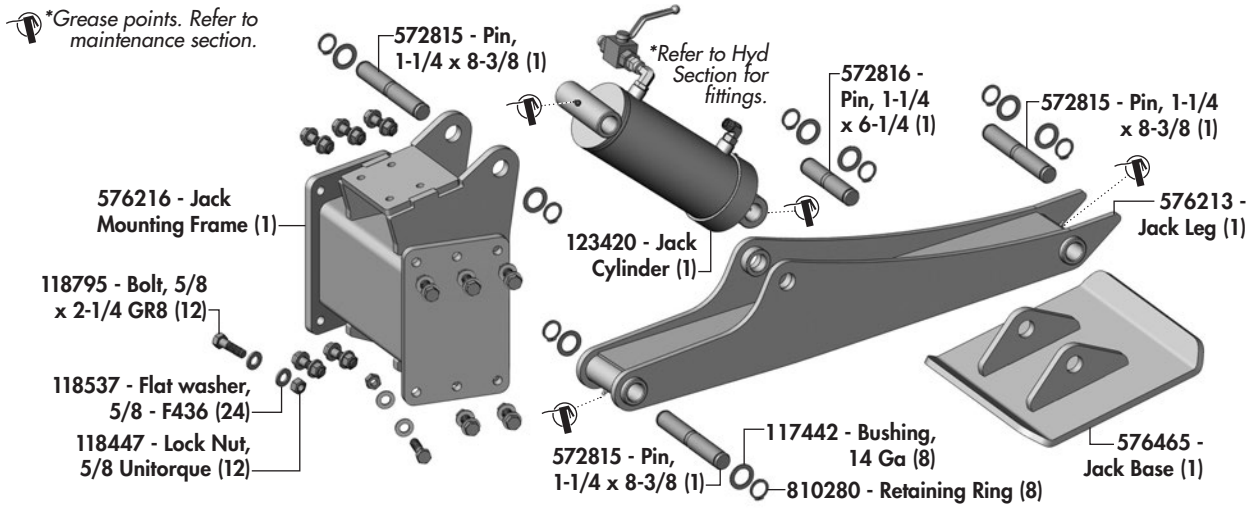

Hitch Frame Components

Depth Control Components

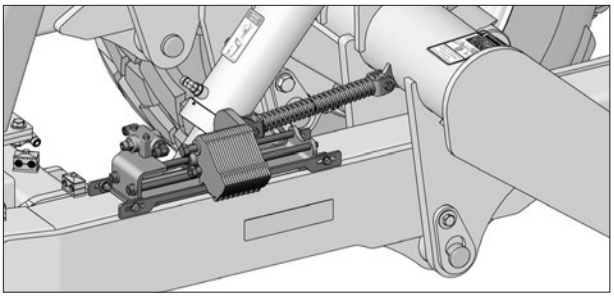

576384 - Spring Rod Assy (1)
119093 - Roll Pin, 1/4 x 1 (1)
576380 - Spring Bushing Assembly (1)
576388 - Depth Stop, Upper Pin (9)
576389 - Depth Stop, Lower Pin (9)
118537 - Flat washer, 5/8 - F436 (1)
143000 - Spring (1)
Used as spacers.
118587 - Flat Washer, 1/2 F436 (8)
117654 - Bolt, 5/8 x 6-1/2 GR8 (1)
117509 - Bolt, 5/8 x 6 GR8 (1)
576524 - Spring (1)
576398 - Shim Carriage (1)
118718 - Lock Nut, 5/16 Unitorque (2)
118017 - Bolt, 1/2 x 2-1/2 (2)
118729 - Lock Nut, 1/2 (2)
141598 - Valve, Remote Stroke control (1)
117280 - Bushing, 5/8 (4)
118105 - Bolt, 5/16 x 2-1/2 (2)
576396 - Rod (2)
117319 - Jam Nut, 5/8 UNF (2)
576526 - Rod Holder Assy (1)
118508 - Lock washer, 5/8 (2)
118686 - Flat washer, 3/8 L9 (8)
118129 - Bolt, 3/8 x 1-1/4 (4)
118417 - Lock Nut, 3/8 (4)

Compaction Probe Components

576360 - Compaction Probe Assembly (1) comes with...

576359 - Threaded Cap (1)
121368 - O-Ring, #116 (1)
576363 - Tip, 1/2 OD (1)
576362 - Tip, 0.73 OD (1)
576361 - T-Bar (1)

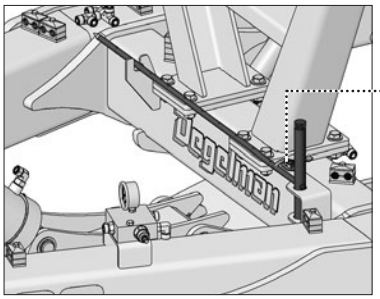

117666 - Draw Latch Assembly (1)



mounts with...

118998 - Screw, #10-24 x 1/2 (2)
117481 - Flat washer, #10 (2)
118000 - Nut, #10-24 (2)

Rockshaft & Wheel Components

Overview of Hitch Frame & Rockshaft Components

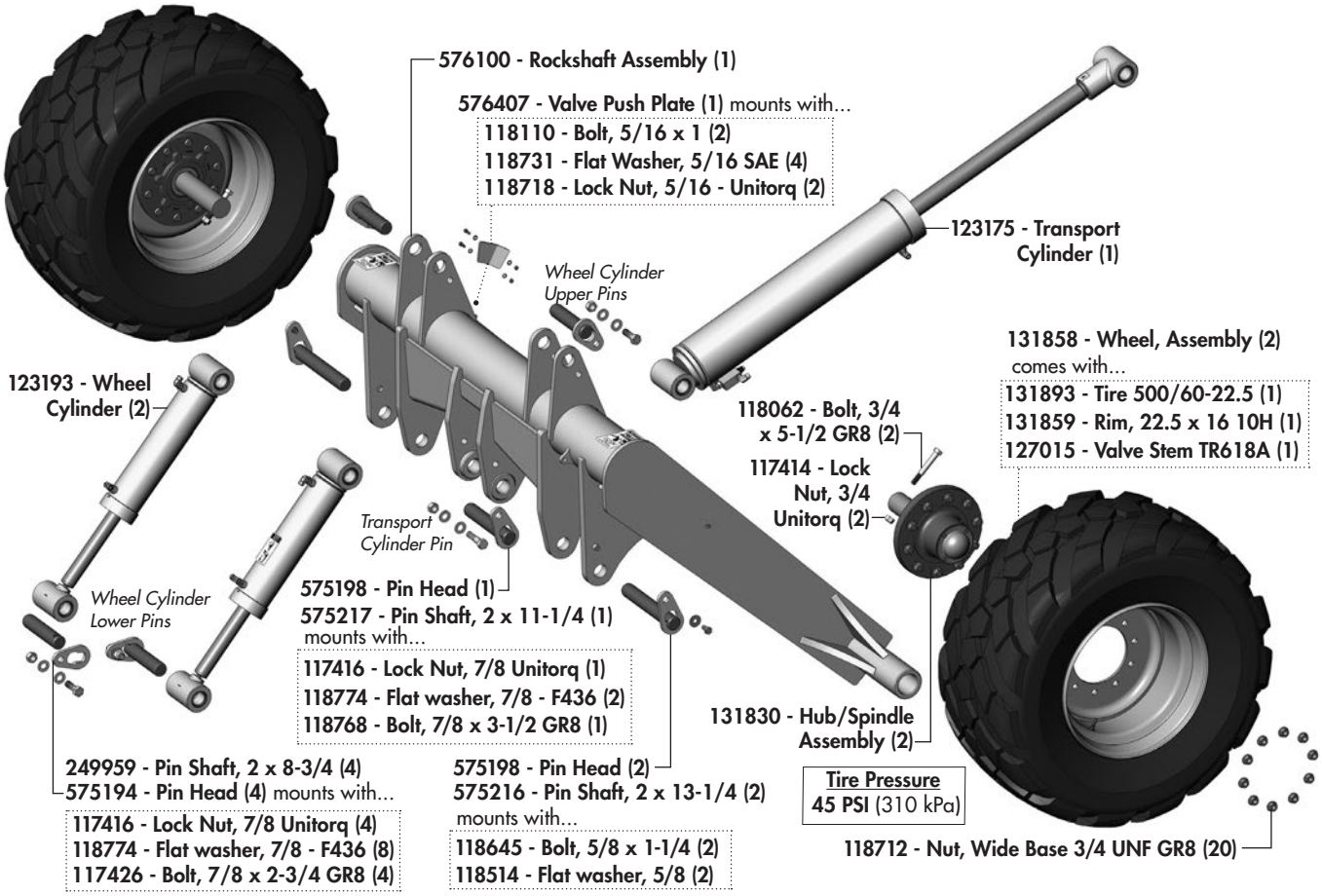

131830 - Hub/Spindle Assembly (2)

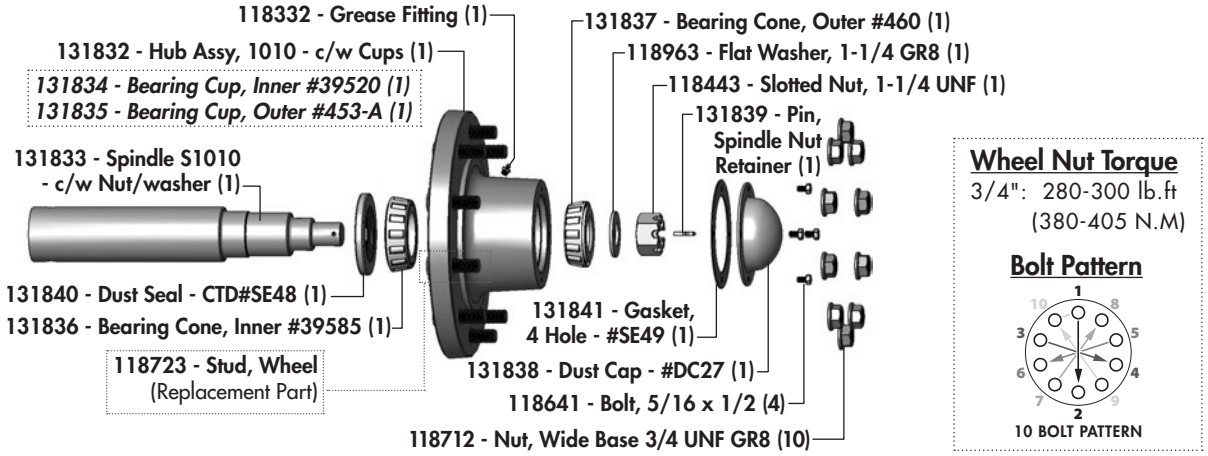

Wheel Nut Torque
3/4": 280-300 lb.ft
(380-405 N.M)

Bolt Pattern

10 BOLT PATTERN

Center Frame Components

Center Frame Components

**Grease points. Refer to maintenance section.*

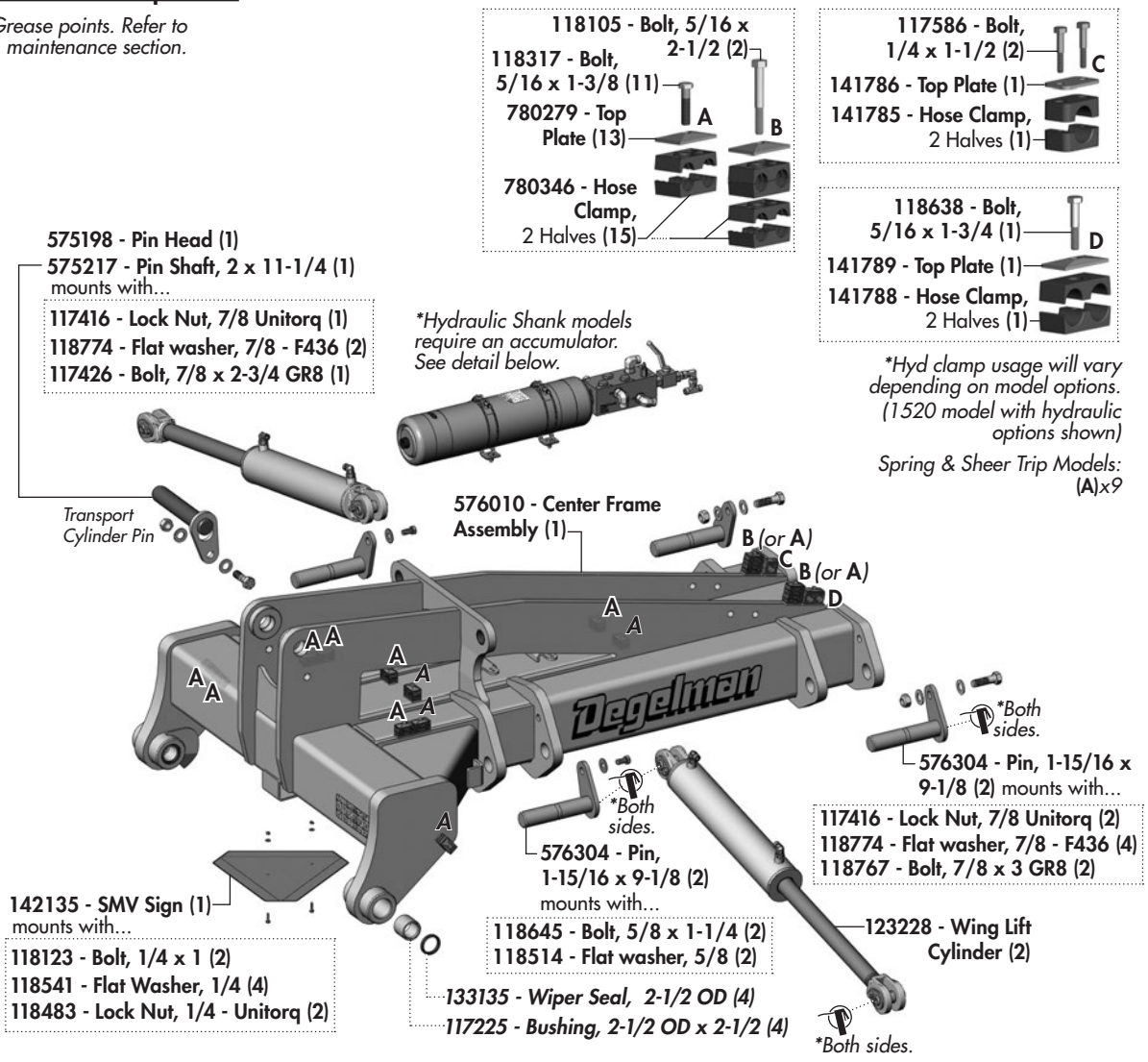

Center Frame Accumulator Components

Hydraulic Fittings *(1130 or 1520)*

1	141783 - Adaptor, 1 ORB M x 1 ORB M	(1)
2	141776 - Header Manifold - 5/8 ORB	(1)
3	141542 - Plug, Port, 5/8 ORB M	(5 or 3)
4	141720 - 90° Elbow, 5/8 ORB M x 5/8 ORFS M	(3 or 5)
5	141784 - Adaptor, 5/8 ORB M x 1/2 ORB M	(1)
6	141597 - Ball Valve - 3/4 ORB F	(1)
7	141703 - Adaptor, 1/2 ORB M x 1/2 ORFS M	(1)
8	141715 - 90° Elbow, 1/2 ORFS M x F-SW	(1)
9	141728 - Tee, 1/2 ORFS M x M x F-SW	(1)

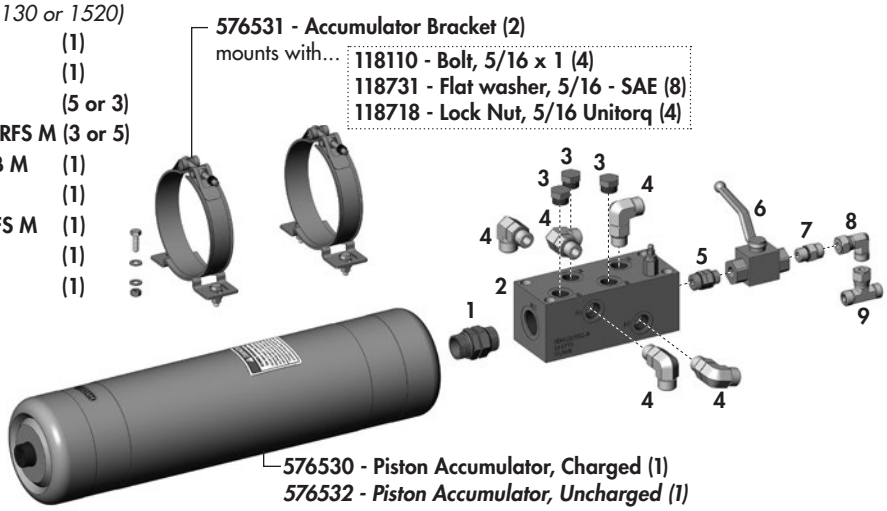

RH Wing Frame Components

RH Wing Frame Components

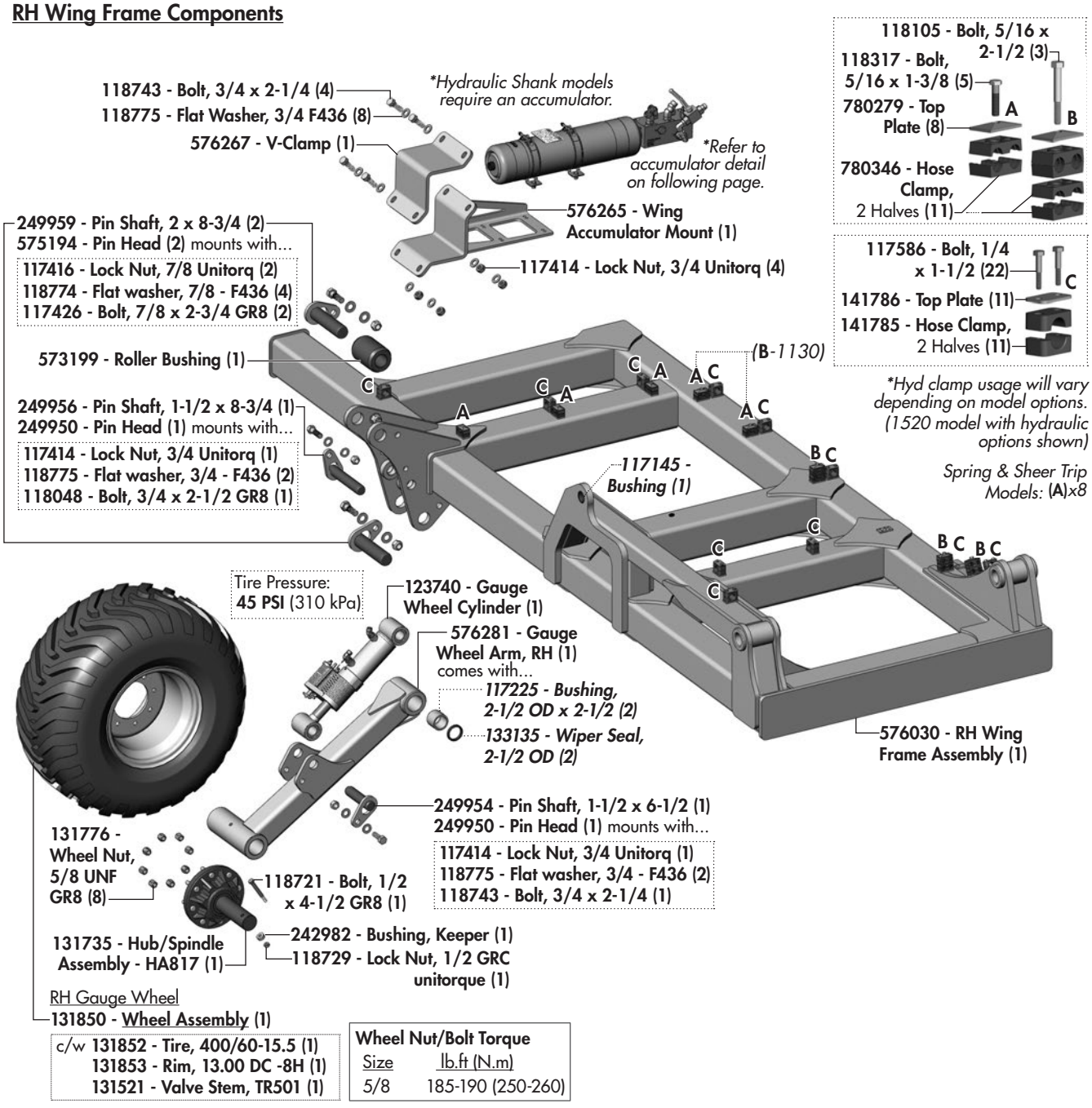

Wheel Nut/Bolt Torque	
Size	lb.ft (N.m)
5/8	185-190 (250-260)

131735 - Hub/Spindle Assembly (1)

Requires: 131776 - Wheel Nut, 5/8 -18 UNF (8)

Torque, 5/8 Wheel Nuts to: 185-190 lb.ft (250-260 N.m)

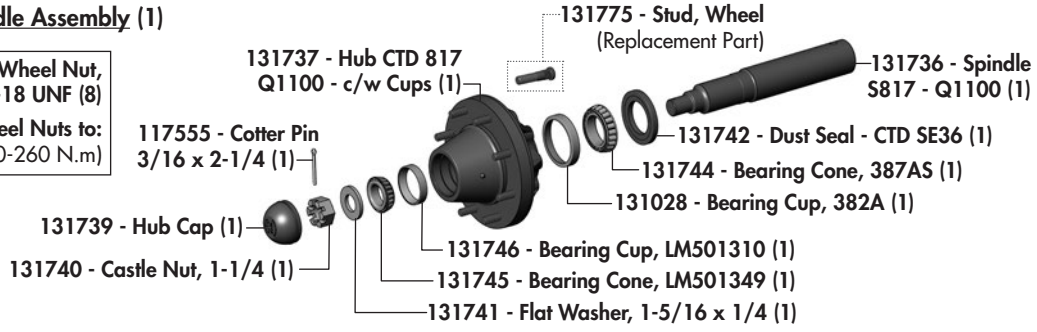

LH Wing Frame Components

LH Wing Frame Components

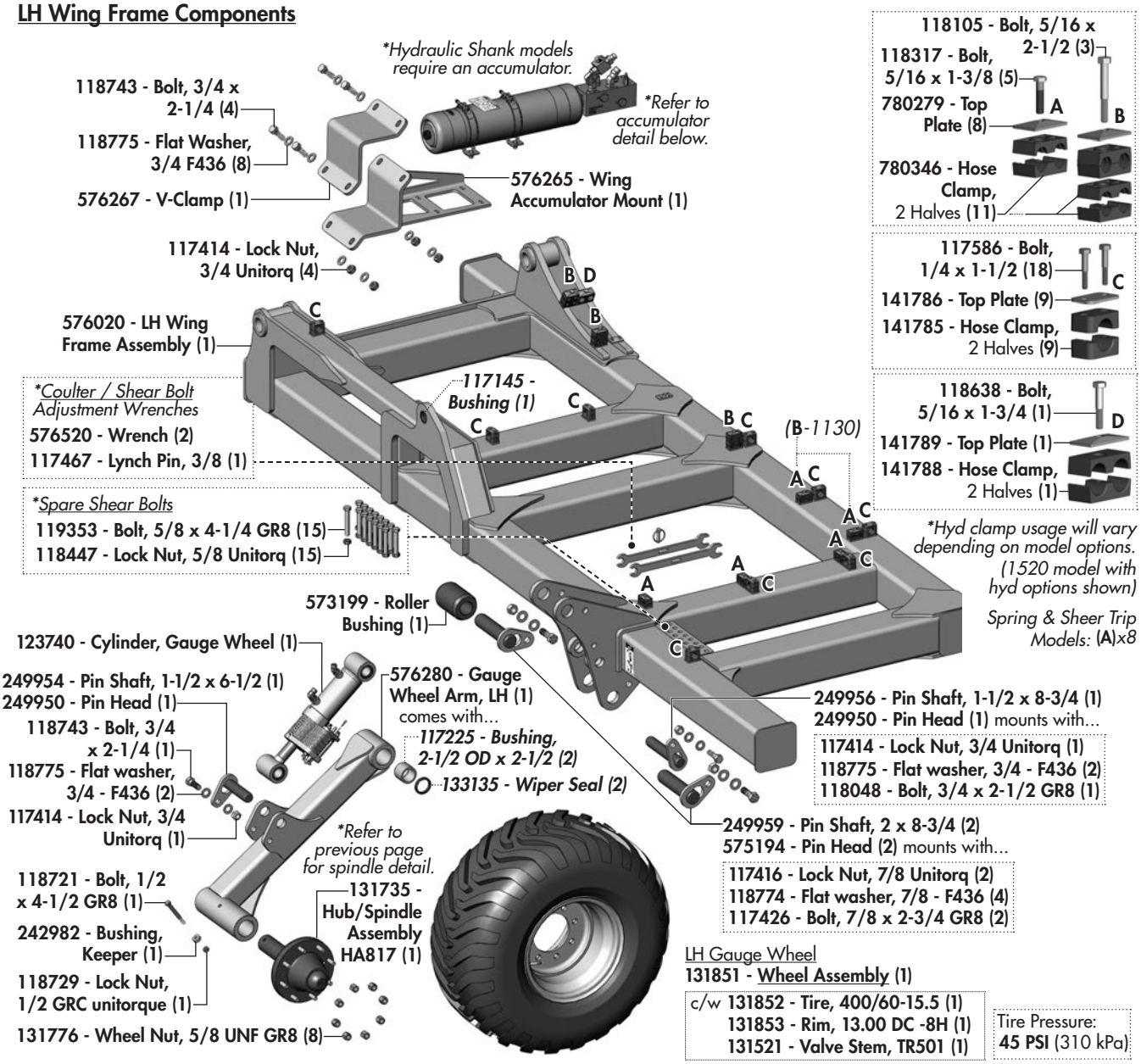

LH Gauge Wheel
131851 - Wheel Assembly (1)
c/w 131852 - Tire, 400/60-15.5 (1)
131853 - Rim, 13.00 DC -8H (1)
131521 - Valve Stem, TR501 (1)

Tire Pressure: 45 PSI (310 kPa)

Wing Frame Accumulator Components

576531 - Accumulator Bracket (2) mounts with...
118110 - Bolt, 5/16 x 1 (4)
118731 - Flat washer, 5/16 - SAE (8)
118718 - Lock Nut, 5/16 Unitorq (4)





Hydraulic Fittings (1130 or 1520)

1	141783 - Adaptor, 1 ORB M x 1 ORB M	(1)
2	141776 - Header Manifold - 5/8 ORB	(1)
3	141542 - Plug, Port, 5/8 ORB M	(3 or 2)
4	141782 - 45° Elbow, 5/8 ORB M x 5/8 ORFS M	(4)
5	141705 - 90° Elbow, 1/2 ORB M x 1/2 ORFS M	(1)
6	141597 - Ball Valve - 3/4 ORB F	(1)
7	141703 - Adaptor, 1/2 ORB M x ORFS M	(1)
8	141715 - 90° Elbow, 1/2 ORFS M x F-SW	(1)
9	141781 - Adaptor, 1/2 ORFS M x 5/8 ORB M	(1)
10	141720 - 90° Elbow, 5/8 ORB M x 5/8 ORFS M	(0 or 1)

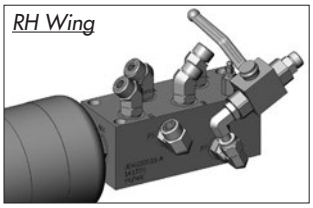

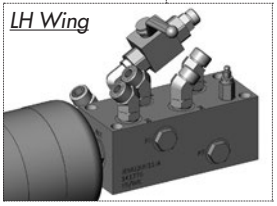

Shank Position Overview - 1130/1520

HDSR 1130 Shank Position Overview

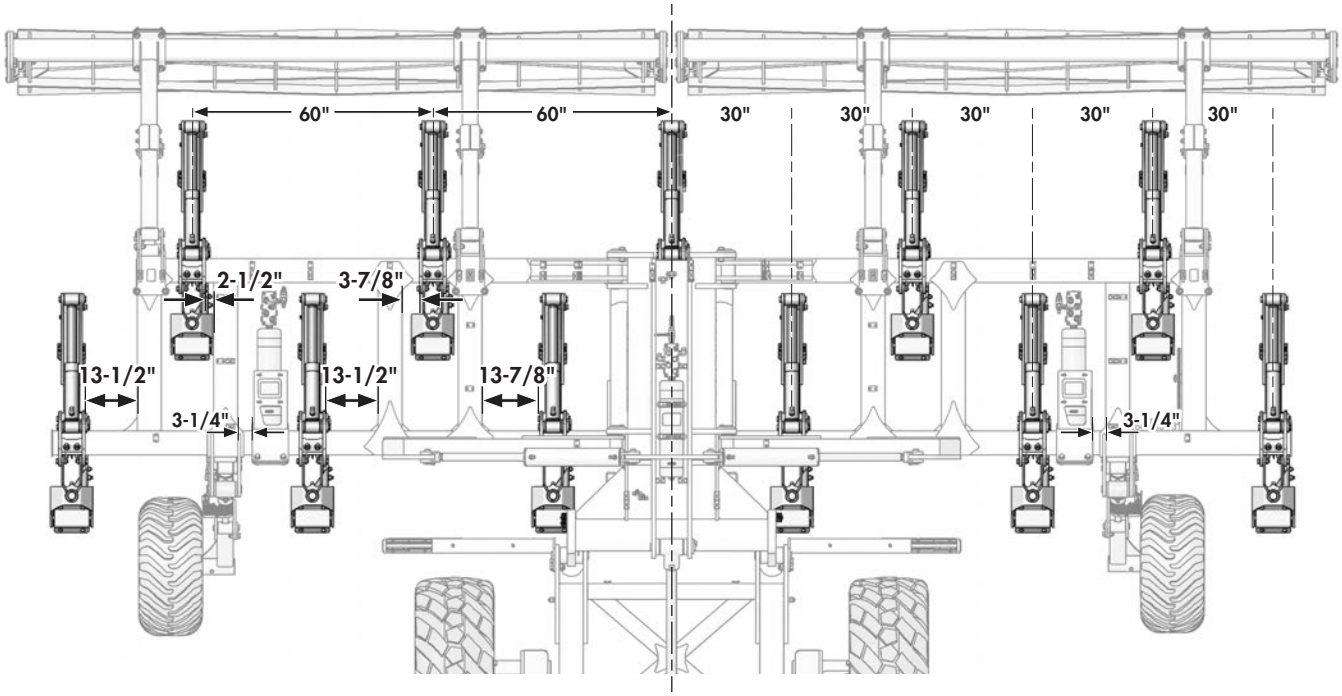

HDSR 1520 Shank Position Overview

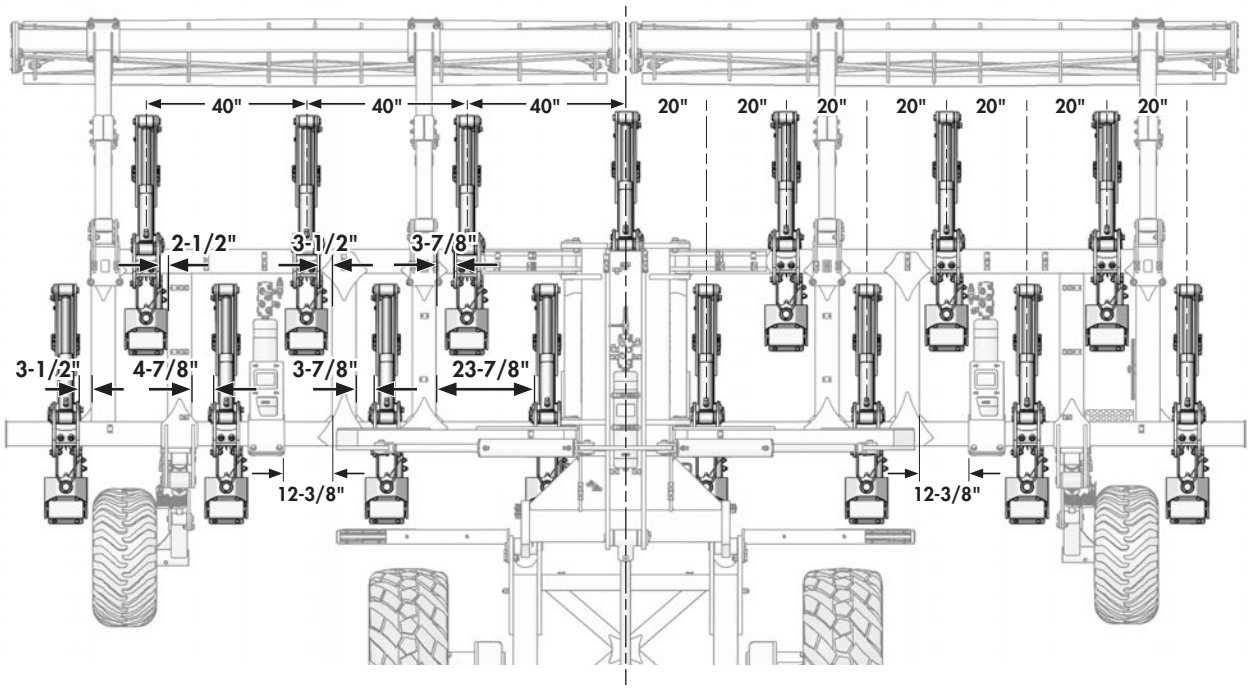

Overview of Trip/Shank Options

Overview of Shank Component Options

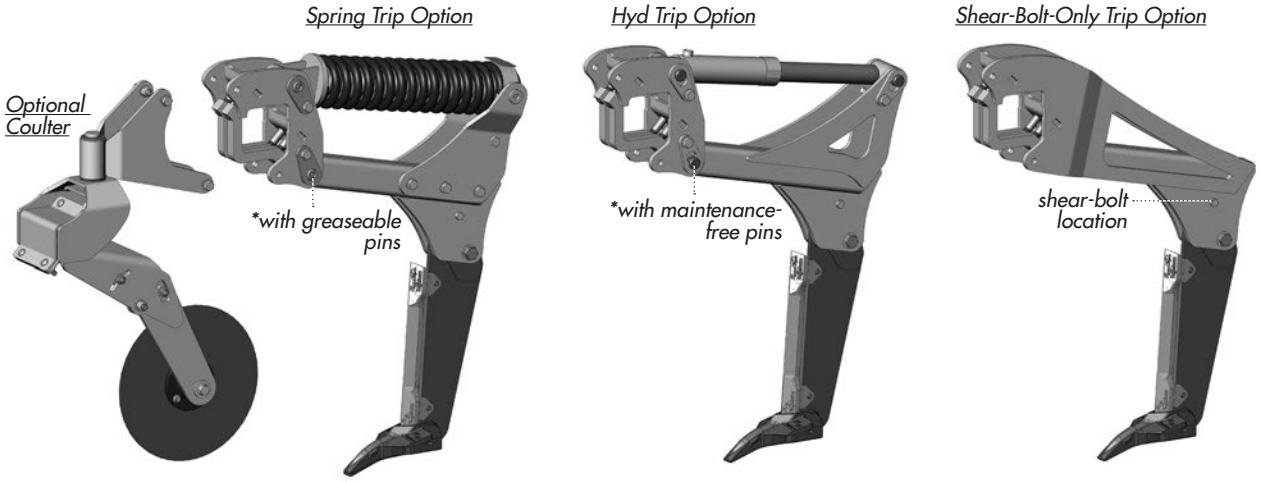

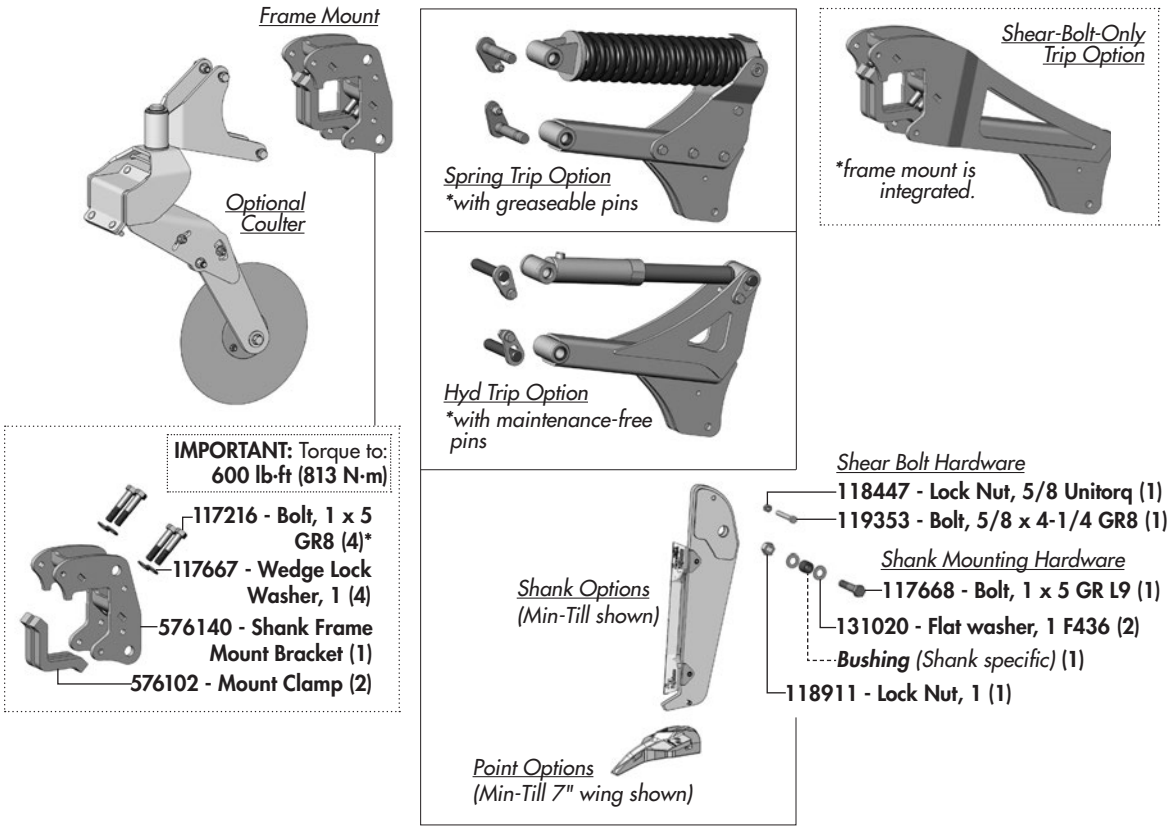

Trip/Shank Options

Spring Trip Mount Option Components

*Grease points. Refer to maintenance section.

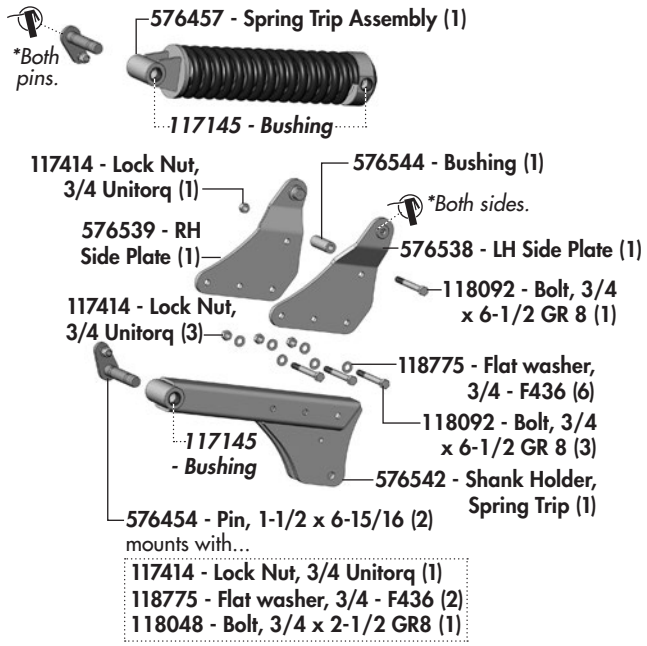

Hydraulic Trip Mount Option Components

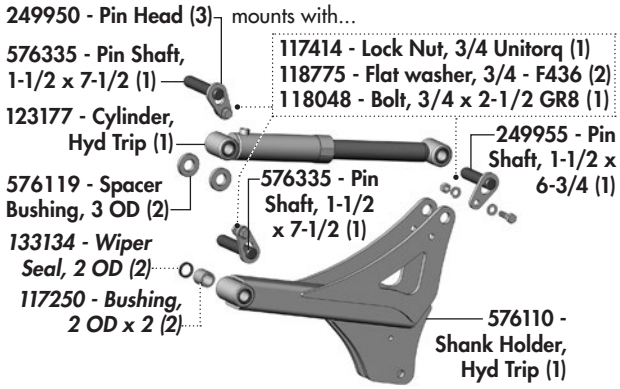

Shear-Bolt-Only Trip Option Components

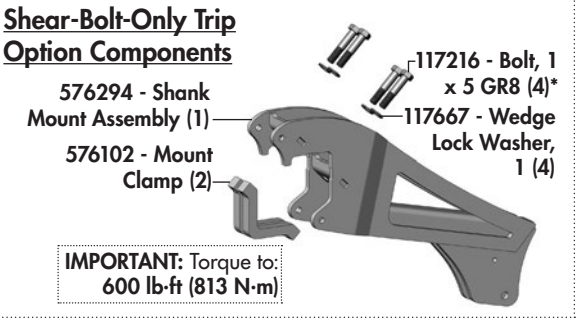

Shank Options

Min-Till 3/4" Shank Option

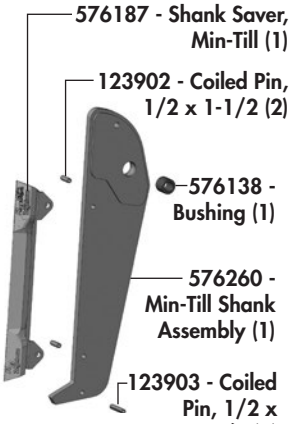

Straight 1-1/4" Shank Option

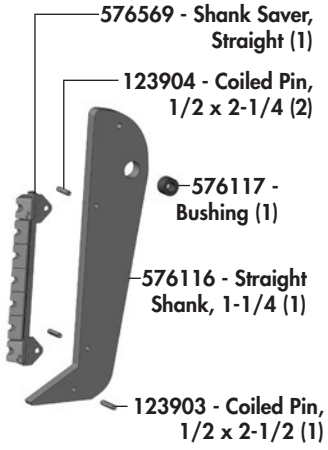

Parabolic 1-1/4" Shank Option

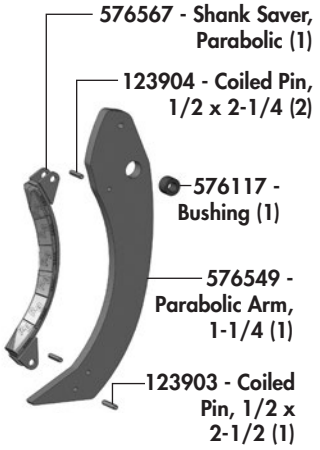

Point Options

For Min-Till 3/4" Shanks

Cast Points

576189 - 2" Min-Till Narrow Point (1)

576185 - 7" Min-Till Winged Point (1)



Fabricated Points



For Straight & Parabolic 1-1/4" Shanks

Cast Points

576559 - 3" Narrow Point (1)

576560 - 5" Wing Point (1)

576561 - 7" Wing Point (1)

576562 - 10" Wing Point (1)



Fabricated Points



Coulter Option Components

Coulter Option Components

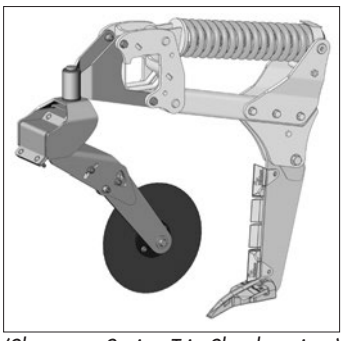

(Shown on Spring Trip Shank option.)

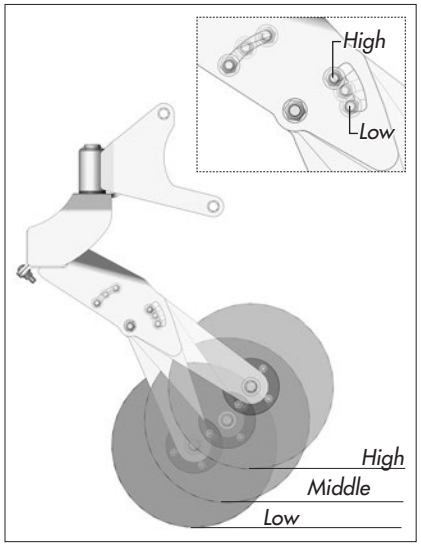

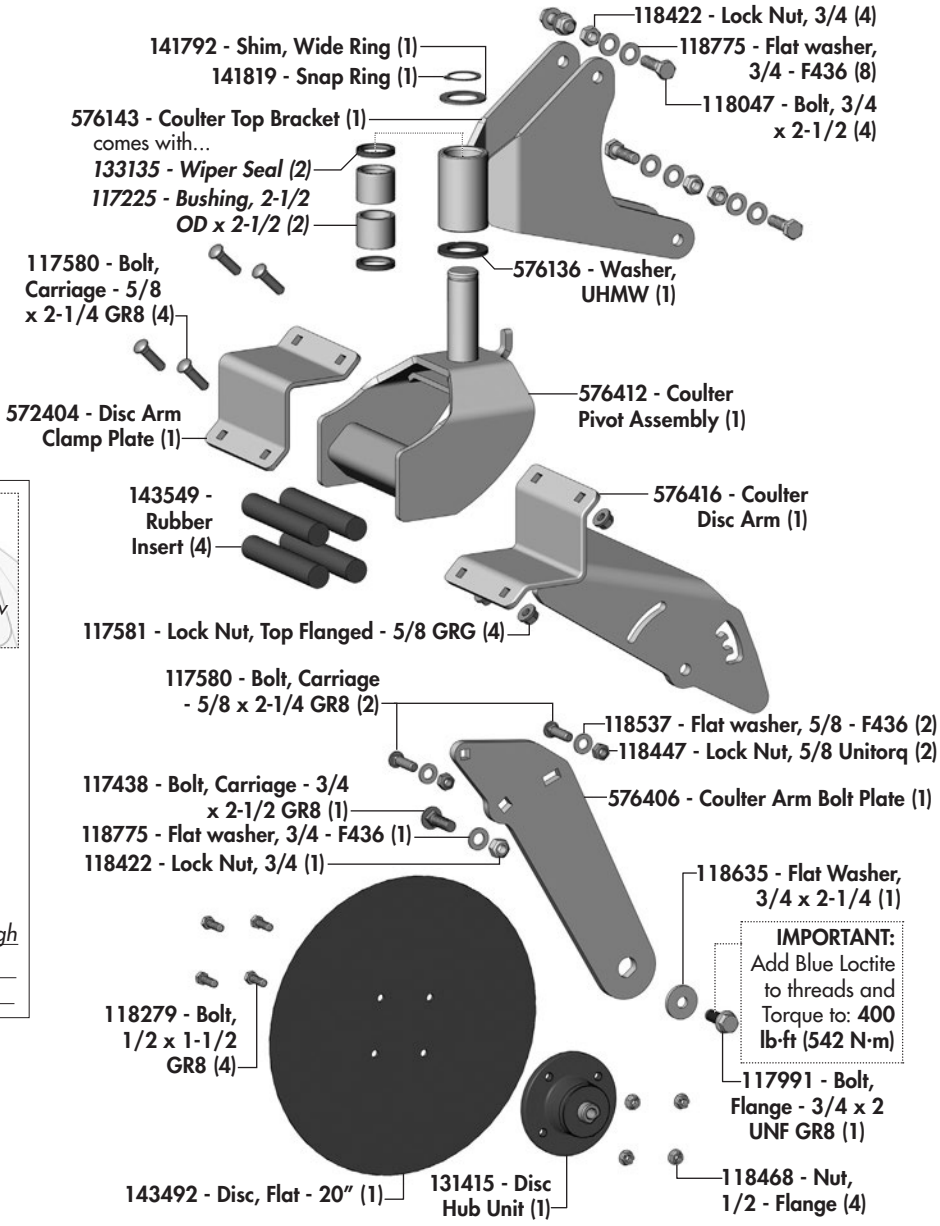

Disc Hub Components

131415 - Disc Hub Unit (Varied Suppliers) - *Replacement O-Rings*

INA - Markings



121080 - O-Ring, Nitrile M6x88 (1)

SKF - Markings



121082 - O-Ring, Nitrile M5.3x87.5 (1)

Optional Chopper Roller Components

Overview of Chopper Roller Options

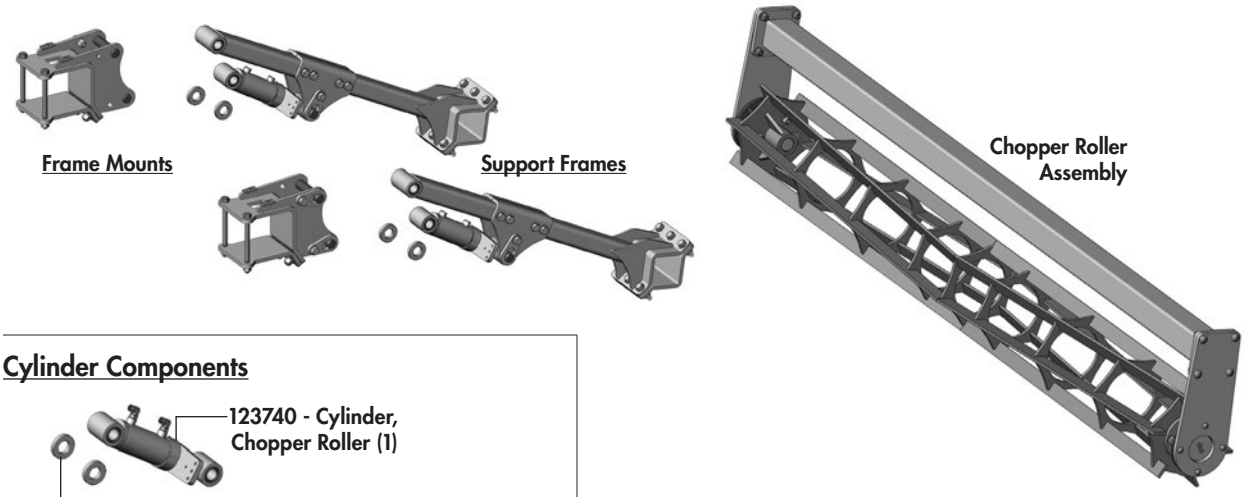

Cylinder Components

Frame Mount Components

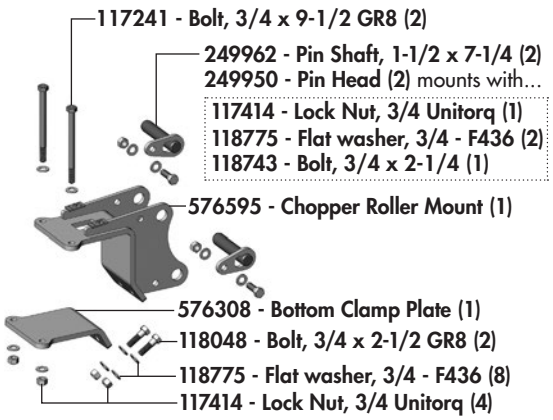

Support Frame Components

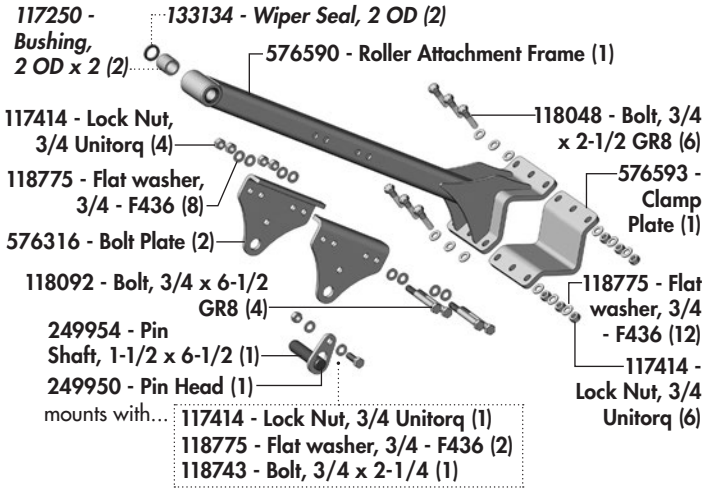

Chopper Roller Components

Chopper Roller Components

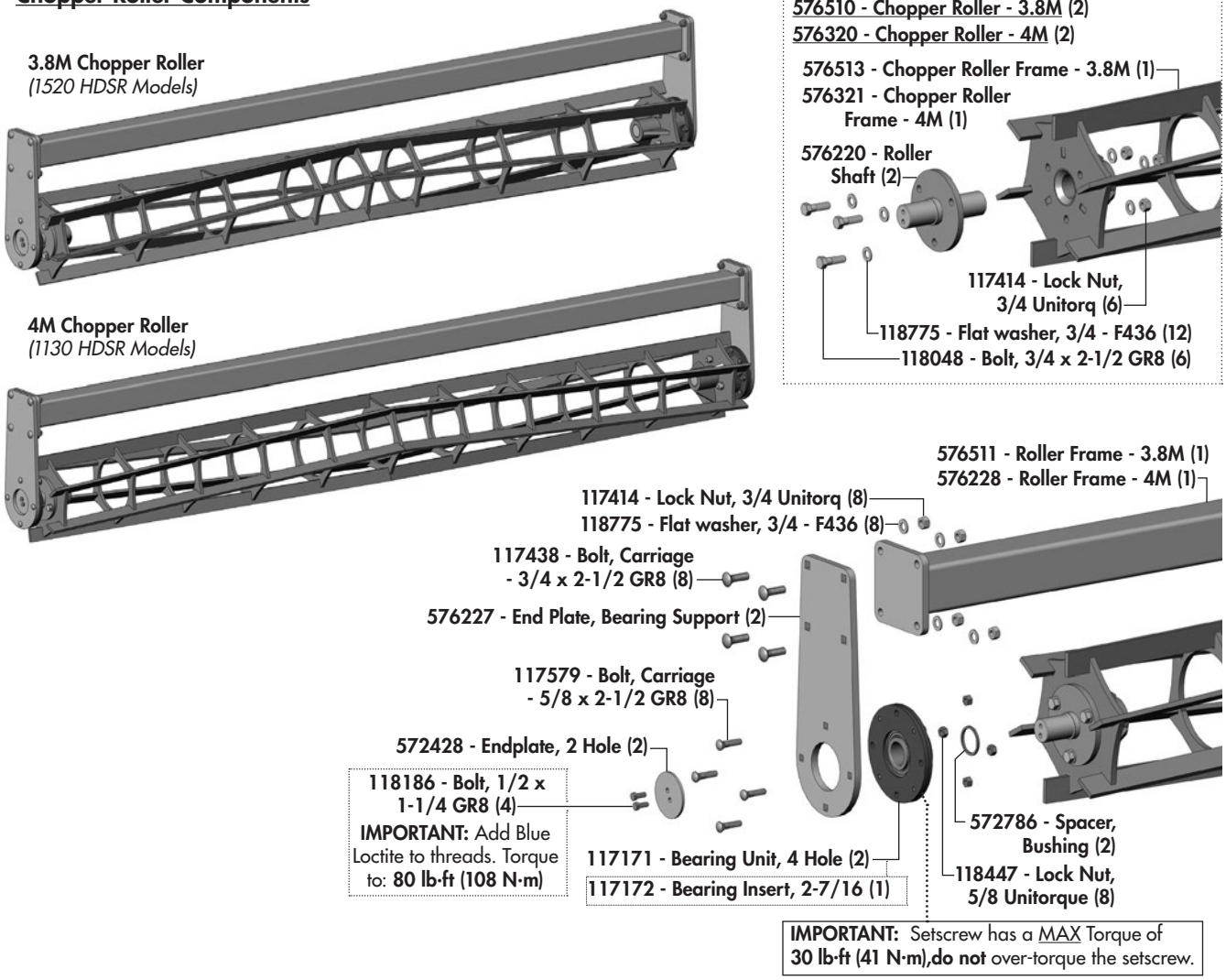

Chopper Roller Positioning

1. Position the inner roller frame endplate ***approx 44"*** away from clamp plate edge *(both sides)*.
2. Use a hold distance of **3-1/4"** between the two roller endplates. *(Adjust the difference equally on both sides if necessary)*.

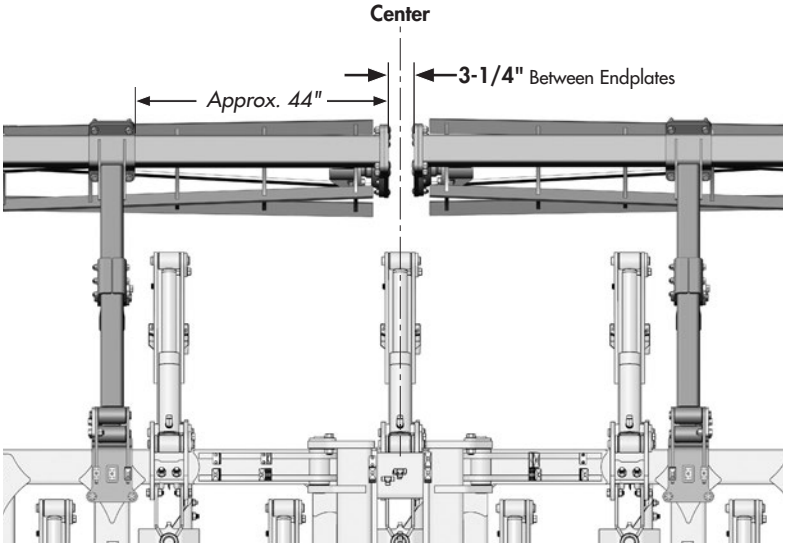

Cylinder & Depth Stop Components

Gauge Wheel Depth Stop Components

RH Gauge Wheel Cylinder Configuration
(with Depth Stops)

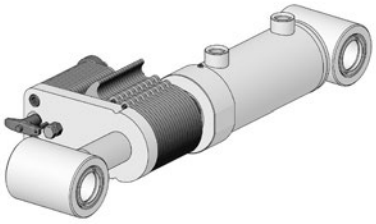

LH Gauge Wheel Cylinder Configuration
(with Depth Stops)

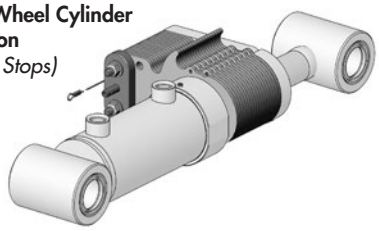

Required for each Gauge Wheel Cylinder *(LH mounts opposite)*

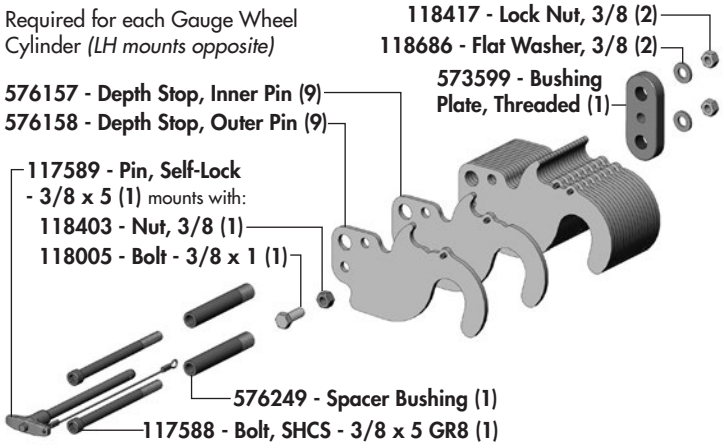

123740 - Gauge Wheel Cylinder - 3 x 4 x 1-1/2 (2)

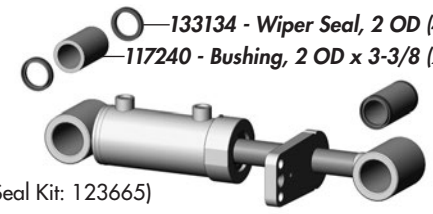

(Seal Kit: 123665)

123175 - Transport Cylinder - 6-1/2 x 32 x 2-1/2 (1)

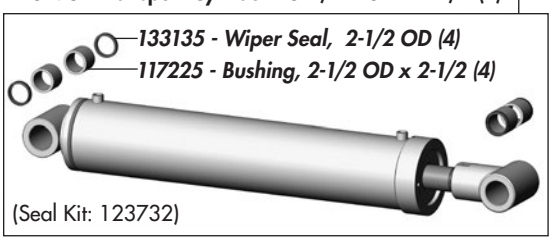

(Seal Kit: 123732)

123193 - Rockshaft Cylinder - 4-1/2 x 16 x 2 (2)

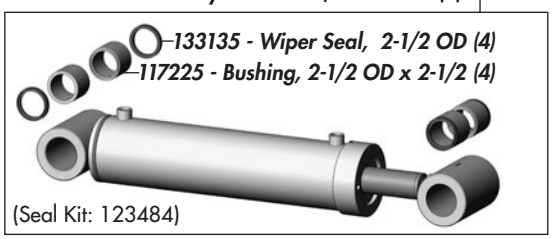

(Seal Kit: 123484)

Maintenance Free Pins & Bushings

⚠ **IMPORTANT:** *INSTALL DRY*

Do NOT use any oil/grease/lubricant on pin or bushing surfaces when installing the maintenance free pins into composite bushings.

123228 - Wing Cylinder - 4 x 20 x 2 (2)

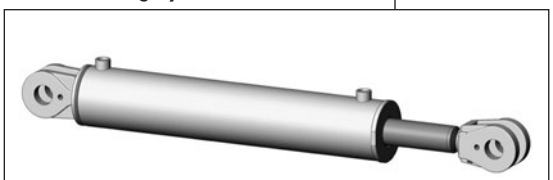

(Seal Kit: 123049)

Wing Cylinder Pins

(Required for each Wing Cylinder)



123420 - Jack Cylinder, 4-1/2 x 8 x 2 (1)

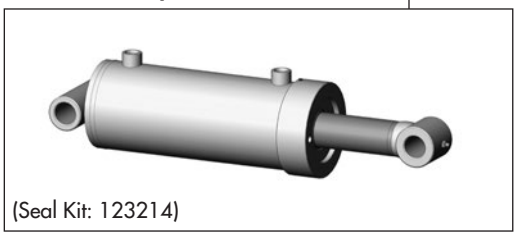

(Seal Kit: 123214)

123177 - Shank Cylinder - 2-1/2 x 10 *(if equipped)*

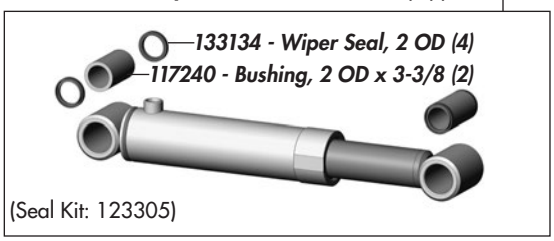

(Seal Kit: 123305)

Hydraulic Layout - 1 - Wheels *(1130/1520)*

Hydraulic Fittings Required

1	141581 - Coupler Tip, 3/4 ORB F	(2)
2	141684 - Coupler, Green (+)	(1)
3	141685 - Coupler, Green (-)	(1)
4	141703 - Adaptor, 1/2 ORB M x ORFS M	(4)
5	141704 - Elbow, 90° 1/2 ORB M x ORFS M	(11)
6	141706 - Tee, 1/2 ORFS M	(4)
7	141711 - 90° Elbow, 1/2 ORFS M x 9/16 ORB M	(1)
8	141727 - Tee, 1/2 ORFS M x F-SW x M	(1)
9	141728 - Tee, 1/2 ORFS M x M x F-SW	(2)
10	141598 - Valve, Remote Stroke Control	(1)
11	141778 - Valve, 1.5:1 Ratio Counterbalance	(1)
12	141743 - Valve, Single Selector	(1)
13	141739 - Elbow, 45° 1/2 ORB M x ORFS M	(2)
14	248385 - Plug, Port, 3/4 ORB M	(1)

Required Hoses for Wheel Cylinders

Hoses, 3/8 - 1/2 ORFS F-SW

199	126228 - Hose, 3/8 x 199	(1)
192	126943 - Hose, 3/8 x 192	(1)
190	126227 - Hose, 3/8 x 190	(1)
179	126226 - Hose, 3/8 x 179	(2)
175	126223 - Hose, 3/8 x 175	(2)
136	126216 - Hose, 3/8 x 136	(1)
110	126727 - Hose, 3/8 x 110	(1)
80	126165 - Hose, 3/8 x 80	(1)
58	126725 - Hose, 3/8 x 58	(2)
32	126899 - Hose, 3/8 x 32	(1)
31	126204 - Hose, 3/8 x 31	(1)
26	126162 - Hose, 3/8 x 26	(1)

Hoses, 3/8 - 1/2 ORFS F-SW x F-90°

80	126211 - Hose, 3/8 x 80	(1)
46	126205 - Hose, 3/8 x 46	(1)

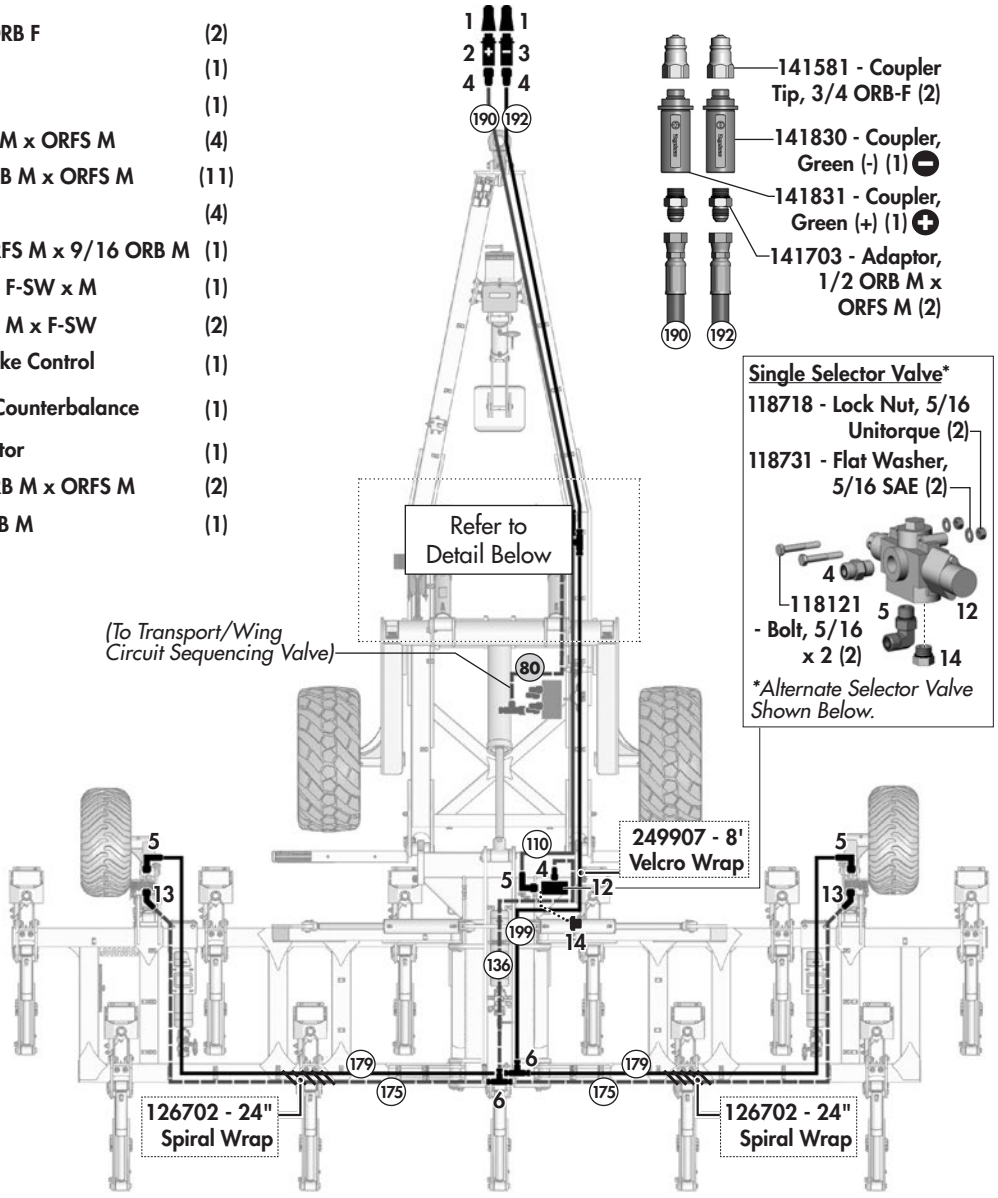

Single Selector Valve*

118718 - Lock Nut, 5/16 Unitorque (2)

118731 - Flat Washer, 5/16 SAE (2)

**Alternate Selector Valve Shown Below.*

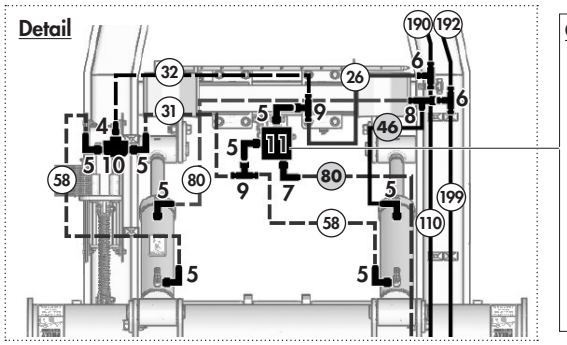

Counterbalance Valve

1.5:1 Ratio

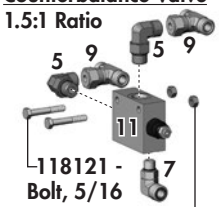

118121 - Bolt, 5/16 x 2 (2)

118718 - Lock Nut, 5/16 Unitorque (2)

Hydraulic Layout - 2 - Hydraulic Shanks *(1130)*

Hydraulic Fittings Required

1	141581 - Coupler Tip, 3/4 ORB F	(2)
2	141832 - Coupler, Blue (+)	(1)
3	141833 - Coupler, Blue (-)	(1)
4	141703 - Adaptor, 1/2 ORB M x ORFS M	(7)
5	141711 - 90° Elbow, 1/2 ORFS M x 9/16 ORB M	(1)
6	141706 - Tee, 1/2 ORFS M	(1)
7	141715 - 90° Elbow, 1/2 ORFS M x F-SW	(3)
8	141705 - 90° Elbow, 1/2 ORB M x ORFS F-SW	(2)
9	141728 - Tee, 1/2 ORFS M x M x F-SW	(1)
10	141781 - Adaptor, 1/2 ORFS M x 5/8 ORB M	(2)
11	141597 - Ball Valve - 3/4 ORB F	(3)
12	141741 - Pressure Gauge	(1)
13	141740 - Valve, Reducing Relieving	(1)
14	141720 - 90° Elbow, 5/8 ORB M x 5/8 ORFS M	(14)
15	141782 - 45° Elbow, 5/8 ORB M x 5/8 ORFS M	(8)
16	141784 - Adaptor, 5/8 ORB M x 1/2 ORB M	(1)
17	141542 - Plug, Port, 5/8 ORB M	(11)
18	141783 - Adaptor, 1 ORB M x 1 ORB M	(3)

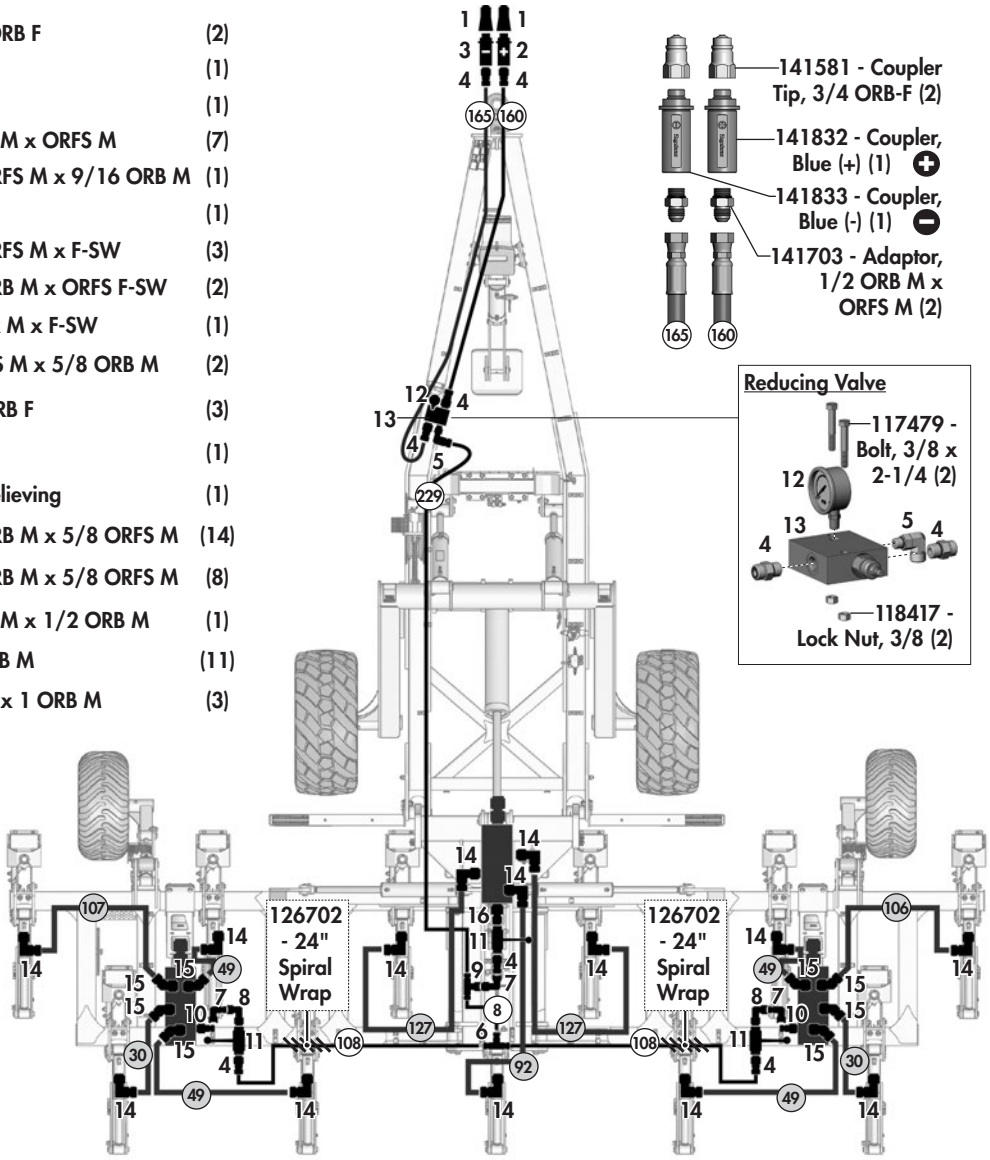

Required Hoses for Shank Cylinders

Hoses, 3/8 - 1/2 ORFS F-SW

229	126230 - Hose, 3/8 x 229	(1)
165	126221 - Hose, 3/8 x 165	(1)
160	126220 - Hose, 3/8 x 160	(1)
108	126215 - Hose, 3/8 x 108	(2)
8	126280 - Hose, 3/8 x 8	(1)

Hoses, 5/8 - 5/8 ORFS F-SW

127	126260 - Hose, 5/8 x 127	(2)
107	126258 - Hose, 5/8 x 107	(1)
106	126257 - Hose, 5/8 x 106	(1)
92	126256 - Hose, 5/8 x 92	(1)
49	126250 - Hose, 5/8 x 49	(4)
30	126243 - Hose, 5/8 x 30	(2)

Wing Frame Accumulator Block Overview

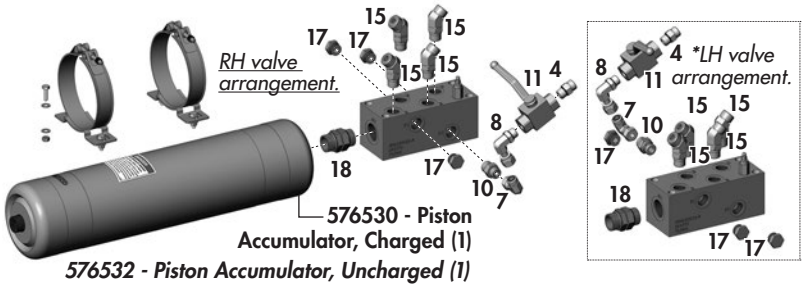

Center Accumulator Block Overview

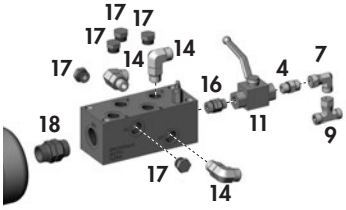

Hydraulic Layout - 2 - Hydraulic Shanks *(1520)*

Hydraulic Fittings Required

1		141581 - Coupler Tip, 3/4 ORB F	(2)
2		141832 - Coupler, Blue (+)	(1)
3		141833 - Coupler, Blue (-)	(1)
4		141703 - Adaptor, 1/2 ORB M x ORFS M	(7)
5		141711 - 90° Elbow, 1/2 ORFS M x 9/16 ORB M	(1)
6		141706 - Tee, 1/2 ORFS M	(1)
7		141715 - 90° Elbow, 1/2 ORFS M x F-SW	(3)
8		141705 - 90° Elbow, 1/2 ORB M x ORFS F-SW	(2)
9		141728 - Tee, 1/2 ORFS M x M x F-SW	(1)
10		141781 - Adaptor, 1/2 ORFS M x 5/8 ORB M	(2)
11		141597 - Ball Valve - 3/4 ORB F	(3)
12		141741 - Pressure Gauge	(1)
13		141740 - Valve, Reducing Relieving	(1)
14		141720 - 90° Elbow, 5/8 ORB M x 5/8 ORFS M	(22)
15		141782 - 45° Elbow, 5/8 ORB M x 5/8 ORFS M	(8)
16		141784 - Adaptor, 5/8 ORB M x 1/2 ORB M	(1)
17		141542 - Plug, Port, 5/8 ORB M	(7)
18		141783 - Adaptor, 1 ORB M x 1 ORB M	(3)

Required Hoses for Shank Cylinders

Hoses, 3/8 - 1/2 ORFS F-SW

229	126230 - Hose, 3/8 x 229	(1)
165	126221 - Hose, 3/8 x 165	(1)
160	126220 - Hose, 3/8 x 160	(1)
103	126214 - Hose, 3/8 x 103	(2)
8	126280 - Hose, 3/8 x 8	(1)

Hoses, 5/8 - 5/8 ORFS F-SW

107	126258 - Hose, 5/8 x 107	(2)
84	126255 - Hose, 5/8 x 84	(1)
69	126254 - Hose, 5/8 x 69	(1)
65	126253 - Hose, 5/8 x 65	(1)
49	126250 - Hose, 5/8 x 49	(4)
33	126245 - Hose, 5/8 x 33	(2)
30	126243 - Hose, 5/8 x 30	(2)

Hoses, 5/8 - 5/8 ORFS F-SW x F-90°

59	126252 - Hose, 5/8 x 59	(1)
56	126251 - Hose, 5/8 x 56	(1)

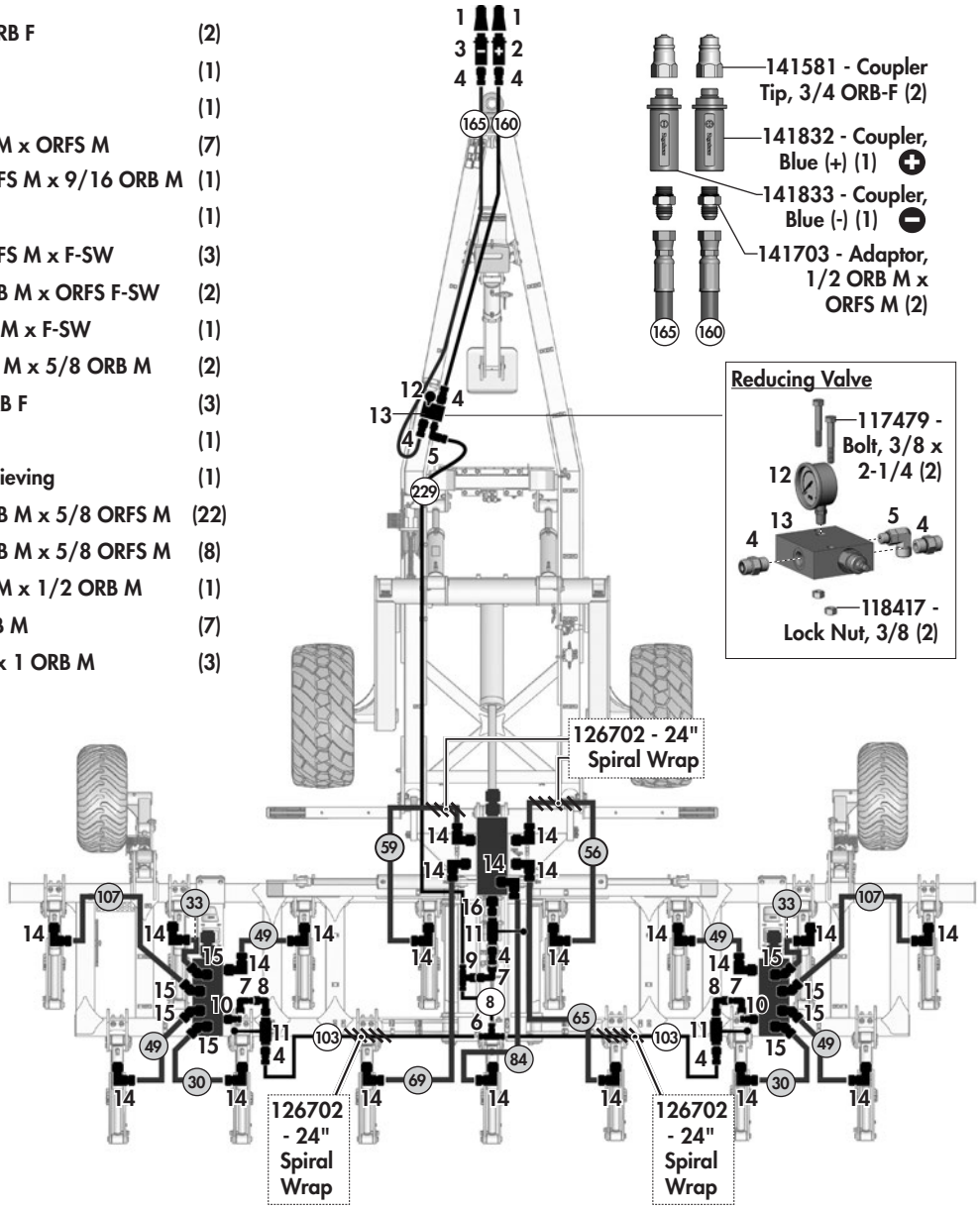

Wing Frame Accumulator Block Overview

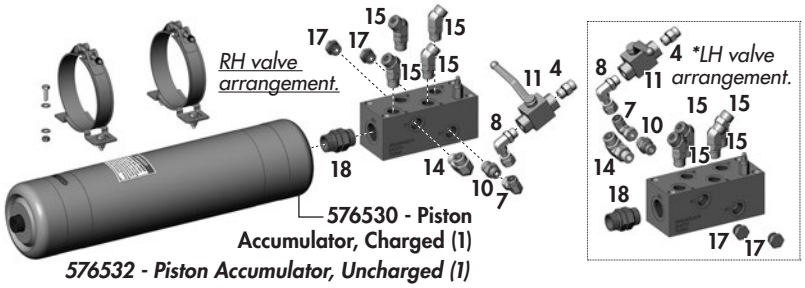

Center Accumulator Block Overview

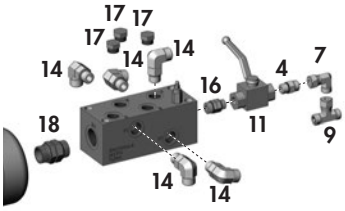

Hydraulic Layout - 2 - Choppers *(1130/1520 - Optional-Hydraulic Trip Version)*

Hydraulic Fittings Required

1	141727 - Tee, 1/2 ORFS M x F-SW x M	(1)
2	141709 - Tee, 1/2 ORB M x 1/2 ORFS M x M	(1)
3	141707 - Tee, 1/2 ORFS M x M x 1/2 ORB M	(1)
4	141703 - Adaptor, 1/2 ORB M x ORFS M	(1)
5	141711 - 90° Elbow, 1/2 ORFS M x 9/16 ORB M	(1)
6	141706 - Tee, 1/2 ORFS M	(5)
7	141704 - Elbow, 90° 1/2 ORB M x ORFS M	(9)
8	141740 - Valve, Reducing Relieving	(1)
9	141728 - Tee, 1/2 ORFS M x M x F-SW	(1)
10	141741 - Pressure Gauge	(1)
11	141597 - Ball Valve - 3/4 ORB F	(1)

Required Hoses for Chopper Cylinders

Hoses, 3/8 - 1/2 ORFS F-SW

229	126276 - Hose, 3/8 x 229	(1)
113	126275 - Hose, 3/8 x 113	(2)
108	126215 - Hose, 3/8 x 108	(2)
46	126272 - Hose, 3/8 x 46	(4)
33	126270 - Hose, 3/8 x 33	(2)
28	126977 - Hose, 3/8 x 28	(2)

Hoses, 3/8 - 1/2 ORFS F-SW x F-90°

7	126234 - Hose, 3/8 x 7	(1)
8	126200 - Hose, 3/8 x 8	(1)
14	126235 - Hose, 3/8 x 14	(1)

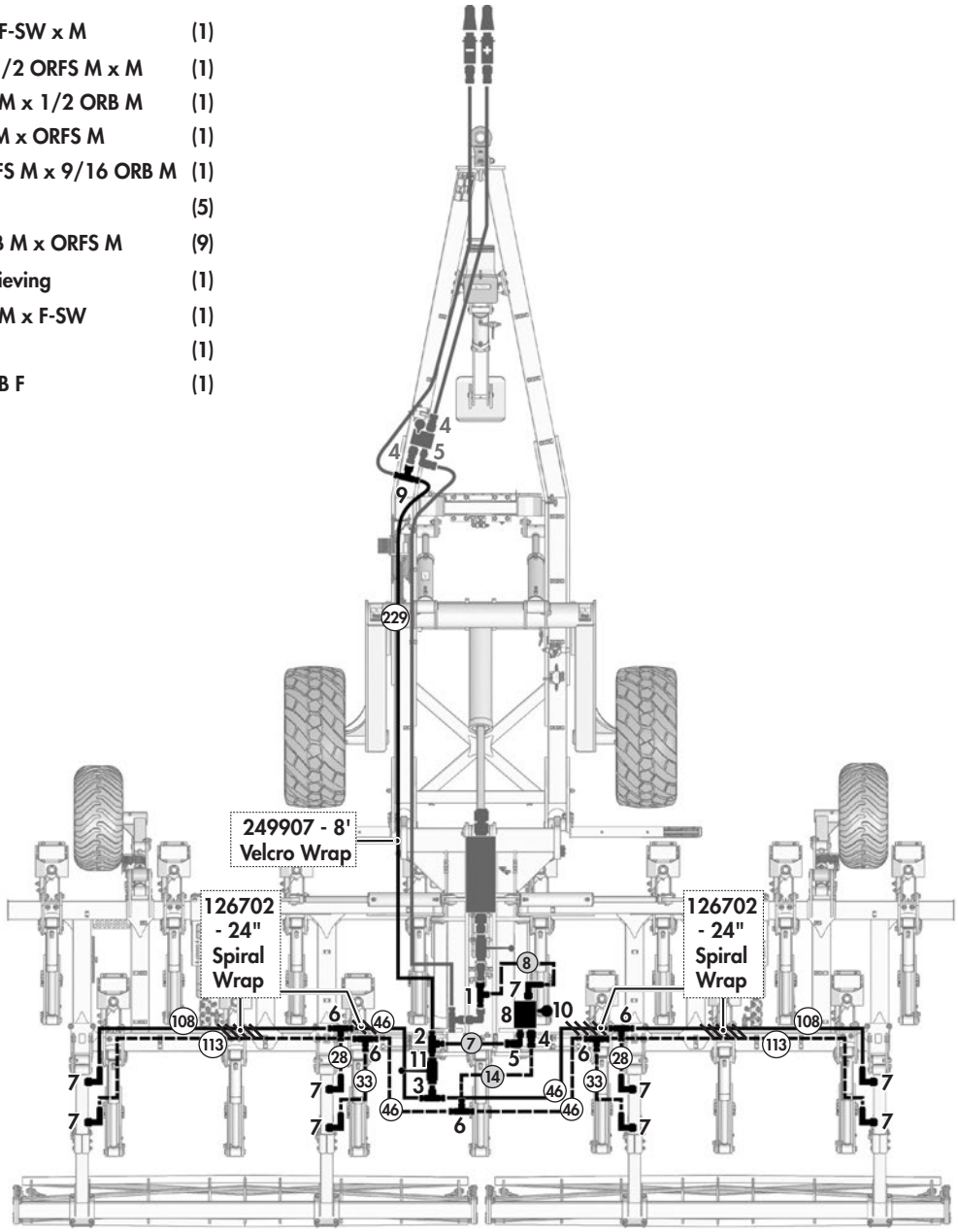

○ Single Hose Block

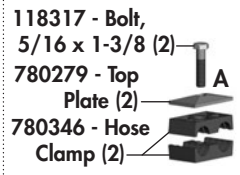

◎ Double Hose Block

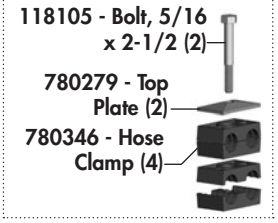

◎ Triple Hose Block

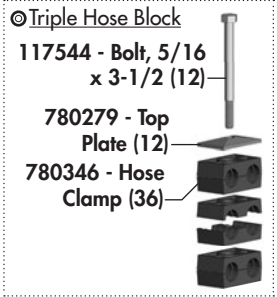

Updated Hose Block Locations

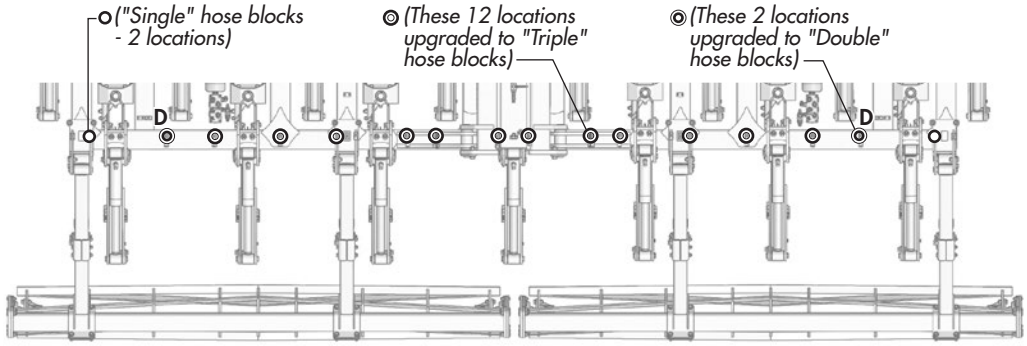

Hydraulic Layout - 2 - Choppers *(1130/1520 - Optional-Spring Trip Version)*

Hydraulic Fittings Required

1	141581 - Coupler Tip, 3/4 ORB F	(2)
2	141832 - Coupler, Blue (+)	(1)
3	141833 - Coupler, Blue (-)	(1)
4	141703 - Adaptor, 1/2 ORB M x ORFS M	(2)
5	141711 - 90° Elbow, 1/2 ORFS M x 9/16 ORB M	(1)
6	141706 - Tee, 1/2 ORFS M	(5)
7	141704 - Elbow, 90° 1/2 ORB M x ORFS M	(10)
8	141709 - Tee, 1/2 ORB M x 1/2 ORFS M x M	(1)
9	141707 - Tee, 1/2 ORFS M x M x 1/2 ORB M	(1)
10	141740 - Valve, Reducing Relieving	(1)
11	141597 - Ball Valve - 3/4 ORB F	(1)

Required Hoses for Chopper Cylinders

Hoses, 3/8 - 1/2 ORFS F-SW

- (390) 126278 - Hose, 3/8 x 390 (1)
- (388) 126864 - Hose, 3/8 x 388 (1)
- (113) 126275 - Hose, 3/8 x 113 (2)
- (108) 126215 - Hose, 3/8 x 108 (2)
- (46) 126272 - Hose, 3/8 x 46 (4)
- (33) 126270 - Hose, 3/8 x 33 (2)
- (28) 126977 - Hose, 3/8 x 28 (2)
- (13) 126867 - Hose, 3/8 x 13 (1)
- (6) 126279 - Hose, 3/8 x 6 (1)

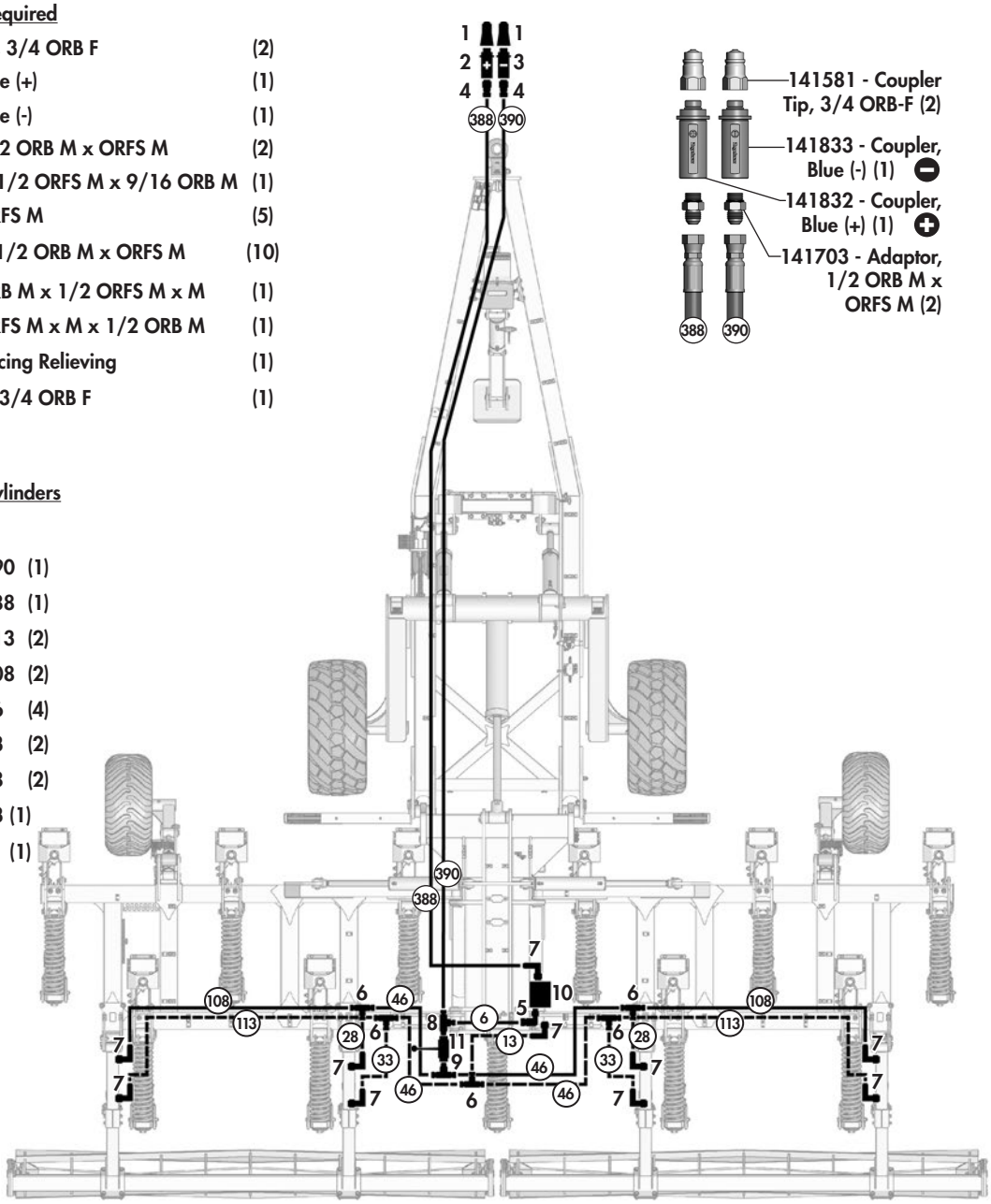

o Single Hose Block

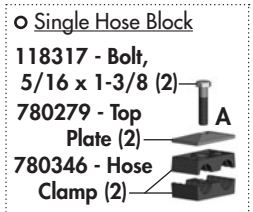

◎ Double Hose Block

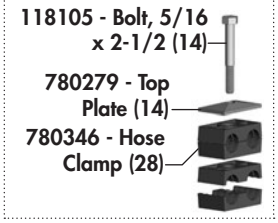

Updated Hose Block Locations

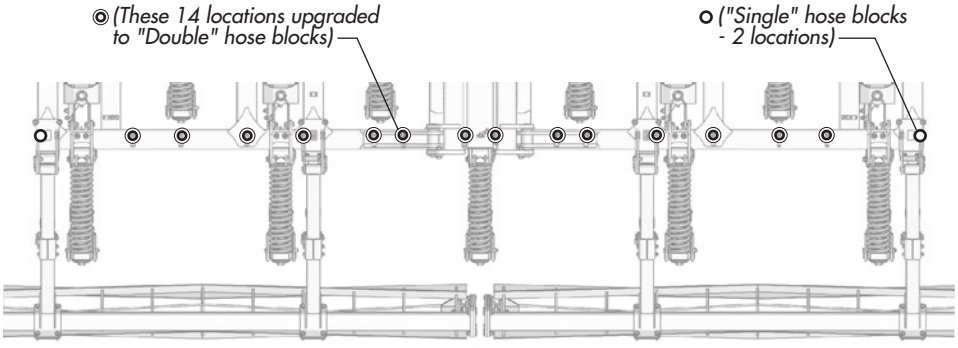

Hydraulic Layout - 3 - Transport / Wings *(1130/1520)*

Hydraulic Fittings Required

1	141581 - Coupler Tip, 3/4 ORB F	(2)
2	141834 - Coupler, Brown (+)	(1)
3	141835 - Coupler, Brown (-)	(1)
4	141703 - Adaptor, 1/2 ORB M x ORFS M	(6)
5	141731 - 90° Elbow, 3/4 ORB M x M	(1)
6	141704 - Elbow, 90° 1/2 ORB M x ORFS M	(7)
7	141706 - Tee, 1/2 ORFS M	(2)
8	141739 - Elbow, 45° 1/2 ORB M x ORFS M	(2)
9	248385 - Plug, Port, 3/4 ORB M	(1)
10	141711 - 90° Elbow, 1/2 ORFS M x 9/16 ORB M	(1)
11	141707 - Tee, 1/2 ORFS M x M x 1/2 ORB M	(1)
12	141727 - Tee, 1/2 ORFS M x F-SW x M	(1)
13	141743 - Valve, Single Selector	(1)
14	141842 - Manifold, 9/16 x 3/4 x 3/4 ORB	(1)
15	141796 - Block, Sequencing Valve	(1)

Required Hoses for Transport/Wing Cylinders

Hoses, 3/8 - 1/2 ORFS F-SW

253	126232 - Hose, 3/8 x 253	(1)
250	126233 - Hose, 3/8 x 250	(1)
96	126836 - Hose, 3/8 x 96	(1)
68	126209 - Hose, 3/8 x 68	(1)
49	126206 - Hose, 3/8 x 49	(2)
30	126835 - Hose, 3/8 x 30	(1)
25	126865 - Hose, 3/8 x 25	(1)
22	126201 - Hose, 3/8 x 22	(1)

Hoses, 3/8 - 1/2 ORFS F-SW x F-90°

89	126213 - Hose, 3/8 x 89	(1)
55	126208 - Hose, 3/8 x 55	(1)
29	126203 - Hose, 3/8 x 29	(1)

(From Wheel Circuit)

80	126211 - Hose, 3/8 x 80	(1)

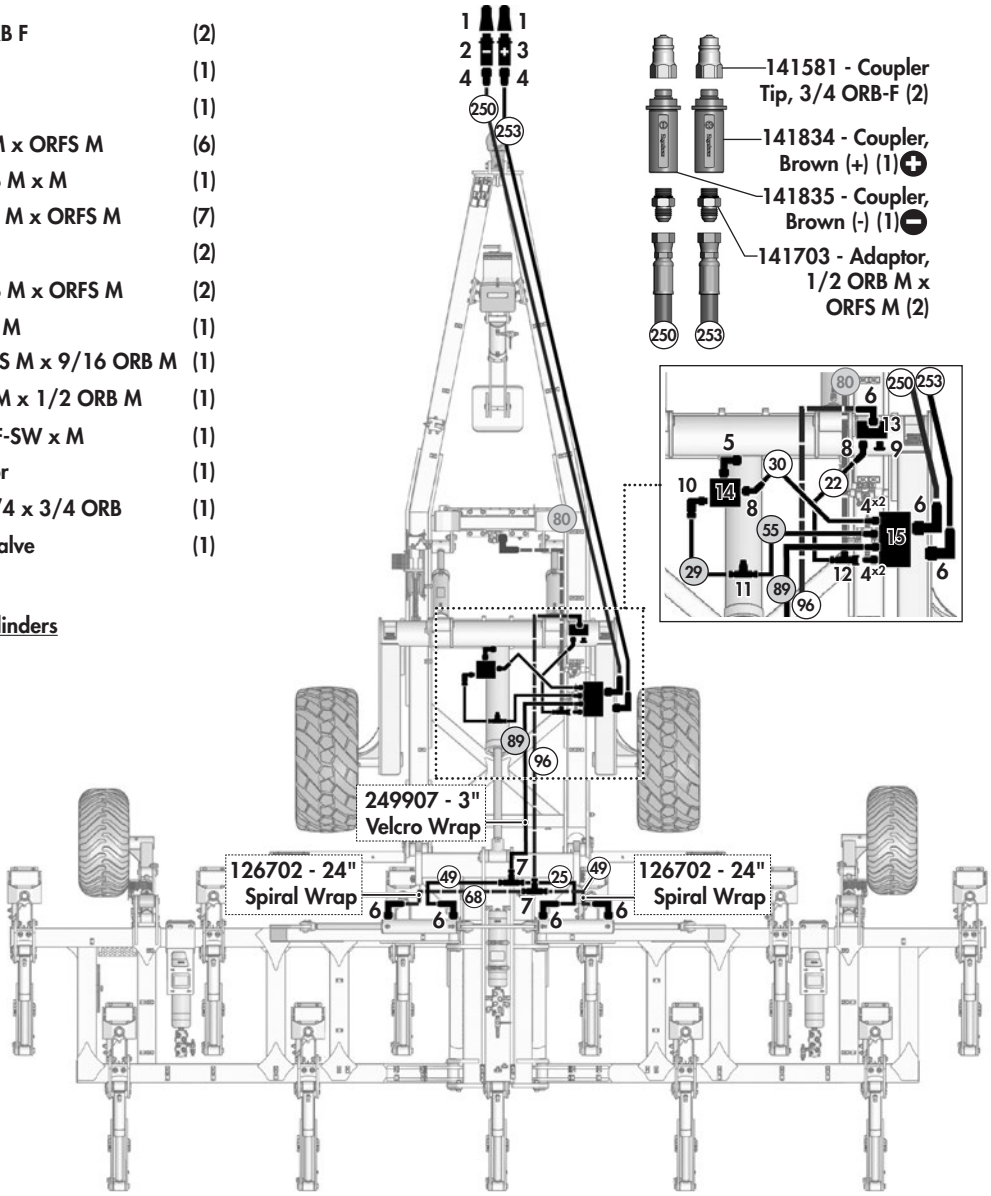

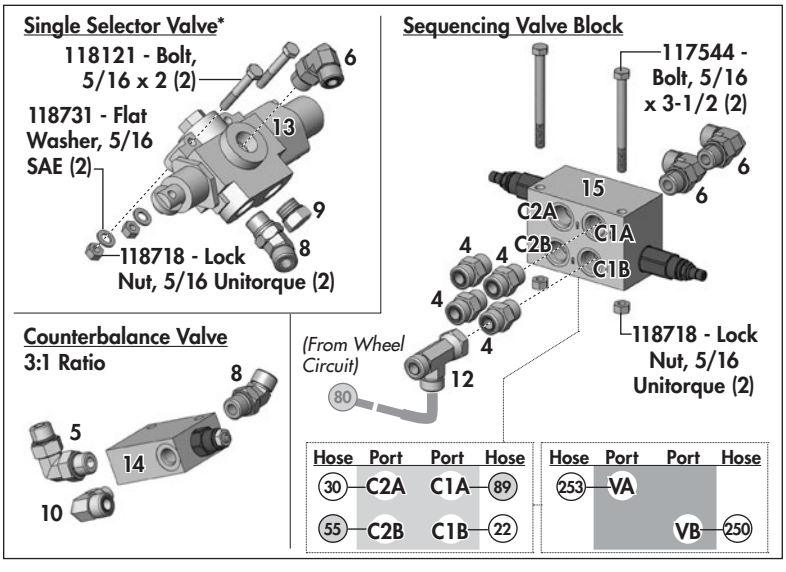

Hydraulic Layout - 4 - Hydraulic Jack

Hydraulic Fittings Required

1	141581 - Coupler Tip, 3/4 ORB F	(2)
2	141838 - Coupler, Grey (+)	(1)
3	141839 - Coupler, Grey (-)	(1)
4	141703 - Adaptor, 1/2 ORB M x ORFS M	(4)
5	141705 - 90° Elbow, 1/2 ORB M x ORFS F-SW	(1)
6	141704 - Elbow, 90° 1/2 ORB M x ORFS M	(1)
7	122668 - Orifice, 3/4-16 UNF	(1)
8	141597 - Ball Valve - 3/4 ORB F	(1)

Required Hoses for Jack Cylinders

Hoses, 3/8 - 1/2 ORFS F-SW

(153) 126219 - Hose, 3/8 x 153 (1)

(136) 126216 - Hose, 3/8 x 136 (1)

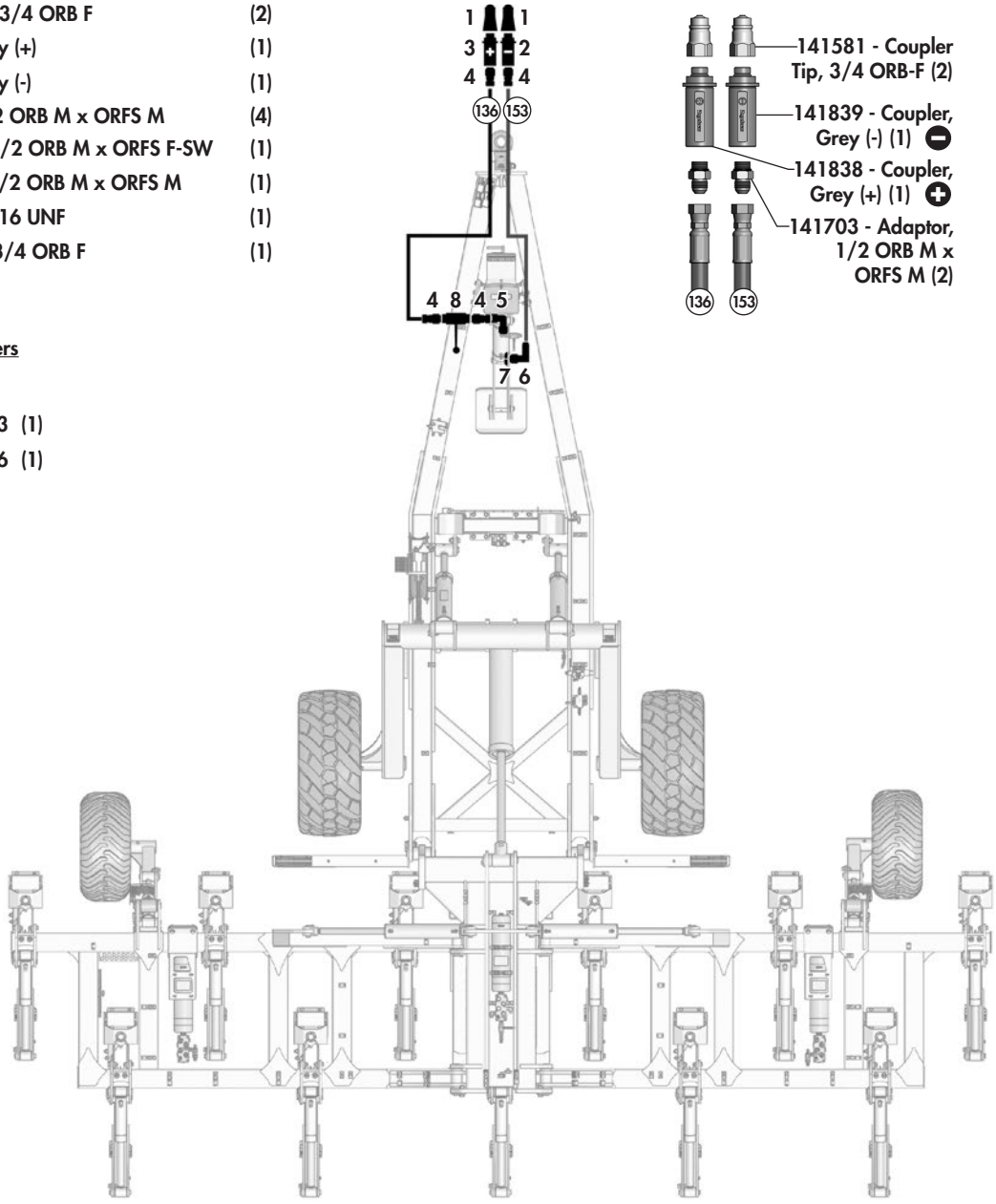

Electrical Routing

Wire Routing Overview

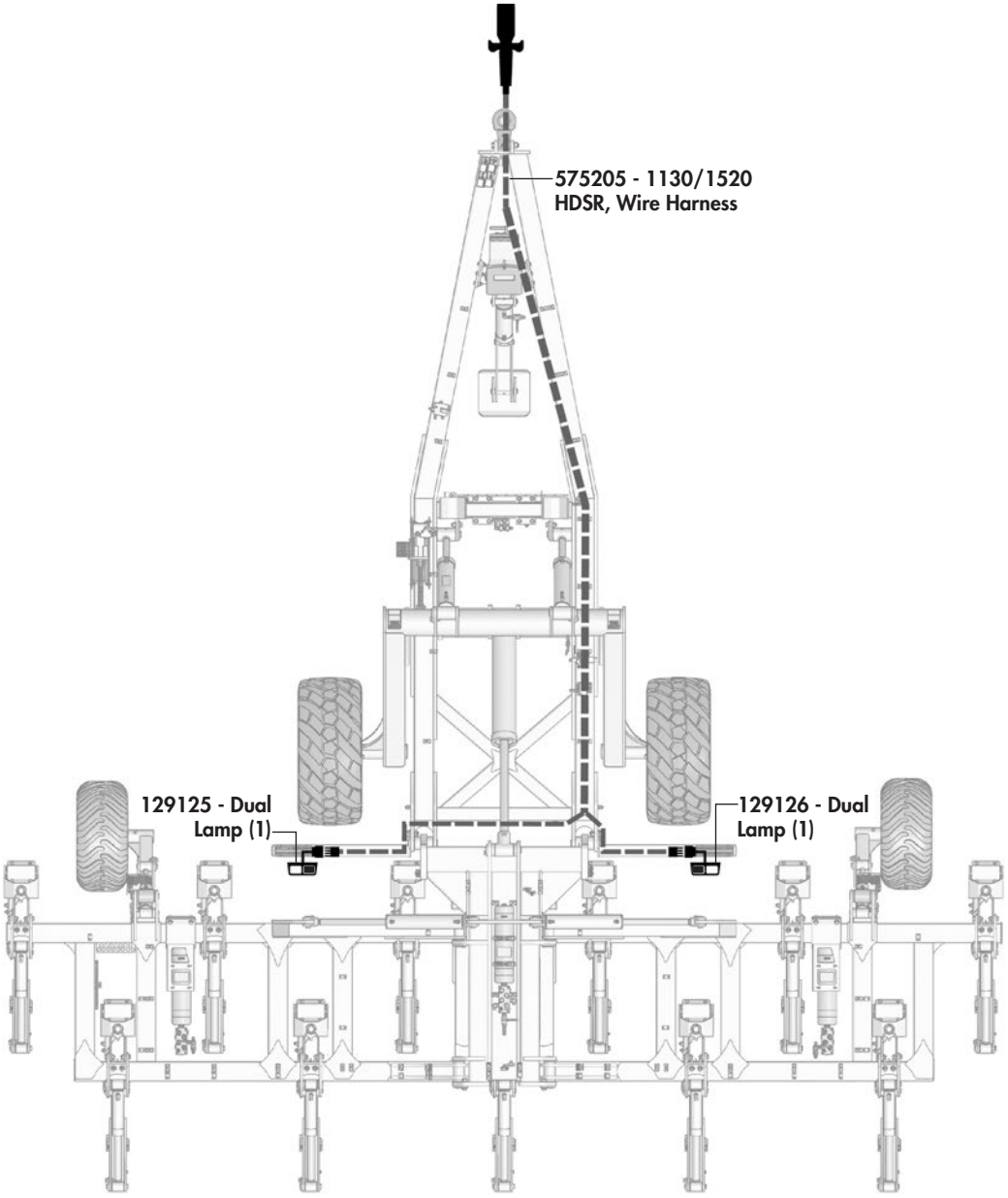

Hydraulic Schematic

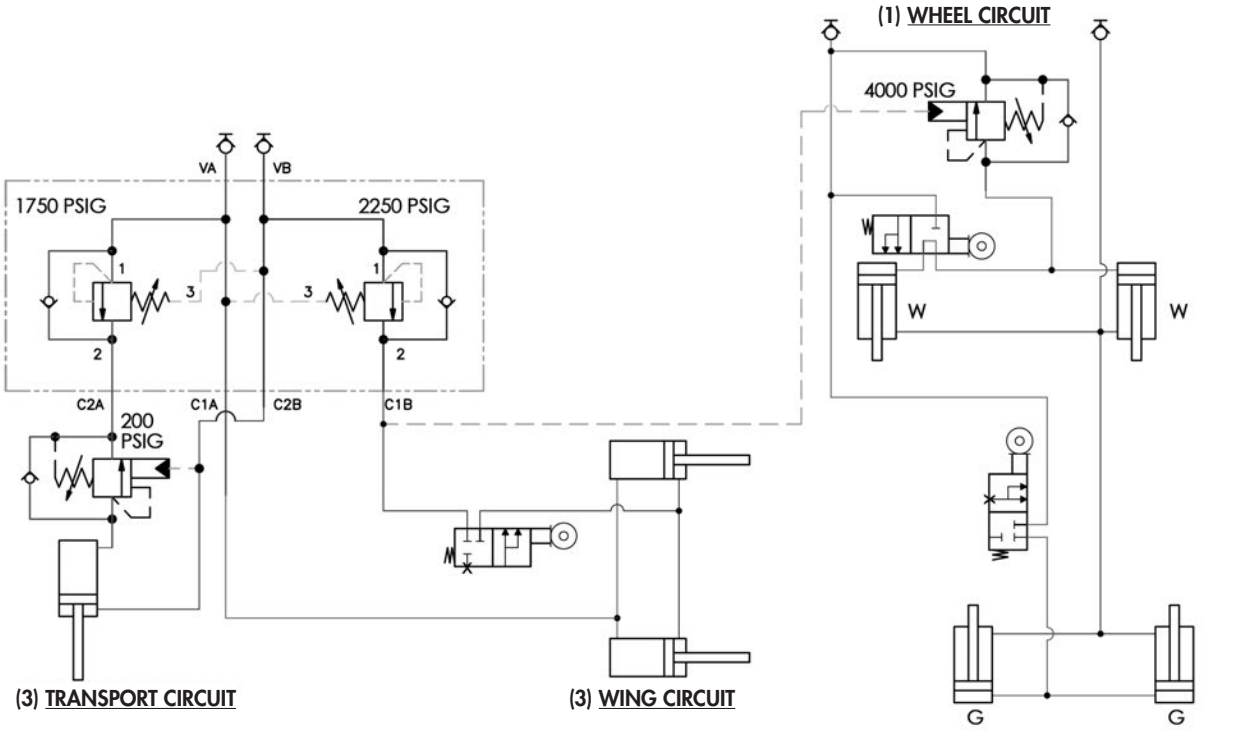

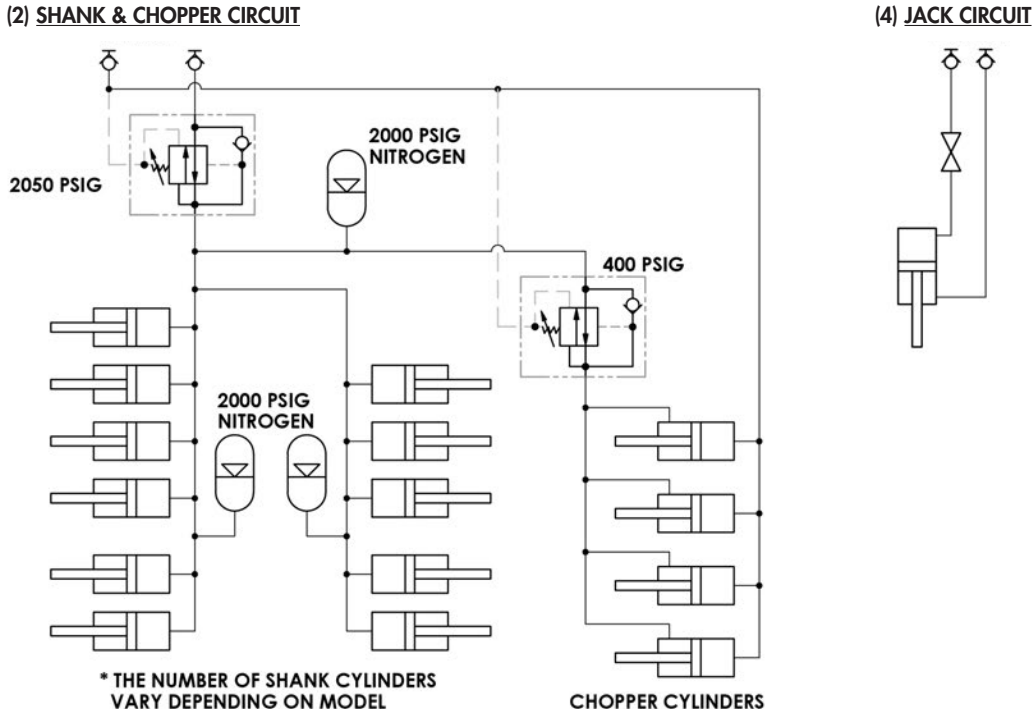

2 Year

Limited Warranty - Agricultural Products

Degelman Industries LP ("Degelman") warrants to the original purchaser of any new Degelman equipment, purchased from an authorized Degelman dealer, that the equipment will be free from defects in material and workmanship for a period of two (2) years from the date of delivery, for non-commercial use (including farm, institutional, government, and municipality) and (1) year from the date of delivery for commercial use. The obligation of Degelman to the purchaser under this warranty is limited to the repair or replacement of defective parts in the first year and to the provision, but not the installation of replacement parts in the second year. Degelman reserves the right to inspect any equipment or parts which are claimed to have been defective in material or workmanship.

This warranty limits its replacement or repair coverage to what is consistent with the warranty of Degelman's suppliers of purchased components.

Replacement or repair parts installed in the equipment covered by this limited warranty are warranted for ninety (90) days from the date of delivery of such part or the expiration of the applicable new equipment warranty period, which ever occurs later. Warranted parts shall be provided at no cost to the user at an authorized Degelman dealer during regular working hours. Warranted replacement parts will either be replaced or rebuilt at Degelman's discretion.

Disclaimer of implied warranties & consequential damages

This warranty shall not be interpreted to render Degelman Industries LP liable for injury, death, property damage or damages of any kind, whether direct, consequential, or contingent to property. Without limiting the generality of the foregoing, Degelman shall not be liable for damages resulting from any cause beyond its reasonable control, including, without limitation, loss of crops, any expense or loss of labour, supplies, rental machinery or loss of use.

No other warranty of any kind whatsoever, express or implied is made with respect to this sale; and all implied warranties of merchantability and fitness for a particular purpose which exceed the obligations set forth in this written warranty are hereby disclaimed and excluded from this sale. This exclusion shall not apply in any jurisdiction where it is not permitted by law.

This limited warranty shall not apply:

1. If, in the sole opinion of Degelman, the unit has been subjected to misapplication, abuse, misuse, negligence accident or incorrect off-site machine set-up.
2. To any goods that have sustained damage or deterioration attributable to a lack of routine maintenance (eg. Check and Re-torque of fastening hardware, Hydraulic fluid purities, drive train alignments, and clutch operation)
3. If parts not made or supplied by Degelman have been used in the connection with the unit, if, in the sole judgement of Degelman such use affects its performance, safety, stability or reliability.
4. If the unit has been altered or repaired outside of an authorized Degelman dealership in a manner which, in the sole judgement of Degelman, affects its performance, safety, stability or reliability.
5. To expendable or wear items such as (eg. Harrow tines, Rock Picker and Rock Rake wear teeth and replaceable bushings and pins.) and any other items that in the company's sole judgement are a wear item.

No employee or representative of Degelman Industries LP is authorized to change this limited warranty in any way or grant any other warranty unless such change is made in writing and signed by the Degelman Service Manager.

This limited warranty is subject to any future availability of supply, which may directly affect Degelman's ability to obtain materials or manufacture replacement parts.

Degelman reserves the right to make improvements in design or changes in specifications at any time, without incurring obligations to owners of equipment previously delivered.

This limited warranty is subject to compliance by the customer to the enclosed *Retail Customer's Responsibility Under Degelman Warranty.*

Warranty

Retail Customer's Responsibility Under Degelman Warranty.

It is the retail customer and/or Operator's responsibility to read the Operator's Manual, to operate, lubricate, maintain and store the equipment in accordance with all instructions and safety procedures. Failure of the operator to read the operators manual is a misuse of this equipment.

It is the retail customer and/or operators responsibility to inspect the product and to have any part(s) repaired or replaced when continued operation would cause damage or excessive wear to other parts or cause safety hazard.

It is the retail customer's responsibility to deliver the product to the authorized Degelman dealer, from whom he purchased it, for service or replacement of defective parts, which are covered by warranty. Repairs to be submitted for warranty consideration must be made within forty-five days of failure.

It is the Retail Customer's responsibility for any cost incurred by the dealer for hauling of the product for the purpose of performing a warranty obligation or inspection.

WARRANTY INFORMATION

Make certain the warranty registration card has been forwarded to:

Degelman Industries LP
Box 830 - 272 Industrial Dr.
Regina, SK, Canada
S4P 3B1

Always give your dealer the serial number of your Degelman product when ordering parts or requesting service or other information.

The serial number is located on the machine as shown in the diagram below. In the space provided record the model number, the serial number and the date of purchase to assist your dealer in providing you with prompt and efficient service.

SERIAL NUMBER: _____

MODEL NUMBER: _____

DATE OF PURCHASE: _____

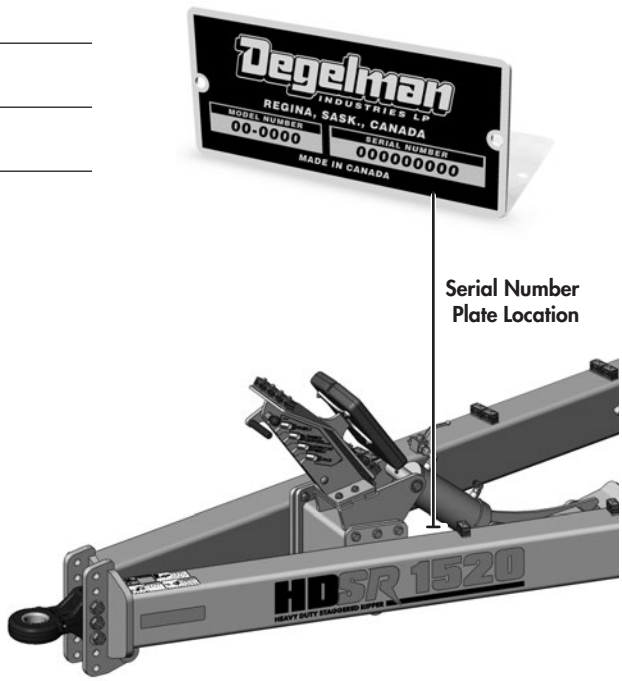

© 2026 Degelman Industries LP