Degelman

OPERATOR & PARTS MANUAL

REV1500

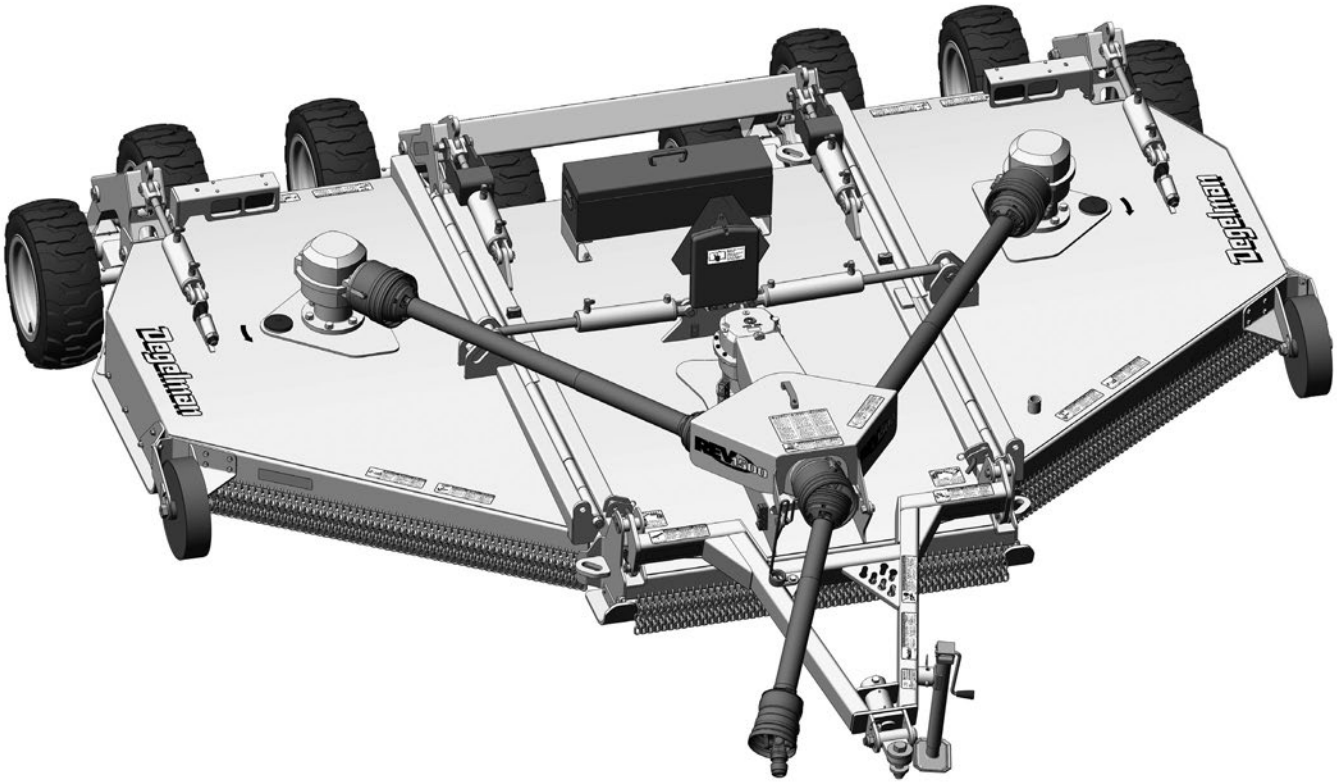

rotary cutter

143619 v1.0

DEGELMAN INDUSTRIES LP
BOX 830-272 INDUSTRIAL DRIVE,
REGINA, SK, CANADA, S4P 3B1
FAX 306.543.2140 PH 306.543.4447
1.800.667.3545 DEGELMAN.COM

REV 1000|1500 ROTARY CUTTER

SN: RC2131 and up

Degelman

REV1500

OPERATORS SECTION - TABLE OF CONTENTS

Introduction **1**

Safety **3**

Operation

How To Set Your Tractor 6
How To Hook-Up Your Cutter 7
Cutter Preparation 9
How To Set Your Cutter 10
How To Operate Your Cutter 13
Transporting 15

Service & Maintenance

Troubleshooting 17
Maintenance & Service 21
How To Store Your Cutter 31

PARTS SECTION - TABLE OF CONTENTS

Part Assemblies & Components

Part Overview 35
Hitch Assembly & Center Shield 36
RH/LH Wing Assemblies 37
Center Frame Assembly 38
Wing Wheel Strut Assemblies 40
Rockshaft Assembly 41
Hub & Spindle Assemblies 42
Blades, Pan, & Hardware 43

Cylinders & Hydraulic Routing **44**

Driveline Overview **47**

Gearbox Overview **55**

Options **65**

Light Components **66**

Warranty **67**

DEGELMAN INDUSTRIES LP
BOX 830-272 INDUSTRIAL DRIVE,
REGINA, SK, CANADA, S4P 3B1
FAX 306.543.2140 PH 306.543.4447
1.800.667.3545 DEGELMAN.COM

⚠ IMPORTANT:



READ MANUAL

Introduction

WELCOME

Degelman is proud to welcome you to our rapidly increasing family of high quality and dependable product owners. This product was designed and built specifically for you, the customer. Through our research and with your input and feedback, we present to you our REV1500/1000 Rotary Cutters.

Designed with durability, safety, and performance in mind, this rotary cutter is ready for years of quality service. In order to help you keep your rotary cutter in top operating condition we have provided you with this manual.

ABOUT THIS MANUAL

This manual has been designed to help you with three extremely important issues: **Operation, Safety, and Maintenance.** It is strongly recommended that you read through the entire manual and review it annually for:

- your own personal safety.
- the safety of others.
- helpful and effective operation techniques.
- maintenance procedures.
- preventative maintenance.

Your authorized Degelman dealer can be contacted for ordering any replacement parts, decals, or manuals. Since many of our parts are specially designed specifically for this Rotary Cutter we strongly recommend you always replace them with genuine Degelman parts only.

This manual and its contents were current at the time of its first printing. To increase product performance and operation, some part modifications and changes may occur that are not reflected in this manual.

Note: *The description "Right"or"Left" as used in this manual is determined by the direction the tractor will travel while in use (unless otherwise stated).*

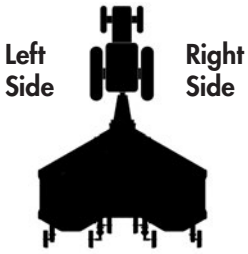

PROOF OF OWNERSHIP

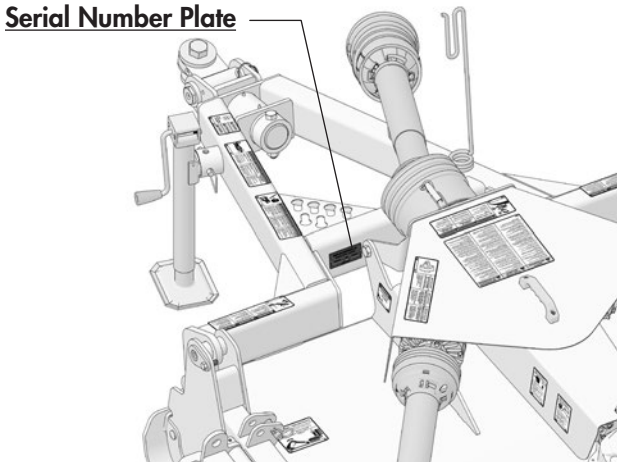

Your **serial number** is found on the serial number plate attached to the cutter on the front left side of the cutter near the driveline shield (shown in the photo above).

It is important to record the serial and model number of your cutter for proof of ownership and for any required service or maintenance assistance.

Serial Number _____

Owner _____

Model _____

PTO Speed: ☐ **540 RPM** ☐ **1000 RPM**

DESCRIPTION

The **REV1500 Rotary Cutter** consists of one center assembly and two wing sections. The overall cutting width is 15 feet. ***(REV1000** width is 10 feet)*

Wing angle and machine cutting height are independently controlled with hydraulic cylinders. The cutter maintains a level cut at all cutting heights with our self-leveling system and unique double acting suspension.

Why is SAFETY important to YOU?

3 BIG Reasons:

- **Accidents Can Disable and Kill**
- **Accidents Are Costly**
- **Accidents Can Be Avoided**



SAFETY ALERT SYMBOL

The **Safety Alert Symbol** identifies important safety messages applied to the REV Rotary Cutter and in this manual. When you see this symbol, be alert to the possibility of **injury or death**. Follow the instructions provided on the safety messages.

The **Safety Alert Symbol** means:

ATTENTION!
BECOME ALERT!
YOUR SAFETY IS INVOLVED!

SIGNAL WORDS

Note the use of the Signal Words: **DANGER**, **WARNING**, and **CAUTION** with the safety messages. The appropriate Signal Word has been selected using the following guidelines:

DANGER

DANGER: Indicates an imminently hazardous situation that, if not avoided, **WILL** result in death or serious injury if proper precautions are not taken.

WARNING

WARNING: Indicates a potentially hazardous situation that, if not avoided, **COULD** result in death or serious injury if proper precautions are not taken.

CAUTION

CAUTION: Indicates a potentially hazardous situation that, if not avoided, **MAY** result in minor or moderate injury if proper practices are not taken, or, serves as a reminder to follow appropriate safety practices.

SAFETY

⚠ **Peligro:** *Si no lee Ingles, pida ayuda a alguien que si lo lea para que le traduzca las medidas de serguridad.*



⚠ **Danger:** *Si vous ne compreniez pas l'anglais, demanderiez à quelqu'un qui comprend l'anglais pour traduire tous les messages de sécurité qui se trouve dans ce manuel.*

⚠ **Danger:** *Do not operate the tractor or rotary cutter until you have fully read and completely understand this operators manual, your tractor's operators manual, and all the safety messages found within these manuals, on the products, or other included materials.*

YOU are responsible for the safe operation and maintenance of your Degelman Rotary Cutter. **YOU** must ensure that you and anyone else who is going to operate, maintain or work around the Rotary Cutter be familiar with the operating and maintenance procedures and related **SAFETY** information contained in this manual and is qualified to operate the machine. An untrained operator exposes himself and bystanders to possible serious injury or death.

Remember, **YOU** are the key to safety. Good safety practices not only protect you but also the people around you. Make these practices a working part of your safety program. Be certain that **EVERYONE** operating this equipment is familiar with the recommended operating and maintenance procedures and follows all the safety precautions. Most accidents can be prevented. Do not risk injury or death by ignoring good safety practices.

- Owners must give operating instructions to operators or employees before allowing them to operate the Rotary Cutter, and at least annually thereafter per OSHA regulation 1928.51.
- The most important safety device on this equipment is a SAFE operator. It is the operator's responsibility to read and understand ALL Safety and Operating instructions in the manual and to follow these. All accidents can be avoided.
- Do not modify the equipment in any way. Unauthorized modification may impair the function and/or safety and could affect the life of the equipment.
- **Think SAFETY! Work SAFELY**!

GENERAL SAFETY



1. Read and understand the Operator's Manual and all safety signs before operating, maintaining or adjusting.
2. Install and properly secure all shields and guards before operating. Use hitch pin with a mechanical locking device.



3. Have a first-aid kit available for use and know how to use it.



4. Be prepared if a fire starts. Have a fire extinguisher available for use should the need arise and know how to use it.
5. Keep emergency numbers for doctor, hospital, ambulance, and fire department near your phone.
6. Wear appropriate protective gear. This list includes but is not limited to:
   - A hard hat
   - Protective shoes with slip resistant soles
   - Protective glasses or goggles
   - Heavy gloves
   - Wet weather gear
   - Hearing protection
   - Respirator or filter mask
   - Wear close fitting clothing to help prevent accidental entanglement.

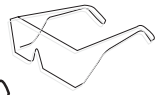



7. Loss of hearing or hearing impairment may result from prolonged exposure to loud noise. Wear suitable hearing protective devices such as earmuffs or earplugs to protect your hearing.
8. Safely operating this equipment requires the full attention of the operator. Do not wear radio or music headphones, or talk on your phone while operating this machine. Never operate while under the influence of alcohol or drugs or allow anyone under the influence to operate the tractor or rotary cutter.
9. Clear the area of people, especially small children, and remove foreign objects from the machine before starting and operating.
10. Do not allow riders.
11. Stop tractor engine, set park brake, remove ignition key and wait for all moving parts to stop before approaching, servicing, adjusting, repairing or unplugging equipment.
12. Review safety related items with all operators annually.

Read and Understand all Safety Decals BEFORE Operating

SAFETY DECALS

⚠ IMPORTANT:

- Understanding and following the information found on these safety decals can save your life and extend the life expectancy of your cutter.
- Keep safety signs and decals clean and legible at all times.
- If safety signs or decals are missing or illegible they must be replaced.
- If repair work causes any decals to be damaged or removed they must be replaced.
- Safety decals for replacement are available by request. Call toll free: 1.800.667.3545

Decal Part # - 143124

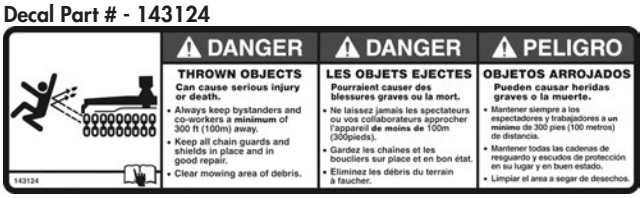

Decal Part # - 143126

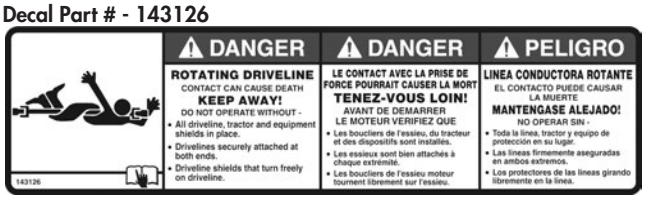

Decal Part# - 143127

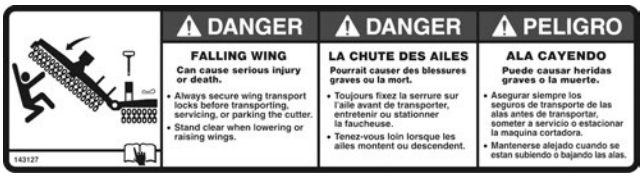

Decal Part # - 143129



Decal Part # - 143171

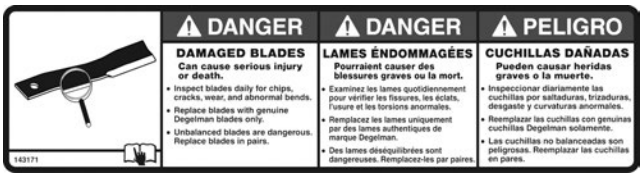

Decal Part # - 143125

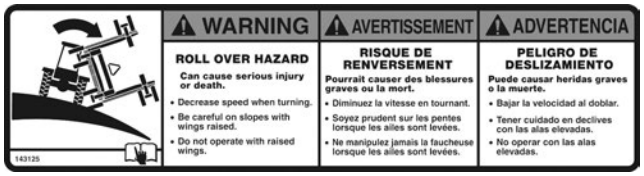

Decal Part # - 143128



Decal Part # - 143130

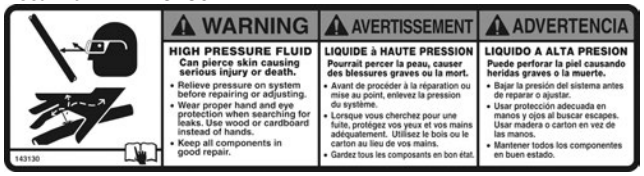

Decal Part # - 142557 - Amber Reflector 2 x 9

Decal Part # - 142650 - Fluorescent Reflector 2 x 9

Decal Part # - 142556 - Red Reflector 2 x 9

Decal Part # - 143146

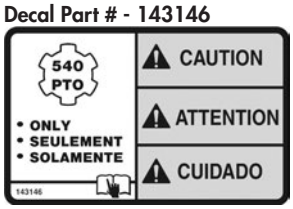

Decal Part # - 143147



Decal Part # - 143148



Safety - Decal Locations

DECAL LOCATION OVERVIEW

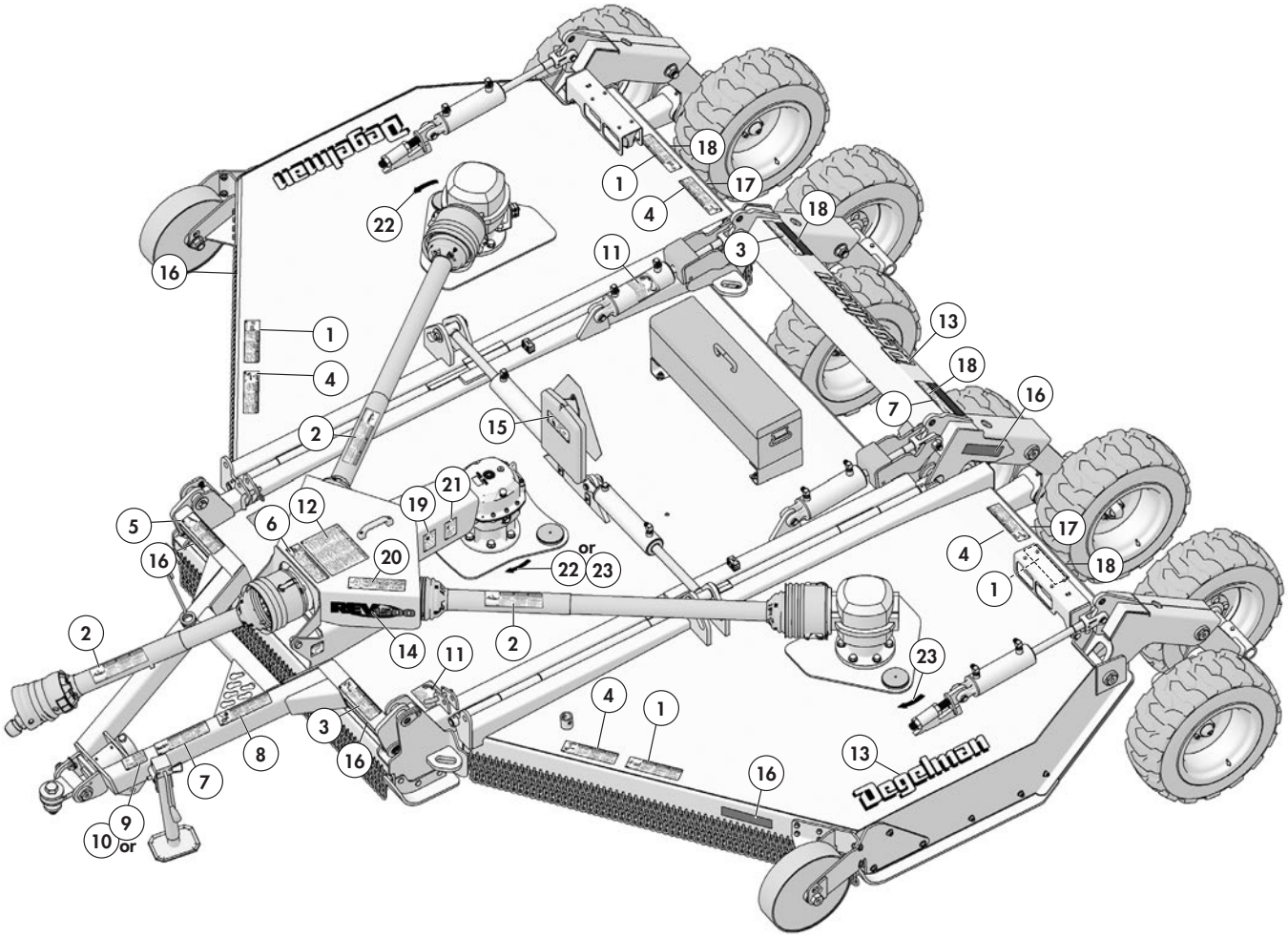

1	143124 - Decal, Danger - Thrown Objects (4)	
2	143126 - Decal, Danger - Rotating Driveline (3)	
3	143127 - Decal, Danger - Falling Wing (2)	
4	143129 - Decal, Danger - Rotating Blade (4)	
5	143171 - Decal, Danger - Damaged Blades (1)	
6	143125 - Decal, Warning - Rollover Hazard (1)	
7	143128 - Decal, Warning - Crushing Hazard (2)	
8	143130 - Decal, Warning - High Pressure Fluid (1)	
9	143146 - Decal, Caution - 540 RPM PTO Only (1)	
10 or	143147 - Decal, Caution - 1000 RPM PTO Only (1)	
11	143131 - Decal, Important - Before Transporting (2)	
12	143148 - Decal, Mower Safety Instructions (1)	

13	142008 - Decal, Degelman Decal - 6 x 25-3/4 (3)	
14	143267 - Decal, REV1500 (2)	
or	*143284 - Decal, REV1000 (2)*	
15	143162 - Decal, Read Operators Manual (1)	
16	142557 - Decal, Amber Reflector Decal - 2 x 9 (6)	
17	142650 - Decal, Fluorescent Reflector - 2 x 9 (2)	
18	142556 - Decal, Red Reflector Decal - 2 x 9 (4)	
19	143261 - Decal, Important - Gearbox Lube (1)	
20	143264 - Decal, Important - Slip Clutch (1)	
21	143265 - Decal, Important - Torque Gearbox (1)	
22	143136 - Decal, Direction Arrow - Counter-Clockwise (2)	
23	143167 - Decal, Direction Arrow - Clockwise (2)	

Counterweight decals for REV1000 models *(left-hand shown)*

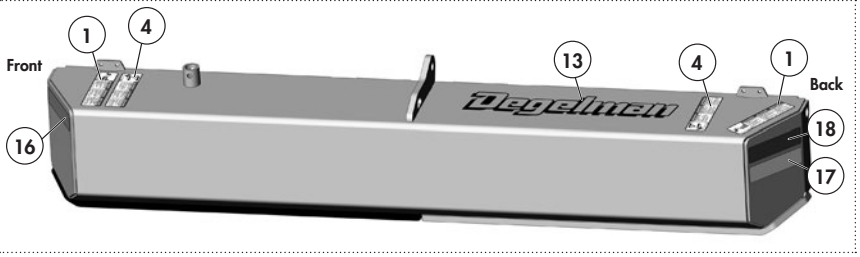

How To Set Your Tractor

TRACTOR REQUIREMENTS

We recommend a tractor with all of the following requirements:

- A full cab or at least one with ROPS (Rollover Protective System).
- A working seat belt.
- At least 100 PTO HP.
- A minimum static vertical load rating of drawbar of 2100 lbs or greater.

CORRECT PTO SPEED

The rotary cutter is available in either a 540 rpm PTO speed or a 1000 rpm PTO speed. Many tractors are equipped with both 540 and 1000 rpm PTO modes. Be sure that the PTO speed of the tractor matches the rotary cutter's gearbox speed.

CAUTION: *Under no circumstances should you try to operate a 540 rpm PTO cutter with a 1000 rpm PTO tractor, and likewise do not operate a 1000 rpm PTO cutter with a 540 rpm PTO tractor. Do not use PTO adapters. PTO adaptors will cause driveline failure and possible tractor damage, it will also invalidate your warranty.*

IMPORTANT: *Do not use on a tractor equipped with a PTO shaft adapter to prevent mismatching of PTO speeds and over telescoping of the driveline.*

POSITIONING TRACTOR DRAWBAR

1. Remove drawbar side locking pins and move drawbar into center position.
2. Install drawbar locking pins.
3. Remove clevis or hammer strap assembly, if equipped.

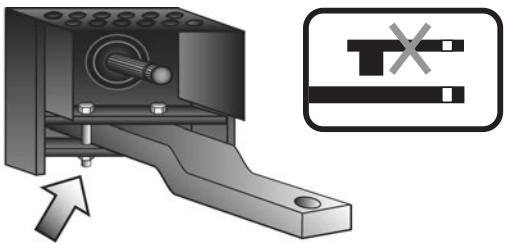

CORRECT DRAWBAR LENGTH

The rotary cutter's driveline is equipped with a constant velocity joint enabling the cutter to operate at difficult angles. For this reason we recommend the drawbar length for **all** PTO modes to be set at **16 inches** (tractors with an overall narrow outside rear wheel width may reduce this length). This shorter distance will reduce the hitch loading and stress on your drawbar. ***Do <u>not</u> use a distance shorter than 14 inches or slider damage may result.***

(Please consult your tractor's operator manual for correct drawbar adjustment procedures.)

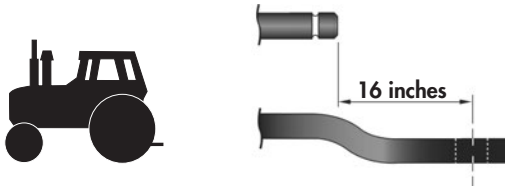

CAUTION: *To prevent damage to the tractor drawbar, avoid travelling at high speeds and over rough terrain. Heavy drawn equipment such as this cutter can place excessive strain on the drawbar.*

3 POINT QUICK COUPLER HITCH REMOVAL

CAUTION: *To prevent machine damage during turns, the 3 point quick coupler hitch must be removed and the draft link height be adjusted.*

1. Remove quick coupler hitch from tractor.
2. To clear driveline during turns, adjust draft link to provide highest lift possible.



WHEEL TREAD WIDTH SETTINGS

It is important to increase the tractor rear wheel tread width to maintain tractor stability when working on inclines or rough ground.

(Please consult your tractor's operator manual for correct adjustment procedures.)

CAUTION: *Rear tires may be damaged if hitch is contacted during turns. Check for tire clearance at hitch uprights when making tight turns.*

How To Hook-Up Your Cutter

ATTACHING CUTTER TO TRACTOR DRAWBAR

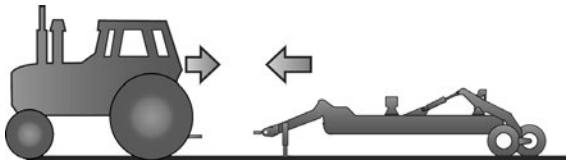

CLEVIS HITCH HOOK-UP

1. Ensure the settings in the **"How To Set Your Tractor"** section have been completed.
2. Pin cutter clevis into the supported position for hook-up using the clevis support pin.

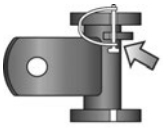

3. Adjust cutter height with jack to allow enough height for tractor drawbar.



4. Remove hitch pin from tractor drawbar or cutter hitch.
5. Clear the area of bystanders, back up tractor to cutter, aligning tractor drawbar with cutter hitch.
6. Engage tractor parking brake and/or place transmission in "Park", shut off tractor engine, and remove key.
7. Remove hitch clevis support pin and place into its storage position.
8. Install and secure drawbar pin. Lower cutter onto drawbar.

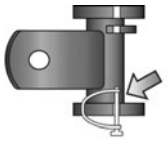

9. Remove jack and place in proper storage position.



10. Install Safety Chain, refer to the "Installing Safety Chain" section.

PRECISION HITCH HOOK-UP

1. Ensure the settings in the **"How To Set Your Tractor"** section have been completed.
2. Pin hitch into the supported position for hook-up using the hitch support pin.

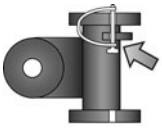

3. Adjust cutter height with jack to allow enough height for tractor drawbar.



4. Remove hitch pin from tractor drawbar and/or cutter hitch.
5. Clear the area of bystanders, back up tractor to cutter, aligning tractor drawbar with cutter hitch.
6. Engage tractor parking brake and/or place transmission in "Park", shut off tractor engine, and remove key.
7. Remove cutter hitch support pin and place into its storage position.
8. Lower cutter onto drawbar. Install and secure hitch bolt. (refer to "Precision Hitch Installation" diagram below)

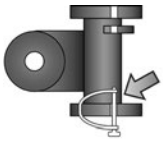

9. Remove jack and place in proper storage position.



10. Install Safety Chain, refer to the "Installing Safety Chain" section.

PRECISION HITCH INSTALLATION

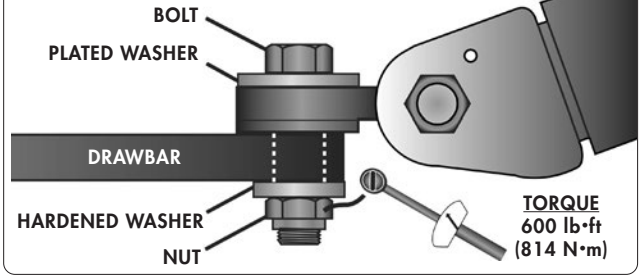

How To Hook-Up Your Cutter

INSTALLING SAFETY CHAIN

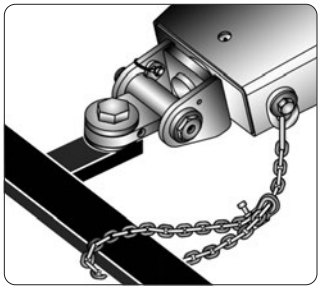

Attach the safety chain to the tractor drawbar support or other specified anchor locations. (Refer to your tractor's operator manual). Provide only enough slack in chain to permit turning.
Fasten chain back to itself with hook latch and ensure chain is properly and securely attached.

CAUTION: *Do not use safety chain by itself for towing. Replace entire chain if any link or end fitting is broken, stretched or otherwise deformed. If replacing, use a chain with the strength rating greater than the gross weight of the cutter.*

ATTACHING DRIVELINE TO PTO

DANGER: *Shut off tractor engine before attaching PTO driveline. Entanglement in rotating driveline can cause serious injury or death.*

1. Shut off tractor engine and remove key.
2. Check that the driveline telescopes easily and that the shield rotates freely.
3. Lift tractor PTO shield.
4. Support driveline, pull back on collar, align splines by rotating cutter driveline, and push driveline onto tractor PTO shaft until collar snaps into place.
5. Push and pull yoke several times to ensure driveline is locked. Do not pull collar, as this will release the lock.
6. Lower tractor PTO shield back into place.

ATTACHING HYDRAULICS

1. Clean off dust covers and ends of hoses.
2. Firmly push in appropriate hoses into tractor receptacles according to user preference.
3. Secure hoses as to not interfere with or contact moving parts.

CONNECTING LIGHTS *(optional)*

1. Connect cutter light plug into appropriate tractor receptacle.
2. Ensure light cable does not interfere with or contact moving parts.

DETACHING CUTTER FROM TRACTOR

1. Park cutter on a level, hard surface.
2. Raise cutter to full height. Wings may be in either the raised or lowered position.
3. Engage tractor parking brake and/or place transmission into "*Park*".
4. Shut off tractor engine and remove key.
5. Make sure transport locks are engaged. (refer to "Preparing Cutter for Transport" section)

   Note: *If wings are lowered only center transport lock can be engaged.*
6. Block wheels to prevent machine from rolling after detaching from tractor.
7. Take cutter's jack from storage position on cutter and secure it onto the jack mount bracket located on the cutter hitch.

   Note: *If parking tractor on soft ground, place a board under the base of the jack to prevent it from sinking.*
8. Raise cutter using jack to transfer the weight from the tractor drawbar to the jack.
9. Lift tractor PTO shield.
10. Support driveline, pull back collar, and slide driveline off tractor PTO shaft. Set driveline down onto the support block located on the cutter hitch.
11. Lower tractor PTO shield back into place.
12. Disconnect safety chain from tractor.
13. Remove hitch pin or bolt.
14. Start tractor engine and retract lift cylinder carefully to place weight of cutter on transport lock.
15. Relieve hydraulic pressure in the system according to your tractor's operator manual.
16. Disconnect hydraulic hoses and light plug (if equipped) from tractor receptacles.
17. Carefully drive tractor away.
18. If cutter will not be used for awhile, perform procedures as listed in the Cutter Storage section.

Cutter Preparation

PREPARATION CHECKLIST

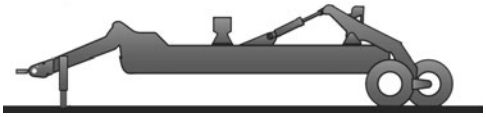

(Refer to the "*Maintenance*" section in this manual)

- ☐ Read and understand the Rotary Cutter Operator's Manual and all safety decals.
- ☐ Check that all safety locks, guards and shields are in place and secure.
- ☐ Lubricate all grease fittings and check the fluid level in all gear cases.
- ☐ Check that all hardware is in place and properly tightened.
- ☐ Inspect all tires and check that they are in proper working condition.
- ☐ Inspect all blades and blade hardware for wear or damage.
- ☐ Check that the cutter is properly levelled and the cutting depth is set. (Refer to the "How to Set Your Cutter" section)
- ☐ Make sure the driveline clutches and have been run-in and are properly adjusted. (Refer to the "Run-In of the Friction Clutch" section)

CUTTING BANDING STRAP



DANGER: *If the wings of the rotary cutter are banded together, ensure wing transport locks are in place and secured and the area is clear of bystanders before cutting banding strap. Serious injury or death could result from a falling wing.*

RUN-IN OF THE FRICTION CLUTCH

Necessary for all new clutches and clutches that have not been operated for (1) season or approximately 60 days. Refer to "*Run-In of the Friction Clutch*" in the "*Maintenance*" section in this manual.

IMPORTANT: *Before proceeding, complete the procedures under the sections "How to Set Your Tractor", "How to Hook up Your Cutter", and the cutter "Preparation Checklist".*

REMOVING TRANSPORT LOCKS & LOWERING WINGS

Note: *If the "**Restricted Transport Width**" procedure was used, follow the reverse instructions described in that section before proceeding.*

1. Park cutter and tractor on level ground.
2. Raise cutter center section by extending lift cylinder. Retract the wing cylinders to take pressure off transport locks.
3. Engage tractor parking brake and/or place transmission into "Park".
4. Shut off tractor engine and remove ignition key.
5. Disengage center and wing transport locks. Place lock pins into proper storage locations.

CAUTION: *Falling wings can cause serious injury or death. Stay clear of wings when raised with transport locks disengaged.*

6. Start tractor engine and move control lever(s) to lower wing(s) without entering the float position.
7. When wings are fully lowered, move control lever(s) into float position.
8. Retract lift cylinder to lower cutter to the ground.
9. Adjust cutter as required. Refer to the **"How to Set Your Cutter"** section

SETTING HYDRAULIC FLOW SPEED

IMPORTANT: *Excessive operating speed may result in machine damage. Be sure hydraulic flow indicators are adjusted properly.*

Note: *Before adjusting hydraulic flow speed ensure all transport locks are removed and area is clear of all bystanders.*

- Dual selective control valves are required.
- Set hydraulic flow control for center section until cutter fully raises or lowers in two seconds.
- Set hydraulic flow control for wings to the slowest possible speed.

Note: *Refer to your tractor's operator's manual for proper hydraulic flow control adjustment.*

How To Set Your Cutter

⚠ IMPORTANT SETTING INFORMATION

This Rotary Cutter is designed and built to handle a wide variety of cutting conditions. You may wish to adjust your cutter specifically to the conditions you are dealing with. With this in mind, some adjustments can be **extremely sensitive** and greatly affect your cutting performance. In order to achieve a proper cut, it is important to understand all the following cutter adjustment procedures :

- ***Setting Cutting Depth***
- ***Phasing Cylinders***
- ***Wheel Tread Width Settings***
- ***Leveling Front to Back***
- ***Leveling Side to Side***

WHEEL TREAD WIDTH SETTINGS

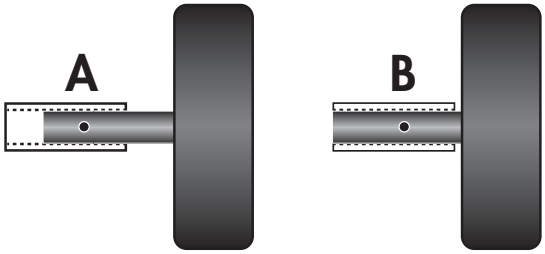

CENTER SECTION **WING SECTIONS**

For increased stability in the center section the proper setting of the wheels should be at position "A".

The recommended spacing for the wing section wheels is at position "B". This prevents the wheel from following in the same path as the skid shoes and also to improve contouring.

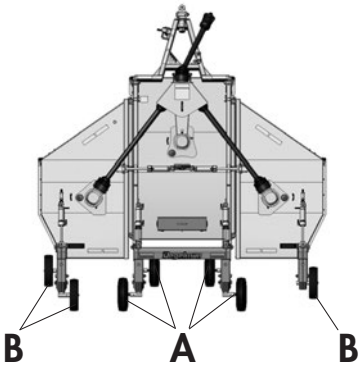

LAMINATED WHEEL CHECK

With laminated tires, check orientation as below:

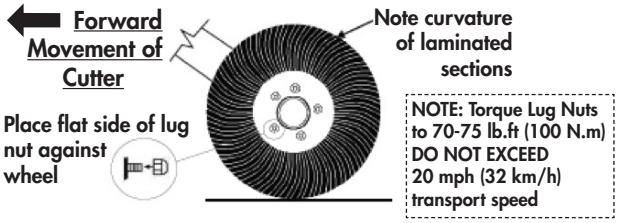

SETTING CUTTING DEPTH

1. Park cutter and tractor on level ground.
2. Raise cutter to desired cutting height by extending or retracting lift cylinders.
3. Install correct number of depth stops on lift cylinder rods to set cutting height.

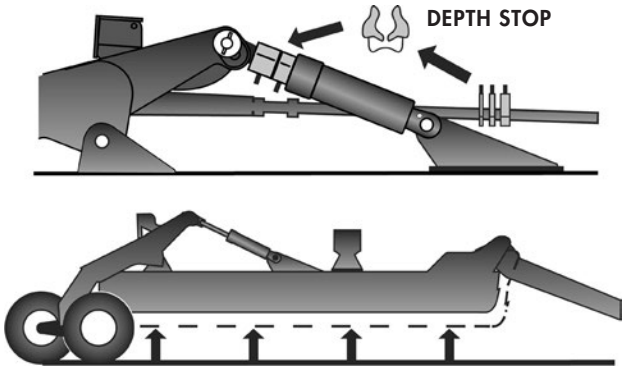

Notes:

- *It is recommended that the 2" depth stop remain on the lift cylinder rods at all times. This does not affect minimum cutting depth.*
- *By adding depth stops you are raising the cutting height.*
- *Store extra Depth Stops on wing cylinder rods.*

REPHASING THE CYLINDER CIRCUIT

In order to synchronize the raising and lowering of the cutter, a hydraulic phasing system has been implemented to provide uniform and level lifting.

To achieve this, a bypass port is integrated into the cylinders. Upon full extension a metered amount of fluid is allowed to bypass the piston seal to the next adjacent cylinder in the system. This re-adjusts all cylinders to the same position, then upon retraction positive sealing is engaged and synchronized operation continues.

IMPORTANT: To ensure optimum performance all entrapped air must be purged from the rephasing cylinder systems frequently.

1. Place machine so all sections are lowered and flat in field position.

2. Set the Tractor flow to Minimum / Moderate. Do NOT set tractor flow to maximum. Reducing the oil flow will reduce the amount of air that gets pressurized and mixed into the oil.

3. Cycle the cylinders - fully extended, fully retracted, and then fully extended again, this time holding it fully extended for about 30-40 seconds.

4. Repeat this cycle and hold process about 5 times.

How To Set Your Cutter

RECOMMENDED DECK HEIGHT

- The rotary cutter must be adjusted every time a different tractor is used due to varying drawbar heights.
- The cutter usually performs best when set level front to back.

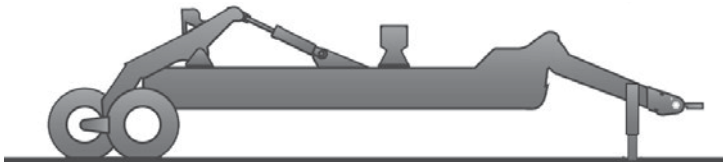

DECK HEIGHT ADJUSTMENT

Setting Front to Back Deck Angle:

1. Follow steps 1-7 under "*Removing Transport Locks and Lowering Wings" (Cutter Preparation Section)*
2. Fully raise the cutter by extending the lift cylinders and hold lever for a few seconds to ensure phasing cylinders are synchronized.
   (Refer to "*Rephasing the Cylinders*" section)
3. On a level surface, lower the cutter to preferred cutting height.
4. Measure and compare the height from the top of the tube on the center section to the level ground on the front and back of the cutter.

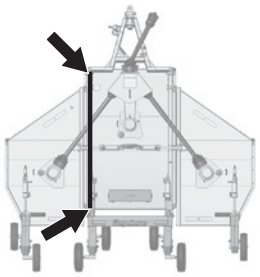

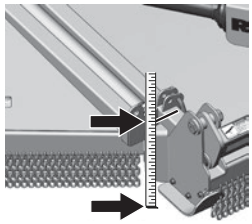

5. If the cutter needs to be adjusted: Raise the deck, place a block under the center section skid shoes and lower the deck to remove all tension from the tie-bars.

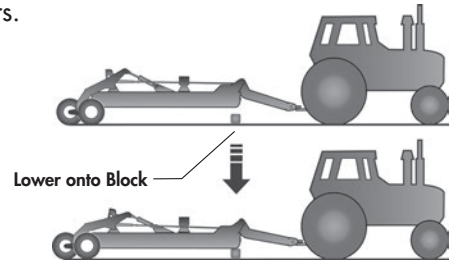

IMPORTANT: *The tie-bars **must** be loose in order to properly adjust the deck angle, or possible damage to the threads on the tie-bars could result.*

6. Loosen the jam nut (A) on the tie-bars.
   Lengthen tie-bar (*Loosen* nut B) if the front of the cutter deck needs to be lowered.
   Shorten tie-bar (*Tighten* nut B) if the front of the cutter needs to be raised.

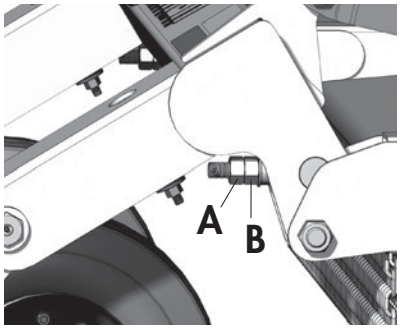

   (For every ¼ inch the tie-bar length is adjusted, the hitch height changes by approximately 1-1/2 inch).

7. Raise the cutter deck, remove the block and lower to preferred cutting height.
8. Measure and compare front to back height again. If further adjustment is required repeat the procedure until desired height is achieved.

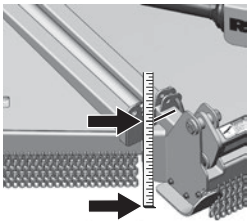

9. Check that the tie-bars are adjusted equally and the tension in the tie-bars is the same. Re-adjust and repeat until tension is uniform.

   Note: *It is important to adjust the tie-bars evenly to prevent overloading or damaging a single tie-bar.*

10. Tighten jam nuts (A).

How To Set Your Cutter

WING HEIGHT ADJUSTMENT

The rotary cutter is designed to cut either "**With Traffic**" or "**Against Traffic**". Check the rotation of the center section arrow decal on the top of the center section deck, near the gearbox. If the arrow is clockwise, and the center blades rotate clockwise, the cutter is designed to cut best with traffic. If the arrow is counterclockwise, and the center blades rotate counterclockwise, the cutter is designed to cut best against traffic.

Against Traffic
Wing Settings:

Using the wing adjustment system below, raise the left (ditch side) wing ½ inch up from level, and lower the right (road side) wing ½ inch down from level.

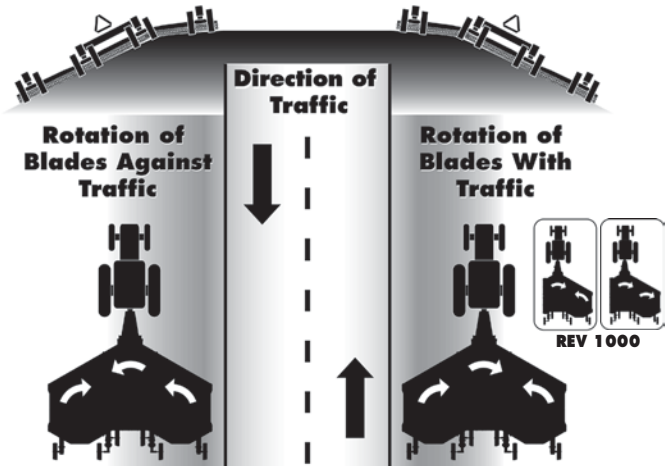

With Traffic
Wing Settings:

Using the wing adjustment system below, lower the left (road side) wing ½ inch down from level, and raise the right (ditch side) wing ½ inch up from level.

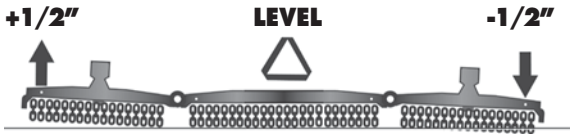

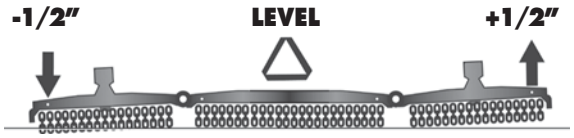

WING ADJUSTMENT SYSTEM - LEVELING SIDE TO SIDE

IMPORTANT: *It is important to level front to back before leveling side to side.*

1. Follow steps 1-7 under "Removing Transport locks and Lowering Wings". *(Cutter Preparation Section)*
2. Fully raise the cutter by extending the lift cylinders and hold lever for a few seconds to ensure phasing cylinders are synchronized.
   (Refer to "Rephasing the Cylinders" section)
3. On a level surface, lower the cutter to preferred cutting height.
4. Measure and compare the height from the bottom of the safety chain channel to level ground on the center section of the mower (1) and a location on the outer wing section (2).

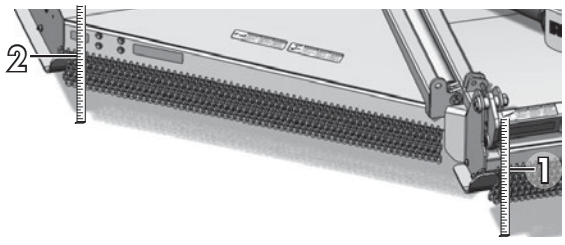

5. Refer to the above section on recommended wing adjustment settings. If this needs to be adjusted, loosen the jam nut (A) on each wing adjustment support.

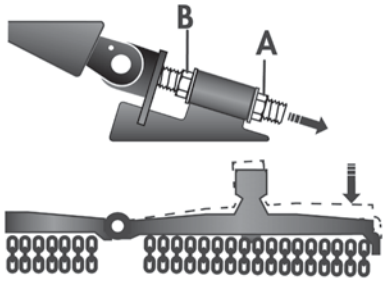

6. Adjust the wing adjustment nut (B) to raise or lower the wing. Measure and compare height, adjust until required height is reached.
7. Tighten jam nut (A).
8. Repeat same procedure for the other wing.

SAFE OPERATING PROCEDURES

⚠ DANGER:

- Never allow untrained or inexperienced persons to operate this equipment. The operator should wear a hard hat, safety glasses, hearing protection, and safety shoes.
- Before leaving seat: Set brake, stop engine, remove key and wait until all moving parts have stopped.
- Perform routine inspections and corrective/ preventative maintenance. Keep all shields and guards in place.
- Never allow persons to ride on the tractor or rotary cutter. Never allow children to operate tractor or rotary cutter.
- Never attempt to operate controls unless properly seated in the tractor seat with seat belt fastened.
- Never dismount a tractor that is moving, or attempt to mount a moving tractor.
- Never adjust machine while in motion.
- Operate only with tractor equipped with ROPS (Roll Over Protective System) and seat belts.
- Ensure tractor PTO speed (540 or 1000 rpm) matches the rotary cutter gearbox speed or drive components can be damaged.



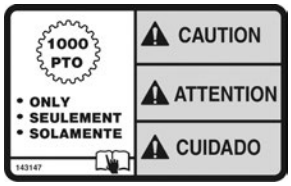

- Operate tractor at rated PTO speed. Machine may not perform properly if engine speed is too fast or too slow. Excessive PTO speeds may cause driveline or blade failures that may result in serious injury or death.
- Lower machine to ground before starting. Engage tractor PTO and slowly increase speed.
- Familiarize yourself with stopping the tractor and equipment quickly in case of a sudden emergency.
- Normal ground speed range is 0 to 5 mph (8 km/h). Use slower speeds when operating on or near steep slopes, ditches, drop-offs, rough terrain, overhead obstructions, power lines, or when avoiding obstacles and other foreign debris.

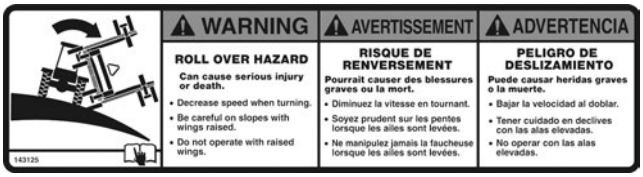

- Never drive into or out of a ditch or on a steep incline with wings in raised position.
- Decrease speed when turning, be careful on slopes or uneven terrain with wings in raised position.
- Never operate cutter in conditions of poor visibility such as fog, darkness, or any conditions that limit your clear visibility to less than 300ft (100m) in front of and to the sides of the mower.
- When conditions make it necessary to slow ground speed, shift to a lower gear rather than reducing engine speed. The engine will maintain rated speed and keep cutter running at optimum cutting speed.
- Only operate cutter in reverse direction when necessary. Use extreme care and only operate at a speed where you can safely control and operate the equipment.
- Never cut an area that has not been inspected for foreign debris and obstacles. Remove any foreign objects and clearly mark any objects that cannot be removed.
- **Stay clear of rotating or moving parts!** Contact or entanglement with moving/rotating parts may result in serious injury or death.

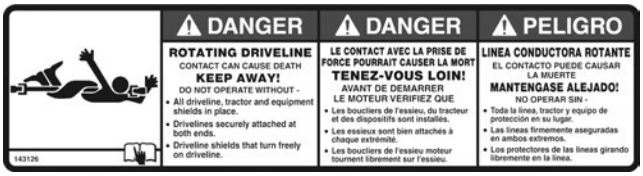



- Never operate mower with co-workers or bystanders in the area. It is possible for objects to be thrown great distances from the cutter. Thrown objects have the potential to cause serious injury or death. Always keep a minimum operating distance of 300ft. (100m) away from any bystanders.



- Do not operate cutter when the deck or wings are raised. Exposed blades create a potential hazard of thrown objects which may lead to serious injury or death.
- Avoid contact with heavy solid objects such as large rocks, guard rails, and concrete obstacles. Impact with these types of objects could damage blades causing broken objects to be projected at high velocities increasing the possibility of property damage, serious injury, or death.
- If blades make contact with a foreign object, stop immediately, repair any damage, and ensure cutter pan is balanced before continuing.

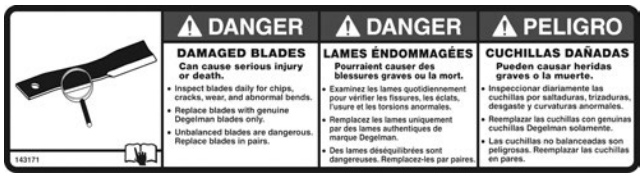

- Inspect blades daily for chips, cracks, wear, and abnormal bends. Unbalanced blades are dangerous. Replace damaged blades in pairs with genuine Degelman blades only.

RAISING WINGS

⚠ DANGER:

- *Shut off tractor PTO before raising wings to help prevent bodily injury or death from thrown objects or rotating blades.*
- *You must be on level ground before attempting to raise wings. Machine instability may be caused by weight shifting from one side to the other while raising wings.*



- *Falling wings can cause serious injury or death. Clear area of bystanders when raising wings. Wings are held up by hydraulic pressure only, never walk under wings until wing transport locks are in place and secured.*

WING FLOTATION

Whenever possible, it is recommended to run both wings (if applicable) in the float position. This allows the cylinder to be free to extend or retract enabling the cutter to follow the ground contour.

CUTTING ANGLES

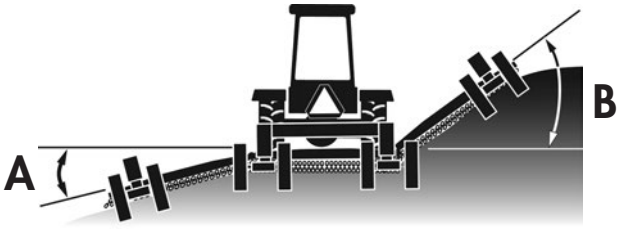

The cutter wings can be operated at angles of up to 22 degrees down (A) and 45 degrees up (B). It is not recommended to operate wings at an angle greater than 45 degrees (B) to prevent damage to the drivelines and to help prevent personal injury from thrown objects or debris.

BLADE ROTATION

The recommended blade rotations for roadway cutting are illustrated in the diagram below. The blade rotation of both wings at the front of the cutter is always directed towards the center of the machine. The blade rotation for the center section at the front of the cutter is always directed towards the ditch (as shown below).

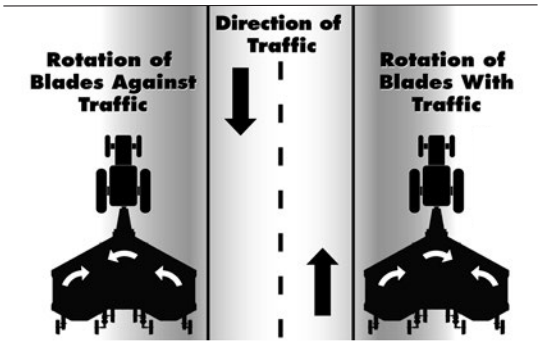

MAKING TURNS

⚠ IMPORTANT:

- *Do not exceed 80 degrees on driveline while turning. Damage will result to the constant velocity driveline joint.*
- *To avoid tractor and cutter damage, do not turn too tight and be sure that tractor tires do not contact cutter hitch.*

Transporting

SAFE TRANSPORT PROCEDURES

DANGER: *To prevent serious injury or death to you and others, always follow recommended safe transport procedures:*

- The cutter is wider than the tractor. Beware of oncoming traffic and roadside obstructions.
- When transporting cutter, always raise wings and install transport locks.

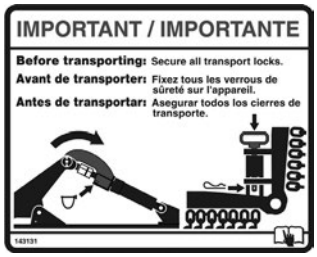

- Use flashing warning lights when travelling on public roads day or night, unless prohibited by law.
- Travel at a reasonable and safe speed. Never travel at a speed which does not allow adequate control of steering and stopping. Do not travel at speeds greater than 20 mph (32 km/h).
- Stop slowly.
- Sound tractor horn before backing cutter up.
- Reduce speed considerably when travelling over rough terrain.

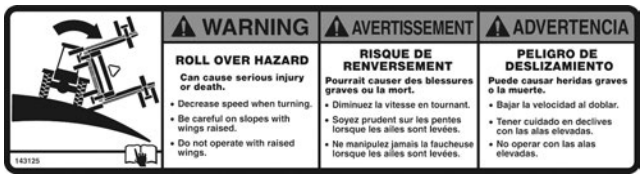

- Stay clear of any large bumps or deep depressions.
- Reduce ground speed when turning. Be sure tractor wheel does not contact cutter during turns.
- Avoid possible loss of control or tractor overturn. Tow only with correctly ballasted tractor.
- Ensure Safety Chain and all components are properly and securely attached. *(Refer to the "Installing Safety Chain" section)*

Note: *Do not use safety chain by itself for towing.*

DANGER: *Keep riders off machine at all times. Riders are subject to injury such as being struck by foreign objects and being thrown off the machine.*

PREPARING CUTTER FOR TRANSPORT

1. Disengage PTO and wait for all moving parts to stop.
2. Fully raise wings.
3. Raise cutter as high as possible.
4. Engage tractor parking brake and/or place transmission into "Park".
5. Shut off tractor engine and remove ignition key.

DANGER: *Falling wings can cause serious injury or death. Stay clear of wings until transport locks are in place and secured.*



6. Engage and properly secure all center and wing section transport locks.

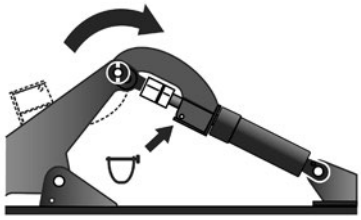

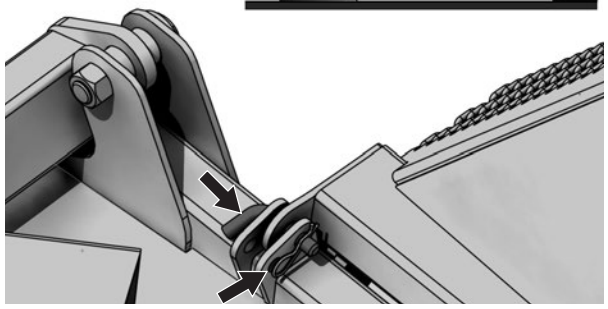

7. Ensure jack is secured in its storage position.
8. Ensure all components are properly and securely attached. Inspect safety chain and hitch. *(Refer to the "Installing Safety Chain" section)*
9. Ensure all reflectors and SMV signs are clean and visible. Ensure all lights are working and visible as required by federal, provincial/state, and local laws.
10. Start tractor engine and retract lift cylinder carefully to place weight of cutter on lock.

RESTRICTED TRANSPORT WIDTH

Retracting Wing Wheels

1. Follow steps 1-5 under the "*Preparing Cutter for Transport*" section of this manual.
2. Engage center and wing transport locks.
3. Place a depth control spacer of at least 3/4" wide between the center transport lock and the end of the hydraulic cylinder. *(see diagram)*

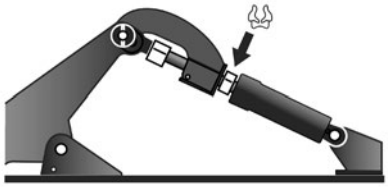

Note: *This procedure must be completed quickly, before center cylinder creeps down.*

4. Start tractor engine and retract lift cylinder to place weight of cutter on lock.
5. Continue to retract the lift cylinder for several minutes to allow wing cylinders to eventually retract. This will bring the wheels in as far as possible.

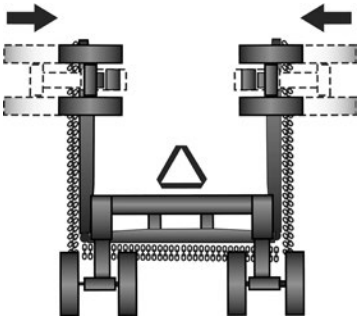

Note: *In order to prepare the cutter for operation again, the reverse of this procedure must be fully completed.*

GENERAL OPERATION - POOR CUTTING

This section of the troubleshooting deals with some of the more frequently asked questions relating to the general operation or performance of the Rotary Cutter. We have found that most problems are related to overlooked or neglected cutter adjustments. You may wish to review the section on "*How To Set Your Cutter*" after reading this troubleshooting section.

1. Is the Rotary Cutter the correct PTO speed for your tractor?

Check the decal on the hitch of the cutter.

- 540 RPM
- 1000 RPM

2. Are you cutting in the direction the Rotary Cutter was designed to cut?

This is a directional cutter. Check the center section arrow to verify:

- Against Traffic: Counter-clockwise rotation *(drive on the left hand side facing oncoming traffic).*
- With Traffic: Clockwise rotation *(drive on the right hand side in the same direction as traffic).*

3. Are the blades rotating the right direction?

Check the decals on the top of the deck for each section, and verify rotation. (There are clockwise and counterclockwise blades, match the blade to the rotation).

4. How fast are you cutting?

Try slowing down. *(In tall, wet or dense conditions, ground speed must be reduced due to the volume of material in the cutting chamber).*

5. How high are you cutting?

- For short, dry or sparse vegetation: The lower you cut, the more suction there is and the closer you are to the stiffer base of the plant stalk. *(Avoid cutting too low in rocky or uneven terrain).*
- For tall, lush or dense vegetation: Cut slightly higher or reduce ground speed to avoid overloading the cutting chamber.

6. Are the blades bent?

Compare to a new blade. *(Bent blades will cause loss of suction and uneven cutting height).*

7. Are the blades badly worn or damaged?

Check or compare to a new blade.

8. Are the clutches (torque limiters) slipping?

Although these clutches are non-adjustable they should be checked periodically to ensure they are set properly. The clutches will slip at a pre-determined torque setting if they are properly maintained.

Refer also to the "*Run-In of the Friction Clutch*" in the Maintenance Section.

9. Is the cutter leaving one or two uncut strips visible the next day?

This is usually caused by the tractor wheels bending over the stalks of vegetation. The cutter cannot pull them back up again soon enough to completely cut them. Cut debris is distributed on top of the bent over stalk to appear as though it is cut. By the next day the stalk stands back up again.

To minimize this:

- Reduce ground speed. *(Slowing down allows more time for the material to lift and more blade passes).*
- Lower the cutting height to increase suction and pick up more of the wheel tracks.
- Check that blades are not bent. Compare to a new blade. *(Bent blades will cause loss of suction).*

Troubleshooting

OPERATION

SYMPTOM	PROBLEM	SOLUTION
Uneven Cut	Excessive ground speed.	Reduce ground speed.
	Blades worn, dull, or bent.	Replace blades. (Refer to “Maintenance” section)
	Cutter not level side to side.	Adjust. (Refer to” Cutter Adjustments” section)
	Improper height adjustment.	Adjust cutter height. (Refer to “Cutter Adjustments” section)
	Low tractor tire pressure on one side.	Adjust tire pressure. (Refer to your tractor operator’s manual)
	Turning too fast.	Reduce ground speed when turning.
	Tractor tires push grass down.	Adjust your tractor wheel spacing. (Refer to your tractor operator’s manual)
	Conditions too wet.	Wait for conditions to dry.
	Damaged cutter pan.	Repair or replace as necessary.
Uncut Material	Excessive ground speed.	Reduce ground speed.
	RPM too low.	Use full PTO speed. (Refer to your tractor operator’s manual)
	Improper blade for direction of cut.	Install blades so rotation is correct.
Poor Shredding	Excessive ground speed.	Raise the front of cutter relative to the rear to hold and circulate material longer. (Refer to the ”How to Set Your Cutter” section - Leveling Front to Back)
		Reduce ground speed.
	Cutting too high.	Lower cutting height. (Refer to the ”How to Set Your Cutter” section - Setting Cutting Depth)
Windrowing or Uneven Material Distribution	Material heavy and lush.	Level the cutter deck. (Refer to the ”How to Set Your Cutter” section - Leveling Front to Back)
		Increase ground speed.
Cutter Vibration	Loose blades.	Tighten blade bolts.
	One new and one old blade on same blade mount.	Replace blades in pairs.
	One broken blade.	Replace blades in pairs.
	Broken or defective U-joint cross bearing.	Repair or replace as necessary.
	Driveline bent or damaged.	Repair or replace as necessary.
	Bent or damaged PTO shaft or CV.	Repair or replace as necessary.
	Bent or damaged Gearbox output shaft.	Repair or replace as necessary.
	Blade mount bent or damaged.	Repair or replace as necessary.

Troubleshooting

BLADES

SYMPTOM	PROBLEM	SOLUTION
Excessive Wear	Cutting too low in abrasive conditions. (ex. sandy or rocky)	Increase cutting height.
Bolt Loosening	Inadequate torque on blade bolts.	Tighten blade bolts. (Refer to “Maintenance” section)
	Lock nut worn out.	Replace lock nut.
	Cutting in very wet conditions.	Do not operate in these conditions.
	Cutting too low, scalping ground.	Increase cutting height.
	Cutting too low in rocky conditions.	Increase cutting height.
Breakage	Cutting too low in rocky conditions.	Increase cutting height.
	Cutting with damaged or extremely worn blades.	Replace blades. (Refer to “Maintenance” section)

Troubleshooting

DRIVELINE CLUTCHES

SYMPTOM	PROBLEM	SOLUTION
Overheated	Clutch slipping.	Check for jammed blade or foreign object.
	Friction plates worn.	Replace plates. (Refer to "Maintenance" section)
	Excessive ground speed in heavy conditions.	Reduce ground speed.
	Excessive scalping.	Adjust cutting height. (Refer to "Cutter Adjustments" section)
Seized	Prolonged storage in damp conditions.	Free up slip clutch. (Refer to "Maintenance" section)
		Inspect clutch lining and repair or replace as necessary. (Refer to "Maintenance" section)

DRIVELINES

SYMPTOM	PROBLEM	SOLUTION
Telescoping tube fails	Shock load.	Avoid solid objects.
Telescoping tube wears.	Lack of lubrication.	Apply grease daily. (Refer to "Maintenance" section)
Yoke or cross fails.	Lack of lubrication.	Apply grease daily. (Refer to "Maintenance" section)
	Shock load.	Avoid solid objects.
	Slip clutch seized caused driveline to receive high shock loads.	Inspect clutch lining and repair or replace as necessary. (Refer to "Maintenance" section)
Twisted	Slip clutch seized caused driveline to receive high shock loads.	Inspect clutch lining and repair or replace as necessary. (Refer to "Maintenance" section)
Constant Velocity Joint Fails	Lack of lubrication.	Apply grease as described in the "Maintenance" Section.
	Turning too sharp.	Avoid extremely sharp turns and jackknifing.
PTO Driveline Bent	Contact with drawbar.	Reposition drawbar. (Refer to "How to Set Your Tractor" Section)
	Driveline too long, bottoms outs when operating through deep gullies.	Avoid these conditions.

SAFE MAINTENANCE PROCEDURES

Before ***adjusting*** or ***servicing*** a cutter connected to a tractor:

1. Park cutter and tractor on level ground.
2. Engage tractor parking brake and/or place transmission into "Park".
3. Disengage PTO.

Wings Up

4. Raise cutter and wing(s).
5. Engage center and wing transport locks.

Wings Down

4. Raise cutter and engage center transport lock.
5. Lower wings completely.

6. Shut off tractor engine and remove ignition key.
7. Place safety stands in secure locations under center body and wing sections, NOT under axles or wheel supports.
8. Start tractor engine and raise cutter.
9. Disengage center transport lock and lower cutter onto stands.
10. Engage tractor parking brake and/or place transmission into "Park".
11. Relieve pressure in hydraulic system. *(See tractor Operator's Manual).*
12. Shut off tractor engine and remove ignition key.
13. Ensure all moving parts have stopped, then remove PTO driveline from tractor.

DANGER: *To prevent serious injury or death to you or others, and to prevent damage to your equipment, always follow these safety messages:*

- To prevent personal injury from unexpected movement, ensure cutter is properly supported and on a level surface before performing any service work.



- Do not make or allow any alterations or modifications to this rotary cutter, its components, or its functions.
- Never lubricate, adjust, or service machine while it is moving. Ensure tractor engine is off, all moving parts have stopped, and the PTO driveline has been disconnected before servicing.



- The blades and cutter pan may rotate for several minutes after PTO is shut off. Before working on cutter, look and listen for rotating driveline to stop completely.



- Always secure wing transport locks before servicing, parking, or transporting cutter. Always keep people a safe distance from the cutter when raising or lowering wings.
- Ensure all guards, shielding, and their components are maintained and in proper working condition. Replace or repair any damaged components.
- Ensure all guards, shielding, and their components are replaced and secured after service is complete.
- Maintain the product safety decals and replace any decals that are damaged, missing or unreadable.

4 HOUR

IMPORTANT: It is very important to grease the constant velocity body of the PTO driveline with a minimum of 15 shots of grease every 4 hrs.

CAUTION: *The CV body serves as a reservoir for the lubrication of the centering mechanism. Failure to lubricate may result in machine damage.*

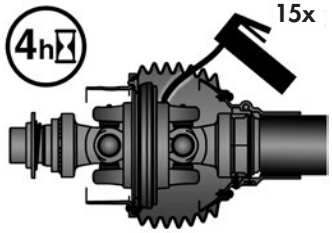

- Visually inspect machine for damage. Repair or replace damaged parts as required.
- Visually inspect all cutter blades for damage. Repair or replace damaged blades or blade hardware as required.

8 HOUR *(Daily)*

- Fully inspect all cutter blades for chips, cracks, wear, and abnormal bends. Damaged blades can cause serious injury or death.

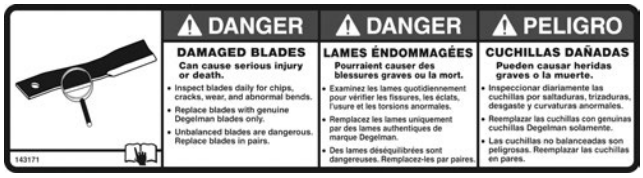

- Fully inspect all blade hardware and ensure they are all properly tightened and secured.
- Check the tightness of all newly replaced nuts and bolts after the first 8 hours of operation, then weekly.
- Grease all driveline components.
- Check all hardware to ensure they are tight and secure.

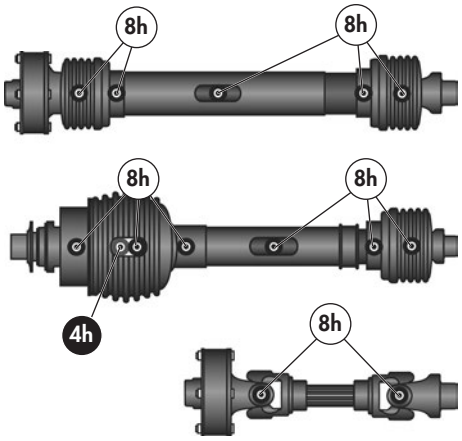

- Grease all hitch components, tiebar pins, and walking axle suspension bolts.

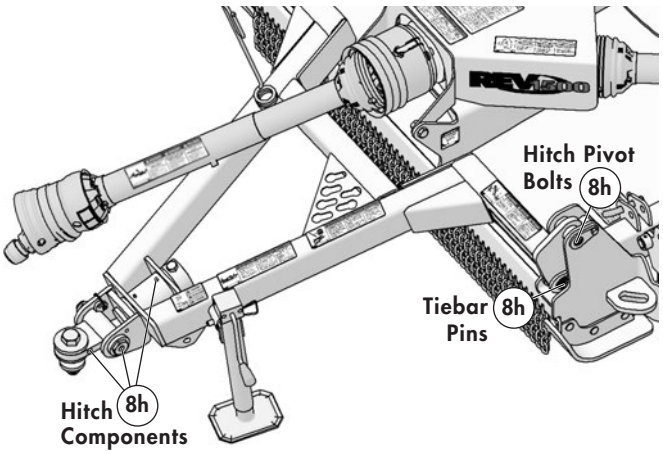

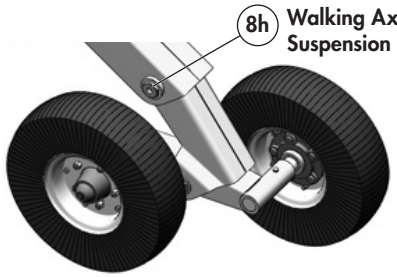

- **Height Control Hydraulic Circuit**: To ensure optimum performance, all entrapped air must be purged from the rephasing cylinder system frequently. Follow the "Rephasing the Cylinder Circuit" procedure.

- Clean off deck and gearboxes of debris at the end of every day.

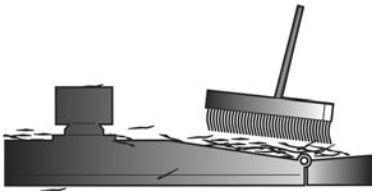

Note: *Build up of debris may interfere with driveline and cause gearboxes to overheat resulting in damaged components. Also a build of wet debris may result in corrosion.*

- Clear the tiebar channel and pin areas of debris regularly to avoid buildup.

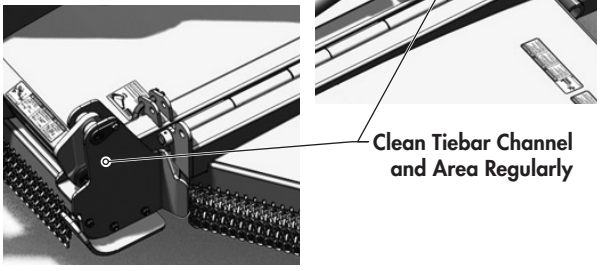

Maintenance & Service

20 HOUR

CAUTION: *A consistent loss of fluid can indicate damaged seals. Damaged seals should be replaced immediately to prevent ruining the gearbox.*



- Check fluid levels on all gearboxes *(on level ground).*

When Checking/Filling:

Output (Wing & Center) Gearboxes

- A sight glass is located on middle of the output gearboxes. Fill until fluid reaches the center of the sight glass.
- Use SAE 80w/90 Gear Oil.



Splitter Gearbox

- Use fluid level plug on splitter box to check level. To get a proper reading when checking oil level, **do not** screw in the dipstick. Fill until oil reaches the dipstick fill line.
- Use SAE 80w/90 Gear Oil.

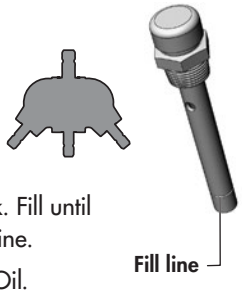

- Check the condition of lock pins, cotter pins, and all other fasteners weekly. Replace if necessary.
- Grease all cylinder pins, walking axle bushings, rockshaft pins, and wing strut pins.

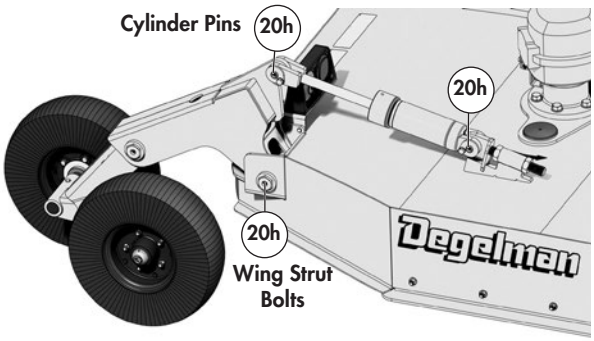

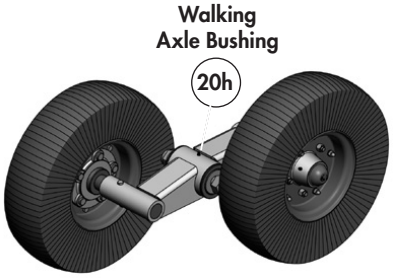

50 HOUR

- Replace the fluid in new gearboxes after the initial **50 hours** of use. Then continue to replace the fluid annually.

  Note: *Before checking level on dipstick Wait approximately 15-20 min. after filling right angle gearboxes to allow oil to settle into the bottom cavity before checking level on dipstick.*
- Check hubs for bearing play and condition of seal.
- Check gearbox bolts. Re-torque if necessary.
- Re-torque driveline yoke and torque limiter bolts:
  Yoke Bolts: **225 lb·ft** (300 N·m)
  Torque Limiter: **80 lb·ft** (110 N·m)



- Re-torque precision hitch bolt to **600 lb·ft** (814 N·m).

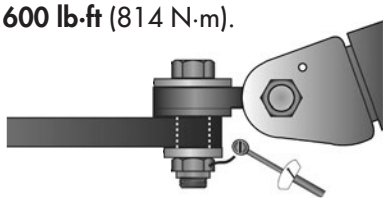

100 HOUR

- Grease all axle hub bearings.
- Check tire pressures if using aircraft tires.



Recommended tire pressure 42 psi

- Check skid shoes for excessive wear.
- Pull apart the driveline universal slider shafts and apply grease to all sides.
- Re-torque suspension pivot bolts to **180-200 lb·ft**. If too tight or too loose it could cause excessive wear.

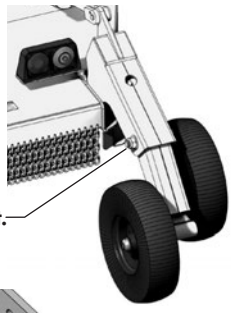

- Re-torque hitch tongue pivot bolt to **75 lb·ft**. If too tight or too loose it could cause excessive wear.

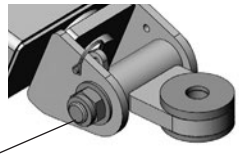

ANNUALLY

- It is recommended that hubs are dismantled, cleaned, inspected, and repacked every year. Whenever a worn or damaged seal is replaced it is also recommended that the bearing assembly be cleaned and repacked with wheel grease.
- Check all gearbox seals for leaks. Replace as required.
- Replace fluid in all gearboxes.

⚠ **CAUTION:** *If the universal joint sliding members are allowed to dry out to the point where the two halves cannot slip freely, damage to the rotary cutter or tractor may result.*

- Pull apart the driveline universal slider shafts and apply grease to all sides.
- The shielding on the drivelines should be removed and the old grease should be removed with a solvent.

  Note: Follow the above procedure more frequently in *dirty* or *dusty conditions*.

⚠ **WARNING:** *High pressure fluid can pierce skin causing serious injury or death. Relieve pressure on system before repairing or adjusting. Wear proper hand and eye protection when searching for leaks. Use wood or cardboard instead of hands. Keep all components in good repair.*

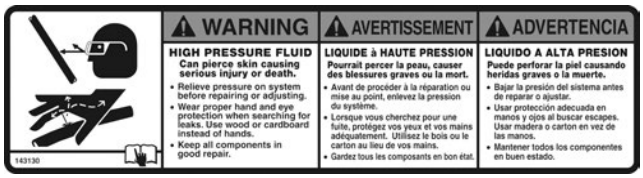

- Inspect all hydraulic hoses for cracks, wear, and leaks.
- Remove hitch tongue pivot bolt, clean & inspect, turn 180 degrees to change wear surface, and re-insert. Replace if worn. Torque to **75 lb·ft**.

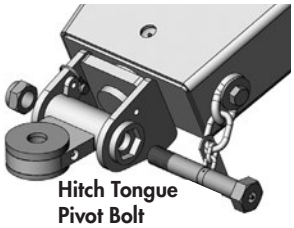

- Disassemble precision hitch components *(if applicable)*, clean, inspect, and re-assemble.

- Inspect suspension springs and bolts. Replace if damaged.

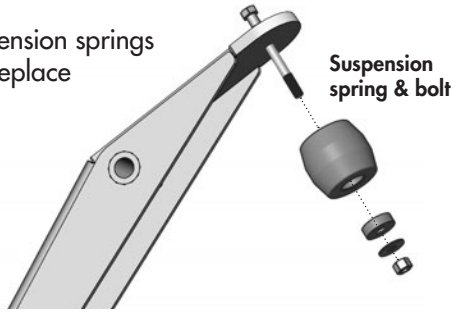

Typical Suspension Detail

Pre-loading of rubber spring is required on all strut assemblies. Exposed thread length when using correct hardware should be approximately:

- **3/8"** on **wing strut** assemblies
- **1/2"** on the center section **rockshaft strut** assemblies.

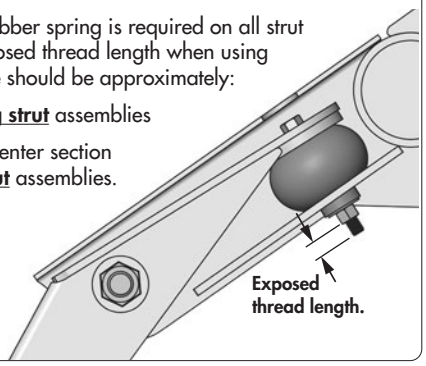

- Inspect suspension and walking axle pivot bolts. Replace if worn.

  Remove, turn *(to change wear surface)*, and replace.

  Torque to 180-200 lb·ft.

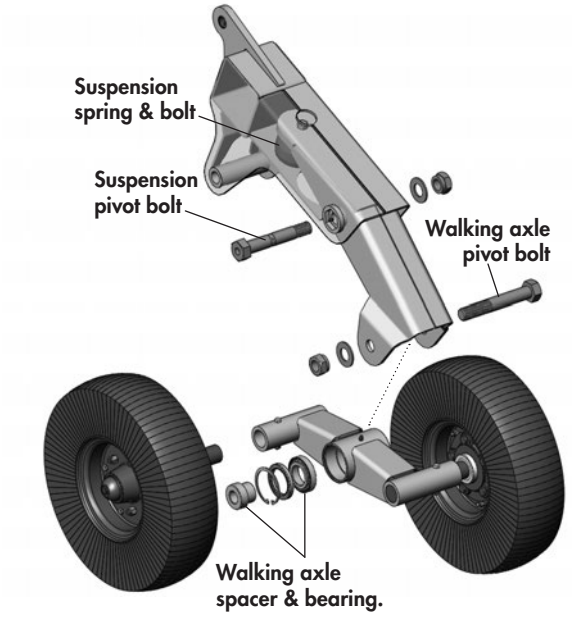

- Inspect walking axle spacer and bearings. Replace if worn. Remove spacers, turn 180° *(to change wear surface)*, and replace.

BLADES

DANGER: *The blades and cutter pan may rotate for several minutes after PTO is shut off. Before working on cutter, look and listen for rotating driveline to stop completely.*



- Blades should be inspected daily for chips, cracks, wear, and abnormal bends. Damaged blades can cause serious injury or death.

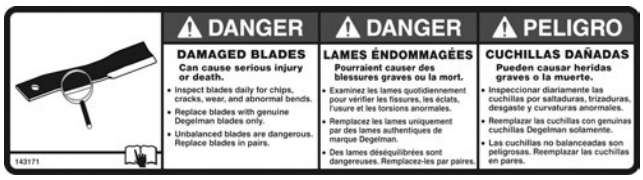

- Do not try to modify blades in any way such as sharpening, welding, or straightening. Modifying the blades may reduce the strength of the blade, increasing the risk of broken pieces being thrown from the machine.
- If the blades are dull, bent, worn, chipped, or cracked, replace them in pairs with genuine Degelman blades only.
- Always replace damaged blades in pairs. Unbalanced blades are dangerous and machine damage may result.

BLADE HARDWARE

- Retighten blade mounting hardware daily. Blade hardware should be torqued to **725 lb·ft**.
- It is recommended to change blade bolts and locknuts every time the blades are replaced.
- Seat bolt flush against pan with hammer before tightening nut.
- When changing blades with only one person you may wish to support the blade and hex bolt from below to make it easier to tighten the blade locknut from above.

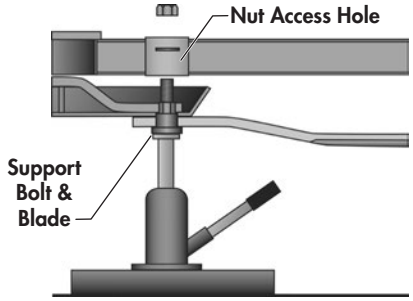

BLADE CARRIER

- Blade Carriers are secured with castle nuts and cotter pins to the splined shaft on the gearboxes. A coned washer is located between the castle nut and the gearbox shaft. The coned part of the washer should be positioned against the nut.
- It is important to periodically check and retighten the retaining (castle) nut.
- It is important to torque the nut to **800 lb.ft**.

CAUTION: *To prevent personal injury from falling pan, it is important to put blocks under cutter pan when removing retaining nuts.*

- Blade carriers should be removed from the top side by hitting the carrier through the nut access hole on the top deck. When hitting carrier you should rotate it 180 degrees between hits.

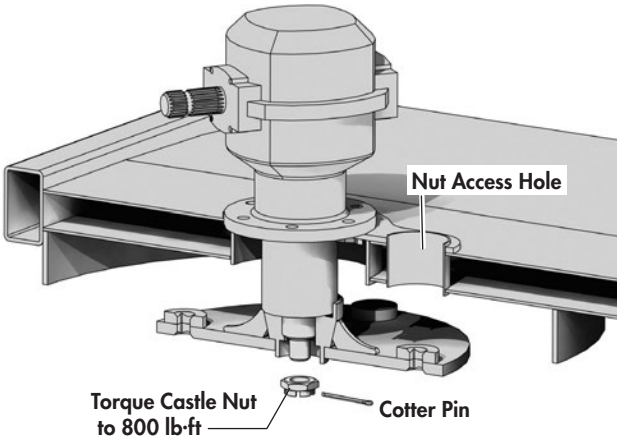

Blade Carrier
(Standard)

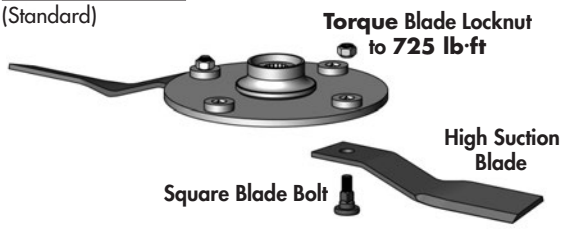

TORQUE SPECIFICATIONS

CHECKING BOLT TORQUE

The tables shown below give correct torque values for various bolts and capscrews. Tighten all bolts to the torques specified in chart unless otherwise noted. Check tightness of bolts periodically, using bolt torque chart as a guide. Replace hardware with the same strength (Grade/Class) bolt.

IMPERIAL TORQUE SPECIFICATIONS

(based on "Zinc Plated" values)



Size	Grade 5	Grade 8
	lb.ft (*N.m*)	lb.ft (*N.m*)
1/4"	**7 (*10*)**	**10 (*14*)**
5/16"	15 (*20*)	20 (*28*)
3/8"	**25 (*35*)**	**35 (*50*)**
7/16"	40 (*55*)	60 (*80*)
1/2"	**65 (*90*)**	**90 (*120*)**
9/16"	90 (*125*)	130 (*175*)
5/8"	**130 (*175*)**	**180 (*245*)**
3/4"	230 (*310*)	320 (*435*)
7/8"	**365 (*495*)**	**515 (*700*)**
1"	550 (*745*)	770 (*1050*)
1-1/8"	**675 (*915*)**	**1095 (*1485*)**
1-1/4"	950 (*1290*)	1545 (*2095*)
1-3/8"	**1250 (*1695*)**	**2025 (*2745*)**
1-1/2"	1650 (*2245*)	2690 (*3645*)

METRIC TORQUE SPECIFICATIONS

(based on "Zinc Plated" values)



Size	Class 8.8	Class 10.9
	lb.ft (*N.m*)	lb.ft (*N.m*)
M6	**7 (*10*)**	**10 (*14*)**
M8	16 (*22*)	23 (*31*)
M10	**30 (*42*)**	**45 (*60*)**
M12	55 (*75*)	80 (*108*)
M14	**90 (*120*)**	**125 (*170*)**
M16	135 (*185*)	195 (*265*)
M18	**190 (*255*)**	**270 (*365*)**
M20	265 (*360*)	380 (*515*)
M22	**365 (*495*)**	**520 (*705*)**
M24	460 (*625*)	660 (*895*)
M27	**675 (*915*)**	**970 (*1315*)**
M30	915 (*1240*)	1310 (*1780*)
M33	**1250 (*1695*)**	**1785 (*2420*)**
M36	1600 (*2175*)	2290 (*3110*)

HYDRAULIC FITTING TORQUE

Hydraulic Fitting Torque*

Size	lb.ft (N.m)
1/2	34 (46)
3/4	75 (100)
7/8	90 (122)

* The torque values shown are based on lubricated connections as in reassembly.

Tightening Flare Type Tube Fittings

1. Check flare and flare seat for defects that might cause leakage.
2. Align tube with fitting before tightening.
3. Lubricate connection and hand tighten swivel nut until snug.
4. To prevent twisting the tube(s), use two wrenches. Place one wrench on the connector body and with the second tighten the swivel nut to the torque shown.



MAINTENANCE NOTES

HYDRAULIC CYLINDER REPAIR

PREPARATION

When cylinder repair is required, clean off unit, disconnect hoses and plug ports before removing cylinder.

When removed, open the cylinder ports and drain the cylinder's hydraulic fluid.

Examine the type of cylinder. Make sure you have the correct tools for the job.

You may require the following tools:

- *Proper **Seal Kit***
- *Rubber Mallet*
- *Screwdriver*
- *Punch*
- *Pliers*
- *Emery cloth*
- *Torque Wrench*

Types of Cylinders
(Wire Ring / Threaded Head)

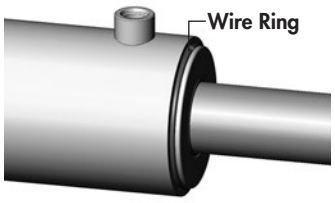

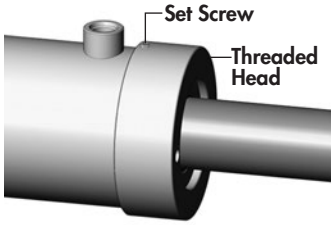

REPAIRING A WIRE RING CYLINDER

1. Retract the rod assembly.
2. Remove the external steel wire ring.

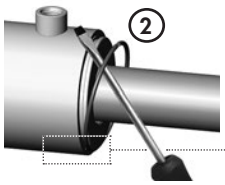

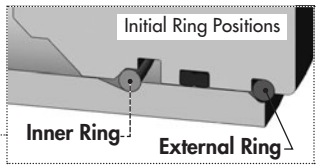

3. Remove any dirt that may have accumulated on the cylinder head.
4. Using the mallet and punch, push the head into the cylinder tube until the internal tube groove is fully exposed. This will also move the internal wire ring into its removal position.

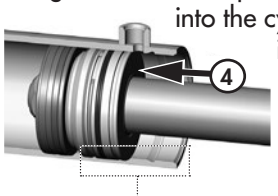



5. Take the plastic removal ring from the seal kit:
   a) Straighten the ring and remove any kinks or excessive curl to make installation easier and prevent it from falling out.
   b) Insert the removal ring into the internal groove with the feathered end pointing into the tube.

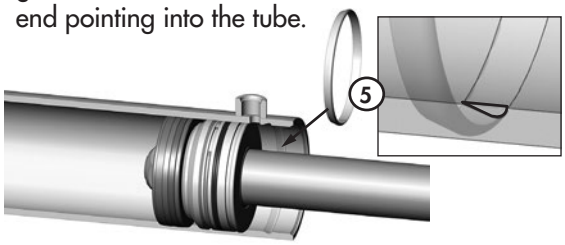

   c) Use a screwdriver or a finger to hold one end of the ring in the groove while fitting the other end of the ring into the groove. The tips should snap in together. Ensure it is secure and fully seated before the next step.

   IMPORTANT: It is important to e*nsure the removal ring is completely in the groove before pulling the rod out. If the ring sticks out it will get stuck between the head and tube.*

6. a) Extend the rod to pull head out of tube. If the rod does not pull out easily, push the head back in and ensure the ring is properly in the groove. Replace ring if necessary.

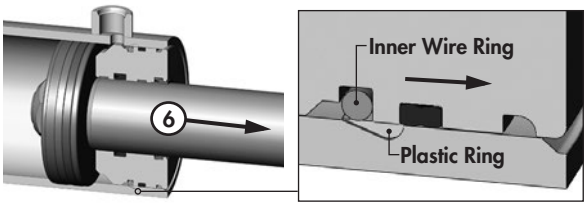

   Note: *Excessive force will not overcome a jammed ring and could damage the cylinder.*
   b) Completely remove rod and head from tube.

7. Remove plastic removal ring from the cylinder tube.

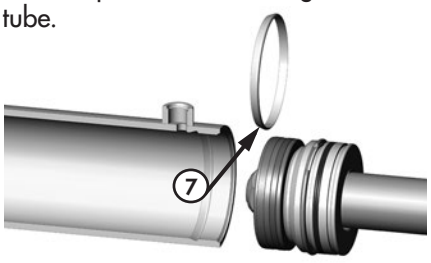

8. Remove locknut, piston and head from rod.

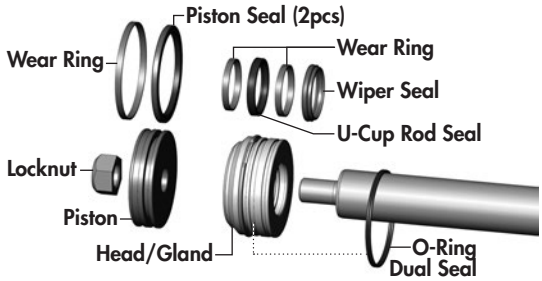

9. a) Inspect and replace all of the seals with new components.

   b) Inspect the inside of the cylinder barrel, piston, rod and other polished parts for burrs and scratches. Smooth areas as needed with an emery cloth.

   c) During re-assembly of head/gland assembly, leave the outer O-Ring Dual Seal loose on the rod to re-install at a later step.

10. Replace piston and torque the locknut to required value. (Refer to chart below)

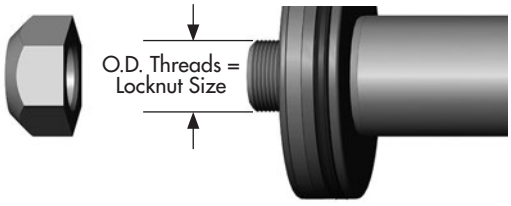

LOCKNUT SIZE (PISTON)	TORQUE VALUE
3/8 - 24 UNF	25-30 lb.ft (35-42 *N.m*)
1/2 - 20 UNF	**40-60 lb.ft *(55-80 N.m)***
5/8 - 18 UNF	95-105 lb.ft (130-140 *N.m*)
3/4 - 16 UNF	**175-225 lb.ft *(240-305 N.m)***
7/8 - 14 UNF	200-275 lb.ft (270-370 *N.m*)
1 - 14 UNF	**300-380 lb.ft *(405-515 N.m)***
1 1/8 - 12 UNF	400-500 lb.ft (540-675 *N.m*)
1 1/4 - 12 UNF	**500-600 lb.ft *(675-810 N.m)***
1 1/2 - 12 UNF	700-800 lb.ft (950-1085 *N.m*)
1 3/4 - 12 UNF	**800-900 lb.ft *(1085-1220 N.m)***

11. a) Install the supplied band clamp to compress the inner wire ring on the head/gland assembly so it will fit into the tube.

    Note: Make sure the cam of the band clamp is not overtop of the gap in the ring.

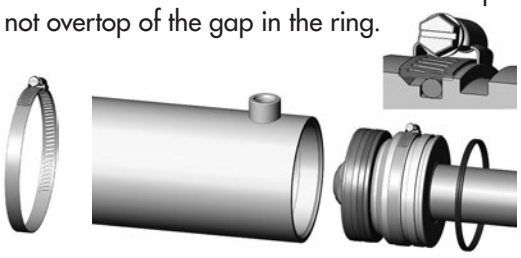

11. b) Tighten the band clamp to ensure the wire ring is fully seated. Then, loosen the clamp approx. 1/2 a turn to allow band clamp to slide during final assembly.

12. Lubricate the cylinder tube and piston seals.

13. Insert the piston into the tube. Tap the cylinder head into the tube until the clamp slides over and the inner wire ring is inside the tube.

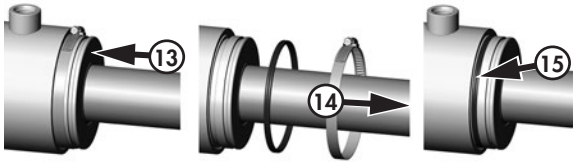

14. Loosen the clamp and remove.

15. Install the O-Ring Dual seal.

16. Tap the head the rest of the way until the end is flush with the tube.



IMPORTANT: The head/gland must be inserted until it is flush with the tube to allow the inner wire ring to snap into its seated position in the internal cylinder groove. Failure to insert the head flush as shown will result in the head and rod assembly coming out of the tube when pressure is applied to the cylinder.

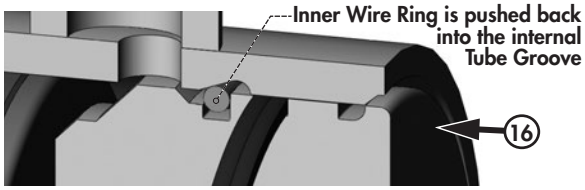

17. Pull the rod out to expose the external wire ring groove in cylinder head, and then install the external ring.

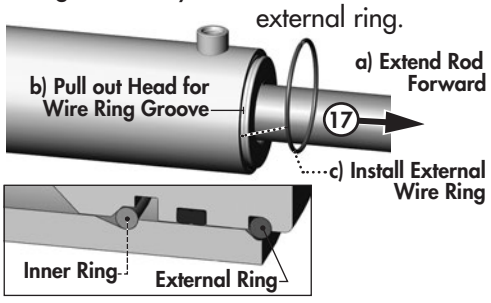

18. Before using the cylinder, ensure that you double check your work.

Maintenance & Service - Adjustments: Rephasing Cylinders

Overview & Principles of Rephasing

A **Rephasing Cylinder System** enables a pair (or multiple) cylinders to extend and retract in very near unison.

Rephasing is accomplished by using a rephasing passageway which is located at the position of full extension. Many design techniques accomplish this but in simplicity, the ***rephasing passageway*** allows a small amount of hydraulic fluid to bypass the cylinder piston in the fully extended position ultimately allowing the cylinders to rephase.

This feature allows the cylinders to be aligned during set up and ***rephased*** in the event of oil leakage/by-pass during usage or after service work.

A rephasing cylinder system will consist of a master cylinder and 1 or more slave cylinders. These cylinders operate evenly to raise and lower the implement to the desired working depth.

Bleeding Air & Rephasing Function

Rephasing cylinder lift systems should be ***rephased*** periodically to purge any air that may be ingested into the system over time and/or compensate for drift due to system leakage.

To rephase the system, with the cylinder fully extended, actuate the cylinder valve for 30 seconds, or 5-10 seconds if you rephase often.

In a new rephasing circuit, a much longer time of maintaining a fully extended sequence may be required to bleed excessive air out of the circuit and may have to be repeated several times.

⚠ **IMPORTANT:** *A rephasing cylinder circuit utilizes positive-displacement that effectively transfers power between cylinders, with the possibility of increasing internal pressures from cylinder to cylinder. Intensification occurs in hydraulic cylinders when there is pressure supplied to the full bore end of the hydraulic cylinder (extension) but the rod end (retraction) port becomes blocked or under excessive load. Pressure intensification may cause pressures to exceed the working pressure ratings of the cylinders themselves, or other components within the system. Safety awareness and caution should be taken to identify signs or causes of potential pressure build-up in the circuit.*

Troubleshooting

Series rephasing cylinder systems *(Master and Slave(s))* can exhibit undesirable behaviors such as ***creep*** *(drift or movement when the hydraulic cylinder is not in use)* or ***failing to stay synchronized*** *(not extending and retracting at the same rate).*

Below is a brief overview of some of the possible conditions that contribute to cylinder creep, drift or the series cylinder getting out of sync. Keep in mind that the cylinders are only part of the hydraulic circuit and there can be other contributing causes.

Cylinder rod measurement method:

Cylinder by-pass is a common field issue in series cylinder systems, and a systematic review is required to determine the problem.

- Extend the cylinders fully to the re-phasing position, then retract approximately 2+ inches away from the rephasing position.
- Immediately disconnect the hydraulics from tractor.
- Measure the length of the extended cylinder rod on each cylinder.
- Leave implement to stand for some an extended period of time, i.e. 3 hours.
- Re-measure length of rods again and compare before and after measurements.

  Please note: Variation can be expected if the implement is left over a time where the temperature change affects the hydraulics by contraction or expansion. Warm to cooler temperatures will cause the series cylinders to move. Make sure measurements are taken at similar temperatures.
- When the 'suspect' cylinder has been identified, disassembly must be carried out in a clean environment. The scoring of barrels and piston seals will usually indicate contamination of some type has entered the system.

Air in the system:

If one or all of the cylinders drift or the system is 'spongy' air is likely entrained in the system. Check for air bubbles going back to the tank or by removing the return line and catching oil in a clean container. With the rod clevises disconnected and the cylinders horizontal (ports at 12 o'clock) or vertical, hold in the re-phasing position until no aerated oil flows.

Please note: Check the reservoir levels when carrying out this exercise. Once the air has been pushed out of the system the reservoir can become low. This can introduce air into the system again.

TORQUE LIMITER

Torque Limiter Run In & Repair

Tools Required: 1/2" or M13 box wrench or socket.

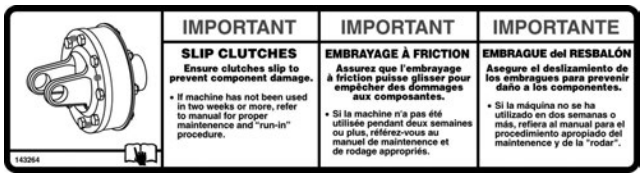

Run-In of the Friction Clutch

(Necessary for all new clutches and clutches that have not been operated for (1) season or approximately 60 days.)

1. Make sure the tractor is off and the PTO is disengaged.
2. Disconnect the driveline from the tractor.
3. Locate the long bolts on the O.D. of the clutch pak. Loosen the bolts until all are finger tight, then tighten each one half a turn.
4. Attach the implement to the tractor and the driveline to the tractor PTO. Stand clear.
5. Turn the tractor on. Engage the PTO clutch and run for a few seconds, or until the clutch visibly smokes, then disengage the PTO.
6. Make sure the tractor is off and the PTO is disengaged.
7. Disconnect the driveline from the tractor.
8. Tighten the long bolts on the O.D. of the clutch pak until the compression plate is in full contact with the housing.
9. Grease the fitting on the yoke using Shell Super Duty or an equivalent lithium grease.

Repair And Rebuilding

Disassembly

1. Place the clutch and universal joint assembly on a bench, with the end of the clutch accessible.
2. Remove the long bolts on the outside of the housing that hold the friction pack together.
3. Remove the plate(s) and all internal components, leaving the yoke/hub intact.
4. Discard the friction discs if worn below 1/16".

Inspection

6. Inspect the steel and iron parts for wear, warpage or cracking and replace if necessary.
7. Inspect the yoke/hub for looseness. If there is more than .03 end play, replace.
8. Clean any, rust or dust from the plate surfaces with a wire brush or steel wool.

Assembly

9. Place one new friction disc inside the housing, then the separator plate, then the other friction disc.
10. Add the pressure plate so that the flat surface rests on the friction disc (the tangs on the plate must fall into the reliefs in the housing).
11. Add the disc spring so that the spring inside diameter contacts the fins of the pressure plate.
12. Assemble the compression plate and all long bolts, making sure that all nuts are in their pockets. Tighten all long bolts to 20 ft-lbs.

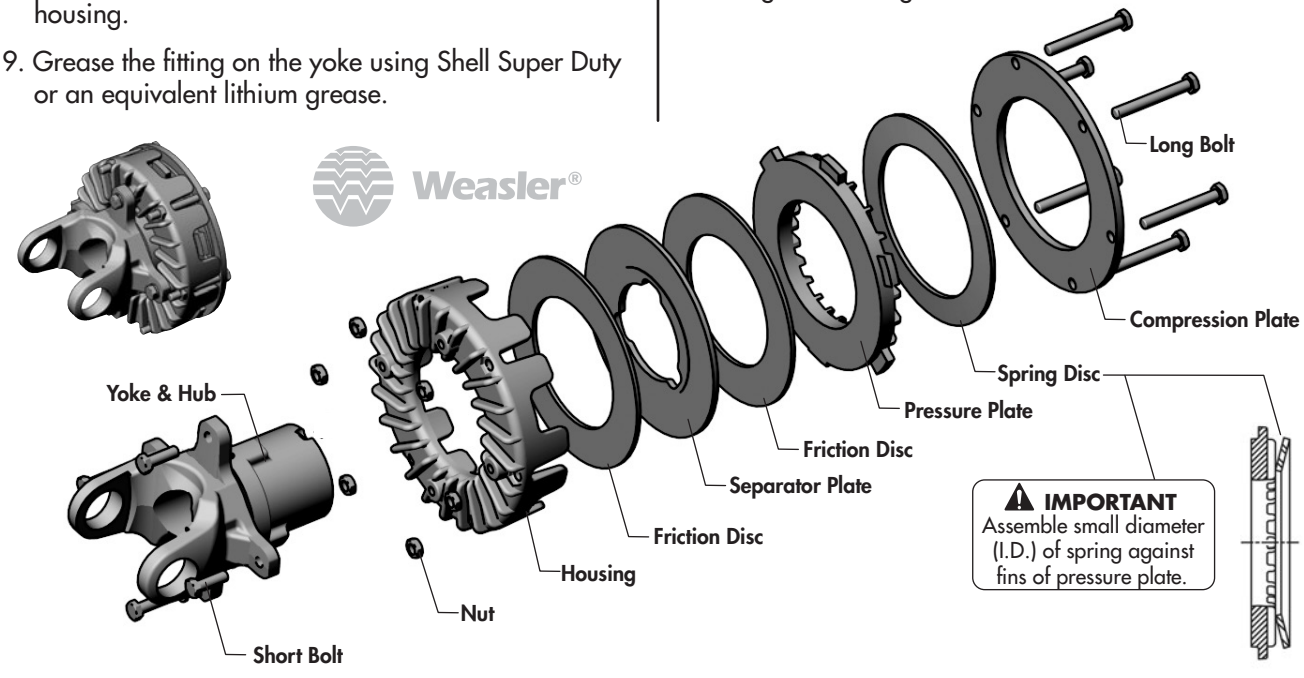

How To Store Your Cutter

PREPARING FOR STORAGE

When storing the cutter for the season or an extended period of time it is important to follow the following procedures in order to extend the life of your cutter.

Note: *The cutter can be stored in either the wings raised or wings lowered position. If storing with the wings raised position, make sure the wing lock pins are engaged.*

1. Thoroughly clean off cutter of all debris and dirt buildup. Clean any accumulated cuttings off of the under side of the deck. Debris and dirt will draw moisture and may cause corrosion.
2. Paint all parts where necessary.

   Note: *Degelman Yellow Aerosol paint (#133044) is available, ask your dealer.*
3. Put cutter in a dry place.
4. Follow procedures in the Maintenance section to fully lubricate the machine.
5. Check the condition of all blades and blade hardware. Replace if necessary.
6. Inspect the safety shields, guards, transport locks, and other components for damage, wear, or missing hardware. Replace if required.
7. Inspect hydraulic hoses and connections. Repair or replace as necessary.
8. Inspect the condition of safety labels and decals. Replace any missing or illegible decals.
9. If cutter is equipped with used aircraft tires, support cutter with safety stands to take weight off tires. Do not deflate tires. If exposed, put covers over tires to protect them from sunlight, oil, and grease.
10. Place PTO on top of hitch in the PTO cradle. Remove front half and store indoors. Keep PTO off ground.
11. Fully tighten socket head screws on the driveline clutches to relieve pressure on the linings. For best performance, keep the clutch in a dry place to help prevent sticking.
12. Apply grease to any exposed hydraulic cylinder rods and any threaded adjustment screws to prevent rusting.

NOTE: *If cutter is to be stored in the wings raised position, check that the two 1/4" water drainage holes in the outer wing wheel rims are clear of debris.*
If your rims do not have the drainage holes, it is recommended to add them.

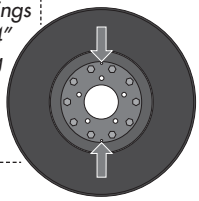

REMOVING FROM STORAGE

1. Review Operator's Manual and check adjustments.
2. Follow procedures in the Maintenance section to check gearbox oil levels and to fully lubricate the machine.
3. Inspect hydraulic hoses and connections. Repair or replace as necessary.
4. If using aircraft tires, check the air pressure (42 PSI).
5. Check all hardware for tightness.
6. Perform "*Run-In of the Friction Clutch*" as described in the maintenance section.
7. If any major components have been replaced, make sure they run properly.

Part Overview

Exploded Overview: REV1500

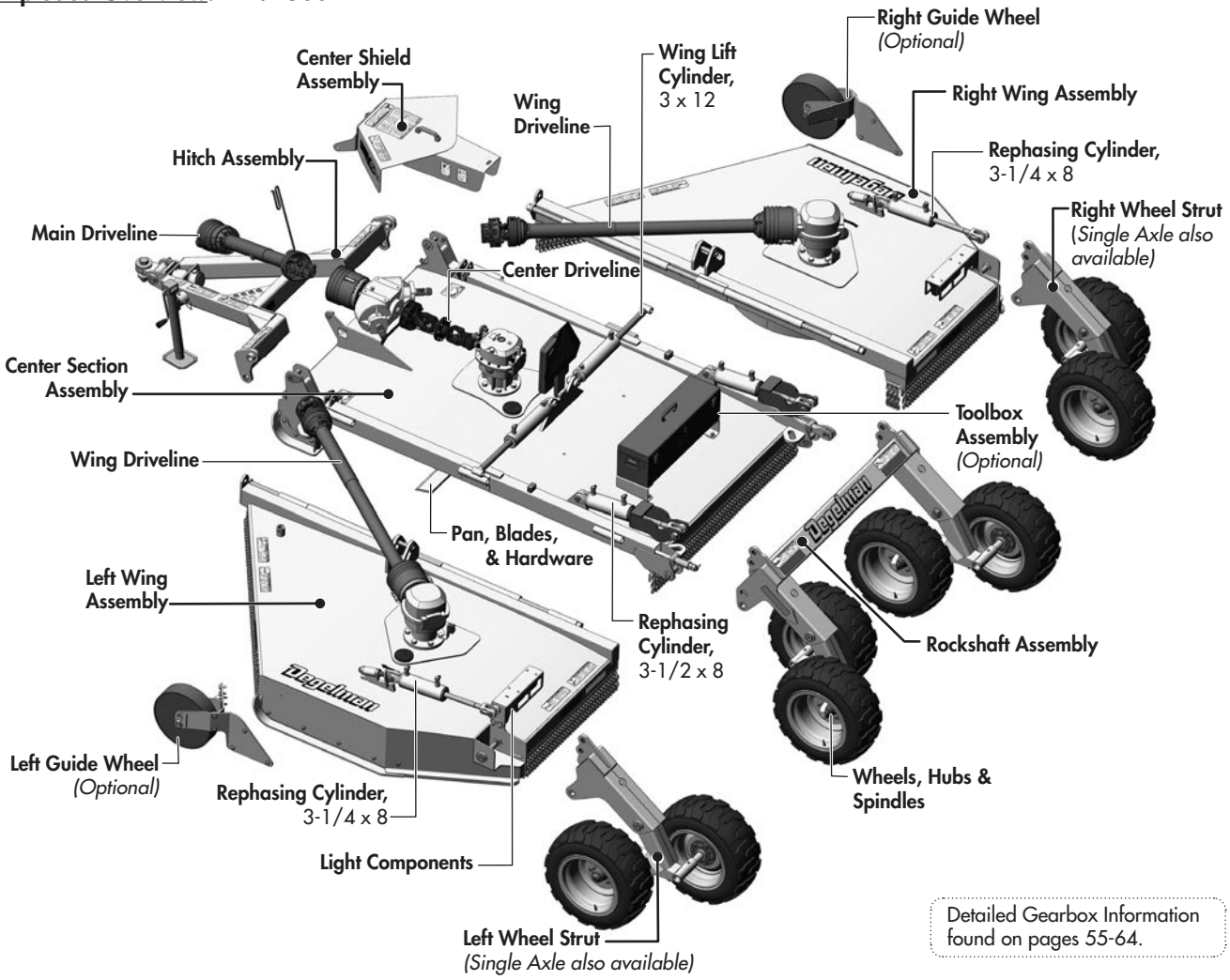

Detailed Gearbox Information found on pages 55-64.

COUNTER WEIGHT ASSEMBLY - REV1000

General Assembly information above is identical for both the REV1500 and the REV1000 with the exception of the counterweight that replaces either the left or right wing.

503570 - Counter Weight Wing

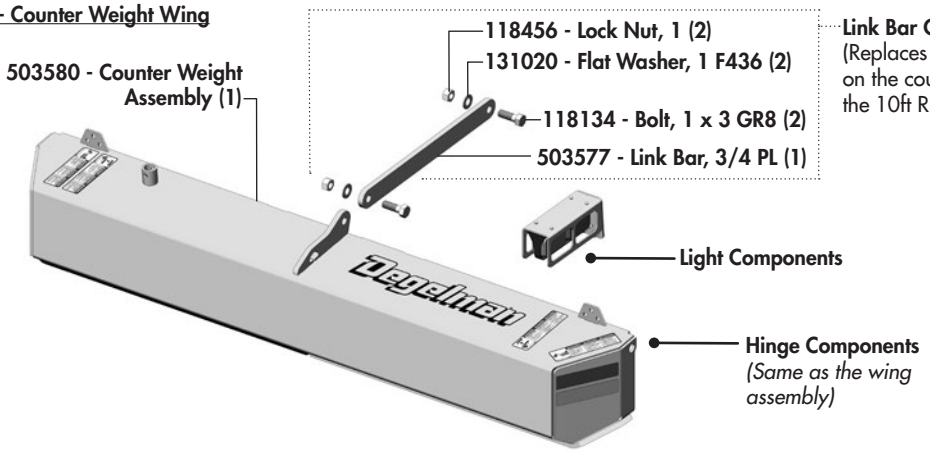

Hitch Assembly & Center Shield

CENTER SHIELD ASSEMBLY

503310 - Center Shield Assembly (1)

- includes -

133093 - Capscrew, M8 x 1.25 x 30mm (2)

133092 - Plastic Handle (1)

133094 - Nut, M8 x 1.25mm (2)

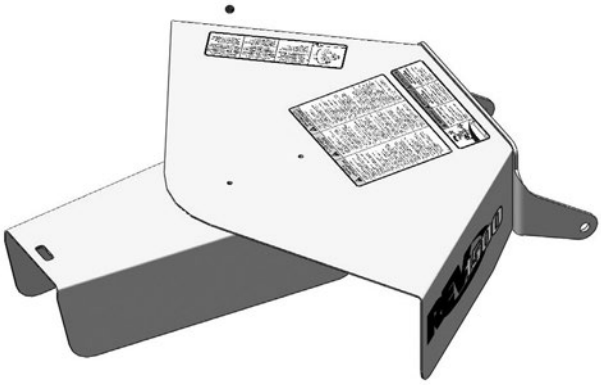

PRECISION HITCH ASSEMBLY

500340 - Precision Hitch Assembly

- includes -

118965 - Bolt, 1-1/4 x 5-1/2 UNF GR8 (1)

500325 - Washer, 4" OD (1)

118951 - Retaining Ring, 2" Ext. (1)

500318 - Hitch Tongue (1)

comes with...

118950 - Bushing, 2-1/2 OD (1)

118336 - Grease Fitting, 1/4 (1)

500324 - Bushing, 4" OD (1)

500327 - Washer, 3" OD (1)

118962 - Lock Nut, 1-1/4 UNF GR8 (1)

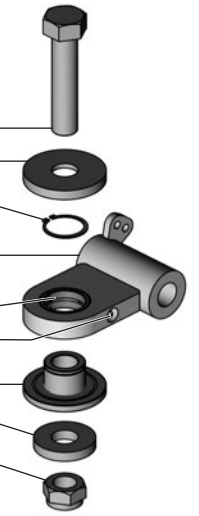

- OR -

CLEVIS HITCH ASSEMBLY

500335 - Clevis Hitch



FRONT HITCH ASSEMBLY

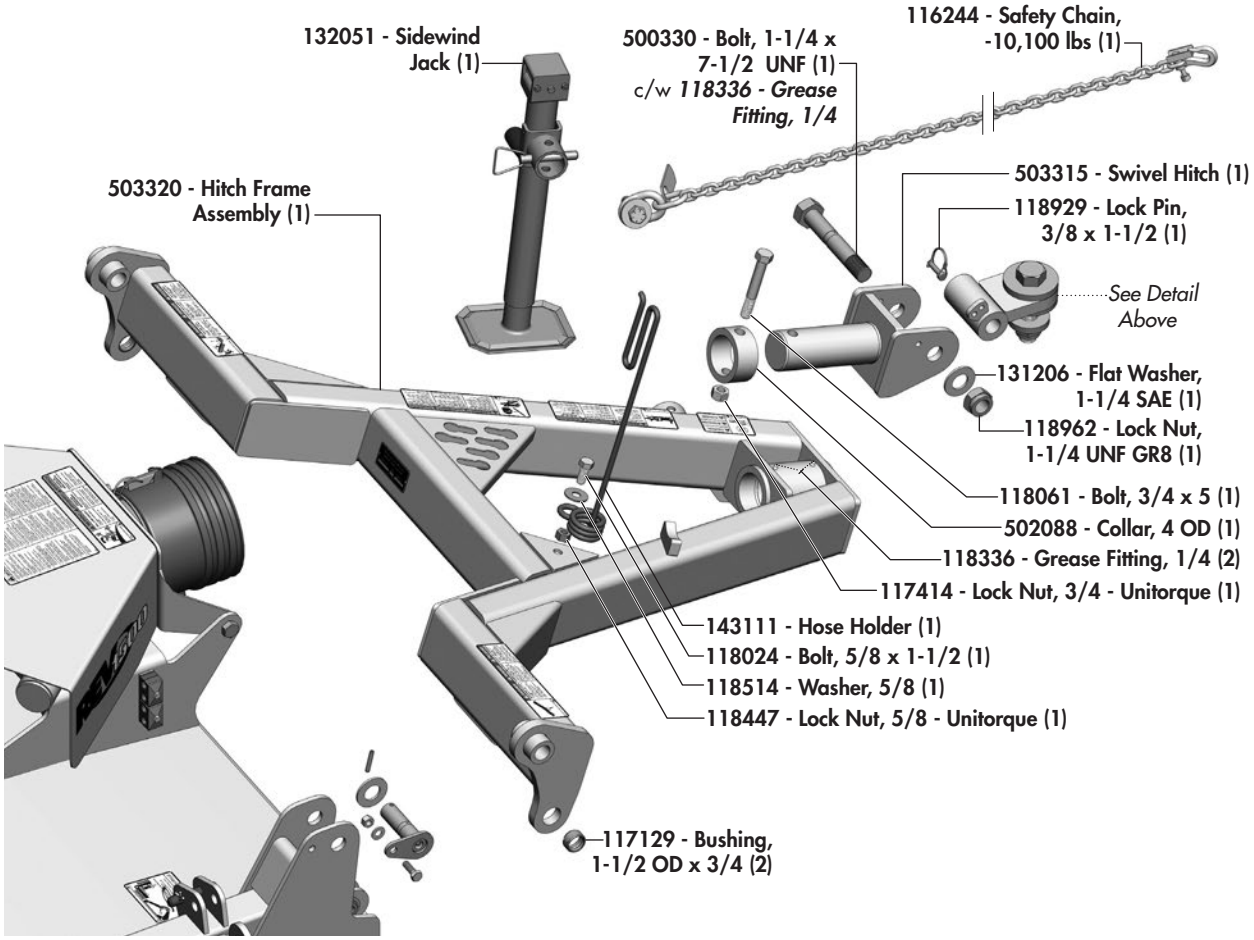

Right / Left Wing Assembly *(Right Wing Assembly Shown)*

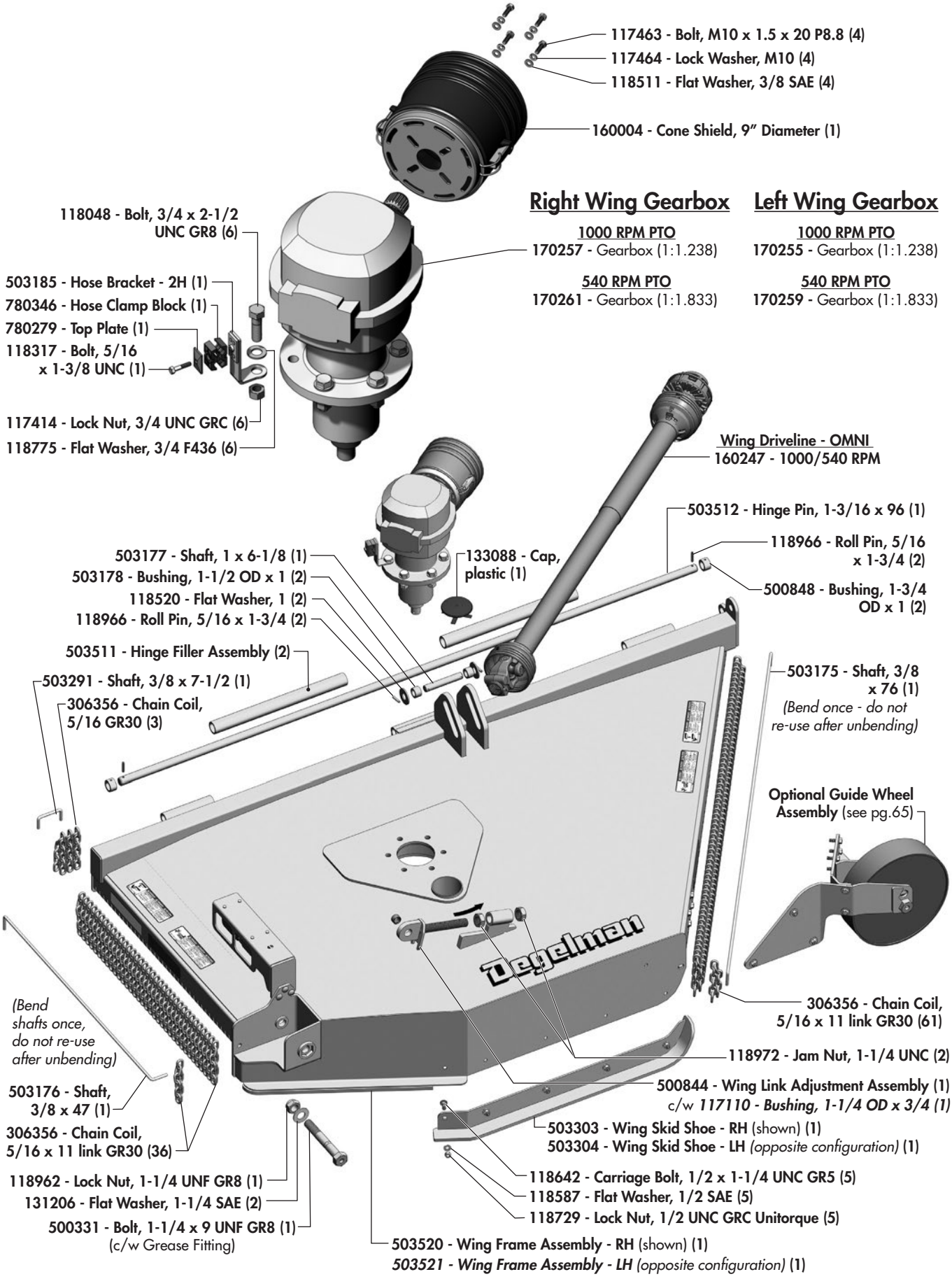

Center Frame Assembly

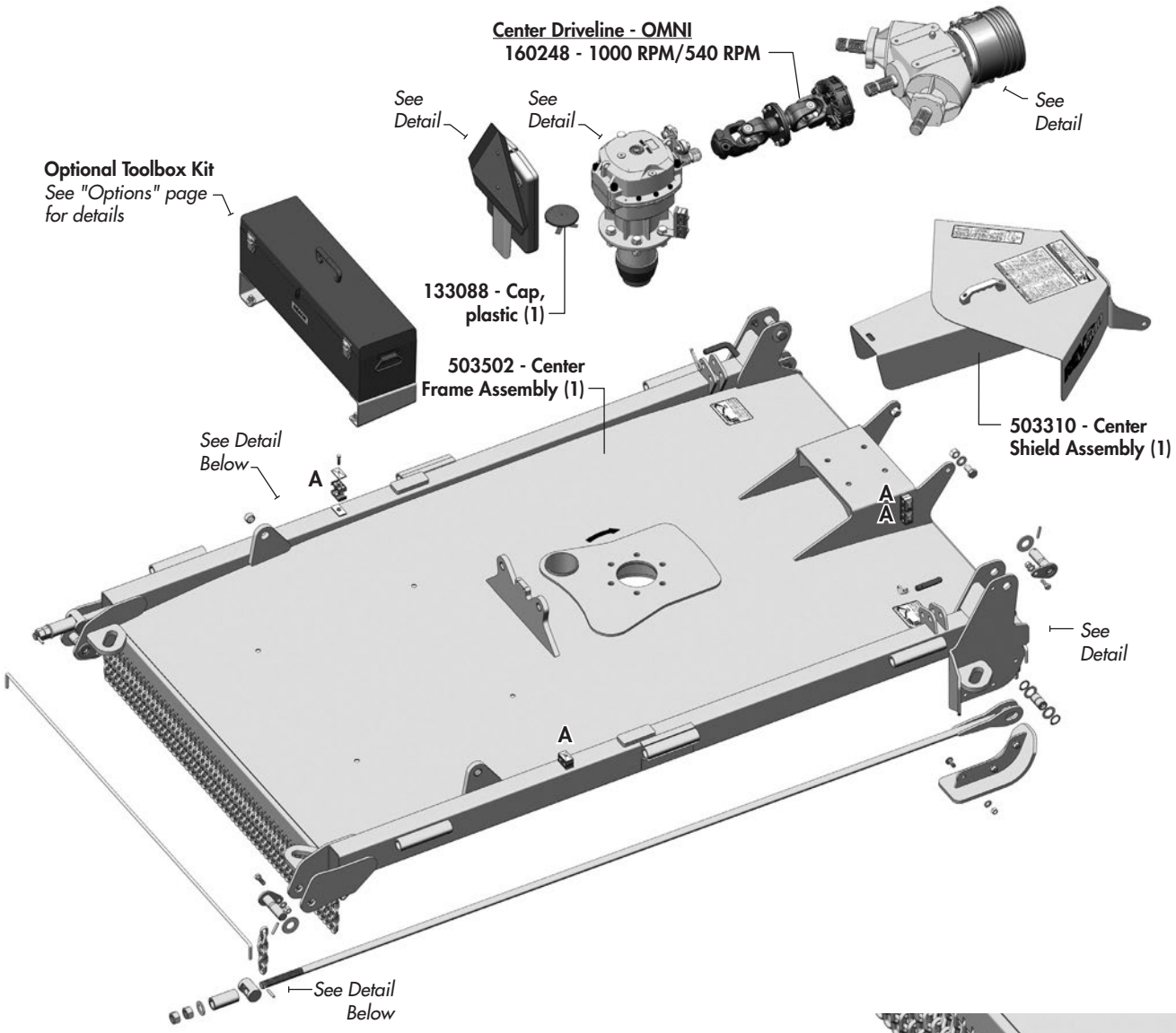

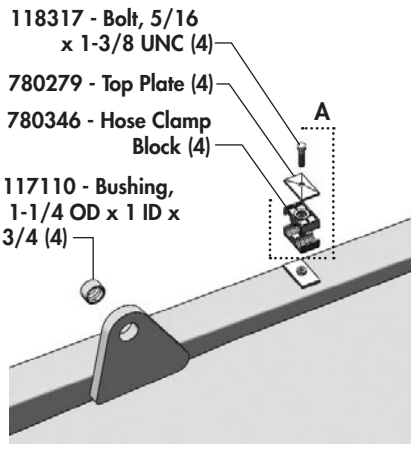

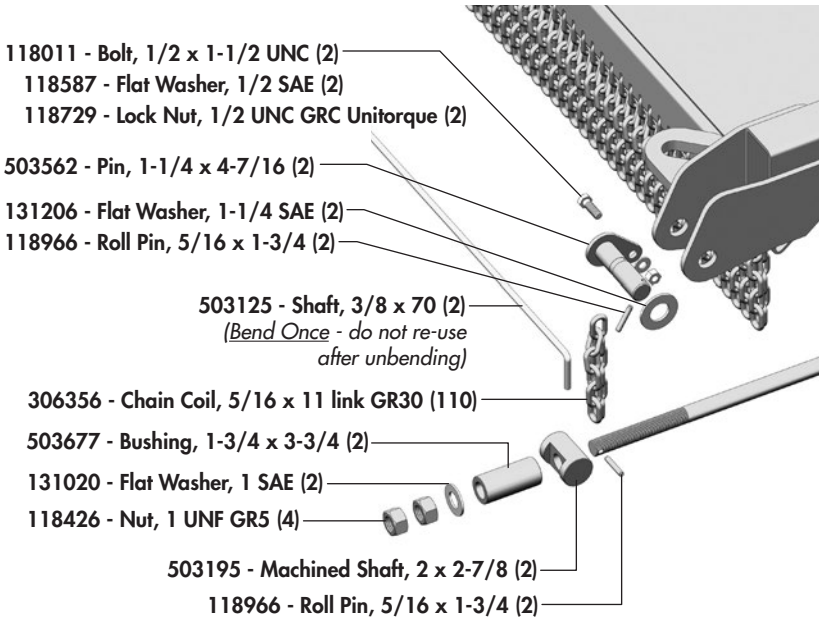

Center Frame Assembly

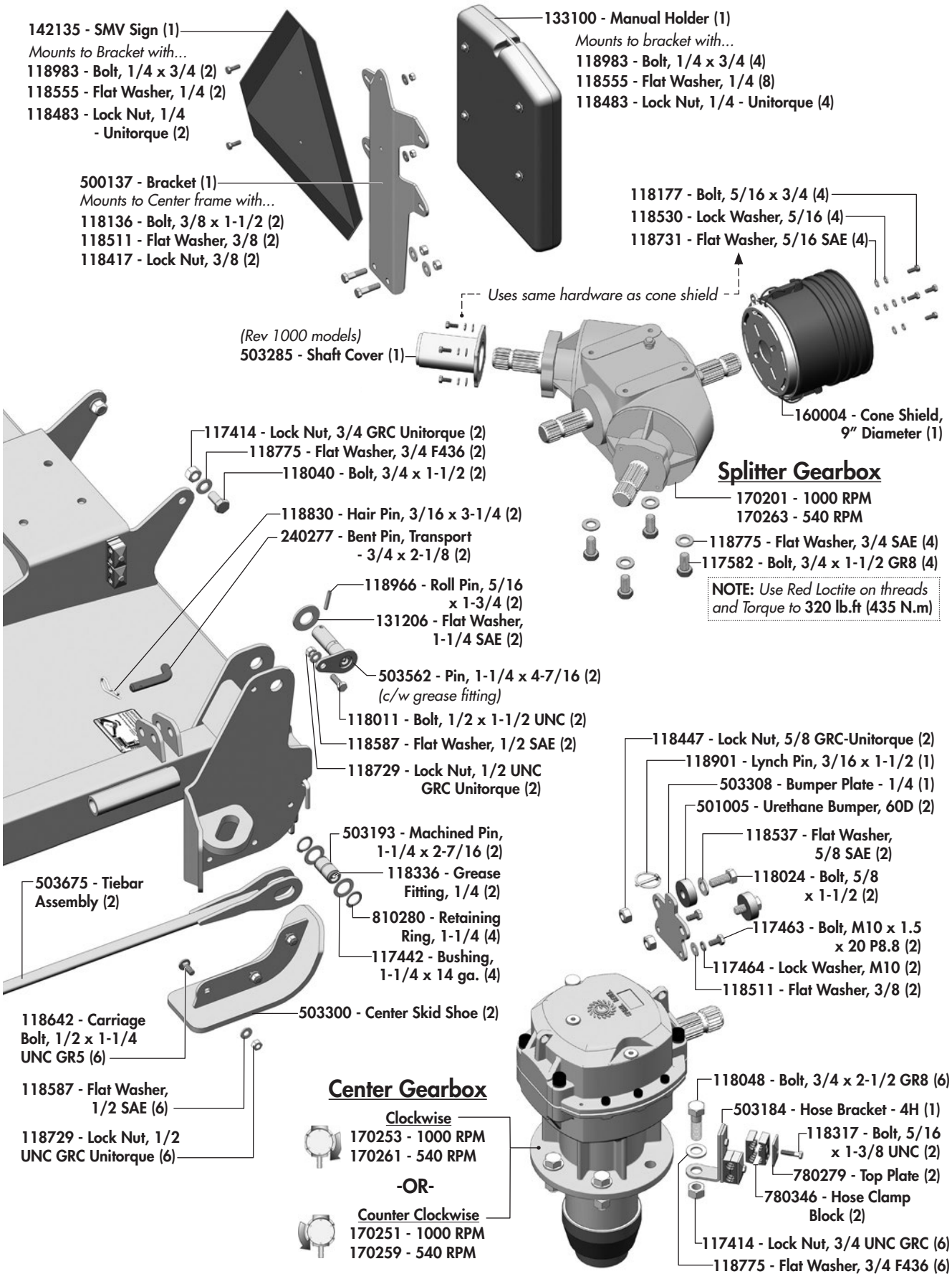

Wing Wheel Strut Assemblies

SINGLE AXLE STRUT ASSEMBLY

(RH wing Single Axle configuration shown.)

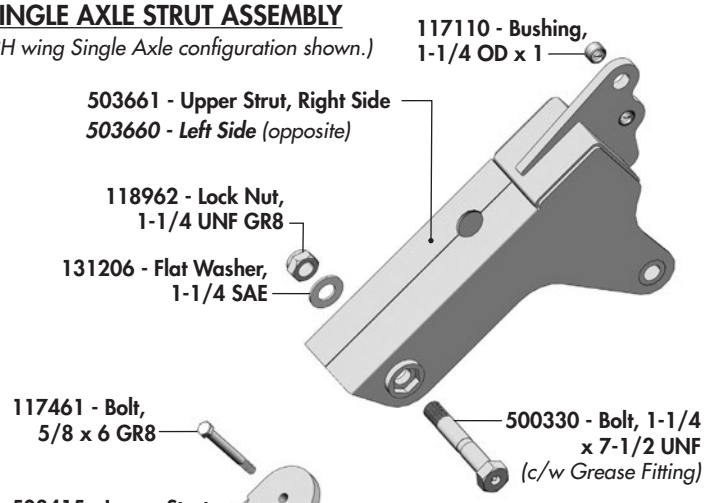

Suspension Components

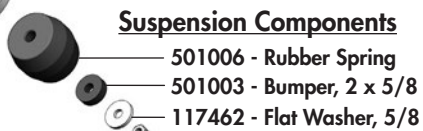

Single Axle

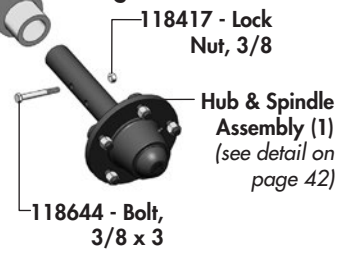

WING SUSPENSION DETAIL

Pre-loading of rubber spring required on all strut assemblies. Exposed thread length should be approximately **3/8"** when using correct hardware.

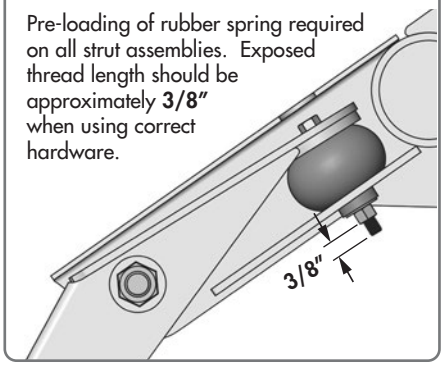

Note: The wing wheel strut assemblies are either ***single*** or ***walking axle*** configurations depending on the option you chose when purchasing your rotary cutter. The individual LH & RH upper strut assemblies are the same for both single or walking axle models but the lower strut assemblies are different.

WALKING AXLE STRUT ASSEMBLY

(LH wing Walking Axle configuration shown.)

Walking Axle

503555 - Walking Axle (as shown)
503554 - Walking Axle *(opposite configuration)*

Rockshaft Assembly

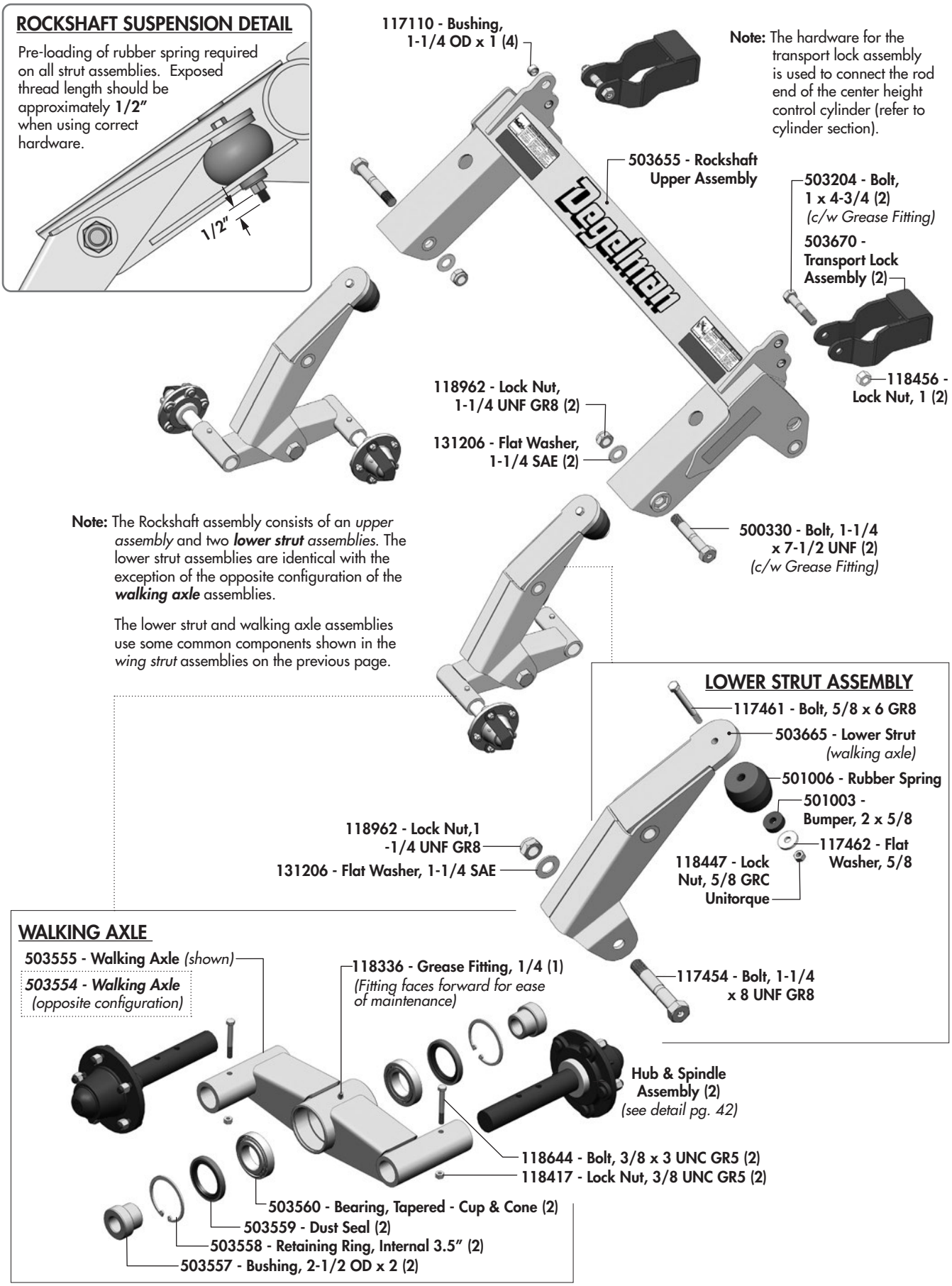

Hubs & Spindles

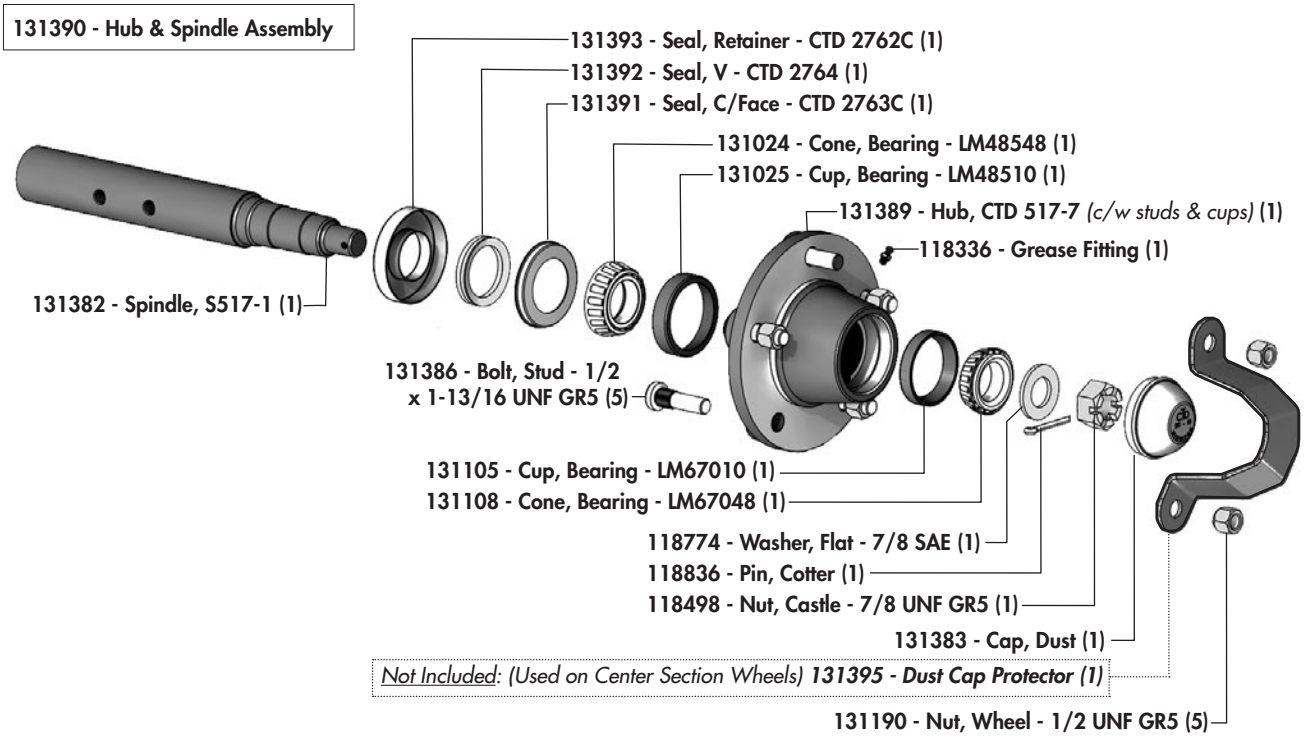

Wheels

131315 - Laminated Tire (21")



Forward Movement of Cutter

Note the Curvature *of the laminated sections.*

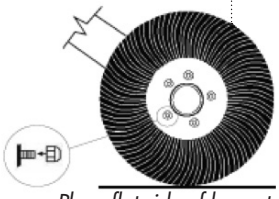

Place flat side of lug nut against wheel.

NOTE: *Torque Lug Nuts to* **70-75 lb.ft** ***(100 N.m)***
Transport speed: **DO NOT EXCEED 20 mph** ***(32 km/h)***

131384 - Recapped Foam Filled Aircraft Tire (22")



NOTE: *If cutter is to be stored in the wings raised position, check that the two 1/4" water drainage holes in the outer wing wheel rims are clear of debris. If your rims do not have the drainage holes, it is recommended to add them.*

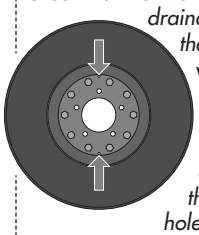

131440 - Large Air Filled Tire, LH (27")
131441 - Large Air Filled Tire, RH (27")

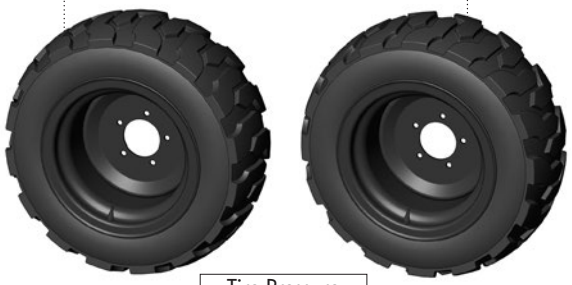

Tire Pressure
60 PSI ***(415 kPa)***

131442 - Large Foam Filled Tire, LH (27")
131443 - Large Foam Filled Tire, RH (27")



Blade Carrier Assemblies

Wing Section Components

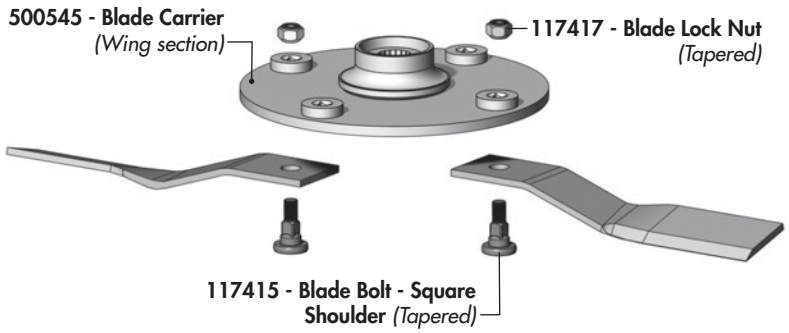

Note: Refer to gearbox section of manual for hardware that mounts blade carriers to gearboxes (ie. castle nuts and cotter pins.)

Center Section Components

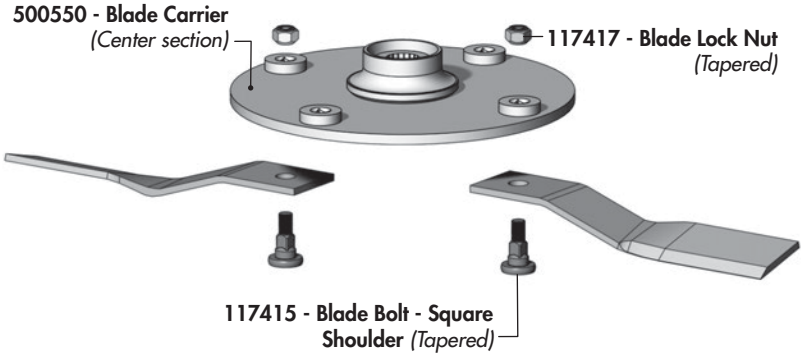

Note: Refer to gearbox section of manual for hardware that mounts blade carriers to gearboxes (ie. castle nuts and cotter pins.)

Blade Options

Blades - 5" High Suction - Twist

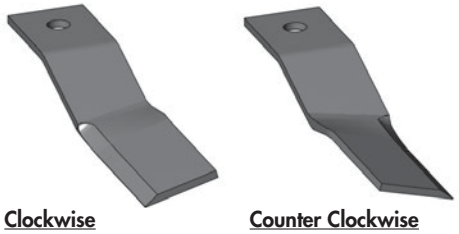

Clockwise
501027 - Blade, 5" High Suction - Twist

Counter Clockwise
501028 - Blade, 5" High Suction - Twist

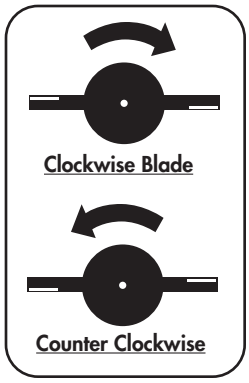

Cylinders

GENERAL OVERVIEW

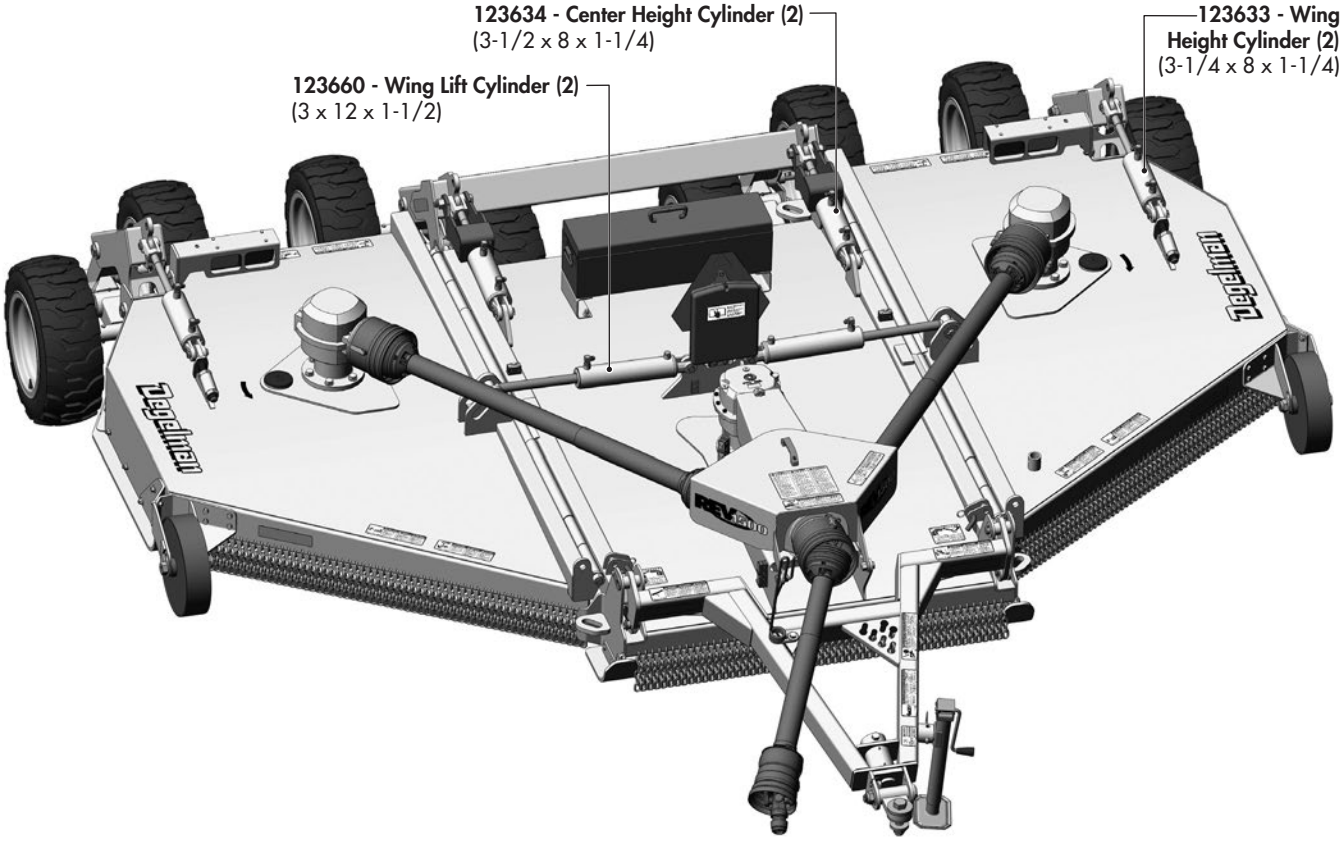

CENTER HEIGHT CONTROL CYLINDER

123634 - Cylinder, 3-1/2 x 8 x 1-1/4

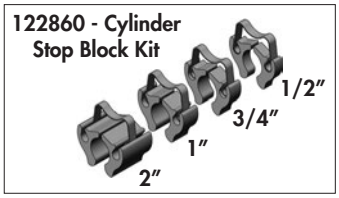



Replacement Parts:
- **123641 - Cylinder Pin Kit**
- **123646 - Seal Kit, 3-1/2 x 1-1/4**

WING HEIGHT CONTROL CYLINDER

123633 - Cylinder, 3-1/4 x 8 x 1-1/4

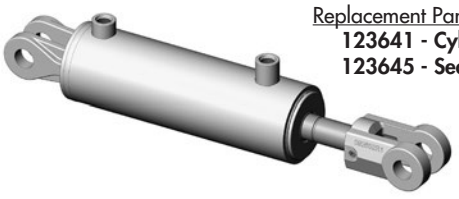

Replacement Parts:
- **123641 - Cylinder Pin Kit**
- **123645 - Seal Kit, 3-1/4 x 1-1/4**

WING LIFT CYLINDER

123660 - Cylinder, 3 x 12 x 1-1/2

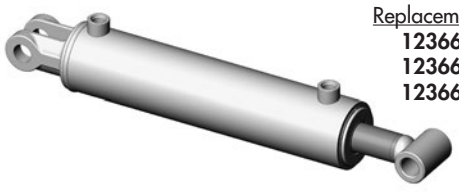

Replacement Parts:
- **123661 - Seal Kit, 3 x 12 x 1.5**
- **123662 - Cylinder Pin**
- **123663 - Cotter Pin**



Hydraulic Schematics: REV1500

HEIGHT CONTROL CYLINDERS

(Note: Cylinder details are shown on *"Cylinders"* page.)

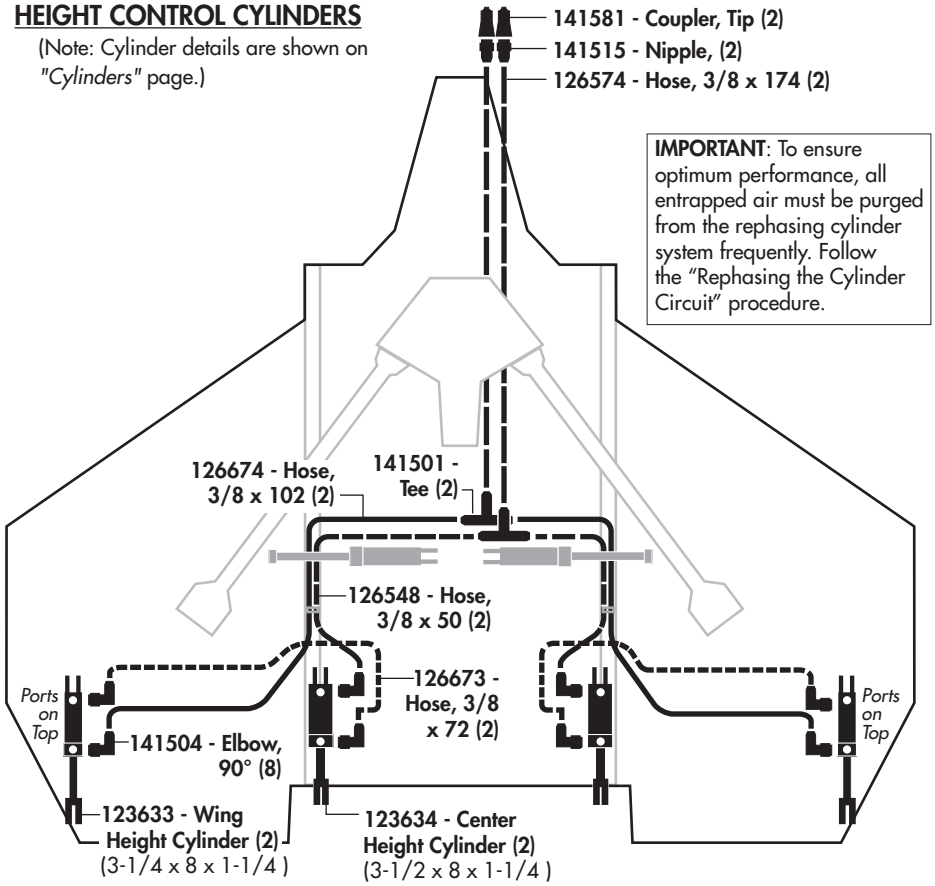

IMPORTANT: To ensure optimum performance, all entrapped air must be purged from the rephasing cylinder system frequently. Follow the "Rephasing the Cylinder Circuit" procedure.

HYDRAULIC FITTING GUIDE

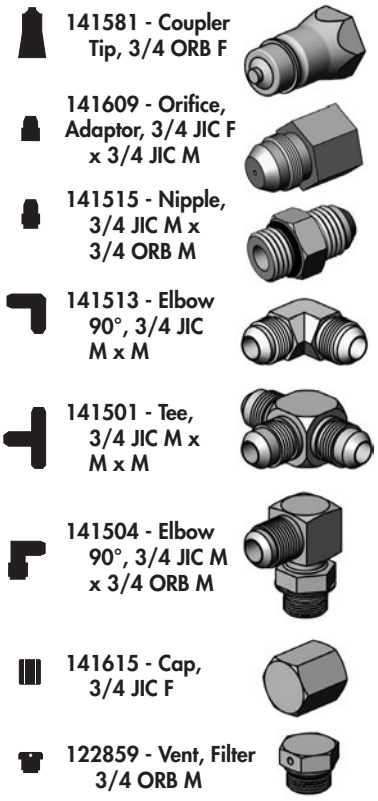

WING LIFT CYLINDERS

(Note: Cylinder details are shown on *"Cylinders"* page.)

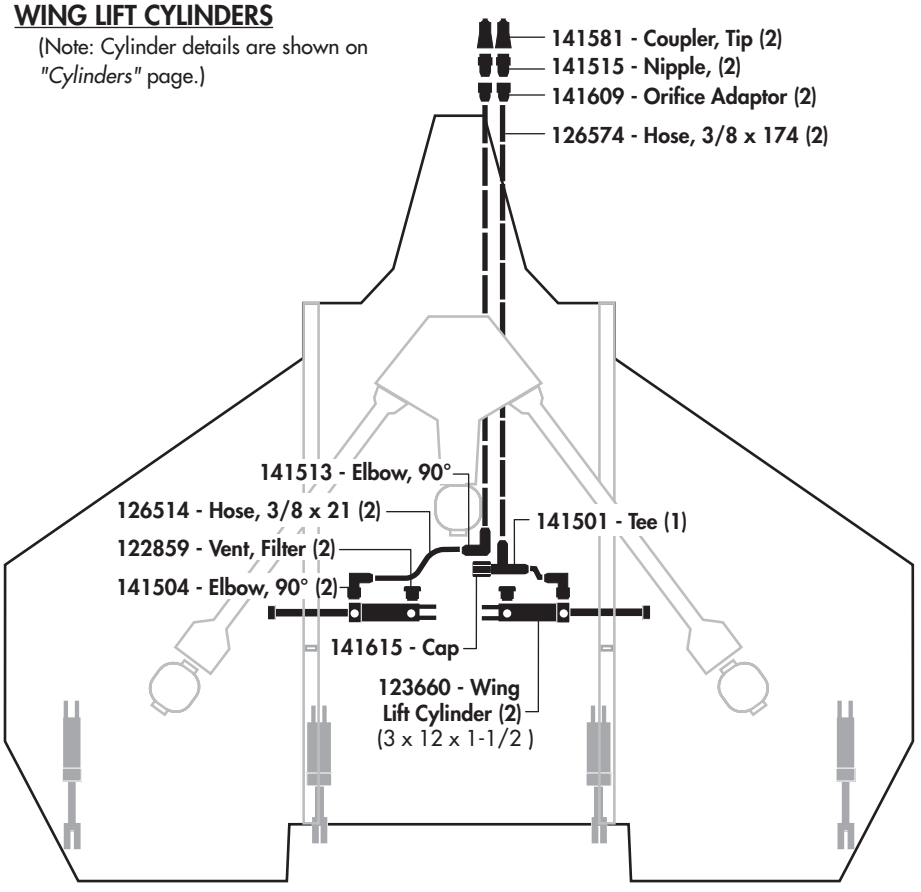

Hose Routing Options

- Standard hose routing for independent wing lift is shown in the diagram to the left.
- An alternate hose routing for combined wing lift is shown in diagram below.

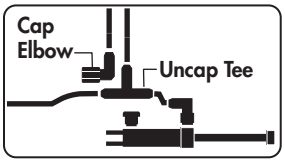

503443 - Optional Double Acting Wing Lift Kit

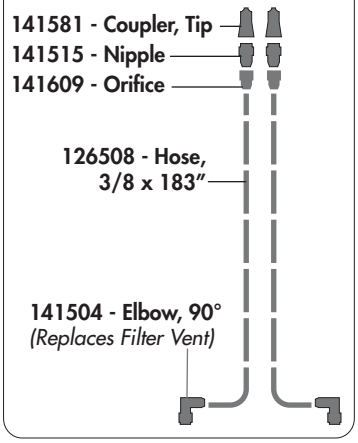

Hydraulic Schematics: REV1000

HEIGHT CONTROL CYLINDERS

(Note: Cylinder details are shown on *"Cylinders"* page.)

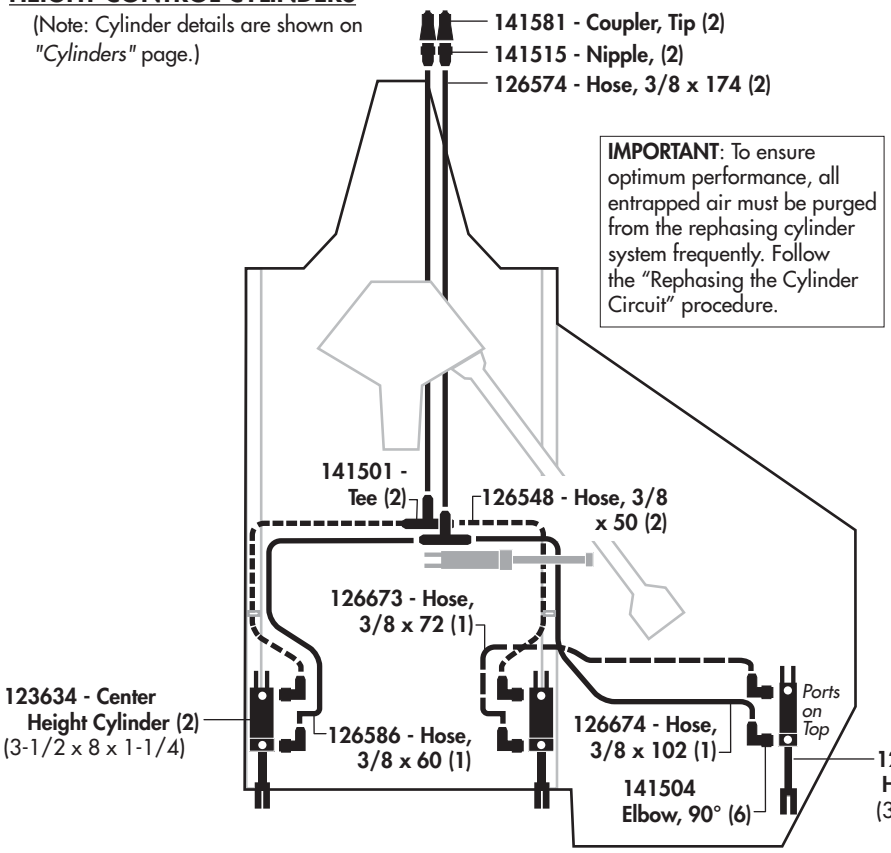

HYDRAULIC FITTING GUIDE

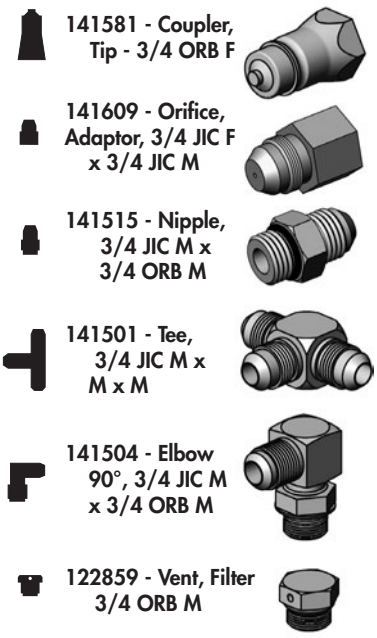

WING LIFT CYLINDERS

(Note: Cylinder details are shown on pages 43-44)

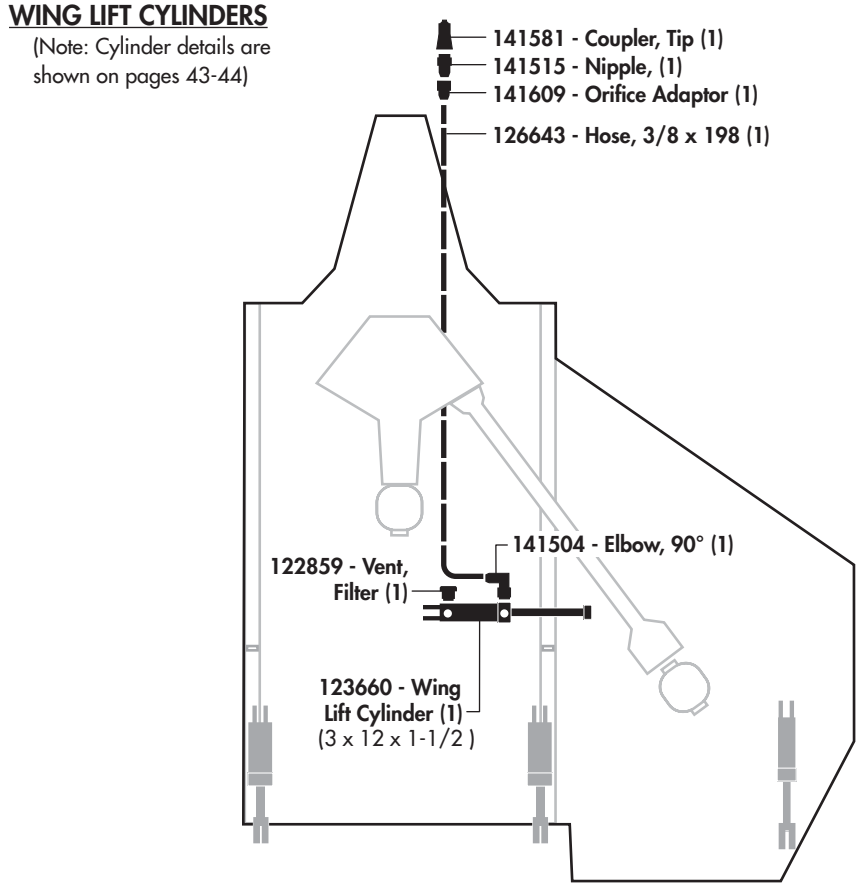

503444 - Optional Double Acting Wing Lift Kit

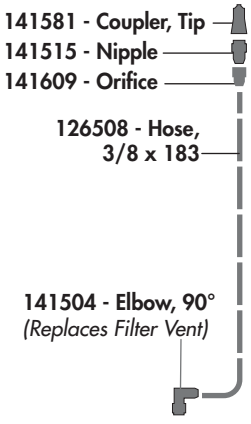

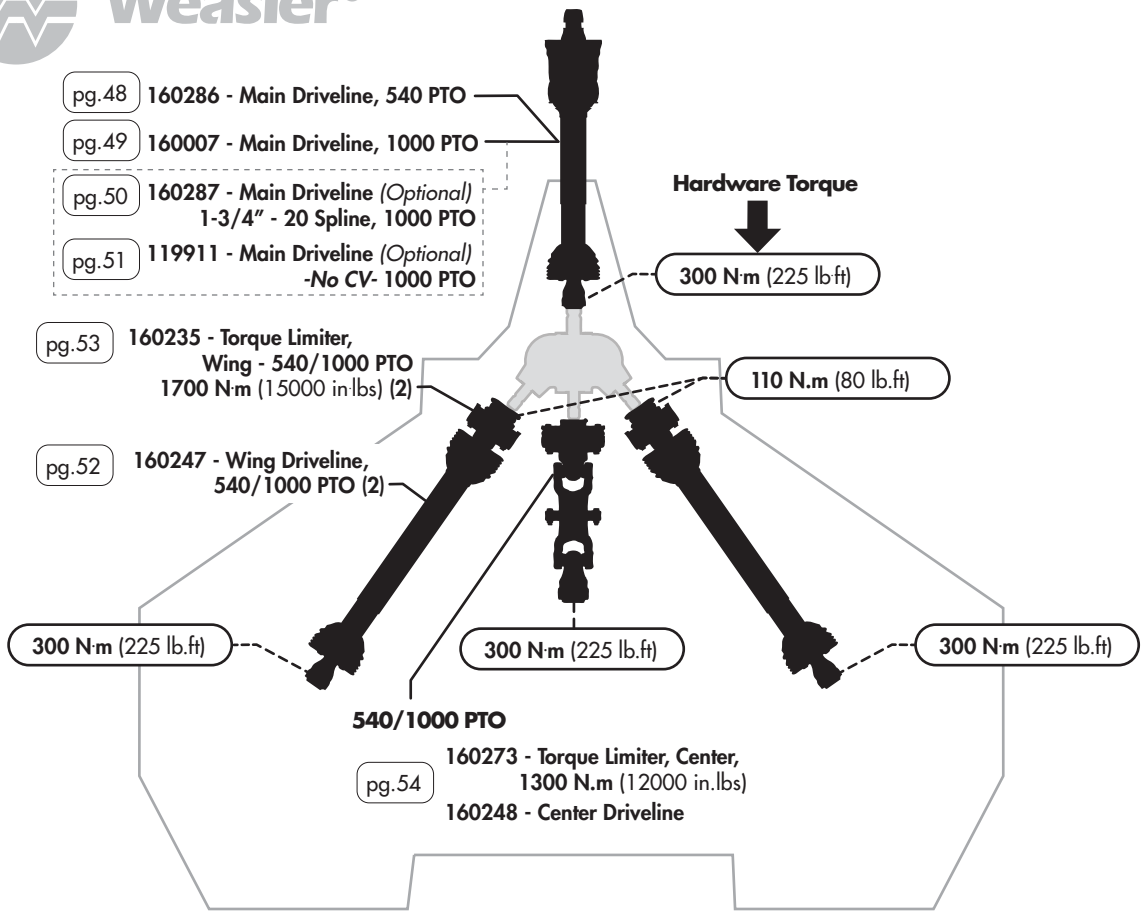

540 PTO

160286 - Main Driveline, 540 PTO (1) pg.48

160248 - Center Driveline (1) pg.54

160273 - Torque Limiter, Center 1300 N·m (12000 in·lbs) **(1)** pg.54

160247 - Wing Driveline, 540/1000 PTO (2) pg.52

160235 - Torque Limiter, Wing 1700 N·m (15000 in.lbs) **(2)** pg.53

1000 PTO

160007 - Main Driveline, 1000 PTO (1) pg.49

160287 - Main Driveline *(Optional)* **1-3/4" - 20 Spline, 1000 PTO (1)** pg.50

119911 - Main Driveline *(Optional)* ***-No CV-*** **1000 PTO (1)** pg.51

160248 - Center Driveline (1) pg.54

160273 - Torque Limiter, Center 1300 N·m (12000 in.lbs) **(1)** pg.54

160247 - Wing Driveline, 540/1000 PTO (2) pg.52

160235 - Torque Limiter, Wing 1700 N·m (15000 in.lbs) **(2)** pg.53

Note: The direction of rotation of the outer drivelines **(B)** is opposite to the front and center driveline rotation **(A).**

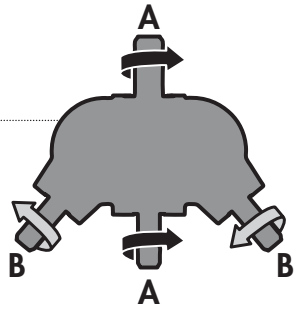

160286 - 540 PTO Driveline - Main

Universal Joint Telescoping Assembly with Guard

Cat. 6, 80° C.V., 1-3/8" - 6 Spline Yoke

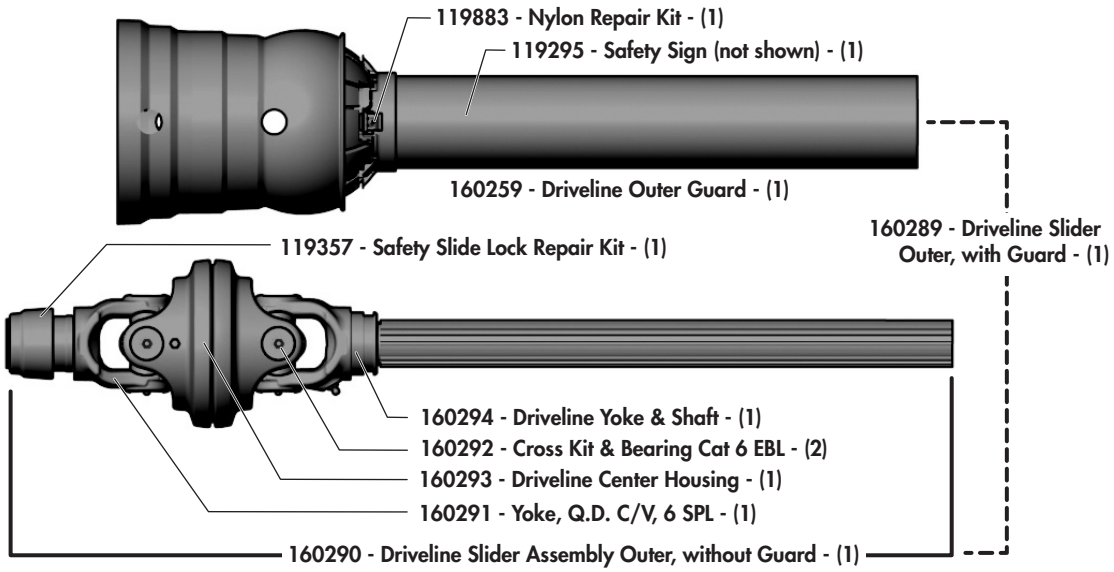

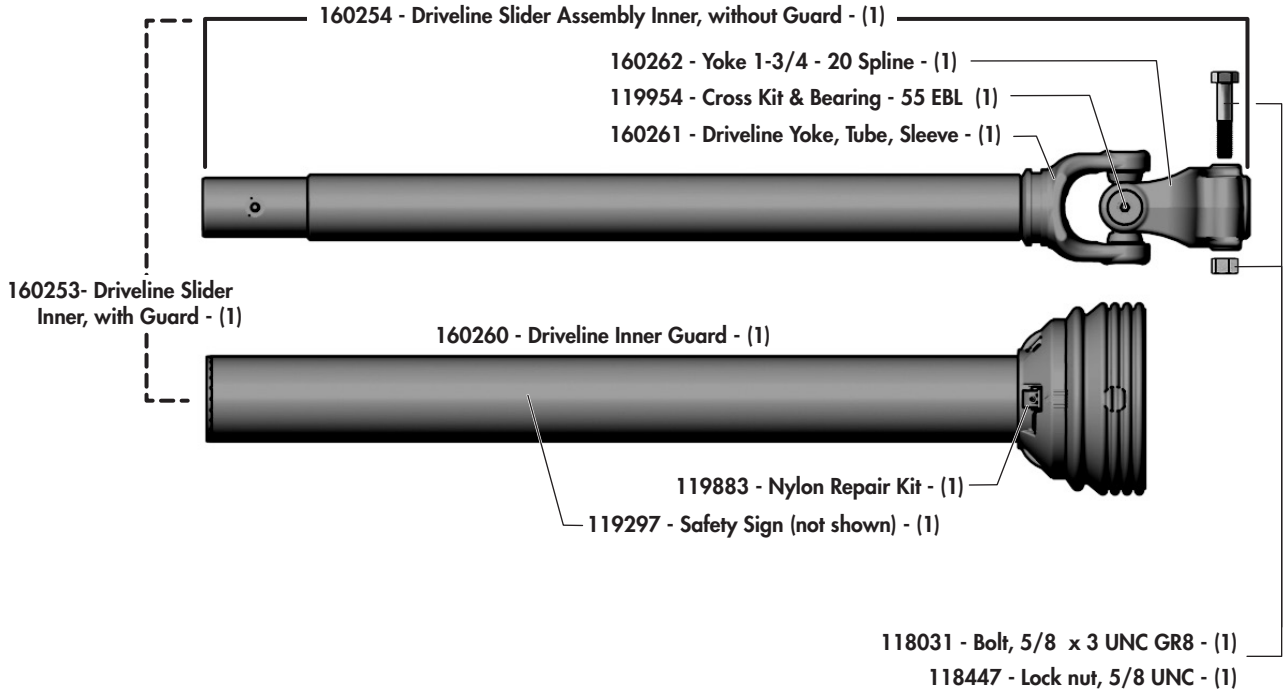

160007 - 1000 PTO Driveline - Main

Universal Joint Telescoping Assembly with Guard

Cat. 6, 80° EBL C.V., 1-3/8" - 21 Spline Yoke

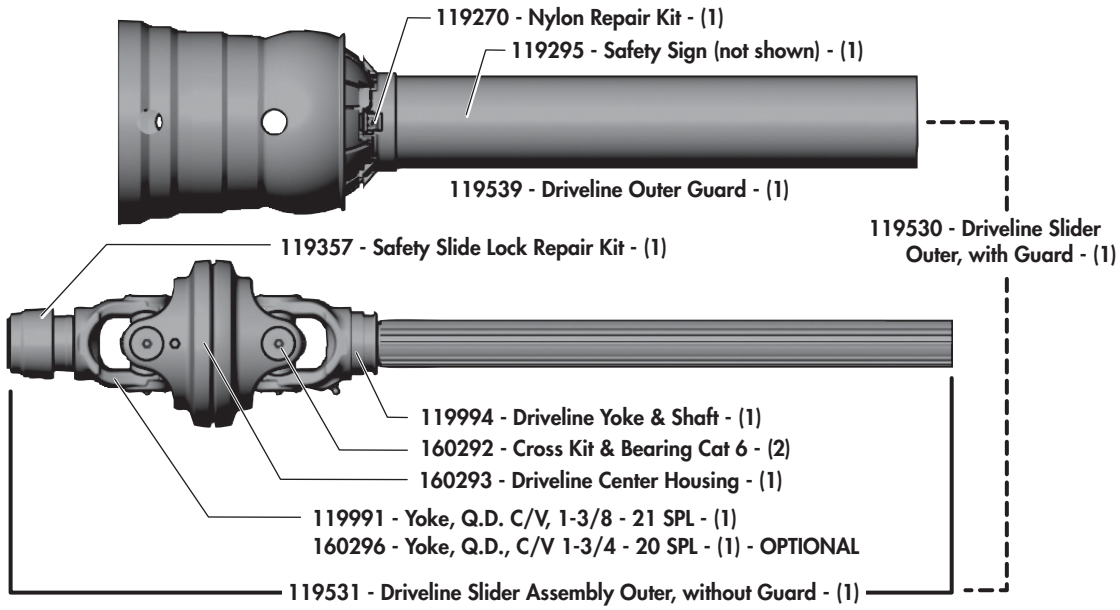

119529 - Driveline Guard Set - Inner & Outer - (1)

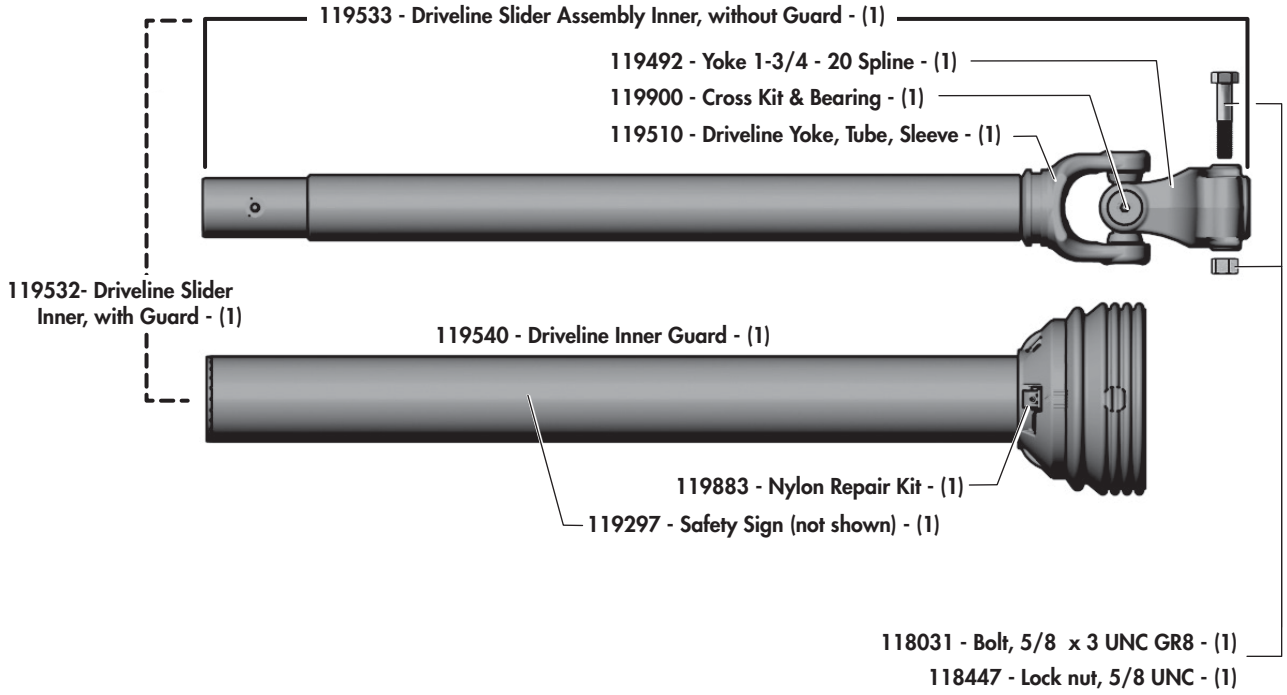

160287 - 1000 PTO Driveline - Main

Universal Joint Telescoping Assembly with Guard

Cat. 6, 80° EBL C.V., 1-3/4" - 20 Spline Yoke

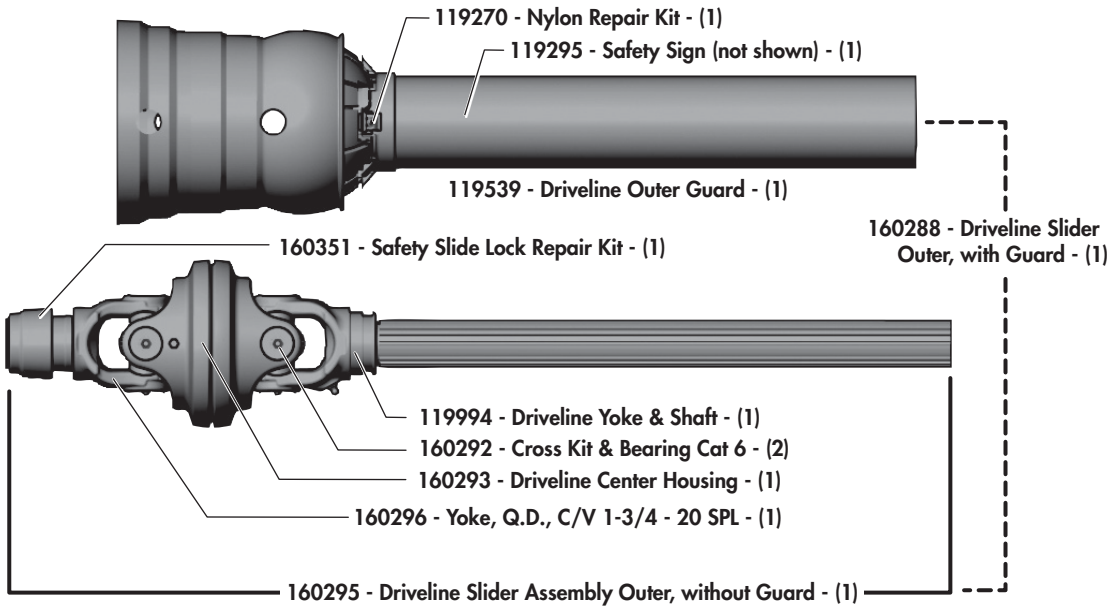

119529 - Driveline Guard Set - Inner & Outer - (1)

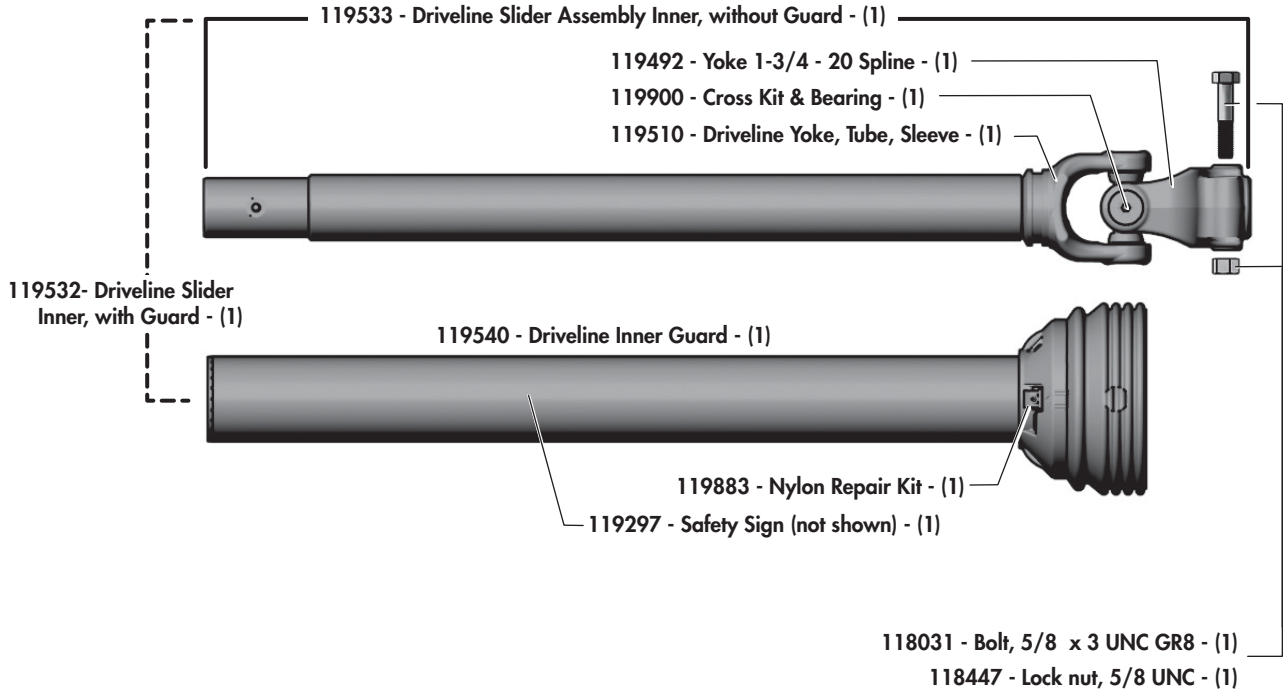

119911 - **1000 PTO Driveline - Main** (No CV)

(Optional) Universal Joint Telescoping Assembly with Guard

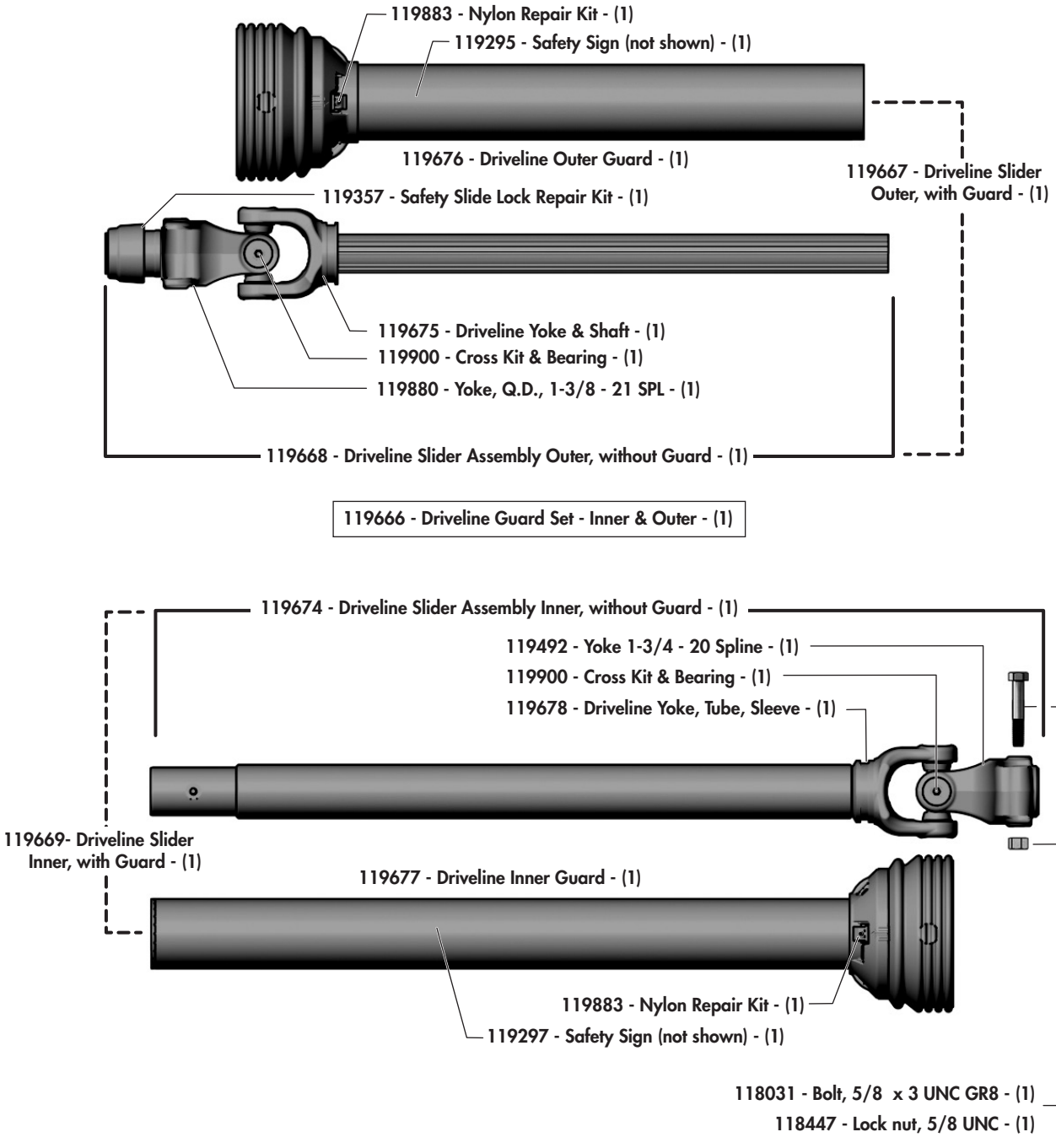

160247 - 540/1000 PTO Driveline - Wing

Universal Joint Telescoping Assembly with
Non-Adjusting Friction Clutch

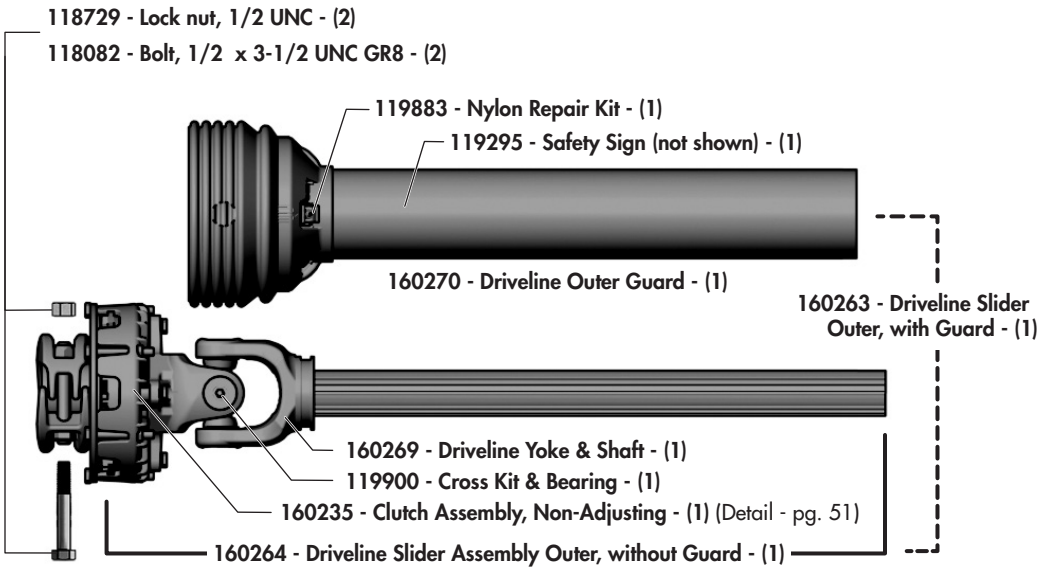

160267- Driveline Guard Set - Inner & Outer - (1)

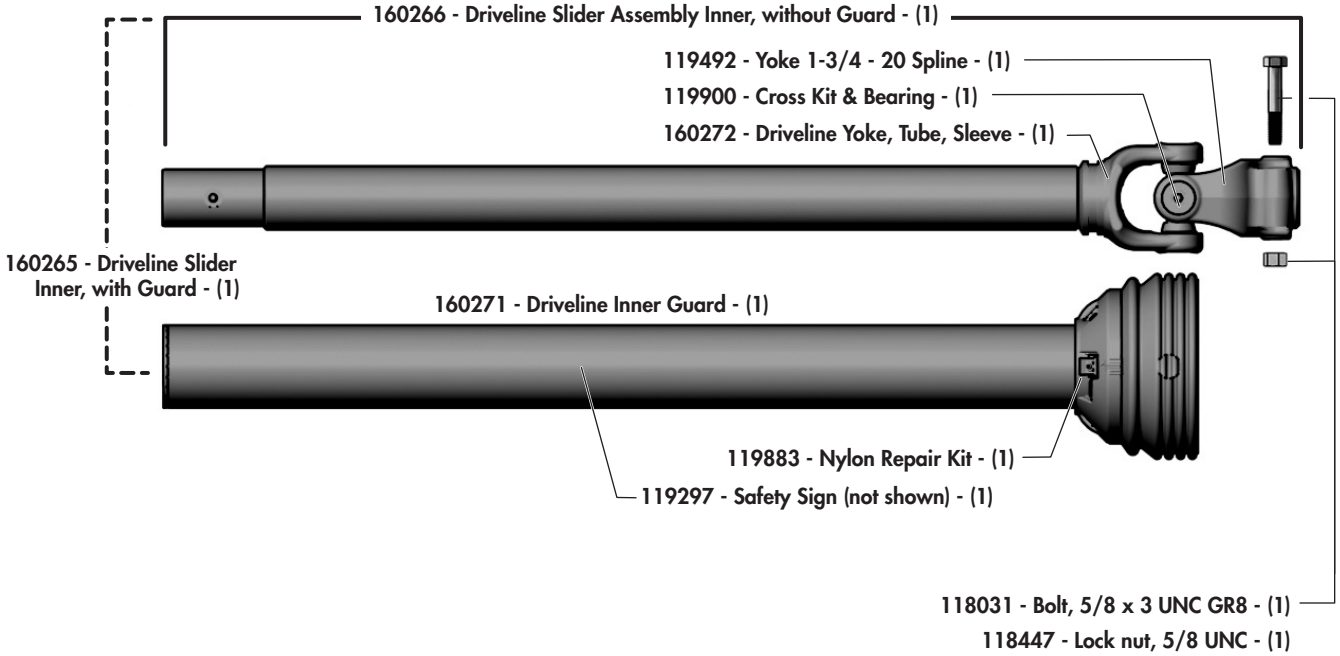

Weasler®

WING - 160235 - 540/1000 PTO

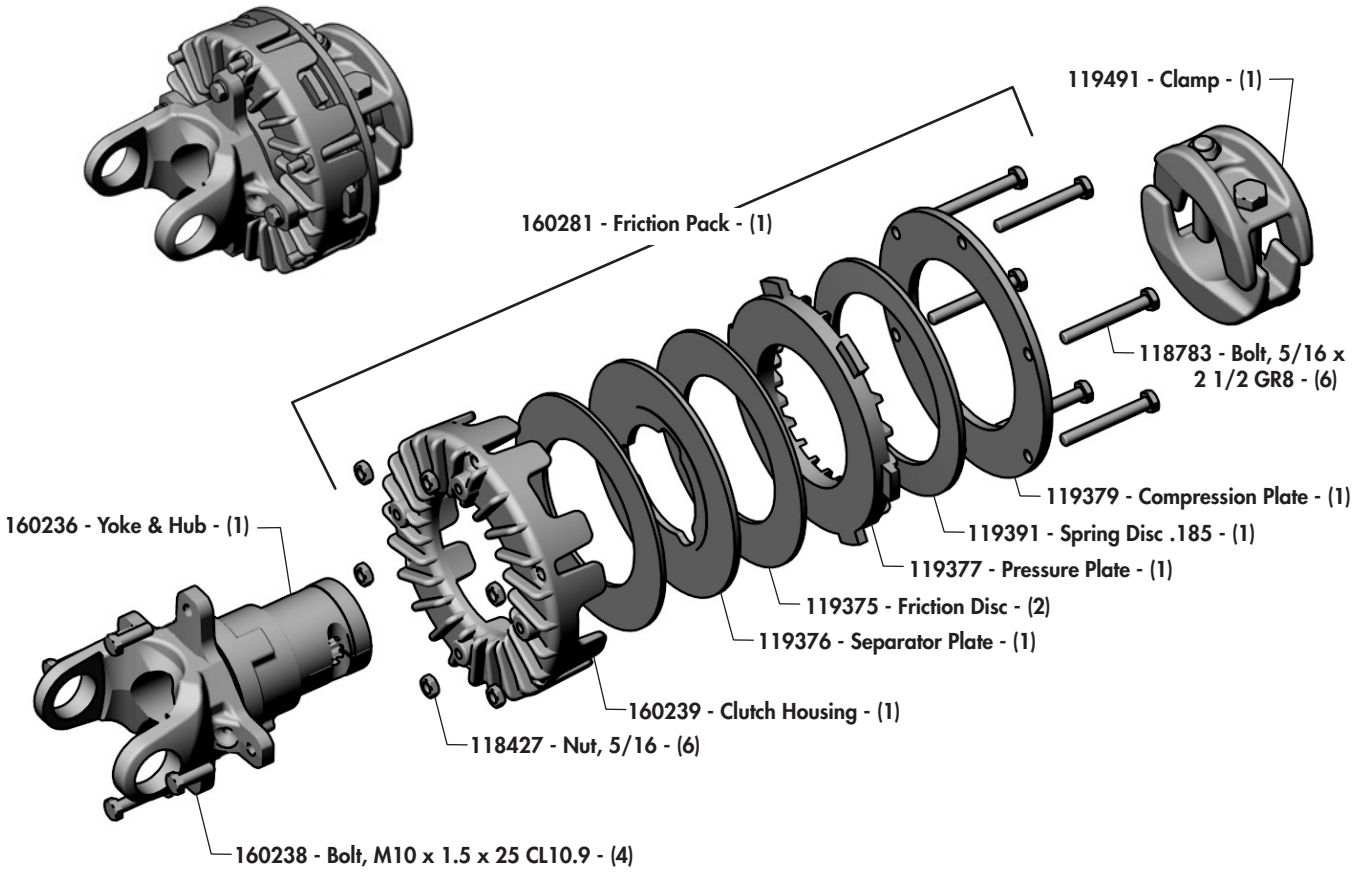

160248 - **540/1000 PTO Driveline - Center**
Double Center Universal Joint with Non-Adjusting Friction Clutch
160273 - **Center 540 PTO - 1300 NM** (12000 IN LBS)
Non-Adjusting Friction Clutch - Weasler

Weasler®

160248 - 540 PTO

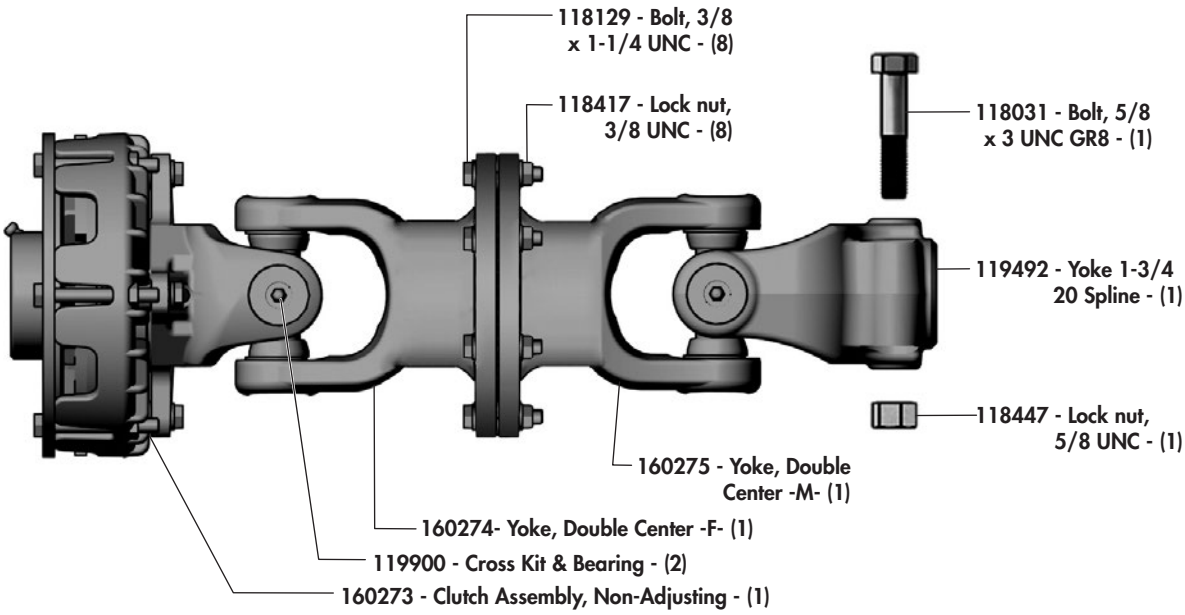

CENTER - 160273 - 540/1000 PTO

Weasler®

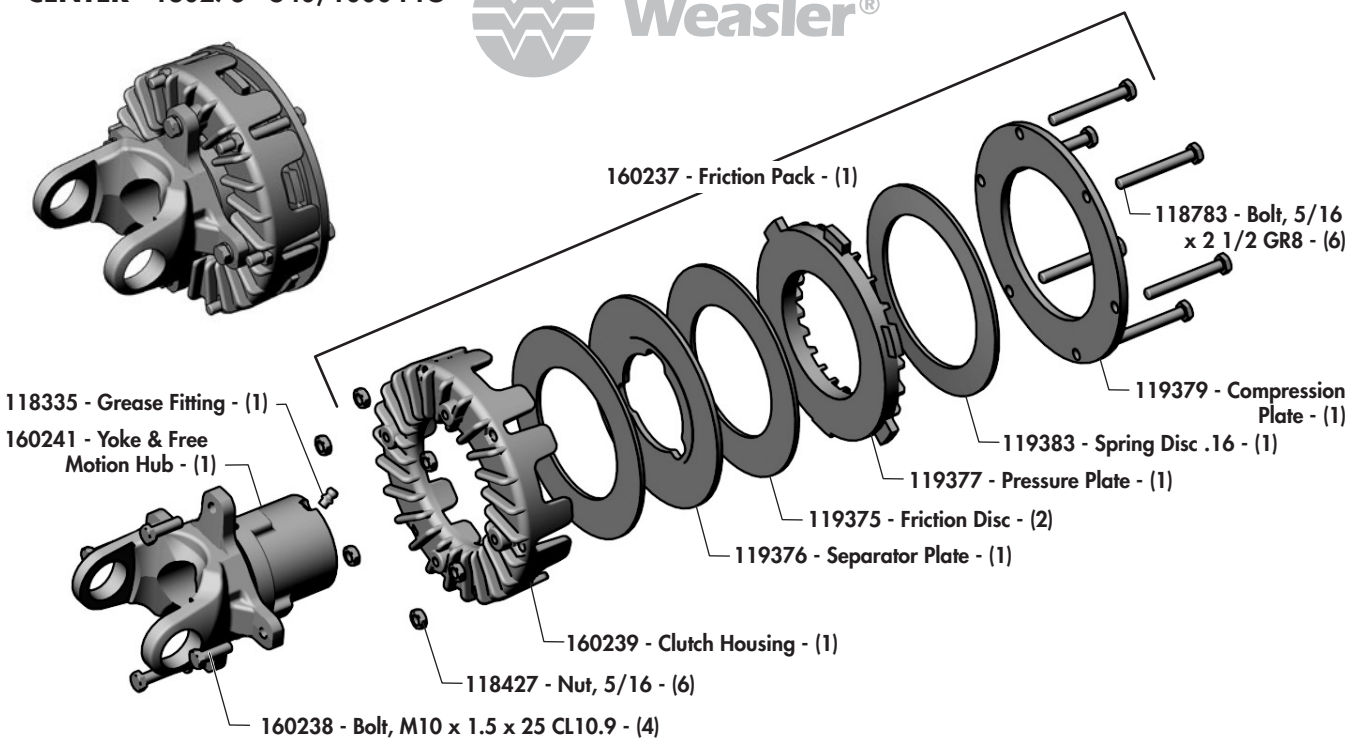

Gearbox Overview

Splitter Gearbox

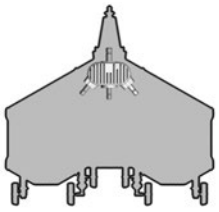

OMNI GEAR®

1000 RPM PTO
170201 - Gearbox (1.3:1)
(OMNI GEAR #250275)
pg.56

540 RPM PTO
170263 - Gearbox (1:1)
(OMNI GEAR #250171)
pg.56

Note: The direction of rotation on the outer output shafts **(B)** is opposite to the front input and middle output shafts **(A).**

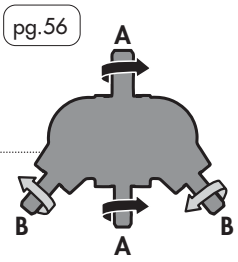

Left Wing Gearbox

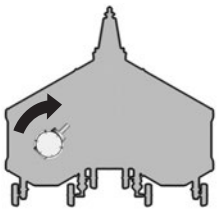

OMNI GEAR®

1000 RPM PTO
170255 - Gearbox (1:1.238)
(OMNI GEAR #251134)
pg.60

540 RPM PTO
170259 - Gearbox (1:1.833)
(OMNI GEAR #251136)
pg.59

Right Wing Gearbox

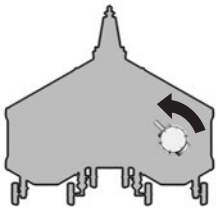

OMNI GEAR®

1000 RPM PTO
170257 - Gearbox (1:1.238)
(OMNI GEAR #251135)
pg.58

540 RPM PTO
170261 - Gearbox (1:1.833)
(OMNI GEAR #251137)
pg.57

Center Gearbox
With Traffic

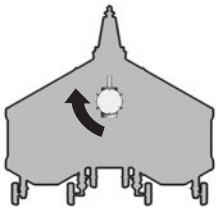

OMNI GEAR®

1000 RPM PTO
170253 - Gearbox (1:1)
(OMNI GEAR #251133)
pg.62

540 RPM PTO
170261 - Gearbox (1:1.833)
(OMNI GEAR #251137)
pg.61

Center Gearbox
Against Traffic

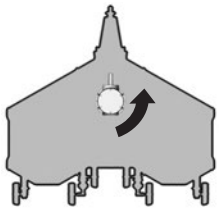

OMNI GEAR®

1000 RPM PTO
170251 - Gearbox (1:1)
(OMNI GEAR #251132)
pg.64

540 RPM PTO
170259 - Gearbox (1:1.833)
(OMNI GEAR #251136)
pg.63

OMNI GEAR®

170201 - 1000 RPM PTO Gearbox (1.3:1)
-OR-
170263 - 540 RPM PTO Gearbox (1:1)

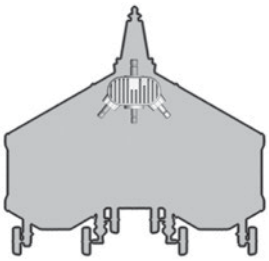

Part # - Description - **(Qty)**

1000 RPM PTO
170201 - Gearbox (1.3:1)
(OMNI GEAR #250275)

- OR -

540 RPM PTO
170263 - Gearbox (1:1)
(OMNI GEAR #250171)

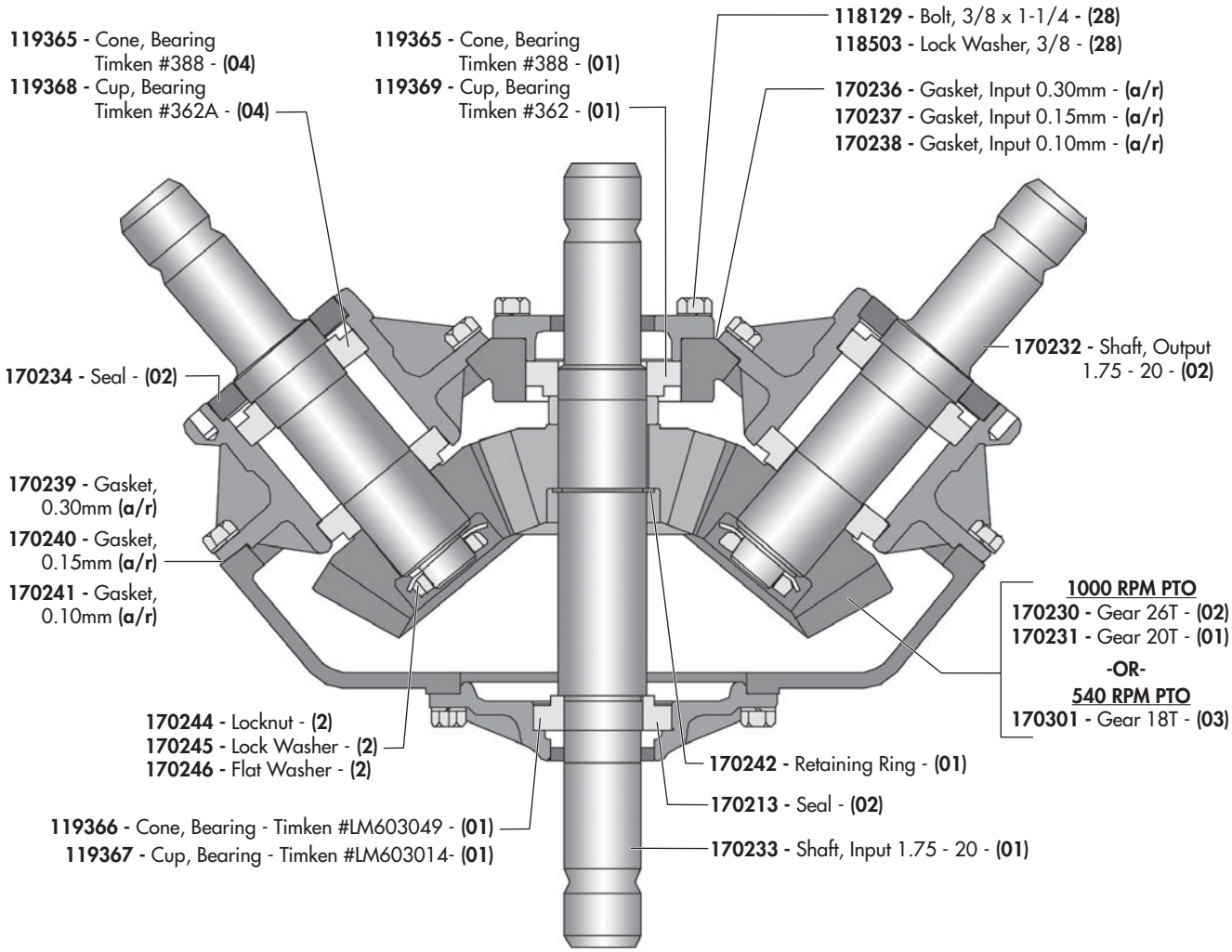

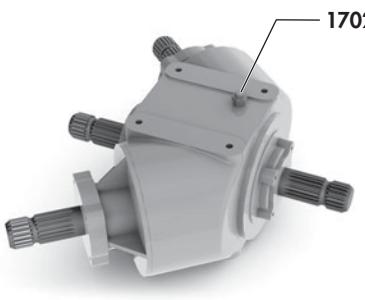



OMNI GEAR®

170261 - 540 RPM PTO Gearbox (1:1.833)

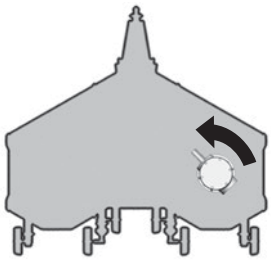

Part # - Description - **(Qty)**

540 RPM PTO
170261 - Gearbox (1:1.833)
(OMNI GEAR #251137)

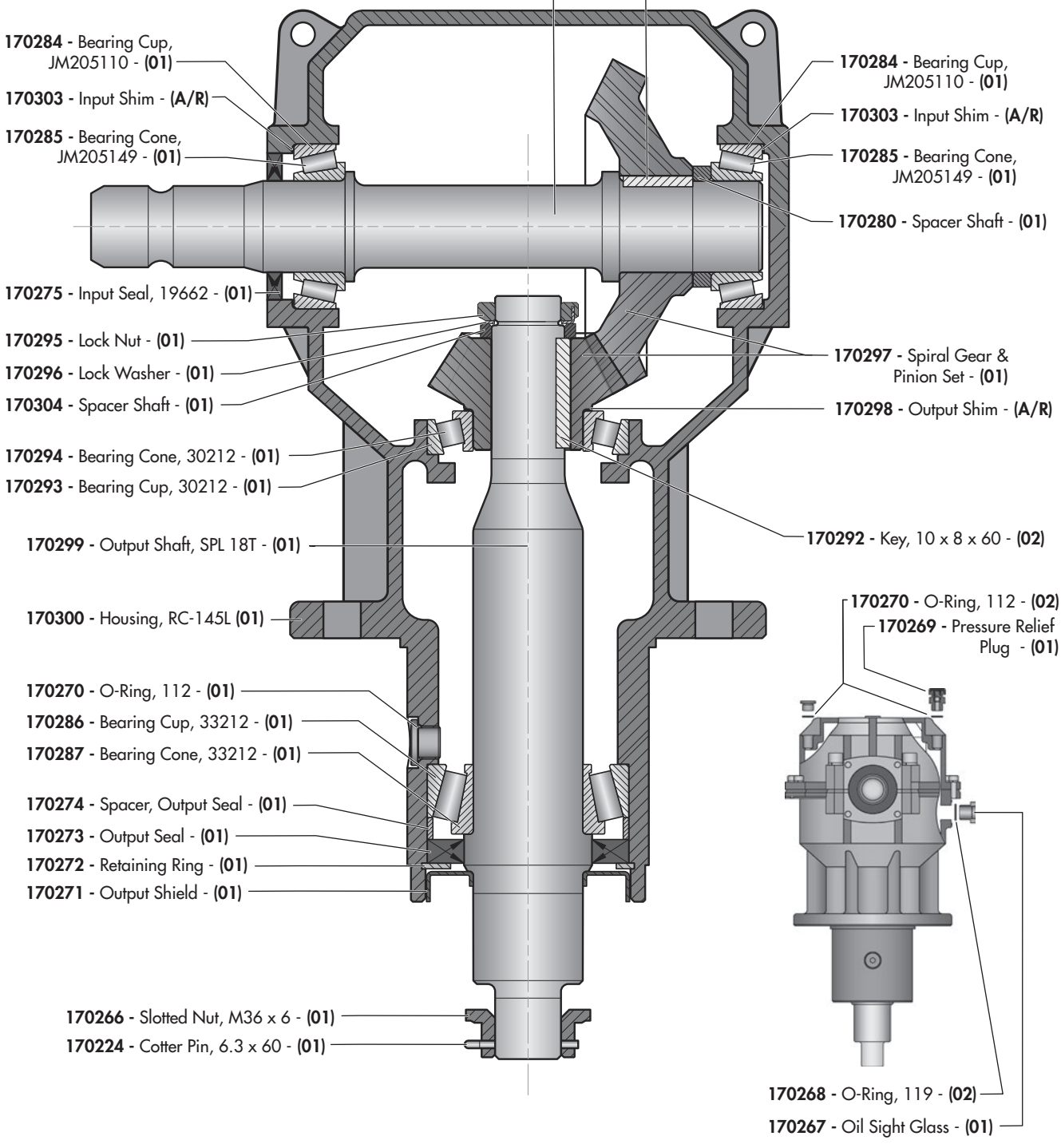

1000

OMNI GEAR®

170257 - 1000 RPM PTO Gearbox (1:1.238)

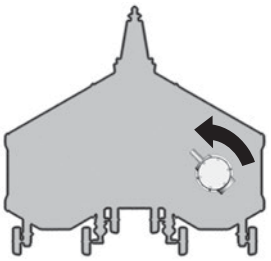

Part # - Description - **(Qty)**

1000 RPM PTO
170257 - Gearbox (1:1.238)
(OMNI GEAR #251135)

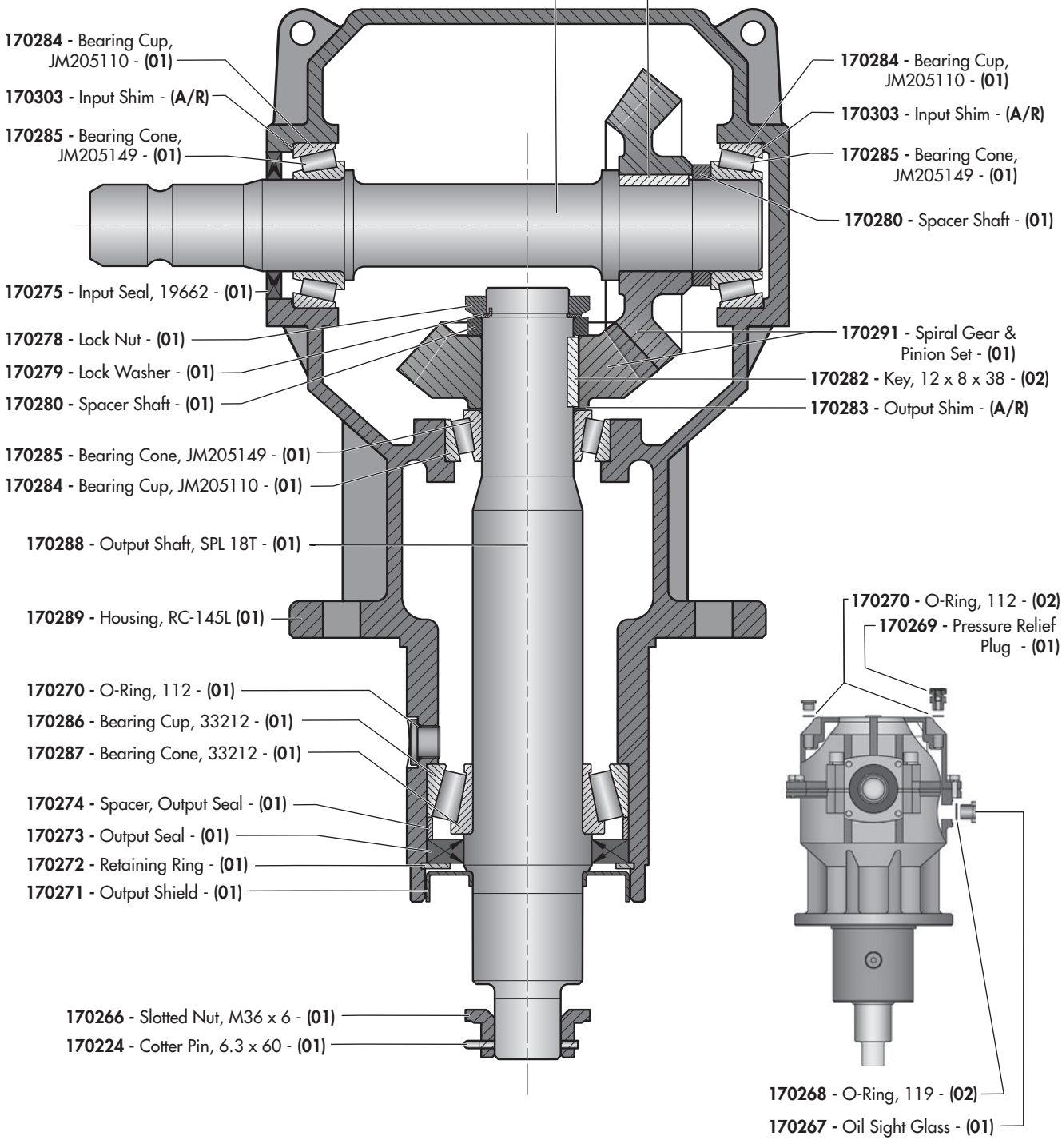

OMNI GEAR®

170259 - 540 RPM PTO Gearbox (1:1.833)

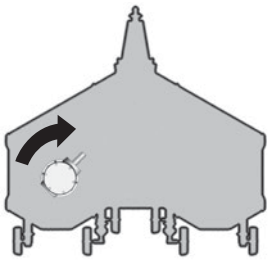

Part # - Description - **(Qty)**

540 RPM PTO
170259 - Gearbox (1:1.833)
(OMNI GEAR #251136)

170282 - Key, 12 x 8 x 38 - **(02)**

170277 - Input Shaft, 1.75-20 SPL - **(01)**

170284 - Bearing Cup, JM205110 - **(01)**

170303 - Input Shim - **(A/R)**

170285 - Bearing Cone, JM205149 - **(01)**

170284 - Bearing Cup, JM205110 - **(01)**

170303 - Input Shim - **(A/R)**

170285 - Bearing Cone, JM205149 - **(01)**

170275 - Input Seal, 19662 - **(01)**

170280 - Spacer Shaft - **(01)**

170297 - Spiral Gear & Pinion Set - **(01)**

170298 - Output Shim - **(A/R)**

170294 - Bearing Cone, 30212 - **(01)**

170293 - Bearing Cup, 30212 - **(01)**

170295 - Lock Nut - **(01)**

170296 - Lock Washer - **(01)**

170304 - Spacer Shaft - **(01)**

170292 - Key, 10 x 8 x 60 - **(02)**

170299 - Output Shaft, SPL 18T - **(01)**

170300 - Housing, RC-145L **(01)**

170270 - O-Ring, 112 - **(02)**

170269 - Pressure Relief Plug - **(01)**

170270 - O-Ring, 112 - **(01)**

170286 - Bearing Cup, 33212 - **(01)**

170287 - Bearing Cone, 33212 - **(01)**

170274 - Spacer, Output Seal - **(01)**

170273 - Output Seal - **(01)**

170272 - Retaining Ring - **(01)**

170271 - Output Shield - **(01)**

170266 - Slotted Nut, M36 x 6 - **(01)**

170224 - Cotter Pin, 6.3 x 60 - **(01)**

170268 - O-Ring, 119 - **(02)**

170267 - Oil Sight Glass - **(01)**

OMNI GEAR®

170255 - 1000 RPM PTO Gearbox (1:1.238)

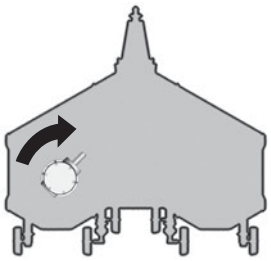

Part # - Description - **(Qty)**

1000 RPM PTO
170255 - Gearbox (1:1.238)
(OMNI GEAR #251134)

170282 - Key, 12 x 8 x 38 - **(02)**

170277 - Input Shaft, 1.75-20 SPL - **(01)**

170284 - Bearing Cup, JM205110 - **(01)**

170303 - Input Shim - **(A/R)**

170285 - Bearing Cone, JM205149 - **(01)**

170275 - Input Seal, 19662 - **(01)**

170280 - Spacer Shaft - **(01)**

170291 - Spiral Gear & Pinion Set - **(01)**

170283 - Output Shim - **(A/R)**

170285 - Bearing Cone, JM205149 - **(01)**

170284 - Bearing Cup, JM205110 - **(01)**

170288 - Output Shaft, SPL 18T - **(01)**

170289 - Housing, RC-145L **(01)**

170270 - O-Ring, 112 - **(01)**

170286 - Bearing Cup, 33212 - **(01)**

170287 - Bearing Cone, 33212 - **(01)**

170274 - Spacer, Output Seal - **(01)**

170273 - Output Seal - **(01)**

170272 - Retaining Ring - **(01)**

170271 - Output Shield - **(01)**

170266 - Slotted Nut, M36 x 6 - **(01)**

170224 - Cotter Pin, 6.3 x 60 - **(01)**

170284 - Bearing Cup, JM205110 - **(01)**

170303 - Input Shim - **(A/R)**

170285 - Bearing Cone, JM205149 - **(01)**

170278 - Lock Nut - **(01)**

170279 - Lock Washer - **(01)**

170280 - Spacer Shaft - **(01)**

170282 - Key, 12 x 8 x 38 - **(02)**

170270 - O-Ring, 112 - **(02)**

170269 - Pressure Relief Plug - **(01)**

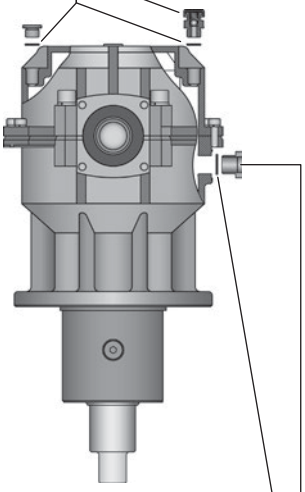

170268 - O-Ring, 119 - **(02)**

170267 - Oil Sight Glass - **(01)**

OMNI GEAR®

170261 - 540 RPM PTO Gearbox (1:1.833) With Traffic

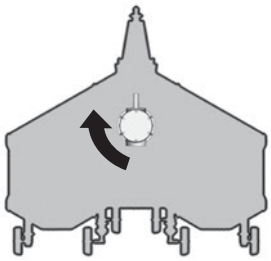

Part # - Description - **(Qty)**

540 RPM PTO
170261 - Gearbox (1:1.833)
(OMNI GEAR #251137)

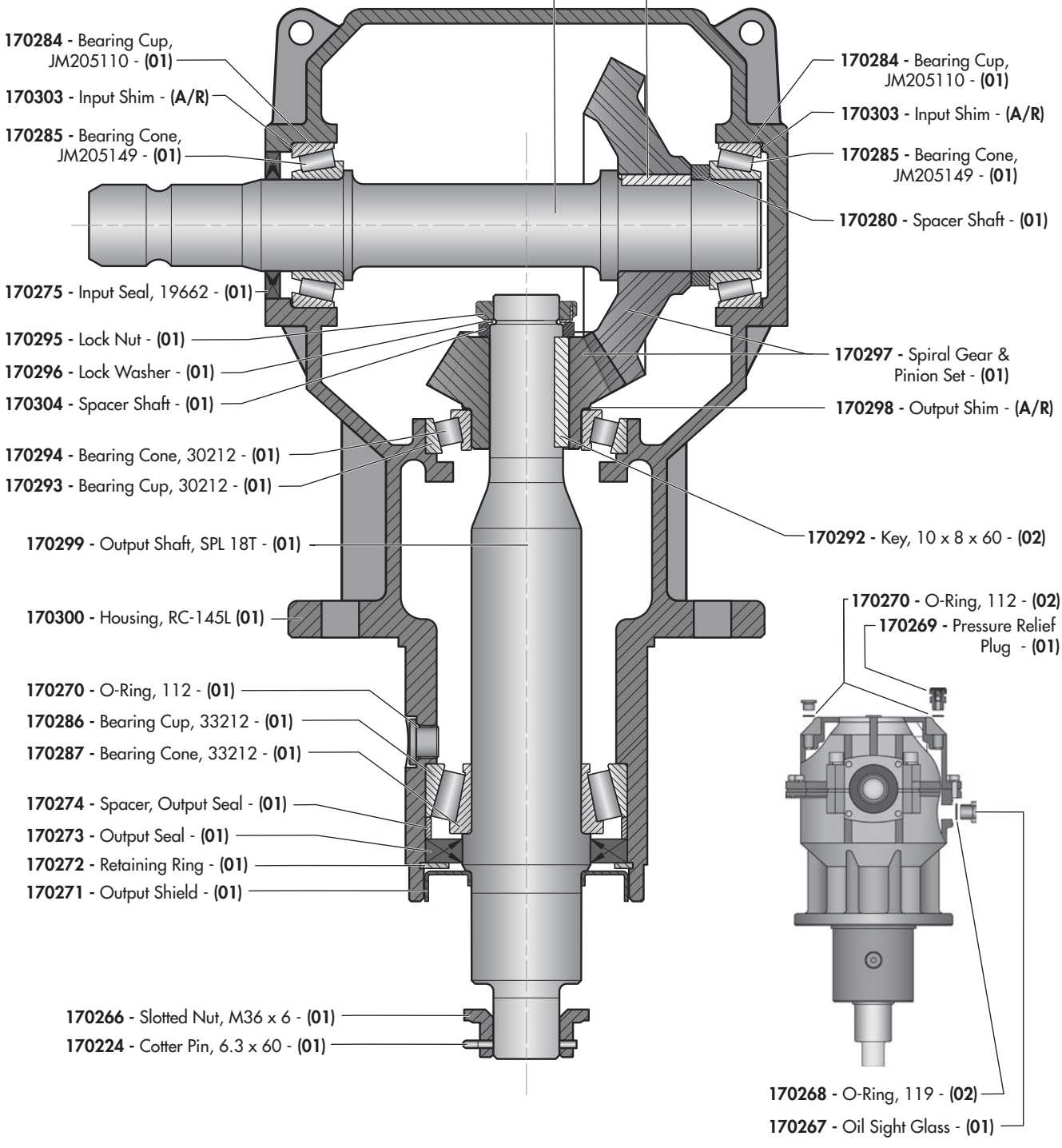

OMNI GEAR®

170253 - 1000 RPM PTO Gearbox (1:1) With Traffic

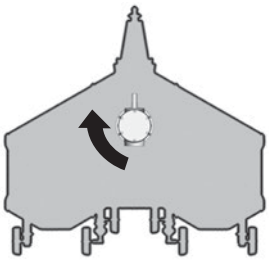

Part # - Description - **(Qty)**

1000 RPM PTO
170253 - Gearbox (1:1)
(OMNI GEAR #251133)

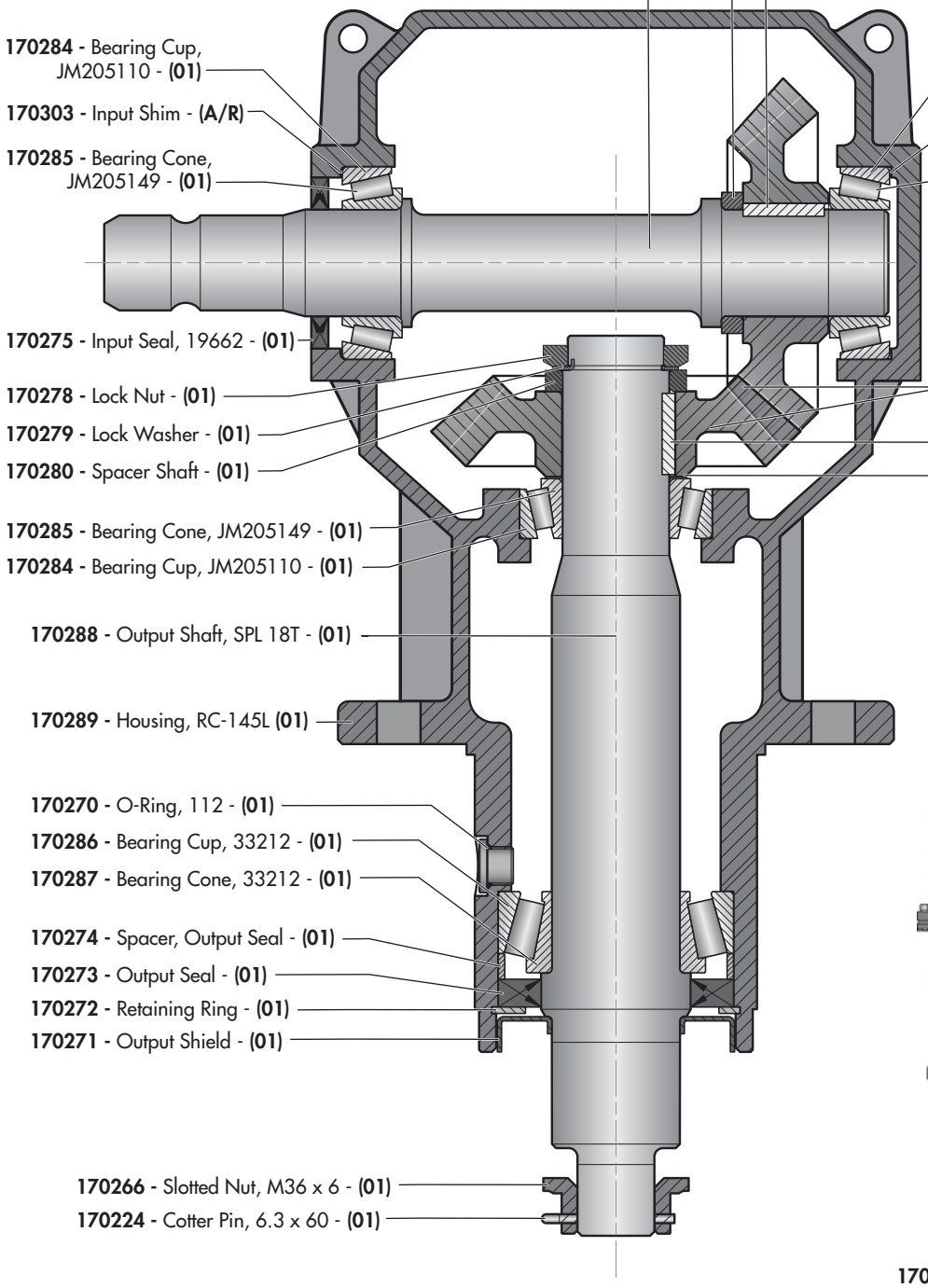

170290 - Input Shaft, 1.75-20 SPL - **(01)**
170280 - Spacer Shaft - **(01)**
170282 - Key, 12 x 8 x 38 - **(02)**
170284 - Bearing Cup, JM205110 - **(01)**
170303 - Input Shim - **(A/R)**
170285 - Bearing Cone, JM205149 - **(01)**
170275 - Input Seal, 19662 - **(01)**
170278 - Lock Nut - **(01)**
170279 - Lock Washer - **(01)**
170280 - Spacer Shaft - **(01)**
170285 - Bearing Cone, JM205149 - **(01)**
170284 - Bearing Cup, JM205110 - **(01)**
170288 - Output Shaft, SPL 18T - **(01)**
170289 - Housing, RC-145L **(01)**
170270 - O-Ring, 112 - **(01)**
170286 - Bearing Cup, 33212 - **(01)**
170287 - Bearing Cone, 33212 - **(01)**
170274 - Spacer, Output Seal - **(01)**
170273 - Output Seal - **(01)**
170272 - Retaining Ring - **(01)**
170271 - Output Shield - **(01)**
170266 - Slotted Nut, M36 x 6 - **(01)**
170224 - Cotter Pin, 6.3 x 60 - **(01)**
170284 - Bearing Cup, JM205110 - **(01)**
170303 - Input Shim - **(A/R)**
170285 - Bearing Cone, JM205149 - **(01)**
170281 - Spiral Gear & Pinion Set - **(01)**
170282 - Key, 12 x 8 x 38 - **(02)**
170283 - Output Shim - **(A/R)**
170270 - O-Ring, 112 - **(02)**
170269 - Pressure Relief Plug - **(01)**
170268 - O-Ring, 119 - **(02)**
170267 - Oil Sight Glass - **(01)**



OMNI GEAR®

170259 - 540 RPM PTO Gearbox (1:1.833) Against Traffic

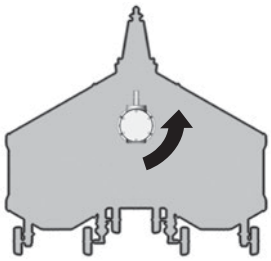

Part # - Description - **(Qty)**

540 RPM PTO
170259 - Gearbox (1:1.833)
(OMNI GEAR #251136)

170282 - Key, 12 x 8 x 38 - **(02)**
170277 - Input Shaft, 1.75-20 SPL - **(01)**
170284 - Bearing Cup, JM205110 - **(01)**
170303 - Input Shim - **(A/R)**
170285 - Bearing Cone, JM205149 - **(01)**
170284 - Bearing Cup, JM205110 - **(01)**
170303 - Input Shim - **(A/R)**
170285 - Bearing Cone, JM205149 - **(01)**
170275 - Input Seal, 19662 - **(01)**
170280 - Spacer Shaft - **(01)**
170297 - Spiral Gear & Pinion Set - **(01)**
170298 - Output Shim - **(A/R)**
170294 - Bearing Cone, 30212 - **(01)**
170293 - Bearing Cup, 30212 - **(01)**
170295 - Lock Nut - **(01)**
170296 - Lock Washer - **(01)**
170304 - Spacer Shaft - **(01)**
170292 - Key, 10 x 8 x 60 - **(02)**
170299 - Output Shaft, SPL 18T - **(01)**
170300 - Housing, RC-145L **(01)**
170270 - O-Ring, 112 - **(02)**
170269 - Pressure Relief Plug - **(01)**
170270 - O-Ring, 112 - **(01)**
170286 - Bearing Cup, 33212 - **(01)**
170287 - Bearing Cone, 33212 - **(01)**
170274 - Spacer, Output Seal - **(01)**
170273 - Output Seal - **(01)**
170272 - Retaining Ring - **(01)**
170271 - Output Shield - **(01)**
170266 - Slotted Nut, M36 x 6 - **(01)**
170224 - Cotter Pin, 6.3 x 60 - **(01)**
170268 - O-Ring, 119 - **(02)**
170267 - Oil Sight Glass - **(01)**

OMNI GEAR®

170251 - 1000 RPM PTO Gearbox
(1:1) Against Traffic

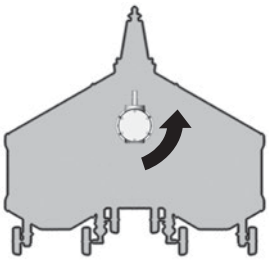

Part # - Description - **(Qty)**

1000 RPM PTO
170251 - Gearbox (1:1)
(OMNI GEAR #251132)

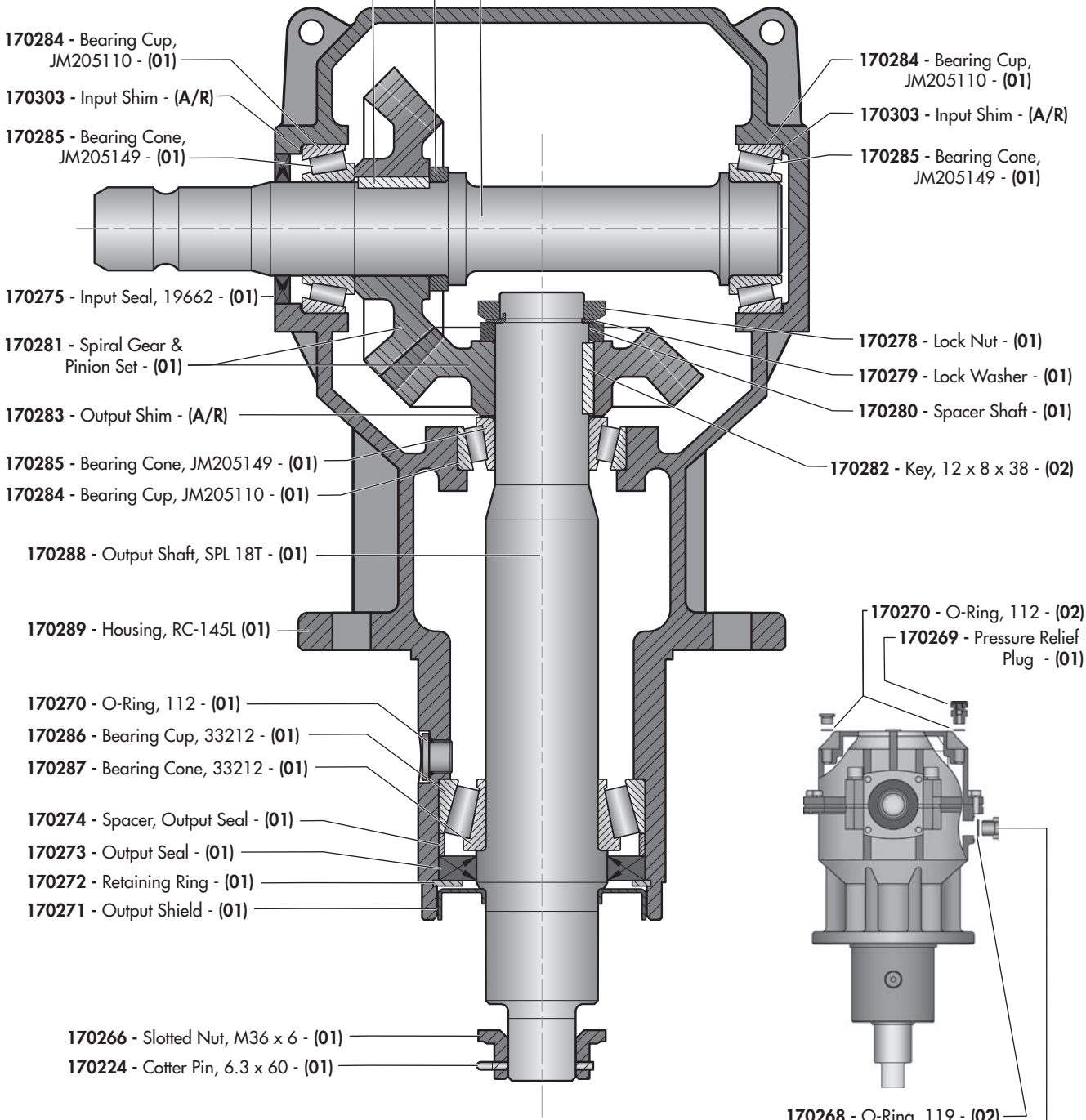

Options - Toolbox & Guide Wheels

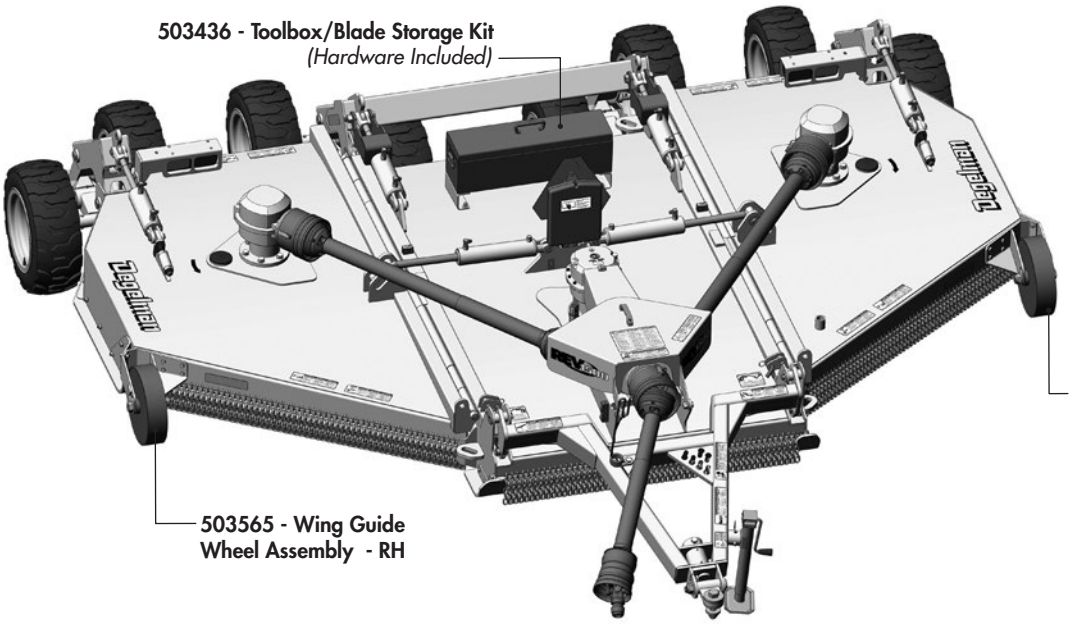

503436 - Toolbox/Blade Storage Kit
(Hardware Included)

133103 - Toolbox (1)

118009 - Bolt, 1/2 x 1-1/4 (8)

118512 - Flat Washer, 1/2 F436 (8)

503441 - Toolbox Bracket, LH (1)

503442 - Toolbox Bracket, RH (1)

118729 - Lock Nut, 1/2 UNC GRC - Unitorque (8)

503565 - Guide Wheel Assembly - RH
(503566 - Guide Wheel Assembly - LH)

503484 - Guide Wheel Bracket Inner - RH
(503485 - Guide Wheel Bracket Inner - LH)

503482 - Guide Wheel Bracket Outer - RH
(503483 - Guide Wheel Bracket Outer - LH)

118729 - Lock Nut, 1/2 UNC GRC - Unitorque (3)

118512 - Flat Washer, 1/2 F436 (6)

118011 - Bolt, 1/2 x 1-1/2 (3)

118504 - Lock Washer, 1/2 (4)

118011 - Bolt, 1/2 x 1-1/2 (4)

131206 - Washer, Flat 1-1/4 SAE (3)

118962 - Lock Nut, 1-1/4 UNF GR8 (1)

501629 - Spacer Bushing, 1-3/4" OD (2)

131531 - Retaining Ring, 2-7/16" (2)

131530 - Dust Seal - 1.75" ID (2)

131529 - Tapered Bearing, Cone (2)

131528 - Tapered Bearing, Race (2)

118218 - Carriage Bolt, 1/2 x 1-1/2 (2)

118512 - Flat Washer, 1/2 F436 (2)

118729 - Lock Nut, 1/2 UNC GRC - Unitorque (2)

500330 - Bolt, 1-1/4 x 7-1/2 UNF (1)
(c/w Grease Fitting)

501625 - Steel Wheel Assembly (1)
(c/w Bearings)

Light Components

REV 1500 - Typical Light Wire Routing

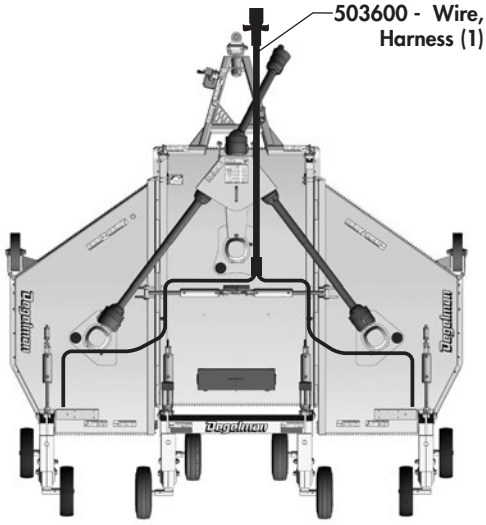

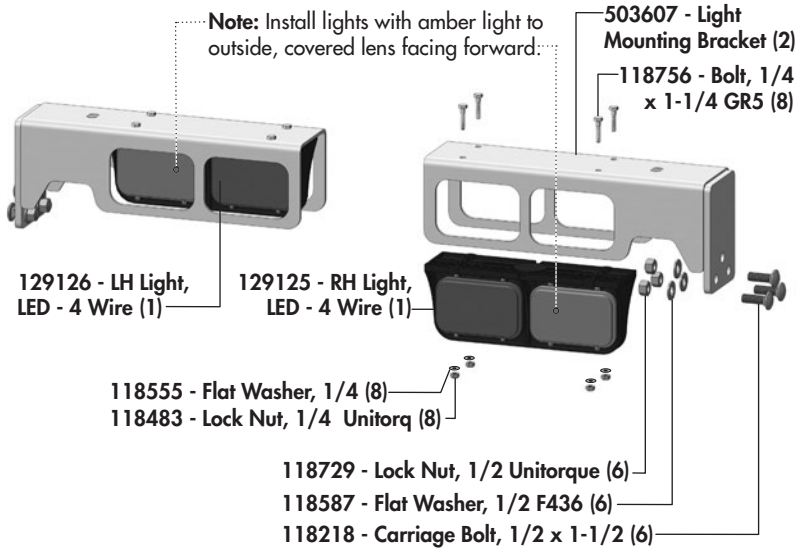

REV 1000 - Typical Light Wire Routing - RH WING

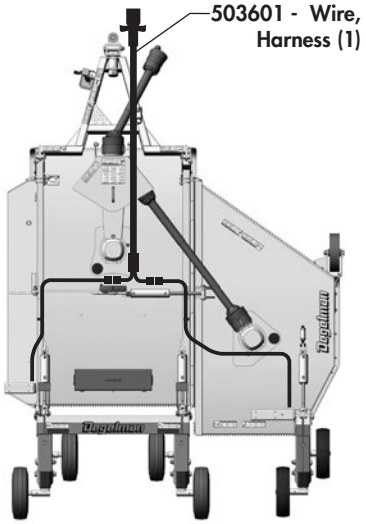

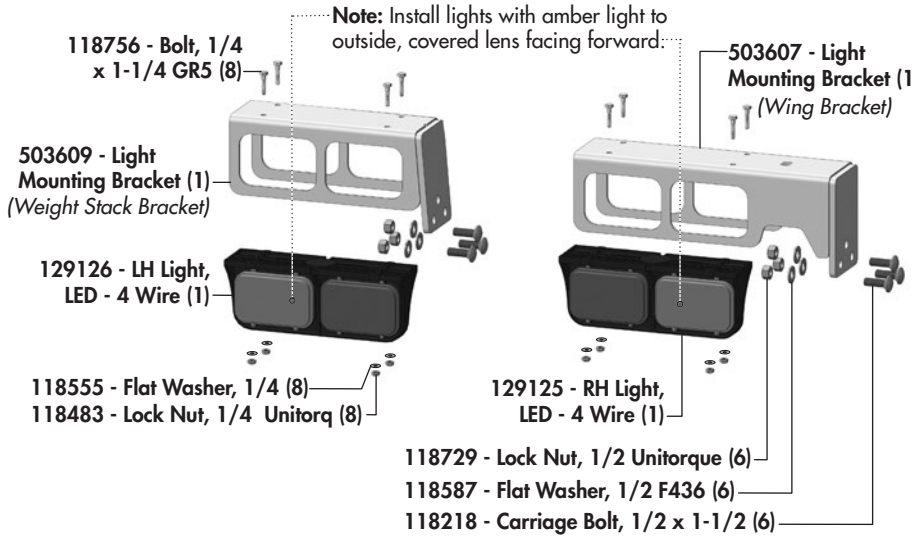

REV 1000 - Typical Light Wire Routing - LH WING

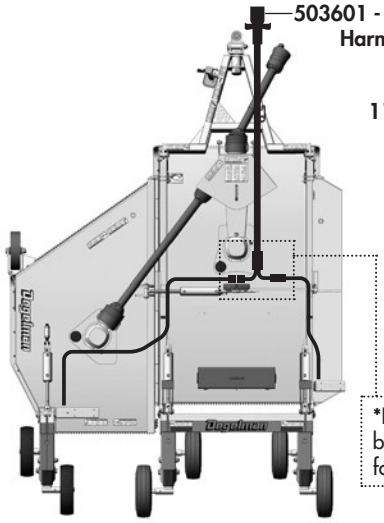

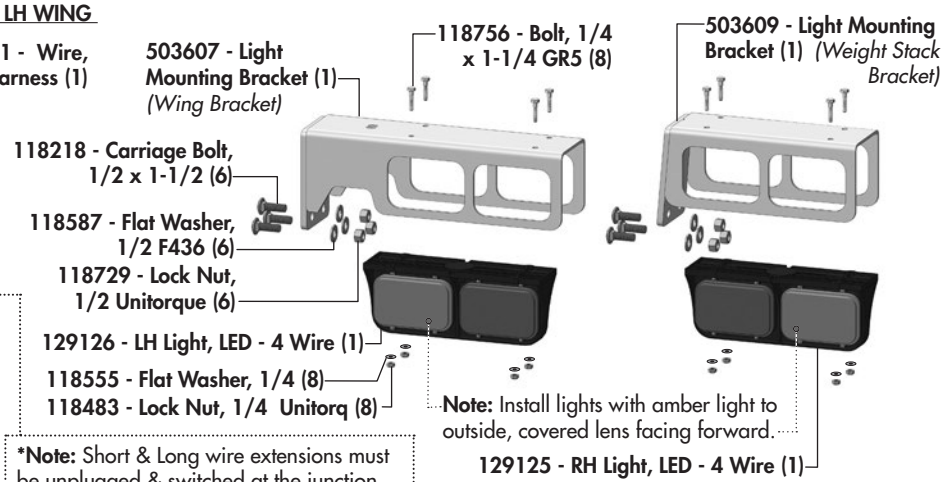

***Note:** Short & Long wire extensions must be unplugged & switched at the junction for proper routing (LH wing configuration).

Warranty

2 Year
Limited Warranty

Degelman Industries LP ("Degelman") warrants to the original purchaser of a new REV 1500 Degelman Rotary Cutter, purchased from an authorized Degelman dealer, that the equipment will be free from defects in material and workmanship for a period of two (2) years from the date of delivery, for non-commercial use (including farm, institutional, government, and municipality) and (1) year from the date of delivery for commercial use. The obligation of Degelman to the purchaser under this warranty is limited to the repair or replacement of defective parts in the first year and to the provision, but not the installation of replacement parts in the second year. Degelman reserves the right to inspect any equipment or parts which are claimed to have been defective in material or workmanship.

Replacement or repair parts installed in the equipment covered by this limited warranty are warranted for ninety (90) days from the date of delivery of such part or the expiration of the applicable new equipment warranty period, which ever occurs later. Warranted parts shall be provided at no cost to the user at an authorized Degelman dealer during regular working hours. Warranted replacement parts will either be replaced or rebuilt at Degelman's discretion.

Disclaimer of implied warranties & consequential damages

This warranty shall not be interpreted to render Degelman Industries LP liable for injury, death, property damage or damages of any kind, whether direct, consequential, or contingent to property. Without limiting the generality of the foregoing, Degelman shall not be liable for damages resulting from any cause beyond its reasonable control, including, without limitation, loss of crops, any expense or loss of labour, supplies, rental machinery or loss of use.

No other warranty of any kind whatsoever, express or implied is made with respect to this sale; and all implied warranties of merchantability and fitness for a particular purpose which exceed the obligations set forth in this written warranty are hereby disclaimed and excluded from this sale. This exclusion shall not apply in any jurisdiction where it is not permitted by law.

This limited warranty shall not apply:

1. If, in the sole opinion of Degelman, the unit has been subjected to misapplication, abuse, misuse, negligence or accident.
2. To any goods that have sustained damage or deterioration attributable to contact with foreign objects (eg. stones, iron, and other material other than grass and brush.)
3. If parts not made or supplied by Degelman have been used in the connection with the unit, if, in the sole judgement of Degelman such use affects its performance, safety, stability or reliability.
4. If the unit has been altered or repaired outside of an authorized Degelman dealership in a manner which, in the sole judgement of Degelman, affects its performance, safety, stability or reliability.
5. To normal maintenance service and normal replacement items such as gearbox lubricant, hydraulic fluids, and seals.
6. To expendable or wear items such as blades, blade bolts, skid pans, skid shoes and any other items that in the company's sole judgement is a wear item.

No employee or representative of Degelman Industries LP is authorized to change this limited warranty in any way or grant any other warranty unless such change is made in writing and signed by the Degelman Service Manager.

This limited warranty is subject to any future availability of supply, which may directly affect Degelman's ability to obtain materials or manufacture replacement parts.

Degelman reserves the right to make improvements in design or changes in specifications at any time, without incurring obligations to owners of equipment previously delivered.

This limited warranty is subject to compliance by the customer to the enclosed *Retail Customer's Responsibility Under Degelman Warranty.*

Make certain the warranty registration card has been forwarded to:

Degelman Industries LP
Box 830
272 Industrial Dr.
Regina, SK, Canada
S4P 3B1

© 2026 Degelman Industries LP