Degelman

OPERATOR & PARTS MANUAL

HY-ROLLER



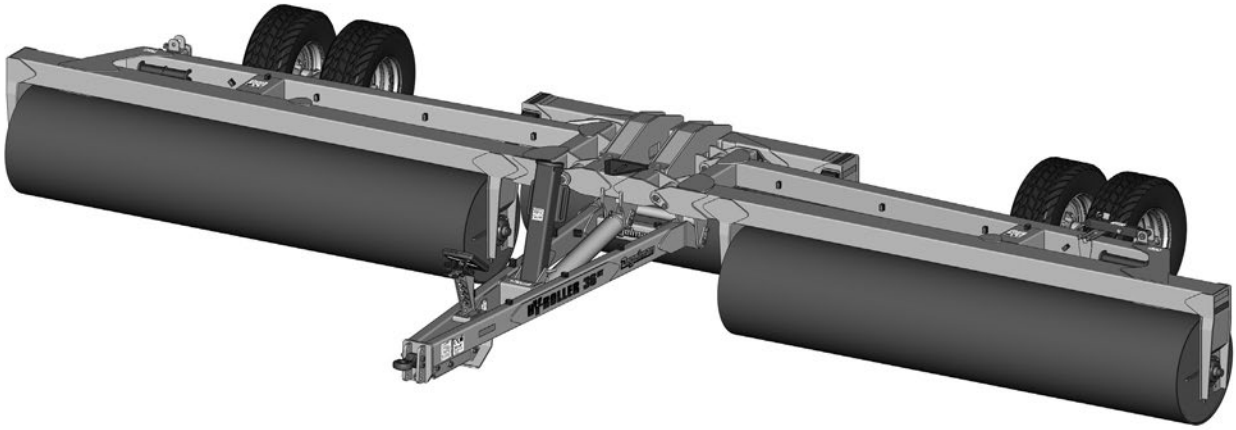

HY-ROLLER | 31NT | 36NT | 41NT

HY-ROLLER XL | 31NT | 36NT | 41NT

143608 v1.1

DEGELMAN INDUSTRIES LP
BOX 830-272 INDUSTRIAL DRIVE,
REGINA, SK, CANADA, S4P 3B1
FAX 306.543.2140 PH 306.543.4447
1.800.667.3545 DEGELMAN.COM

HY-ROLLER | HY-ROLLER XL
31|36|41 NT

QUICK-START GUIDE*
for **HY-ROLLER**

* Refer to operators manual for complete safety and operation info.

REMEMBER! You must complete Product Registration to be eligible for Warranty.

Degelman

A Connect Hydraulics

❶ **TRANSPORT / FLOAT**.....Transport Cylinder
❷ **LEFT HAND WHEEL** .....LH Endwheel Cylinder
❸ **RIGHT HAND WHEEL** .....RH Endwheel Cylinder
❹ **HYDRAULIC JACK** .....Hydraulic Jack Cylinder

B Backing Into Field Position

1) Drive landroller onto level ground, straight behind the tractor.

• Ensure there is plenty of room behind and to the sides of the landroller for backing into field position.

2) • Remove all **3** red cylinder transport bars. *(1 on front transport cylinder and 2 located on rear endwheel cylinders).*

• Place the transport bars into the storage positions shown and secure with lock-pins.

Note: You may need to activate (slightly extend) the hydraulic cylinders to allow removal of the cylinder transport bars.

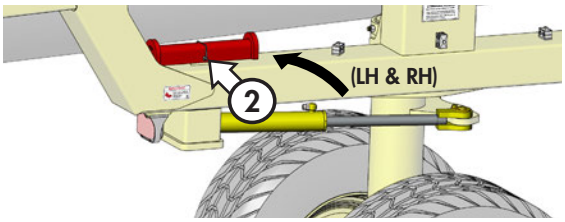

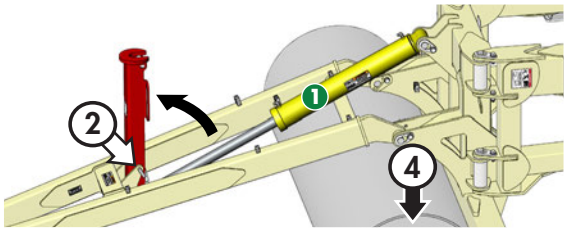

NOTE: If engaged, un-pin the "Back-Up Bar" and secure it into the storage position.

3) Activate the End Wheel Circuits ❷ & ❸ to turn each Endwheel to around 20° max. Try to match the angles on each wheel.

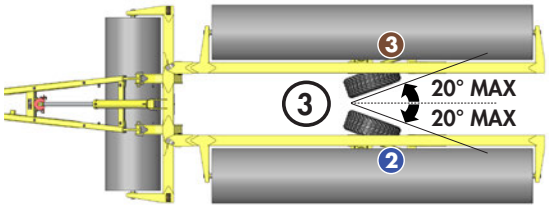

4) Retract the transport cylinder ❶ to lower the center drum until the weight of the drum is on the ground.

5) Slowly back-up the landroller until wings are slightly spread.

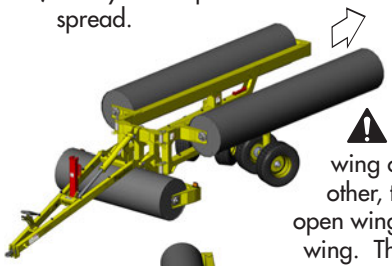

IMPORTANT: If one wing opens sooner than the other, turn the wheels on the open wing perpendicular to the wing. This will prevent strain/ damage to the machine while opening the other wing.



6) Turn the wheels ❷ & ❸ while backing up. Avoid pushing on the sidewalls of the tires.

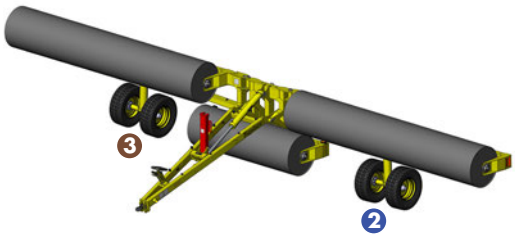

7) Backup until the wings are straight in line with the center frame. Ensure wheels are straight before Step 8.

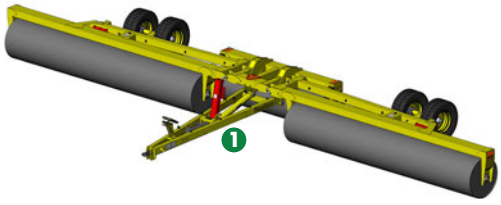

8) Activate the transport cylinder ❶ to retract the cylinder. Retract until all the roller drums are on the ground. Once all drums are on ground, set transport circuit to "float" position.

IMPORTANT: Set the tractor hydraulic remote that activates the transport cylinder into "float" position. This will allow the hitch pole to contour more effectively and prevent strain or possible damage to the machine.

C Moving Into Transport Position

1) Drive roller on level ground. Fully extend transport cylinder ❶.

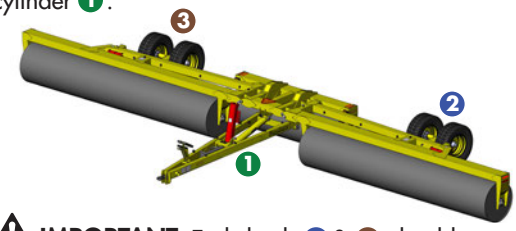

⚠ **IMPORTANT:** Endwheels ❷ & ❸ should be perpendicular to the beam. This will allow the wheel to naturally roll under the machine.

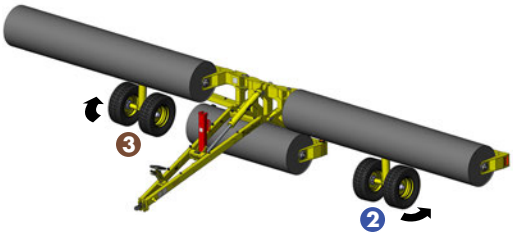

2) Slowly extend LH Endwheel cylinder ❷ until the wheel is completely turned.

⚠ **IMPORTANT:** Turn only one wheel at a time to help anchor the machine while the other wheel turns.

3) Slowly extend RH Endwheel cylinder ❸ until the wheel is completely turned.

4) Drive forward until the roller trails behind.

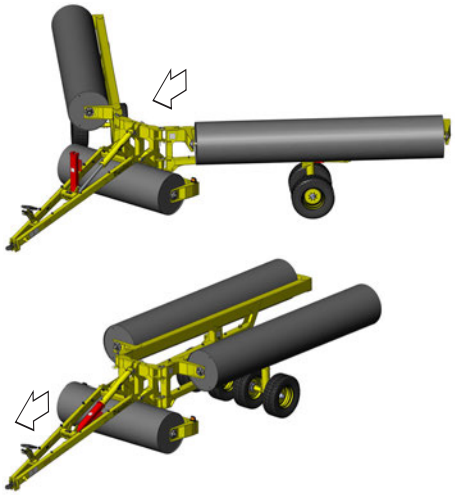

5) Install the cylinder transport bars onto both LH & RH endwheel cylinder shafts and secure.

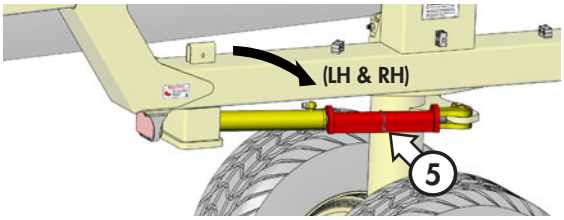

6) Install the transport cylinder transport bar and secure in place. It is advised to put weight on the transport cylinder lock after locking the cylinder.

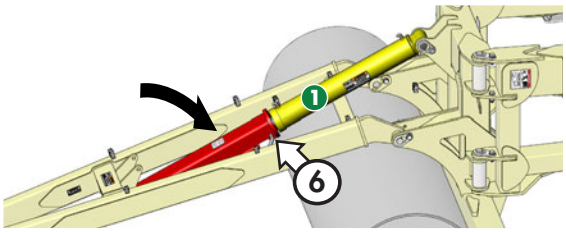

7) Read and follow necessary safety procedures outlined in "Transport Safety" section of the manual.

NOTE: The "Back-Up Bar" may be installed to keep the wings from separating when backing-up the roller into a desired location for storage or parking.

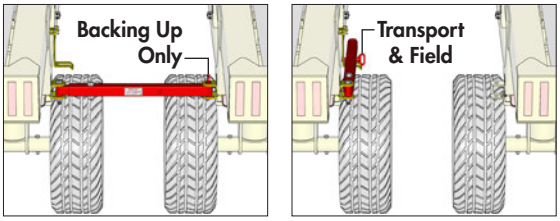

⚠ **IMPORTANT:** The "Back-Up Bar" is only intended to be used to aid in maneuvering when backing-up the roller. It is not recommended to use the "Back-Up Bar" while transporting.

Maintenance
(Check Machine Daily)

- Check for missing, worn or damaged parts.
- Check working points & pins.
- Check hydraulic connections & hoses.
- Check Hubs & Spindles.
- Check Tire Pressure. **65 PSI (448 kPa)**
- Grease Endwheel Turrets. **(25 hrs)**
- Grease Hitch. **(40 hrs)**

* **Refer to operators manual for complete safety and operation info.**

© 2025 Degelman Industries LP

Degelman

HY-ROLLER

**** Reference Sheet Quick-Start Guide***

OPERATORS SECTION - TABLE OF CONTENTS

Introduction	***1***
Safety	***2***
Operation	***4***
Transport to Field Position	*7*
Field to Transport Position	*8*
Service & Maintenance	***9***
Service / Maintenance Checklist	*11*
Repair - Wheel Hub	*12*
Repair - Hydraulic Cylinder	*13*
Repair - Pressed Bushing	*14*
Troubleshooting	***15***

PARTS SECTION **- TABLE OF CONTENTS**

Hitch Frame Components	*18*
Center Frame Components	*20*
Wing Frame Components	*21*
Back-Up Bar Components	*22*
Wheel & Pivot Components	*23*
Hydraulic & Electrical Routing	*24*
Warranty	***28***

DEGELMAN INDUSTRIES LP
BOX 830-272 INDUSTRIAL DRIVE,
REGINA, SK, CANADA, S4P 3B1
FAX 306.543.2140 PH 306.543.4447
1.800.667.3545 DEGELMAN.COM

⚠ IMPORTANT:



READ MANUAL

Introduction

CONGRATULATIONS on your choice of a Degelman HY-Roller to complement your farming operation. It has been designed and manufactured to meet the needs of a discerning agricultural market for increasing yields for high quality pulse crops and preparing the perfect bed for haying, grasses and silage. Degelman rollers provide a smooth and level surface for faster, easier harvest operations and better seed-to-soil contact. Use this manual as your first source of information about this machine.

TO THE NEW OPERATOR OR OWNER - Safe, efficient and trouble free operation of your Degelman HY-Roller requires that you and anyone else who will be operating or maintaining it, read and understand the Safety, Operation, Maintenance and Troubleshooting information contained within this manual.

By following the operating instructions in conjunction with a good maintenance program your machine will provide many years of trouble-free service. Keep this manual handy for frequent reference and to pass on to new operators or owners. Call your Degelman Dealer if you need assistance, information, or additional copies of the manual.

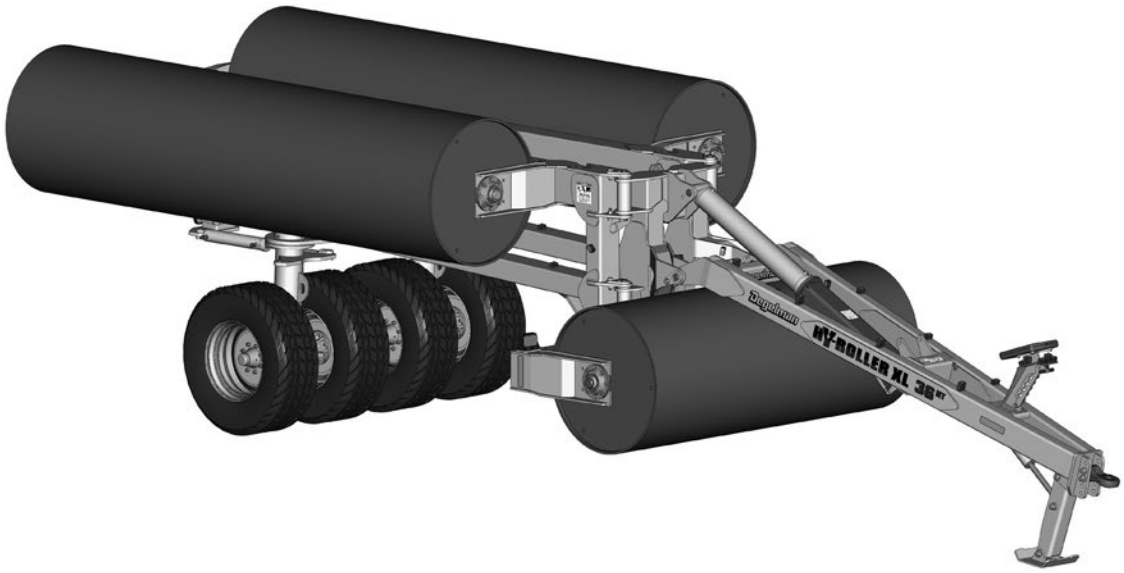

OPERATOR ORIENTATION - The directions left, right, front and rear, as mentioned throughout the manual, are as seen from the tractor drivers' seat and facing in the direction of travel.

Why is SAFETY important to YOU?

3 BIG Reasons:

- **Accidents Can Disable and Kill**
- **Accidents Are Costly**
- **Accidents Can Be Avoided**



SAFETY ALERT SYMBOL

The **Safety Alert Symbol** identifies important safety messages applied to the HY-Roller and in this manual. When you see this symbol, be alert to the possibility of **injury or death**. Follow the instructions provided on the safety messages.

The **Safety Alert Symbol** means:

ATTENTION!
BECOME ALERT!
YOUR SAFETY IS INVOLVED!

SIGNAL WORDS

Note the use of the Signal Words: **DANGER**, **WARNING**, and **CAUTION** with the safety messages. The appropriate Signal Word has been selected using the following guidelines:

DANGER

DANGER: Indicates an imminently hazardous situation that, if not avoided, **WILL** result in death or serious injury if proper precautions are not taken.

WARNING

WARNING: Indicates a potentially hazardous situation that, if not avoided, **COULD** result in death or serious injury if proper precautions are not taken.

CAUTION

CAUTION: Indicates a potentially hazardous situation that, if not avoided, **MAY** result in minor or moderate injury if proper practices are not taken, or, serves as a reminder to follow appropriate safety practices.

SAFETY

YOU are responsible for the safe operation and maintenance of your Degelman HY-Roller.

YOU must ensure that you and anyone else who is going to operate, maintain or work around the HY-Roller be familiar with the operating and maintenance procedures and related **SAFETY** information contained in this manual.
This manual will take you step-by-step through your working day and alerts you to all good safety practices that should be adhered to while operating this equipment.

Remember, **YOU** are the key to safety. Good safety practices not only protect you but also the people around you. Make these practices a working part of your safety program. Be certain that **EVERYONE** operating this equipment is familiar with the recommended operating and maintenance procedures and follows all the safety precautions. Most accidents can be prevented. Do not risk injury or death by ignoring good safety practices.

- Equipment owners must give operating instructions to operators or employees before allowing them to operate the HY-Roller, and at least annually thereafter per OSHA regulation 1928.51.
- The most important safety device on this equipment is a **SAFE** operator. It is the operator's responsibility to read and understand ALL Safety and Operating instructions in the manual and to follow these. All accidents can be avoided.
- A person who has not read and understood all operating and safety instructions is not qualified to operate the machine. An untrained operator exposes himself and bystanders to possible serious injury or death.
- Do not modify the equipment in any way. Unauthorized modification may impair the function and/or safety and could affect the life of the equipment.
- Think **SAFETY**! Work **SAFELY**!

GENERAL SAFETY

1. Read and understand the Operator's Manual and all safety signs before operating, maintaining or adjusting the HY-Roller.



2. Install and properly secure all shields and guards before operating. Use hitch pin with a mechanical locking device.
3. Have a first-aid kit available for use should the need arise and know how to use it.



4. Have a fire extinguisher available for use should the need arise and know how to use it.



5. Wear appropriate protective gear. This list includes but is not limited to:
   - A hard hat
   - Protective shoes with slip resistant soles
   - Protective glasses or goggles
   - Heavy gloves
   - Wet weather gear
   - Hearing protection
   - Respirator or filter mask

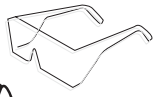



6. Clear the area of people, especially small children, and remove foreign objects from the machine before starting and operating.
7. Do not allow riders.
8. Stop tractor engine, set park brake, remove ignition key and wait for all moving parts to stop before servicing, adjusting, repairing or unplugging.
9. Review safety related items with all operators annually.

Operation

TO THE NEW OPERATOR OR OWNER

The Degelman HY-Roller is designed to provide a smooth and level surface.

It is the responsibility of the owner or operator to read this manual carefully to learn how to operate the machine safely. Safety is everyone's business. By following safe operating practices, a safe environment is provided for the operator and bystanders.

By following the operating instructions in conjunction with a good maintenance program your machine will provide many years of trouble-free service.

OPERATING SAFETY

1. Read and understand the Operator's Manual and all safety signs before using.
2. Stop tractor engine, set park brake, remove ignition key and wait for all moving parts to stop before servicing, adjusting, repairing or unplugging.
3. Keep hands, feet, hair and clothing away from all moving and/or rotating parts.
4. Do not allow riders on the HY-Roller tractor during operation or transporting.
5. Keep all shields and guards in place when operating (if applicable).
6. Clear the area of all bystanders, especially children, before starting.
7. Do not operate machine on overly steep side hills or slopes.
8. Be careful when working around or maintaining a high-pressure hydraulic system. Ensure all components are tight and in good repair before starting.
9. Clean all reflectors, lights and the SMV sign before transporting on a highway or public road. Be sure to check with local highway authorities and comply with their lighting requirements.

Transport Position

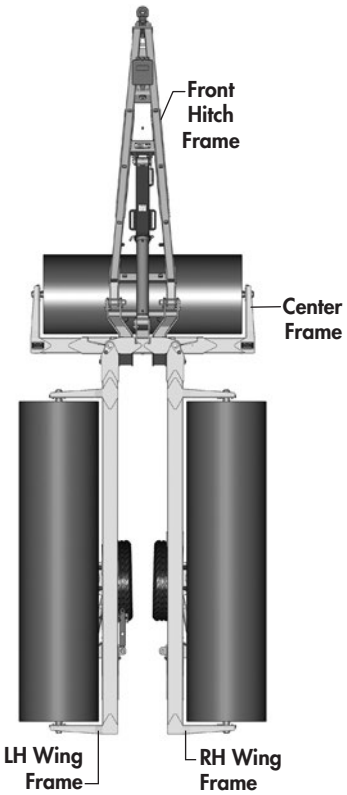

Field Position

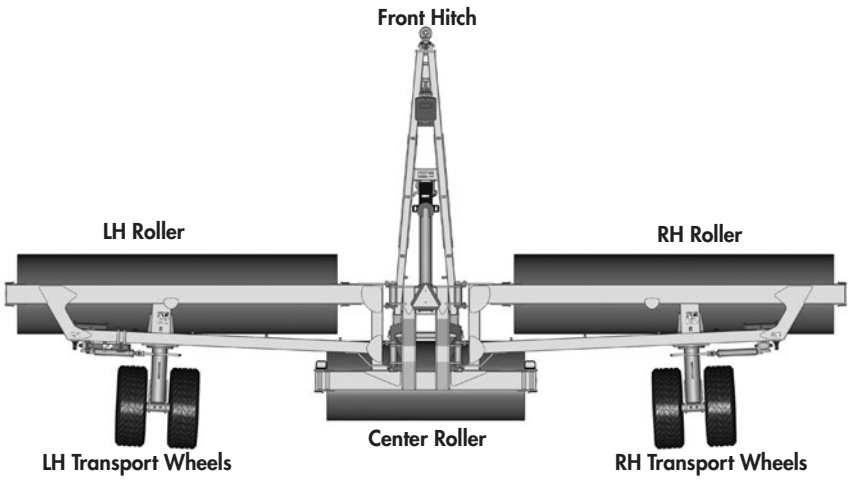

BREAK-IN

Although there are no operational restrictions on the HY-Roller when it is new, there are some checks that should be done when using the machine for the first time, follow this procedure:

⚠ **IMPORTANT:** *It is important to follow the Break-In procedures especially those listed in the "Before using" section below to avoid damage:*

A. Before using:

1. Read Safety Info. & Operator's Manual.
2. Complete steps in "Pre-Operation Checklist".
3. Lubricate all grease points.
4. Check all bolt tightness.

B. After operating for 2 hours:

1. Check all hardware. Tighten as required.
2. Check all hydraulic system connections. Tighten if any are leaking.

C. After operating for 8 hours:

1. Repeat Step B.
2. Go to the service schedule as outlined in the "Service & Maintenance" section.

PRE-OPERATION CHECKLIST

It is important for both personal safety and maintaining good operational condition of the machine that the pre-operational checklist be followed.

Before operating the machine and each time thereafter, the following areas should be checked off:

- ☐ Lubricate the machine per the schedule outlined in the "Maintenance Section".
- ☐ Use only a tractor with adequate power to pull the HY-Roller under ordinary operating conditions.
- ☐ Ensure that the hitch clevis is set at the correct height for the tractor drawbar and trailer height.
- ☐ Ensure that the machine is properly attached to the tractor using a drawbar pin with provisions for a mechanical retainer. Make sure that a retainer such as a Klik pin is installed.

  NOTE: *It is important to pin the draw bar in the central location only.*
- ☐ Check tires and ensure that they are inflated to the specified tire pressure.

  Transport Wheel Tires

  385/65 R22.5: **65 PSI (448 kPa)**
- ☐ Ensure that a safety chain is installed on the hitch.
- ☐ Check oil level in the tractor hydraulic reservoir. Top up as required.
- ☐ Inspect all hydraulic lines, hoses, fittings and couplers for tightness. Tighten if there are leaks. Use a clean cloth to wipe any accumulated dirt from the couplers before connecting to the tractor's hydraulic system.
- ☐ Inspect all bolt connections and ensure bolts are properly tightened.

HOOK-UP / UNHOOKING

The HY-Roller should always be parked on a level, dry area that is free of debris and foreign objects. Follow this procedure to hook-up:

1. Clear the area of bystanders & remove foreign objects from the machine and working area.
2. Make sure there is enough room to back the tractor up to the trailer hitch.



3. Start the tractor and slowly back it up to the hitch point.
4. Stop the tractor engine, place all controls in neutral, set park brake and remove ignition key before dismounting.
5. Use the jack to raise or lower the hitch to align with the drawbar.
6. Install a drawbar pin with provisions for a mechanical retainer such as a KLIK pin. Install the retainer.
7. Install a safety chain between the tractor and the hitch.
8. Connect the hydraulics. To connect, proceed as follows:

   • Use a clean cloth or paper towel to clean the couplers on the ends of the hoses. Also clean the area around the couplers on the tractor. Remove the plastic plugs from the couplers and insert the male ends.

   • Be sure to match the pressure and return line to one valve bank.
9. Connect lights (electrical socket plug) to tractor.
10. Raise the hitch jack into the transport position.
11. When unhooking from the tractor, reverse the above procedure.

⚠ **IMPORTANT:** *NEVER disconnect the HY-Roller from the tractor when stopped on sloped ground. The HY-Roller should always be parked on a level, dry area that is free of debris and foreign objects.*

⚠ FLOATING HITCH SYSTEM

FRONT TRANSPORT CYLINDER CIRCUIT MUST BE SET TO FLOAT DURING FIELD OPERATION

The floating hitch system provides the HY-Roller with more flexibility while in the field position. The hydraulic cylinder must be set on "float" to allow the hitch pole to contour more effectively and prevent strain or possible damage to the machine.

⚠ **IMPORTANT:** *It is extremely important that the front hitch cylinder circuit be set in the "float" position when operating the HY-Roller for proper operation and to prevent damage to the machine. For more information on setting a hydraulic circuit in "float" please refer to your tractor's operational manual.*



BACK-UP BAR OPERATION

NOTE: The "Back-Up Bar" may be installed to keep the wings from separating when backing-up the roller into a desired location for storage or parking.

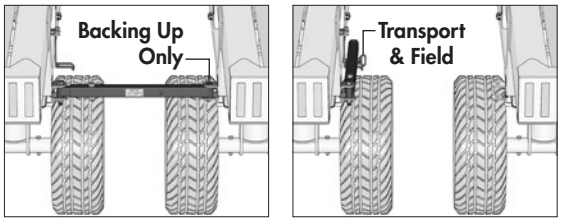

⚠ **IMPORTANT:** The "Back-Up Bar" is only intended to be used to aid in maneuvering when backing-up the roller. It is not recommended to use the "Back-Up Bar" while transporting.

TRANSPORT TO FIELD POSITION

(Note: Model shown in images may differ than your model.)

1) Drive HY-Roller onto level ground, straight behind the tractor.

• Ensure there is plenty of room behind and to the sides of the HY-Roller for backing into field position.

2) Remove all **3** red transport bars. *(1 on front transport cylinder and 2 located on rear endwheel cylinders).*

• Place the transport bars into the storage positions shown and secure with lock-pins.

Note: You may need to activate (slightly extend) the hydraulic cylinders to allow removal of the cylinder transport bars.

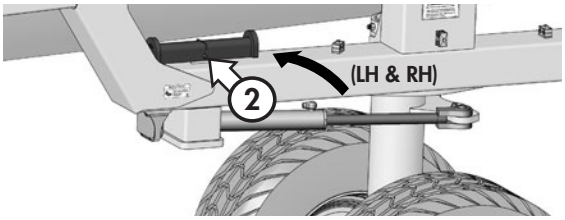

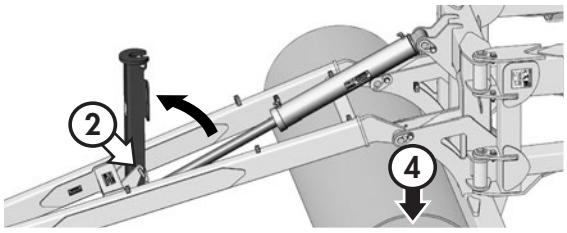

NOTE: If engaged, un-pin the "Back-Up Bar" and secure it into the storage position.

3) Activate the End Wheel Circuits to turn each Endwheel to around 20° max. Try to match the angles on each wheel.

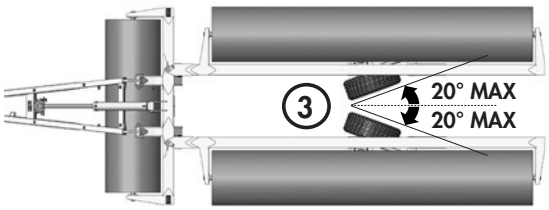

4) Retract the transport cylinder to lower the center drum until the weight of the drum is on the ground.

5) Slowly back-up the HY-Roller until wings are slightly spread.

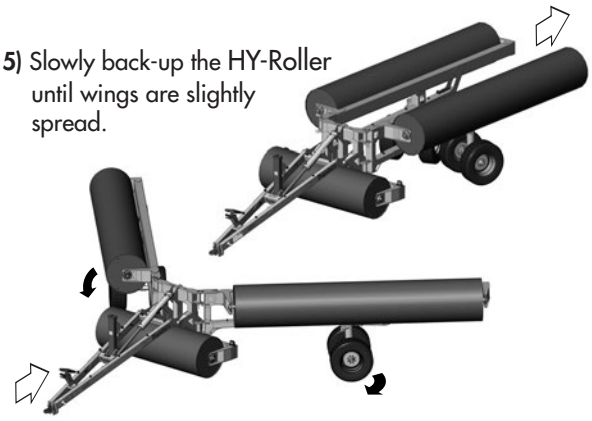

6) Turn the wheels while backing up. Avoid pushing on the sidewalls of the tires.



7) Backup until the wings are straight in line with the center frame. Ensure wheels are straight before Step 8.



8) Activate the transport cylinder to retract the cylinder. Retract until all the roller drums are on the ground. Once all drums are on ground, set transport circuit to "float" position.

⚠ **IMPORTANT:** Set the tractor hydraulic remote that activates the transport cylinder into "float" position. This will allow the hitch pole to contour more effectively and prevent strain or possible damage to the machine.

FIELD TO TRANSPORT POSITION

(Note: Model shown in images may differ than your model.)

1) Drive HY-Roller on level ground. Fully extend transport cylinder.

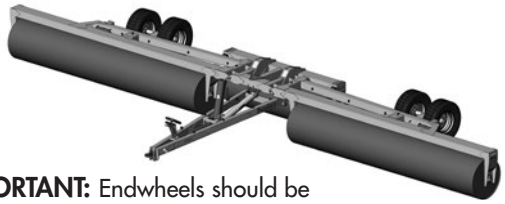

⚠ **IMPORTANT:** Endwheels should be perpendicular to the beam. This will allow the wheel to naturally roll under the machine.

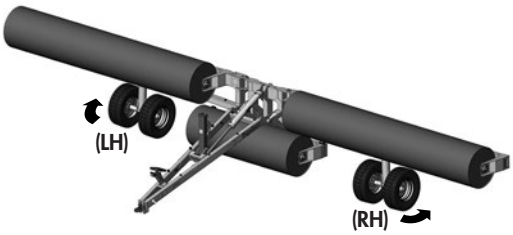

2) Slowly extend LH Endwheel cylinder until the wheel is completely turned.

⚠ **IMPORTANT:** Turn only one wheel at a time to help anchor the machine while the other wheel turns.

3) Slowly extend RH Endwheel cylinder until the wheel is completely turned.

4) Drive forward until the roller trails behind.

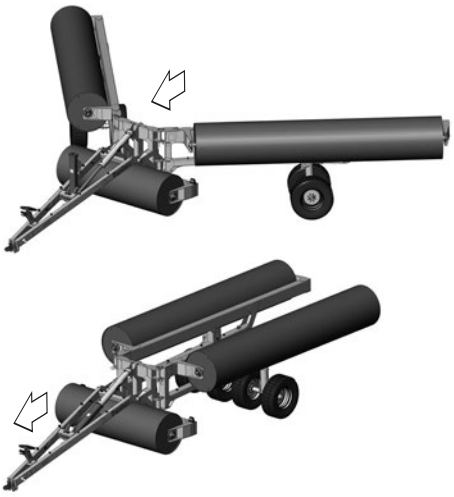

5) Install the cylinder transport bars onto both LH & RH endwheel cylinder shafts and secure.

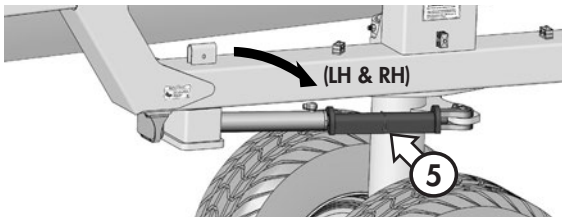

6) Install the transport cylinder transport bar and secure in place. It is advised to put weight on the transport cylinder lock after locking the cylinder.

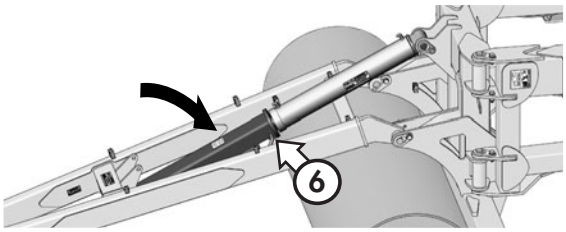

7) Read & follow necessary "Transport Safety" procedures.

TRANSPORT SAFETY

1. Read and understand ALL the information in the Operator's Manual regarding procedures and SAFETY when operating the HY-Roller in the field/yard or on the road.
2. **NOTE:** It is <u>not recommended</u> to use the "Back-Up Bar" while transporting.
3. Check with local authorities regarding machine transport on public roads. Obey all applicable laws and regulations.
4. Always travel at a safe speed. Use caution when making corners or meeting traffic.
5. MAXIMUM RECOMMENDED TRANSPORT SPEED: 70 km/h or 43 mph for road conditions. (*Field speeds may be lower.*)
6. Make sure the SMV (Slow Moving Vehicle) emblem and all the lights and reflectors that are required by the local highway and transport authorities are in place, are clean and can be seen clearly by all overtaking and oncoming traffic.
7. Keep to the right and yield the right-of-way to allow faster traffic to pass. Drive on the road shoulder, if permitted by law.
8. Always use hazard warning flashers on tractor when transporting unless prohibited by law.
9. Always use a pin with provisions for a mechanical retainer and a safety chain when attaching to a tractor or towing vehicle.

⚠ **IMPORTANT:** ***<u>Under No Circumstances</u>*** *should there ever be riders while the HY-Roller is in transport.*



MAINTENANCE SAFETY

1. Review the Operator's Manual and all safety items before working with, maintaining or operating the HY-Roller.
2. Stop the tractor engine, set park brake, remove ignition key and wait for all moving parts to stop before servicing, adjusting, repairing or unplugging.
3. Keep hands, feet, clothing and hair away from all moving and/or rotating parts.



4. Clear the area of bystanders, especially children, when carrying out any maintenance and repairs or making any adjustments.
5. Place safety stands or large blocks under the frame before removing tires or working beneath the machine.



6. Be careful when working around or maintaining a high-pressure hydraulic system. Wear proper eye and hand protection when searching for a high pressure hydraulic leak. Use a piece of wood or cardboard as a backstop when searching for a pin hole leak in a hose or a fitting.
7. Always relieve pressure before disconnecting or working on hydraulic system.

SERVICE

GREASING

Grease: Use an SAE multipurpose grease with extreme pressure (EP) performance. Also acceptable is an SAE multipurpose lithium.

1. Use only a hand-held grease gun for all greasing.
2. Wipe grease fitting with a clean cloth before greasing, to avoid injecting dirt.
3. Replace and repair broken fittings immediately.
4. If fittings will not take grease, remove and clean thoroughly. Also clean lubricant passageway. Replace fitting if necessary.
5. Inject grease until you see grease being expelled from the bearing or bushing areas.

MAINTENANCE CHECKLIST

After reviewing the Maintenance and Hydraulic Safety Information, use the Maintenance Checklist provided for regular service intervals and keep a record of all scheduled maintenance:

(Initial break-in review.)

A. Before using:

1. Read Safety Info. & Operator's Manual.
2. Complete "Pre-Operation Checklist"
3. Check all Bolt Tightness.

B. After operating for **2 hours**:

1. Check all hardware. Tighten as required.
2. Check all hydraulic system connections. Tighten if any are leaking.

Maintenance Check - 10 Hours

- Check for worn or damaged parts
- Hydraulic fluid leaks
- Damaged hoses
- Check tire pressure:

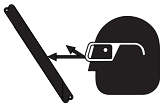



Transport Wheel Tires
385/65 R22.5: **65 PSI (448 kPa)**

Maintenance Check - 50 Hours

- Grease hubs & spindles
- Grease transport wheel mounts
- Check working points & pins
- Safety signs clean



Annually

- Bolt tightness
- Wheel bearings

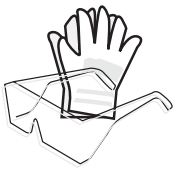



HARDWARE SPECIFICATIONS

Note: Unless stated otherwise, hardware is typically:
Hex, Plated GR5 UNC or P8.8 (metric)

TORQUE SPECIFICATIONS

TORQUE

Checking Bolt Torque

The tables below give correct torque values for various bolts and capscrews. Tighten all bolts to the torques specified in chart unless otherwise noted. Check the tightness of bolts periodically, using these bolt torque charts as a guide. Replace hardware with the same strength (Grade/Class) bolt.

IMPERIAL TORQUE SPECIFICATIONS

(Coarse Thread - based on "Zinc Plated" values)



Size	Grade 5	Grade 8
	lb.ft (*N.m*)	lb.ft (*N.m*)
1/4"	**7 (*10*)**	**10 (*14*)**
5/16"	15 (*20*)	20 (*28*)
3/8"	**25 (*35*)**	**35 (*50*)**
7/16"	40 (*55*)	60 (*80*)
1/2"	**65 (*90*)**	**90 (*120*)**
9/16"	90 (*125*)	130 (*175*)
5/8"	**130 (*175*)**	**180 (*245*)**
3/4"	230 (*310*)	320 (*435*)
7/8"	**365 (*495*)**	**515 (*700*)**
1"	550 (*745*)	770 (*1050*)
1-1/8"	**675 (*915*)**	**1095 (*1485*)**
1-1/4"	950 (*1290*)	1545 (*2095*)
1-3/8"	**1250 (*1695*)**	**2025 (*2745*)**
1-1/2"	1650 (*2245*)	2690 (*3645*)

METRIC TORQUE SPECIFICATIONS

(Coarse Thread - based on "Zinc Plated" values)



Size	Class 8.8	Class 10.9
	lb.ft (*N.m*)	lb.ft (*N.m*)
M6	**7 (*10*)**	**10 (*14*)**
M8	16 (*22*)	23 (*31*)
M10	**30 (*42*)**	**45 (*60*)**
M12	55 (*75*)	80 (*108*)
M14	**90 (*120*)**	**125 (*170*)**
M16	135 (*185*)	195 (*265*)
M18	**190 (*255*)**	**270 (*365*)**
M20	265 (*360*)	380 (*515*)
M22	**365 (*495*)**	**520 (*705*)**
M24	460 (*625*)	660 (*895*)
M27	**675 (*915*)**	**970 (*1315*)**
M30	915 (*1240*)	1310 (*1780*)
M33	**1250 (*1695*)**	**1785 (*2420*)**
M36	1600 (*2175*)	2290 (*3110*)

HYDRAULIC SAFETY

- Make sure that all components in the hydraulic system are kept in good condition and are clean.
- Replace any worn, cut, abraded, flattened or crimped hoses and metal lines.
- Do not attempt any makeshift repairs to the hydraulic lines, fittings or hoses by using tape, clamps or cements. The hydraulic system operates under extremely high-pressure. Such repairs will fail suddenly and create a hazardous and unsafe condition.
- Wear proper hand and eye protection when searching for a high-pressure hydraulic leak. Use a piece of wood or cardboard as a backstop instead of hands to isolate and identify a leak.

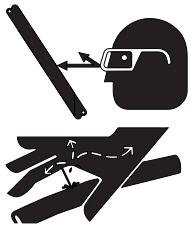

- If injured by a concentrated high-pressure stream of hydraulic fluid, seek medical attention immediately. Serious infection or toxic reaction can develop from hydraulic fluid piercing the skin surface.
- Before applying pressure to the system, make sure all components are tight and that lines, hoses and couplings are not damaged.

HYDRAULIC HOSE SPECIFICATIONS

Note: Unless otherwise stated, Hydraulic Hoses are either 3/8 or 1/2 with 3/4 JIC female swivel ends.

HYDRAULIC HOSE INSTALLATION TIPS

The following tips are to help you identify some possible problem areas in the installation of hydraulic hoses.

1. Installation should be completed in a clean environment clear of dust and contaminants. Hoses and fittings should be capped if not installed.
2. Ensure hoses are not twisted during installation as this may weaken the hose. Also, the pressure in a twisted hose may loosen fittings or connections.
3. Allow sufficient bend radius in hoses when installing to prevent lines from collapsing and flow becoming restricted.
4. When installing hoses in an area of movement or flexing, allow enough free length for motion and to ensure fitting connections are not stressed.
5. Ensure hoses are properly clamped and secured in position after routing is complete to provide a cleaner installation and prevent possible damage or hazards.

HYDRAULIC FITTING INSTALLATION

The following info is to help you identify and properly install some of our standard hydraulic fittings.

SAE (JIC) 37° Flare

JIC fittings - Metal-to-metal sealing type fittings featuring a 37° flare (angle of sealing surface) and straight UNF (Unified National Fine) Threads.

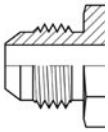

(Lubricated Values) Dash	Thread Size	Torque - lb.ft (*N.m*)	
-4	7/16 - 20	9-12	(12-16)
-6	9/16 - 18	14-20	(*19-27*)
-8	3/4 - 16	27-39	(*37-53*)
-10	7/8 - 14	36-63	(*50-85*)
-12	1-1/16 - 12	65-88	(*90-119*)

Tightening JIC 37° Flare Type Fittings

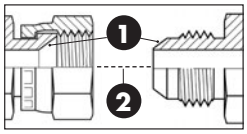

1. Check flare and flare seat for defects that might cause leakage.
2. Align fittings before tightening. Lubricate connections & hand tighten swivel nut until snug.
3. Using two wrenches, torque to values shown in table.

Alternate Installation Method

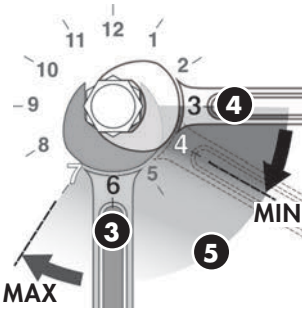

3. Using two wrenches. Place one wrench on the fixed connector body at a clock position of **6** o'clock.
4. Place the second wrench on the second connection as close to the **3** o'clock position as possible.
5. Tighten by rotating the second connection firmly to at least the **4** o'clock position, but no more than the **7** o'clock position. Typically, the larger the fitting size the less rotation required.

ORFS (O-Ring Face Seal)

ORFS fittings use an O-ring compression method to seal. This method offers a high level of sealing along with good vibration resistance. Male fittings include an O-ring located in a groove on the flat face. Female fittings feature a flat face and UNF straight threaded swivel nut.

The **Torque** method is recommended for ORFS installation.

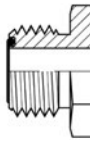

Dash	Thread Size	Torque - lb.ft (*N.m*)	
-4	9/16 - 18	18	(*25*)
-6	11/16 - 16	30	(*40*)
-8	13/16 - 16	40	(*55*)
-10	1 - 14	60	(*80*)
-12	1-3/16 - 12	85	(*115*)

Tightening ORFS (O-Ring Face Seal) Fittings

1. Inspect components and ensure the O-Ring seal is undamaged and properly installed in the groove of the face seal. Replacing the O-Ring may be necessary.
2. Align, thread into place and hand tighten.
3. Tighten to proper torque from the table shown above.

Note: A **DASH** size refers to a diameter of a hose (*inside*) or of a tube (*outside*) measured in 1/16″ increments.
For example, a ***Hose*** specified as *dash* **8** or **-8** would have an **inside** diameter of **8***/16″* or **1/2″**.
Alternatively, a ***Tube*** specified as *dash* **8** or **-8** would have an ***outside*** diameter of **8***/16″* or **1/2″**.

ORB (O-Ring Boss)

Male ORB fittings have straight UNF threads, a sealing face and an O-ring. The female fittings are generally found in the ports of machines and feature straight threads, a machined surface, and a chamfer to accept the O-ring. Sealing is achieved through the compression of the male O-ring against the chamfered sealing face of the female fitting.

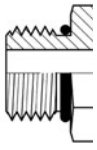

(Lubricated Values) Dash	Thread Size	Torque Non-Adjustable lb.ft (*N.m*)	Torque Adjustable lb.ft (*N.m*)
-4	7/16 - 20	30 (*40*)	15 (*20*)
-6	9/16 - 18	35 (*46*)	35 (*46*)
-8	3/4 - 16	60 (*80*)	60 (*80*)
-10	7/8 - 14	100 (*135*)	100 (*135*)
-12	1-1/16 - 12	135 (*185*)	135 (*185*)

Tightening ORB (O-Ring Boss) Fittings

Non-adjustable Port End Assembly

1. Inspect the components to ensure that male and female threads and sealing surfaces are free of nicks, burrs, scratches, or any foreign material.
2. Ensure O-Ring seal is properly installed and undamaged.
3. Lubricate threads and O-ring to help the O-ring slide past the port entrance corner and avoid damaging it.
4. Screw the fitting into position tighten to proper torque value from the table shown above.

Adjustable Port End Assembly

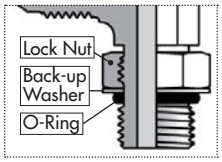

1. Inspect the components to ensure male & female threads and sealing surfaces are free of nicks, burrs, scratches, or any foreign material.
2. Ensure O-Ring seal is properly installed and undamaged.
3. Lubricate threads and O-ring to help the O-ring slide smoothly into the port and avoid damage.
4. Loosen back the lock nut as far as possible. Make sure back-up washer is not loose and is pushed up as far as possible.
5. Screw the fitting into port until the back-up washer or the retaining ring contacts face of the port. Light wrenching may be necessary. Over tightening may damage washer.
6. To align the end of the fitting to accept incoming tube or hose assembly, unscrew the fitting by the required amount, but not more than one full turn.
7. Using two wrenches, hold the fitting in desired position and tighten the locknut to the proper torque value from the table located above.
8. Inspect to ensure that O-ring is not pinched and that washer is seated flat on the face of the port.

WHEEL HUB REPAIR

IMPORTANT: *Be sure to block up unit securely before removing tires.*

DISASSEMBLY

1. Remove dust cap.
2. Remove cotter pin from nut.
3. Remove nut and washer.
4. Pull hub off spindle.
5. Dislodge the inner cone bearing and dust seal.
6. Inspect cups that are press fitted into hub for pits or corrosion and remove if necessary.
7. Inspect and replace defective parts with new ones.

ASSEMBLY

1. If cups need replacing, be careful to install them gently and evenly into hub until they are fully seated.
2. Apply a thick wall of grease inside hub. Pack grease in cones.
3. Install inner cone and dust seal as illustrated.
4. Position hub onto spindle and fill surrounding cavity with grease.
5. Assemble outer cone, washer and nut.
6. Tighten nut while rotating hub until there is a slight drag.
7. Turn nut back approximately 1/2 turn to align cotter pin hole with notches on nut.
8. Install cotter pin and bend legs sideways over nut.
9. Fill dust cap half full of grease and gently tap into position.
10. Pump grease into hub through grease fitting until lubricant can be seen from dust seal.

COMMON HUB & SPINDLE COMPONENTS

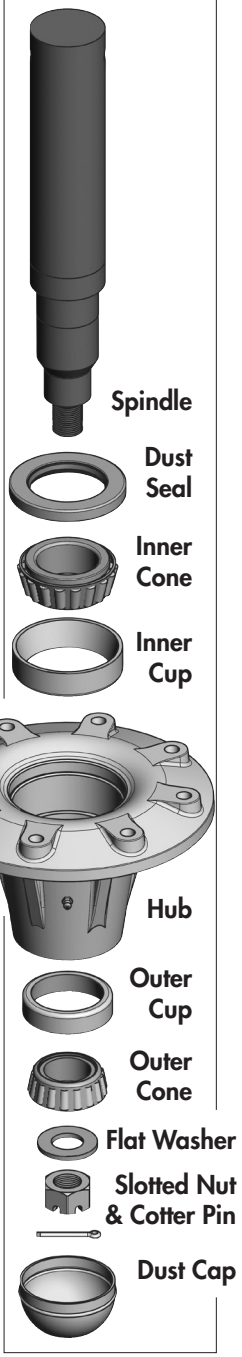

WHEEL NUT & WHEEL BOLT TORQUE

TORQUE

BOLT PATTERNS

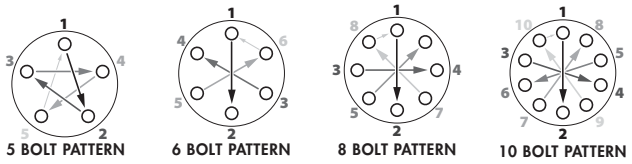

Wheel Nut/Bolt Torque

Size	lb.ft (N.m)
9/16	120-130 (165-175)
5/8	185-190 (250-260)
3/4	280-300 (380-405)

Wheel Tightening Procedure

1. Install and **hand tighten** nuts/bolts.
2. Tighten to approx. **20% Torque** value using the Bolt **Star or CrissCross** patterns shown above.
3. Tighten to **Full Torque** value using the **Star or CrissCross** pattern.
4. If applicable, install **Rear Locknuts** using **Wheel Torque Values**.

TIRE SAFETY

1. Failure to follow proper procedures when mounting a tire on a wheel or rim can produce a blow out which may result in serious injury or death.
2. Do not attempt to mount a tire unless you have the proper equipment and experience to do the job.
3. Have a qualified tire dealer or repair serviceman perform required tire maintenance.

HYDRAULIC CYLINDER REPAIR

PREPARATION

When cylinder repair is required, clean off unit, disconnect hoses and plug ports before removing cylinder.

When removed, open the cylinder ports and drain the cylinder's hydraulic fluid.

Examine the type of cylinder. Make sure you have the correct tools for the job.

You may require the following tools:

- *Proper **Seal Kit***
- *Allen Key Set*
- *Emery cloth*
- *Torque Wrench*

Threaded Head Cylinder
(Monarch)

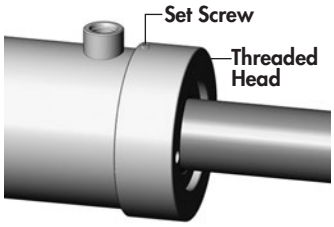

CYLINDER ROD LOCKNUT TORQUE VALUES

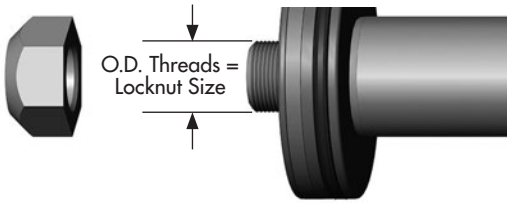

LOCKNUT SIZE (PISTON)	TORQUE VALUE
3/8 - 24 UNF	25-30 lb.ft (35-42 *N.m*)
1/2 - 20 UNF	**40-60 lb.ft *(55-80 N.m)***
5/8 - 18 UNF	95-105 lb.ft (130-140 *N.m*)
3/4 - 16 UNF	**175-225 lb.ft *(240-305 N.m)***
7/8 - 14 UNF	200-275 lb.ft (270-370 *N.m*)
1 - 14 UNF	**300-380 lb.ft *(405-515 N.m)***
1 1/8 - 12 UNF	400-500 lb.ft (540-675 *N.m*)
1 1/4 - 12 UNF	**500-600 lb.ft *(675-810 N.m)***
1 1/2 - 12 UNF	700-800 lb.ft (950-1085 *N.m*)
1 3/4 - 12 UNF	**800-900 lb.ft *(1085-1220 N.m)***

REPAIRING A THREADED HEAD CYLINDER

Set Screw Style

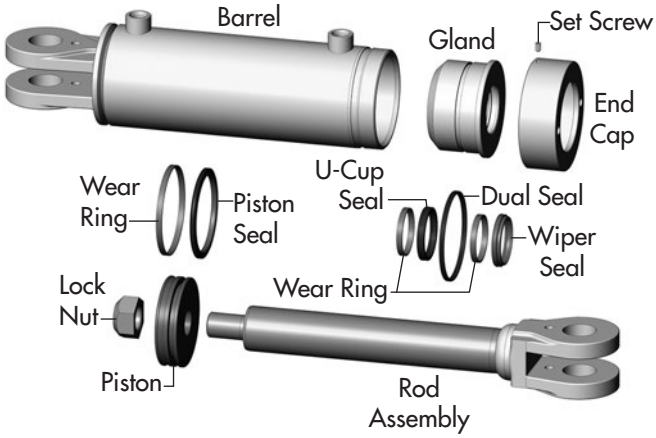

DISASSEMBLY

1. Loosen Set Screw and turn off end cap.
2. Carefully remove piston/rod/gland assemblies.
3. Disassemble the piston from the rod assembly by removing lock nut.

NOTE: *DO NOT* clamp rod by chrome surface.

4. Slide off gland assembly & end cap.
5. Remove seals and inspect all parts for damage.
6. Install new seals and replace damaged parts with new components.
7. Inspect the inside of the cylinder barrel, piston, rod and other polished parts for burrs and scratches. Smooth areas as needed with an emery cloth.

REASSEMBLY

1. Reinstall rod through end cap & gland assembly.
2. Secure piston to rod with lock nut. Torque lock nut to proper value (refer to chart for proper torque value).
3. Lube inside of barrel, piston seals, and gland seals with hydraulic oil.
4. With cylinder body held gently in a vise, insert piston, gland, end cap and rod combination using a slight rocking motion.
5. Apply Loctite anti-seize before installing cylinder end cap.
6. Torque cylinder end cap to 440 lb.ft (600 N.m).
7. Tighten Set Screw on end cap to 6 lb.ft (8 N.m).

REPLACING A PRESSED BUSHING

NOTE: *You may need the following tools: Press, hammer, punch, pry-bar, "Step-Tool"*

Use the following as a guideline for repair:

1. Ensure the area and frame are properly secured, supported, and safe to work on. Safely remove the pin(s), cylinder, and/or components necessary in order to access and work on the damaged bushing.
2. Remove the existing bushing using required tools. In some instances, you may need to cut the damaged bushing in order for easier removal (use proper safety precautions and try not to damage other components if using this method).
3. With the bushing removed, clean and prepare the location for the new bushing insert.

   Note: It is recommended to use a mixture of "*Dish Soap and Water*" as a lubricant on the outside of the composite bushing. **IMPORTANT:** DO NOT use *oil or grease* on outside or inside of composite bushings.

4. Use a stepped tool to ensure the edge of the bushing is not damaged when inserting.

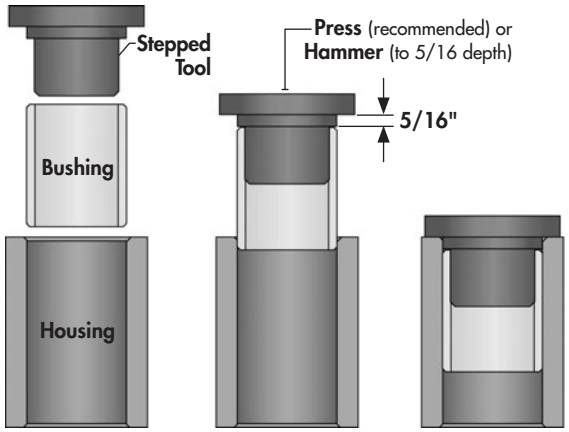

5. Ensuring the bushing is properly aligned, press into hole (preferred method) or hammer into position by striking the stepped tool.
6. Continue to install until the bushing edge is recessed in to a distance of 5/16" to allow for the outer seal to be properly installed. Do not exceed this depth.
7. Repeat procedure for bushing on opposite side.
8. When both bushings are installed to the proper depth, install new seals.
9. Re-assemble all other necessary components.

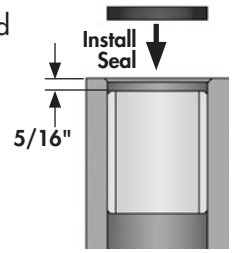

STORAGE

The HY-Roller should be carefully prepared for storage to ensure that all dirt, mud, debris and moisture has been removed.

Follow this procedure when preparing to store:

1. Wash the entire machine thoroughly using a water hose or pressure washer to remove all dirt, mud, debris or residue.
2. Inspect all parts to see if anything has become entangled in them. Remove the entangled material.
3. Lubricate all grease fittings to remove any moisture.
4. Inspect all hydraulic hoses, fittings, lines and couplers. Tighten any loose fittings. Replace any hose that is badly cut, nicked or abraded or is separating from the crimped end of the fitting.
5. Touch up all paint nicks and scratches to prevent rusting.
6. Oil the exposed rams on the hydraulic cylinder to prevent rusting.
7. Select an area that is dry, level and free of debris.

Troubleshooting

GENERAL TROUBLESHOOTING

In the following section, we have listed some of the problems, causes, and solutions that you may encounter. If you encounter a problem that is difficult to solve, even after having read through this troubleshooting section, please call your local dealer or distributor. Before you call, have this manual and the serial number from your unit ready.

SYMPTOM	PROBLEM	SOLUTION
Hydraulics creep down during operation.	Damaged hose or loose fittings.	Search for leaks with a piece of paper (not by hand) and repair.
	Hydraulic cylinder leak.	Replace seals or damaged components.
	Tractor hydraulic leak.	To verify, raise sections half way up, disconnect at tractor. Observe if sections creeps down. If not repair tractor hydraulics.
Hydraulics raise the machine slowly.	Hydraulic pressure from tractor too low.	Check pressure, should be 2500 psi.
	Restriction in hose.	Disconnect & blow out lines with compressed air.
	External hydraulic leak.	Repair as needed.
Oil accumulation on cylinder shaft.	Hydraulic cylinder leak.	Replace seals or damaged components.
	Oil bypassing seals.	Seal manufacturer advises that small amounts of oil getting past seals is desirable. If problem becomes excessive, replace seals.
HY-Roller rollers won't turn or are binding.	Material build-up around rollers. If it is only one roller that doesn't turn, it might be a faulty bearing.	Ensure that there is no material build-up around rollers. Replace the faulty bearing.
Wheel will not turn.	External hydraulic leak or disconnected.	Search for leaks with a piece of paper (not by hand) and repair.
	Hydraulic cylinder leak.	Replace seals or damaged components.
	Transport lock is engaged.	Remove the transport locks.
One wing falls back, not straight with the other wing.	Possible bent pin.	Inspect for possible damage and replace/repair as necessary.
Uneven ground contour, and more compaction on the center section of the HY-Roller.	The transport cylinder is not in the float position.	Ensure that the tractor's hydraulic circuit for this Transport Cylinder is in the "Float" position.
HY-Roller sliding sideways when turning wheels during unfold.	Unlevel & hard ground.	Park on level ground.
	Turning LH & RH wing tires at the same time.	Turn one tire at a time. It helps anchor machine during turning.
	Abrupt wheel turning and not waiting for each wing to finish its motion.	Turn wheels smoothly with less jerking.
One wing won't open up into field position or is opening up to slow.	Uneven ground, unturned wheel, or center roller is not on the ground.	Ensure the HY-Roller is on level ground when backing. Ensure all wheels are slightly turned as specified in the "operation section". Also ensurethat the center roller drum is on the ground.
Difficuly swinging wheels.	Dry turret housing / grease contamination.	Fill cavity with grease.

SAFETY DECALS & REFLECTORS

Keep safety decals and signs clean and legible at all times. Replace safety decals and signs that are missing or have become illegible. Safety decals or signs are available from your Dealer Parts Department.

DECAL LOCATION OVERVIEW

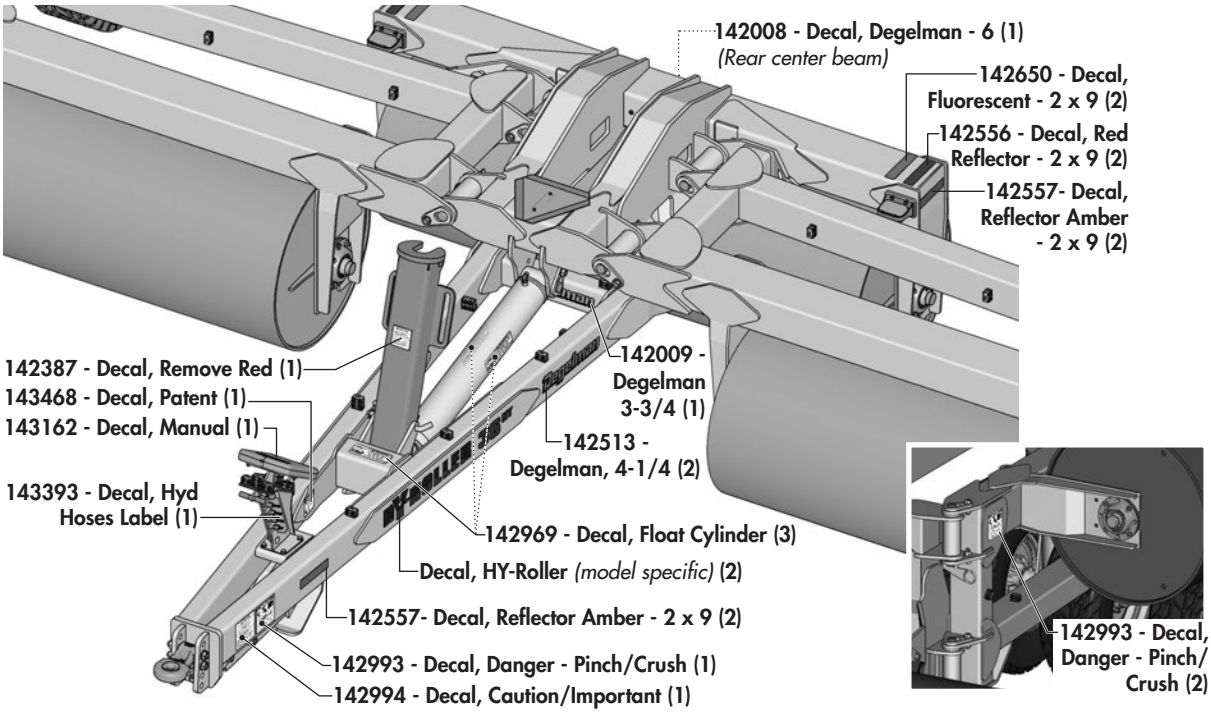

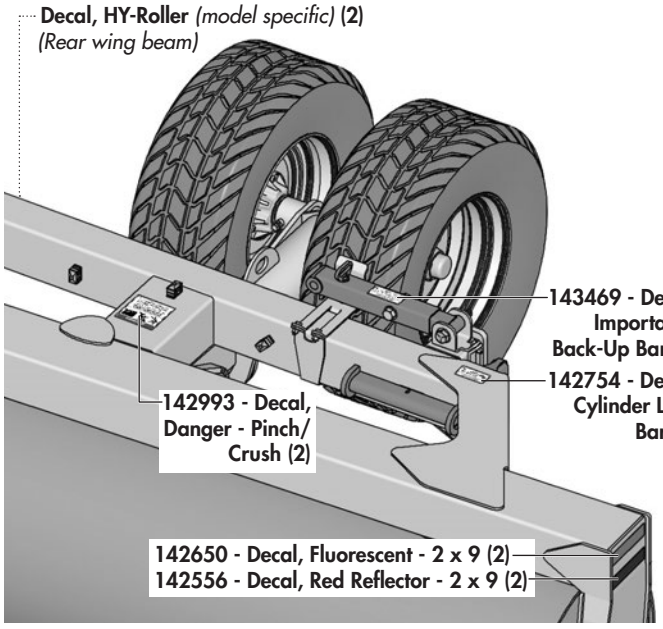

143162 - Decal, Read Manual	(1)
142969 - Decal, Warning - Float Cylinder	(3)
142387 - Decal, Important - Remove Red	(1)
142556 - Decal, Reflector Red - 2 x 9	(4)
142557 - Decal, Reflector Amber - 2 x 9	(4)
142650 - Decal, Fluorescent - 2 x 9	(4)
142754 - Decal, Important - Cyl Lock Bar	(2)
143393 - Decal, Hydraulic Hose Label	(1)
142993 - Decal, Danger - Pinch/Crush	(5)
142994 - Decal, Caution/Important	(1)
143469 - Decal, Important - Back-Up Bar	(1)
142008 - Decal, Degelman - 6”	(3)
142009 - Decal, Degelman - 3-3/4”	(1)
Decal, HY-Roller *(model specific)*	
143680 - Decal, HY-Roller 31NT	(4)
143681 - Decal, HY-Roller XL 31NT	(4)
143682 - Decal, HY-Roller 36NT	(4)
143683 - Decal, HY-Roller XL 36NT	(4)
143684 - Decal, HY-Roller 41NT	(4)
143685 - Decal, HY-Roller XL 41NT	(4)

General Overview

HY-Roller General Assembly Overview

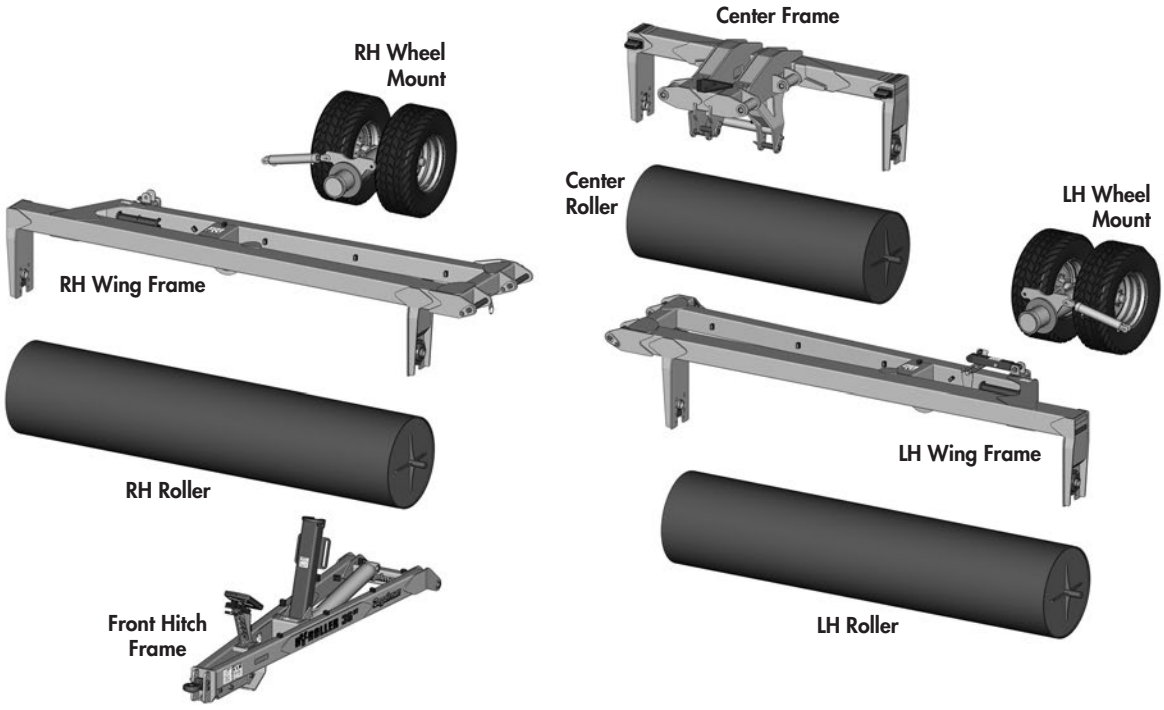

Hitch Frame Components

Front Hitch Components Detail

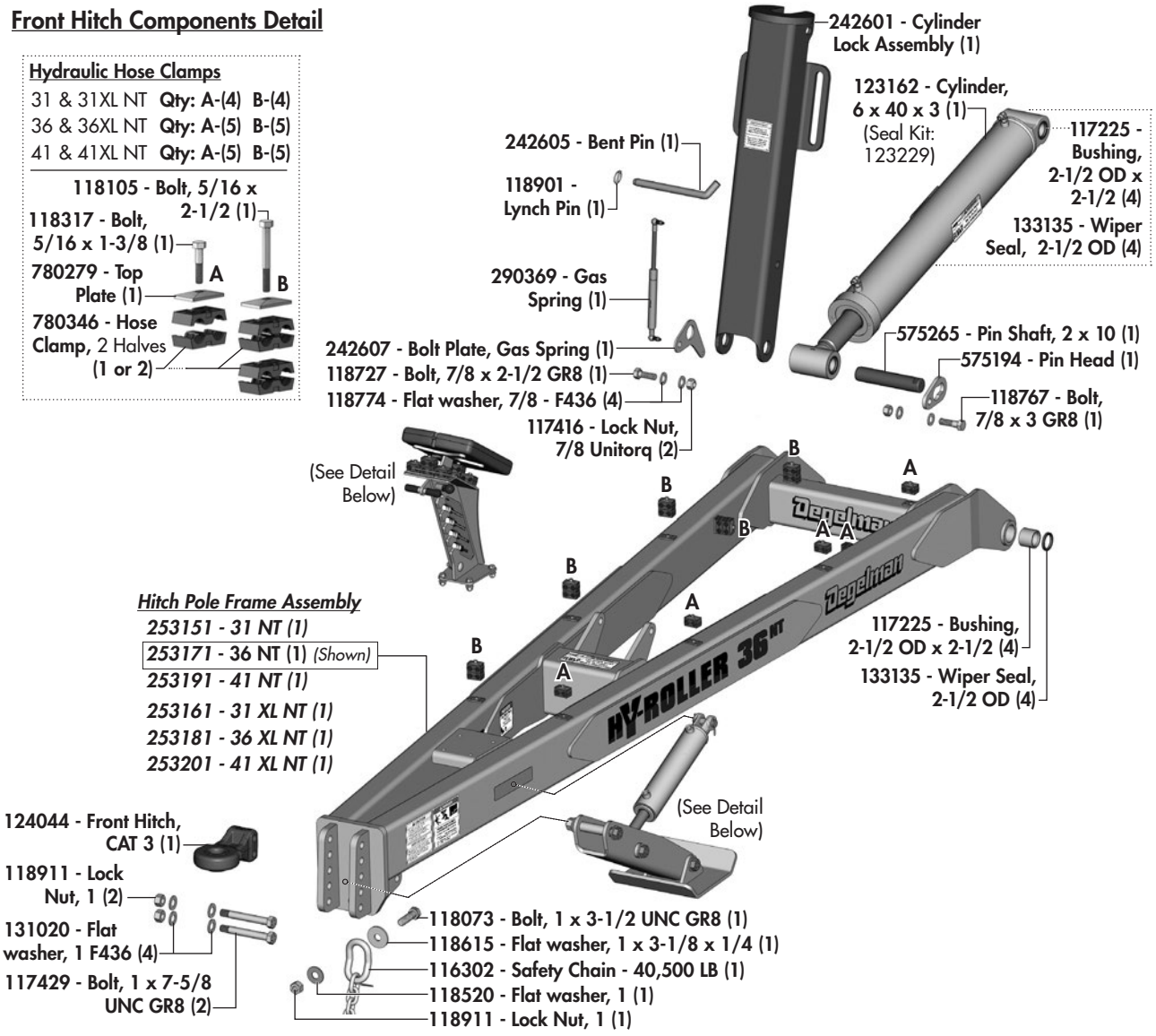

Hydraulic Mount Detail

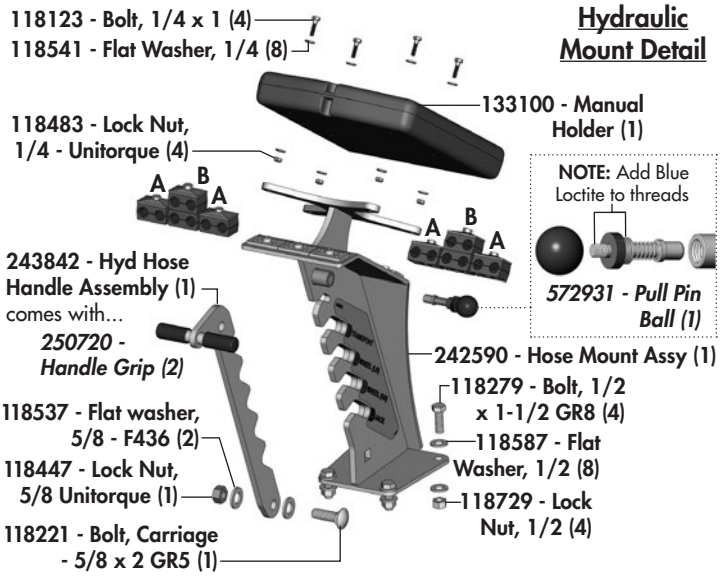

Hydraulic Jack Detail

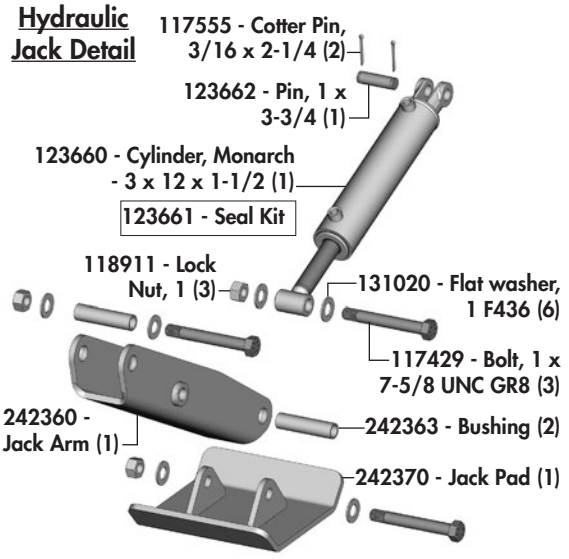

Center Frame Components

Center Frame Exploded Overview

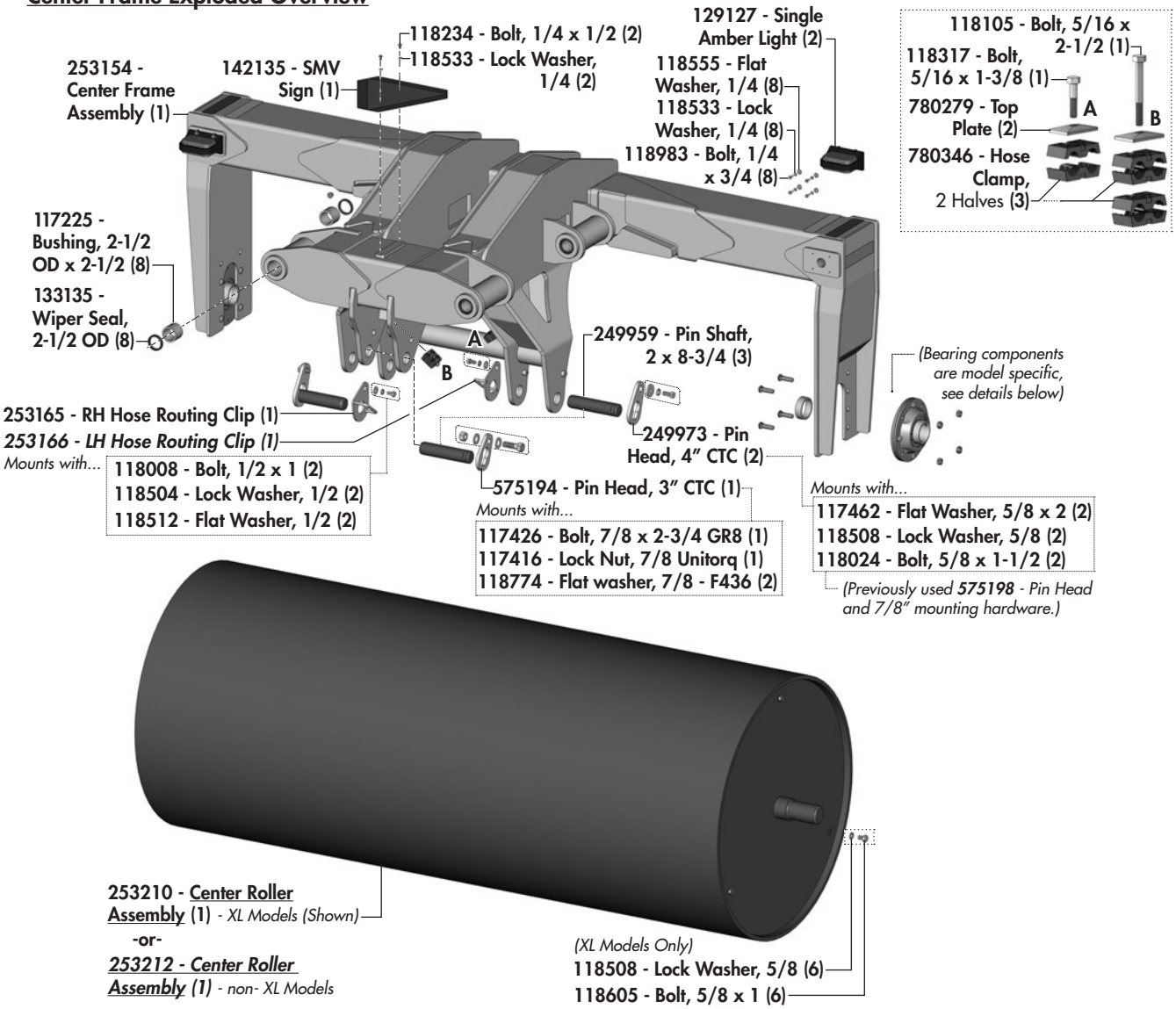

Roller Bearing Components *(non-XL Models)*

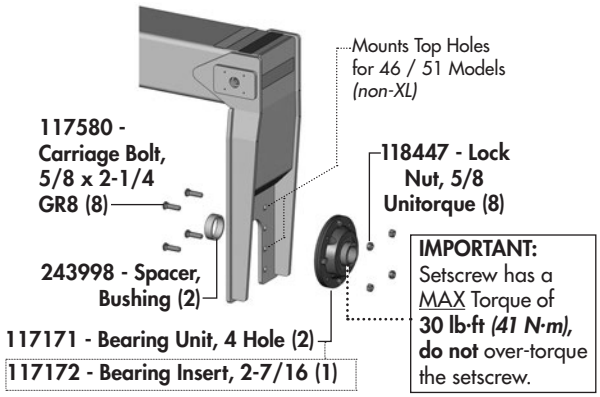

Roller Bearing Components *(XL Models)*

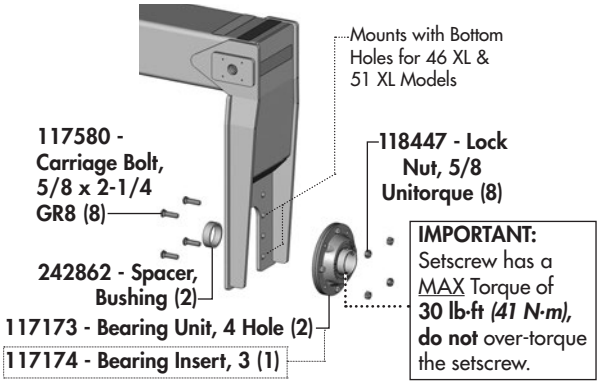

Wing Frame Components

Wing Frame Overview

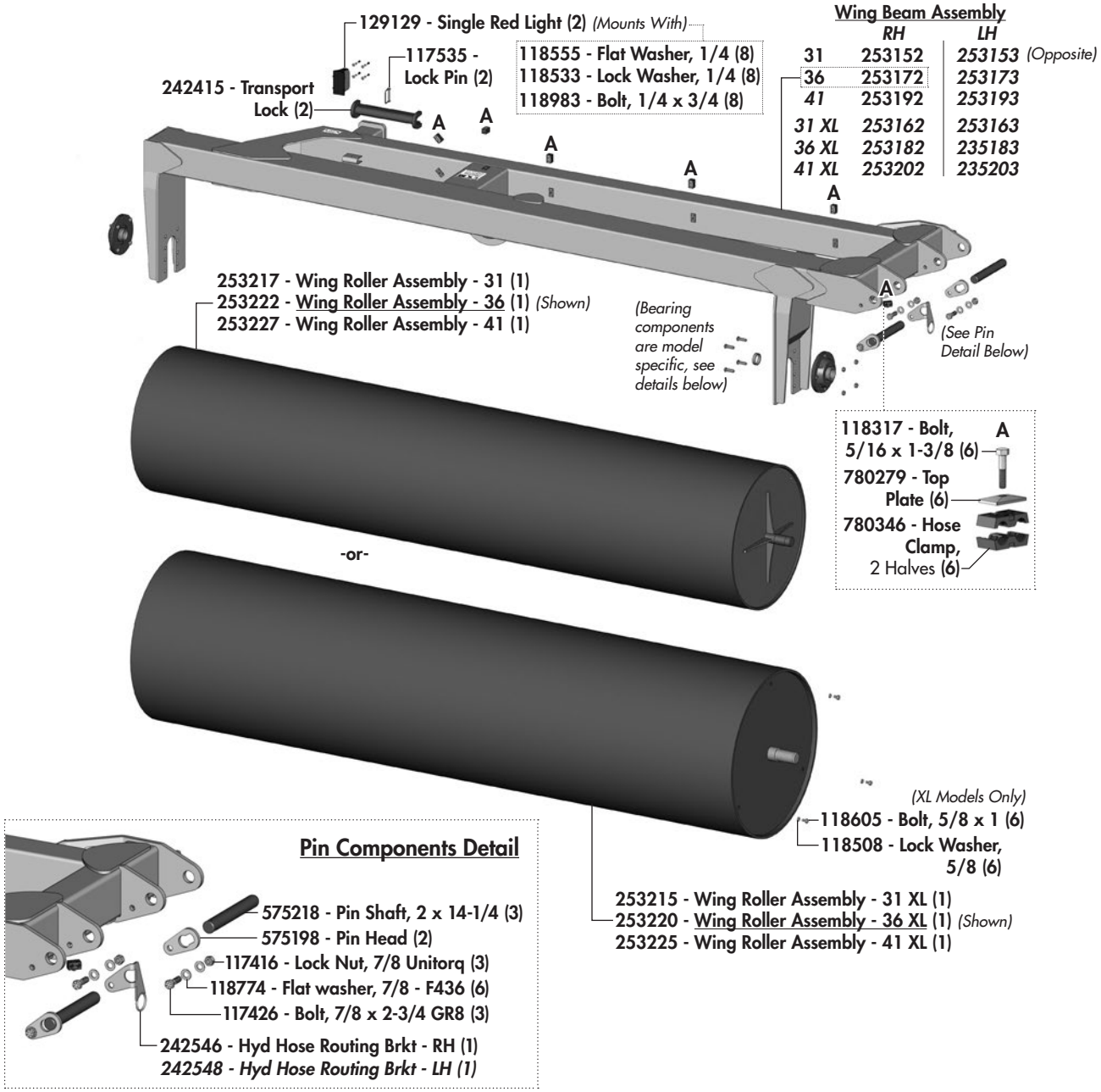

Pin Components Detail

Roller Bearing Components *(non-XL Models)*

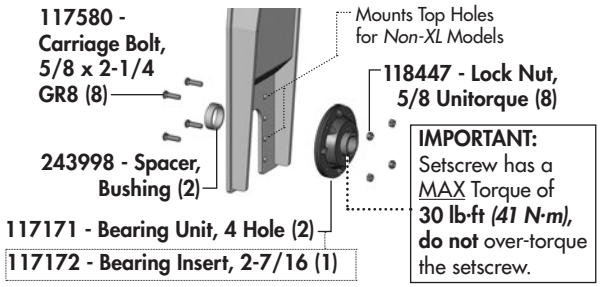

Roller Bearing Components *(XL Models)*

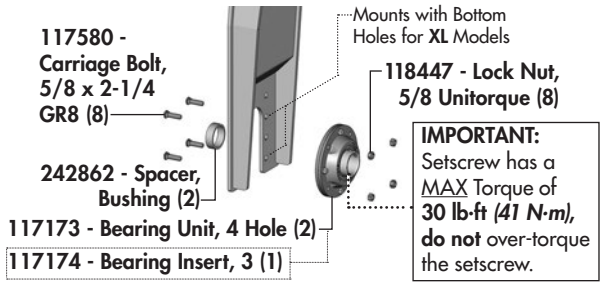

Back-Up Bar Components

Back-up Bar Overview & Components

NOTE: The "Back-Up Bar" may be installed to keep the wings from separating when driving in reverse or backing-up the roller for storage or parking.

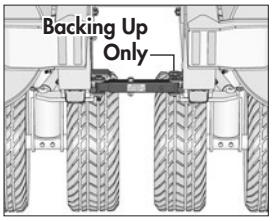

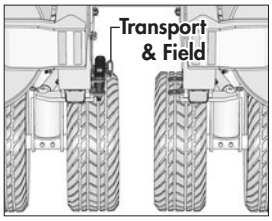

⚠ **IMPORTANT:** The "Back-Up Bar" is only intended to be used to aid in maneuvering when backing-up the roller. It is not recommended to use the "Back-Up Bar" while transporting.

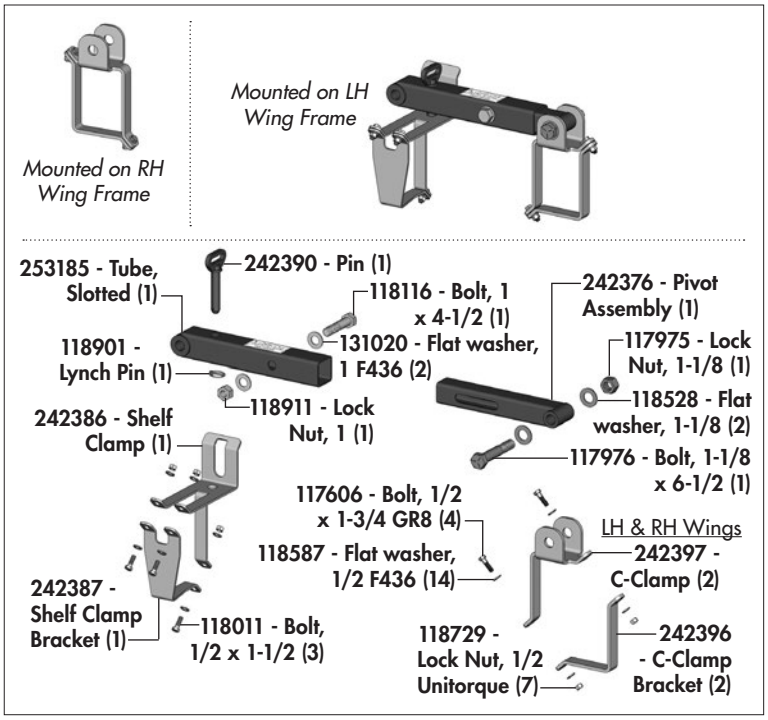

Back-up Bar Install Locations

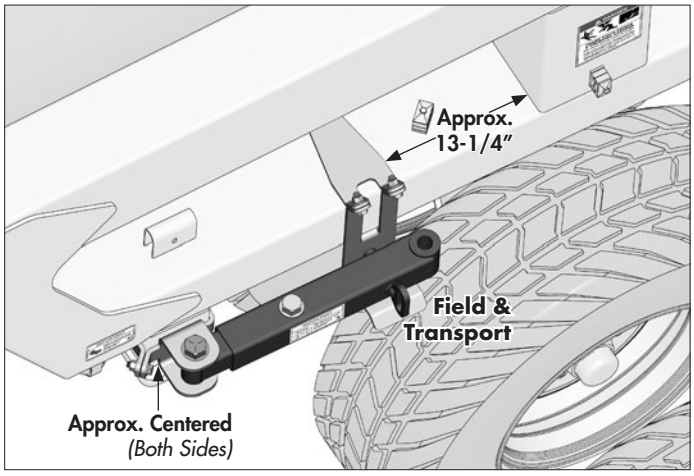

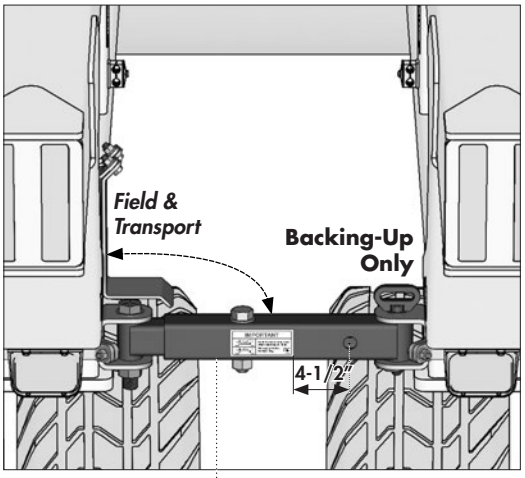

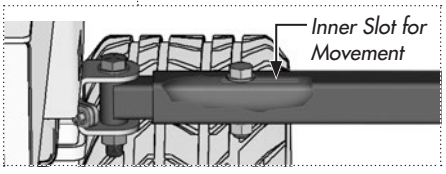

Wheel & Pivot Components

Wheel Assembly Overview



RH Wheel Mount



LH Wheel Mount

Transport Wheel Mount Overview

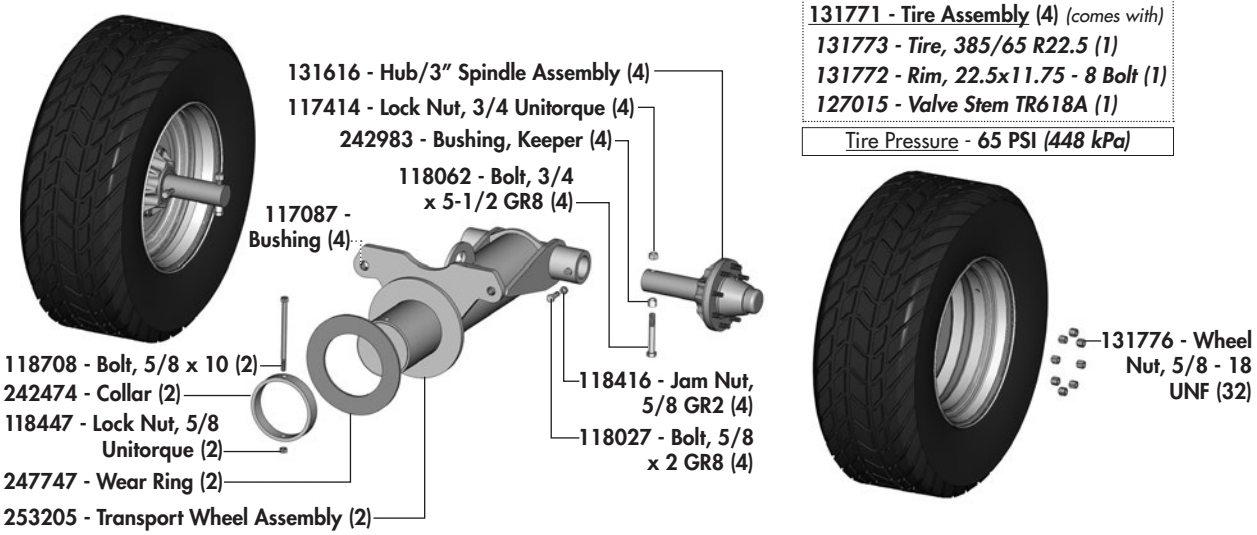

Wheel Assemblies

131771 - Tire Assembly (4) *(comes with)*
- *131773 - Tire, 385/65 R22.5 (1)*
- *131772 - Rim, 22.5x11.75 - 8 Bolt (1)*
- *127015 - Valve Stem TR618A (1)*

Tire Pressure - **65 PSI *(448 kPa)***

131616 - Hub/3" Spindle Assembly (4)

Requires: 131776 - Wheel Nut, 5/8 -18 UNF (8)

Torque, 5/8 Wheel Nuts to: 185-190 lb.ft (250-260 N.m)

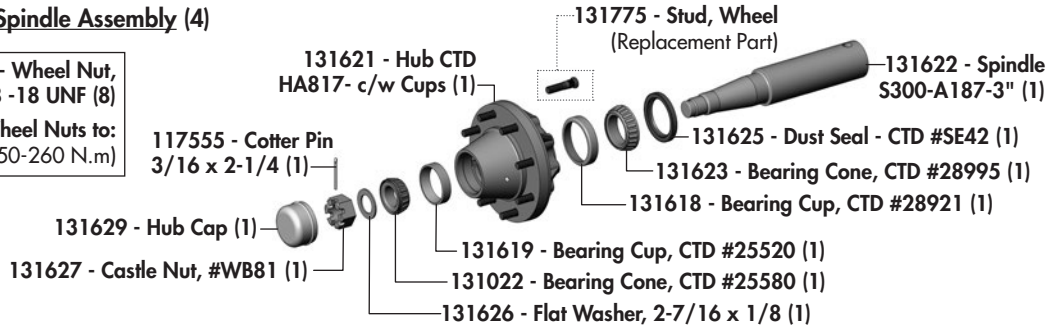

Wheel Cylinders

123195 - Cylinder, Monarch - 3 x 16 x 1-1/2 (2)

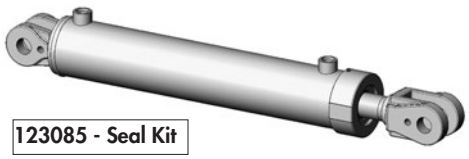

123085 - Seal Kit



Each Cylinder Requires:
- 117930 - Pin, 1 x 2-3/4 (2)
- 118924 - Flat washer, .59 ID x .9 OD (2)
- 118796 - Shoulder bolt, 1/2 GR8 UNC (2)

Hydraulic Layout - Transport Cylinder

Hydraulic Fittings Required

1	141581 - Coupler Tip, 3/4 ORB F	(2)
2	141703 - Adaptor, 1/2 ORB M x ORFS M	(2)
3	141830 - Coupler, Green (+)	(1)
4	141831 - Coupler, Green (-)	(1)
5	141704 - Elbow, 90° 1/2 ORB M x ORFS M	(2)

Required Hoses for Transport Cylinder

(269) 126892 - Hose, 3/8 x 269 (1)

(311) 126157 - Hose, 3/8 x 311 (1)

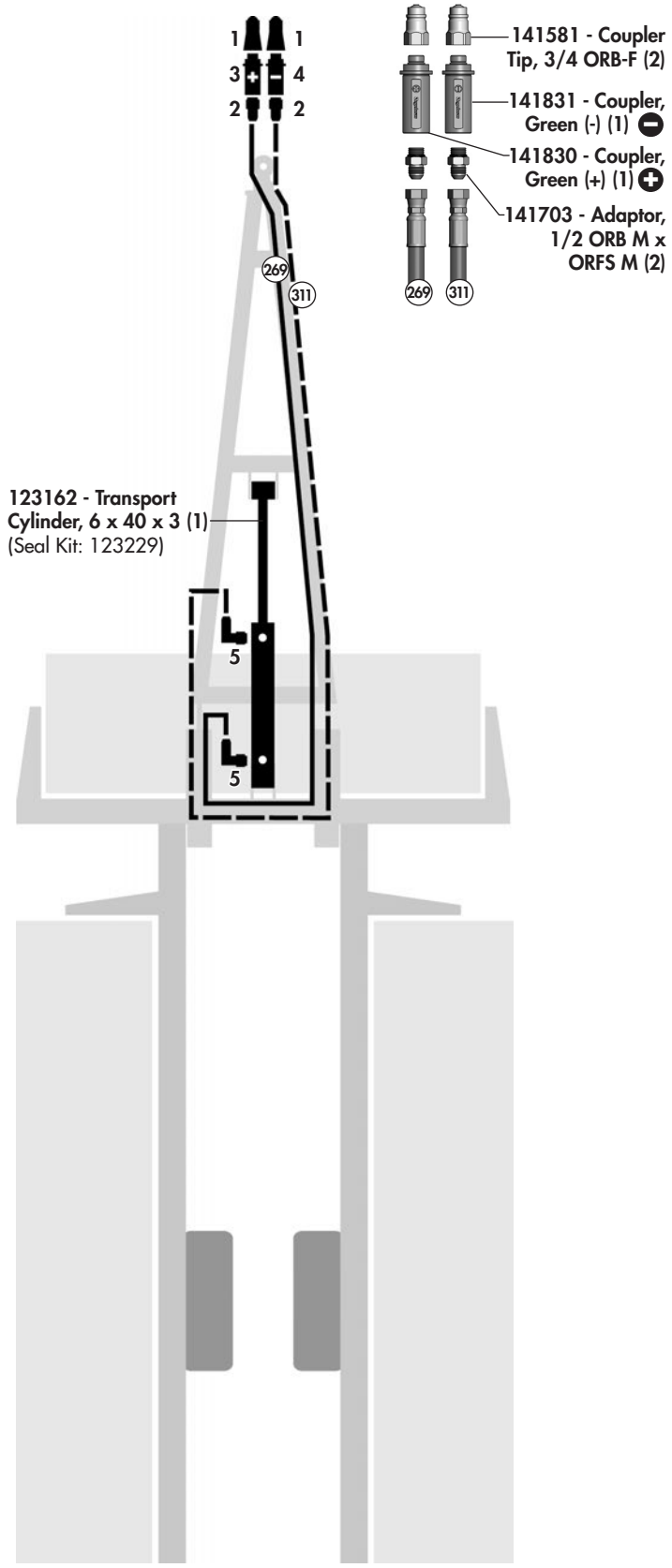

Hydraulic Layout - Wheel Cylinder

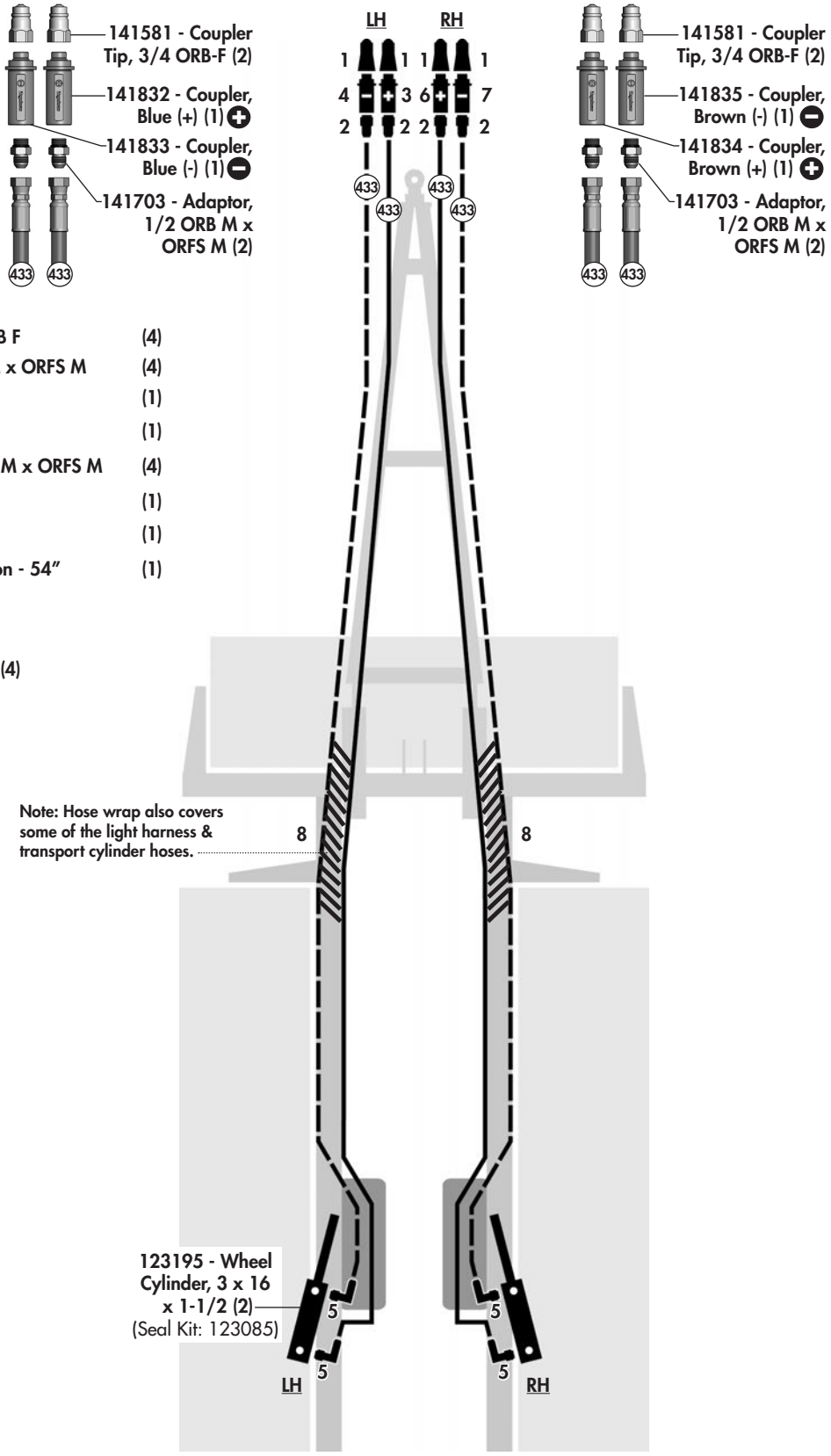

Hydraulic Fittings Required

1		141581 - Coupler Tip, 3/4 ORB F	(4)
2		141703 - Adaptor, 1/2 ORB M x ORFS M	(4)
3		141832 - Coupler, Blue (+)	(1)
4		141833 - Coupler, Blue (-)	(1)
5		141704 - Elbow, 90° 1/2 ORB M x ORFS M	(4)
6		141834 - Coupler, Brown (+)	(1)
7		141835 - Coupler, Brown (-)	(1)
8		249909 - Wrap, Hose Protection - 54"	(1)

Required Hoses for Wheel Cylinders

(433) 126146 - Hose, 3/8 x 433 (4)

Hydraulic Layout - Jack Cylinder

Hydraulic Fittings Required

1	141581 - Coupler Tip, 3/4 ORB F	(2)
2	141703 - Adaptor, 1/2 ORB M x ORFS M	(2)
3	141836 - Coupler, Black (+)	(1)
4	141837 - Coupler, Black (-)	(1)
5	141704 - Elbow, 90° 1/2 ORB M x ORFS M	(2)
6	141676 - Connector, 3/4 ORB M x M	(1)
7	141597 - Ball Valve - 3/4 ORB F	(1)
8	122668 - Orifice, 3/4-16 UNF	(1)

Required Hoses for Jack Cylinder

(128) 126145 - Hose, 3/8 x 128 (1)

(135) 126138 - Hose, 3/8 x 135 (1)

⚠ IMPORTANT:

Close the ball valve to prevent accidental operation of this circuit. Ensure ball valve handle remains in closed position.

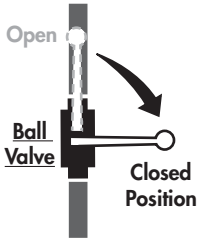

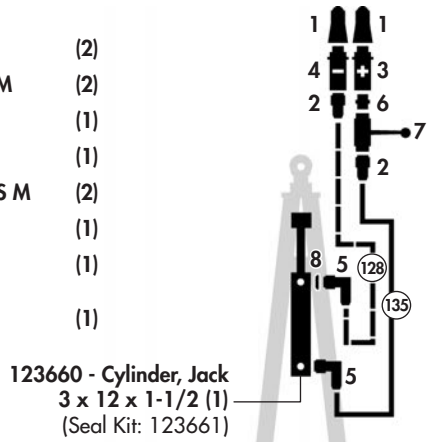

123660 - Cylinder, Jack 3 x 12 x 1-1/2 (1)
(Seal Kit: 123661)

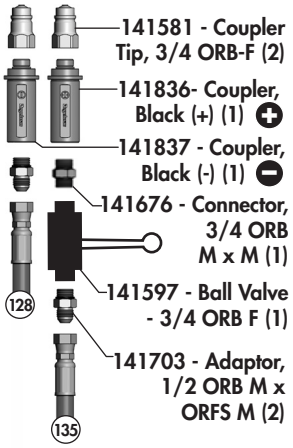

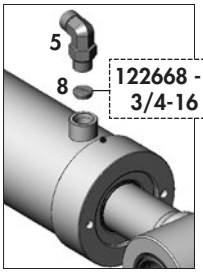

Electrical Routing

Light Wiring Harness Overview

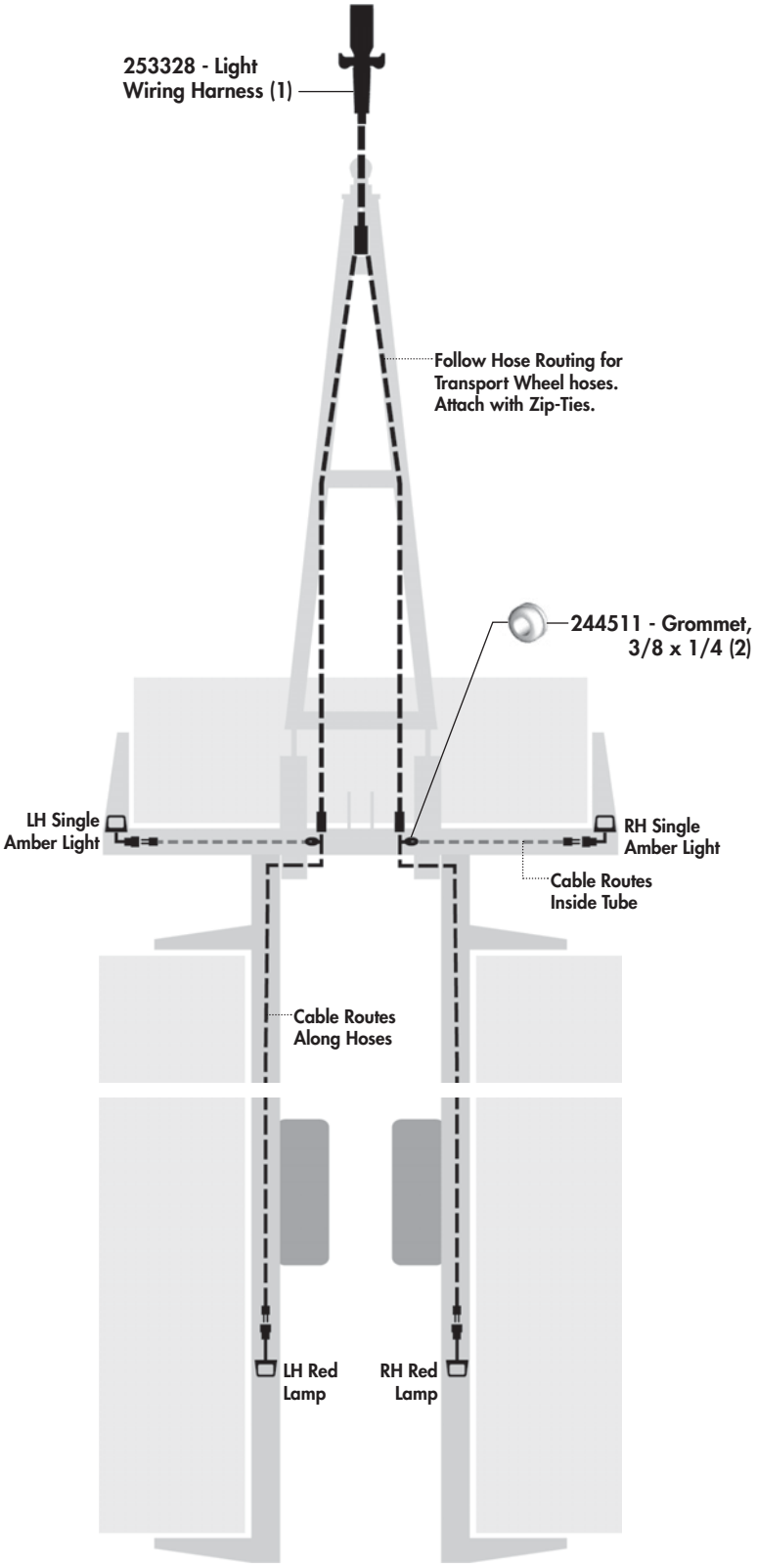

2 Year

Limited Warranty - Agricultural Products

Degelman Industries LP ("Degelman") warrants to the original purchaser of any new Degelman equipment, purchased from an authorized Degelman dealer, that the equipment will be free from defects in material and workmanship for a period of two (2) years from the date of delivery, for non-commercial use (including farm, institutional, government, and municipality) and (1) year from the date of delivery for commercial use. The obligation of Degelman to the purchaser under this warranty is limited to the repair or replacement of defective parts in the first year and to the provision, but not the installation of replacement parts in the second year. Degelman reserves the right to inspect any equipment or parts which are claimed to have been defective in material or workmanship.

This warranty limits its replacement or repair coverage to what is consistent with the warranty of Degelman's suppliers of purchased components.

Replacement or repair parts installed in the equipment covered by this limited warranty are warranted for ninety (90) days from the date of delivery of such part or the expiration of the applicable new equipment warranty period, which ever occurs later. Warranted parts shall be provided at no cost to the user at an authorized Degelman dealer during regular working hours. Warranted replacement parts will either be replaced or rebuilt at Degelman's discretion.

Disclaimer of implied warranties & consequential damages

This warranty shall not be interpreted to render Degelman Industries LP liable for injury, death, property damage or damages of any kind, whether direct, consequential, or contingent to property. Without limiting the generality of the foregoing, Degelman shall not be liable for damages resulting from any cause beyond its reasonable control, including, without limitation, loss of crops, any expense or loss of labour, supplies, rental machinery or loss of use.

No other warranty of any kind whatsoever, express or implied is made with respect to this sale; and all implied warranties of merchantability and fitness for a particular purpose which exceed the obligations set forth in this written warranty are hereby disclaimed and excluded from this sale. This exclusion shall not apply in any jurisdiction where it is not permitted by law.

This limited warranty shall not apply:

1. If, in the sole opinion of Degelman, the unit has been subjected to misapplication, abuse, misuse, negligence accident or incorrect off-site machine set-up.
2. To any goods that have sustained damage or deterioration attributable to a lack of routine maintenance (eg. Check and Re-torque of fastening hardware, Hydraulic fluid purities, drive train alignments, and clutch operation)
3. If parts not made or supplied by Degelman have been used in the connection with the unit, if, in the sole judgement of Degelman such use affects its performance, safety, stability or reliability.
4. If the unit has been altered or repaired outside of an authorized Degelman dealership in a manner which, in the sole judgement of Degelman, affects its performance, safety, stability or reliability.
5. To expendable or wear items such as (eg. Harrow tines, Rock Picker and Rock Rake wear teeth and replaceable bushings and pins.) and any other items that in the company's sole judgement are a wear item.

No employee or representative of Degelman Industries LP is authorized to change this limited warranty in any way or grant any other warranty unless such change is made in writing and signed by the Degelman Service Manager.

This limited warranty is subject to any future availability of supply, which may directly affect Degelman's ability to obtain materials or manufacture replacement parts.

Degelman reserves the right to make improvements in design or changes in specifications at any time, without incurring obligations to owners of equipment previously delivered.

This limited warranty is subject to compliance by the customer to the enclosed *Retail Customer's Responsibility Under Degelman Warranty.*

Warranty

Retail Customer's Responsibility Under Degelman Warranty.

It is the retail customer and/or Operator's responsibility to read the Operator's Manual, to operate, lubricate, maintain and store the equipment in accordance with all instructions and safety procedures. Failure of the operator to read the operators manual is a misuse of this equipment.

It is the retail customer and/or operators responsibility to inspect the product and to have any part(s) repaired or replaced when continued operation would cause damage or excessive wear to other parts or cause safety hazard.

It is the retail customer's responsibility to deliver the product to the authorized Degelman dealer, from whom he purchased it, for service or replacement of defective parts, which are covered by warranty. Repairs to be submitted for warranty consideration must be made within forty-five days of failure.

It is the Retail Customer's responsibility for any cost incurred by the dealer for hauling of the product for the purpose of performing a warranty obligation or inspection.

WARRANTY INFORMATION

Make certain the warranty registration card has been forwarded to:

Degelman Industries LP
Box 830 -272 Industrial Dr.
Regina, SK, Canada
S4P 3B1

Always give your dealer the serial number of your Degelman product when ordering parts or requesting service or other information.

The serial number is located on the machine as shown in the diagram below. In the space provided record the model number, the serial number and the date of purchase to assist your dealer in providing you with prompt and efficient service.

SERIAL NUMBER: _____

MODEL NUMBER: _____

DATE OF PURCHASE: _____



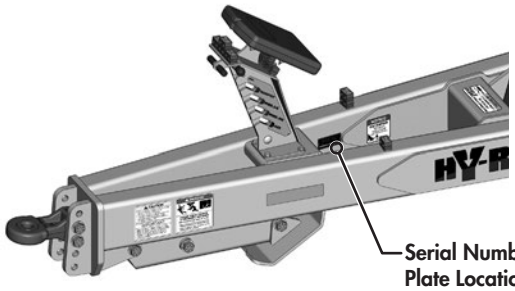

© 2026 Degelman Industries LP