Degelman

# OPERATOR & PARTS MANUAL

# PRO-TILL®

HIGH PERFORMANCE TILLAGE




PRO-TILL® 25
HIGH PERFORMANCE TILLAGE

*143588 v1.1*

**DEGELMAN INDUSTRIES LP**
BOX 830-272 INDUSTRIAL DRIVE,
REGINA, SK, CANADA, S4P 3B1
FAX 306.543.2140 PH 306.543.4447
**1.800.667.3545 DEGELMAN.COM**

## PRO-TILL 25/25HD

# QUICK-START GUIDE*
## for PRO-TILL 25/30/36

* Refer to operators manual for complete safety and operation info.

**REMEMBER!** You must complete **Product Registration** to be eligible for **Warranty.**

Degelman

## A Connect Hydraulics

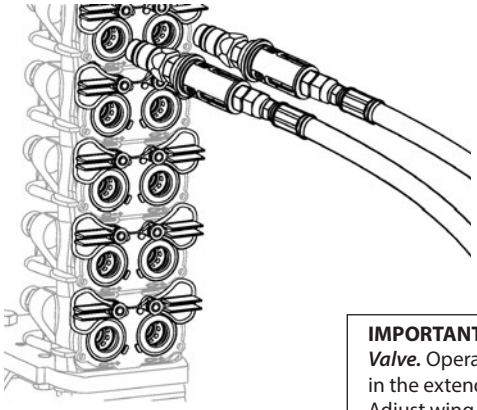

1. WHEELS
2. ROLLERS
3. TRANSPORT
4. WINGS
5. JACK

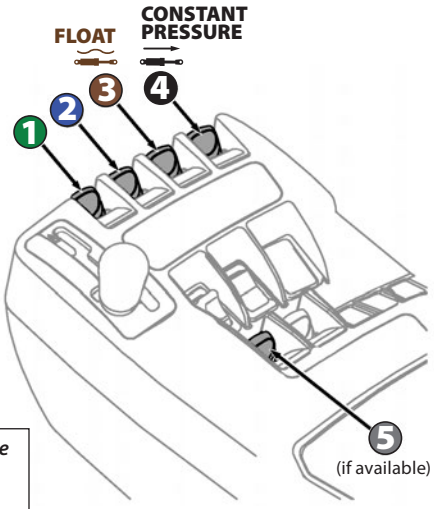


**IMPORTANT**: The ***Wing Cylinder Circuit*** includes a ***Down Pressure Valve.*** Operator must engage wing circuit hydraulics **constantly** in the extended direction to ensure constant down pressure. Adjust wing circuit flow down to 20-30% to reduce heat build-up.

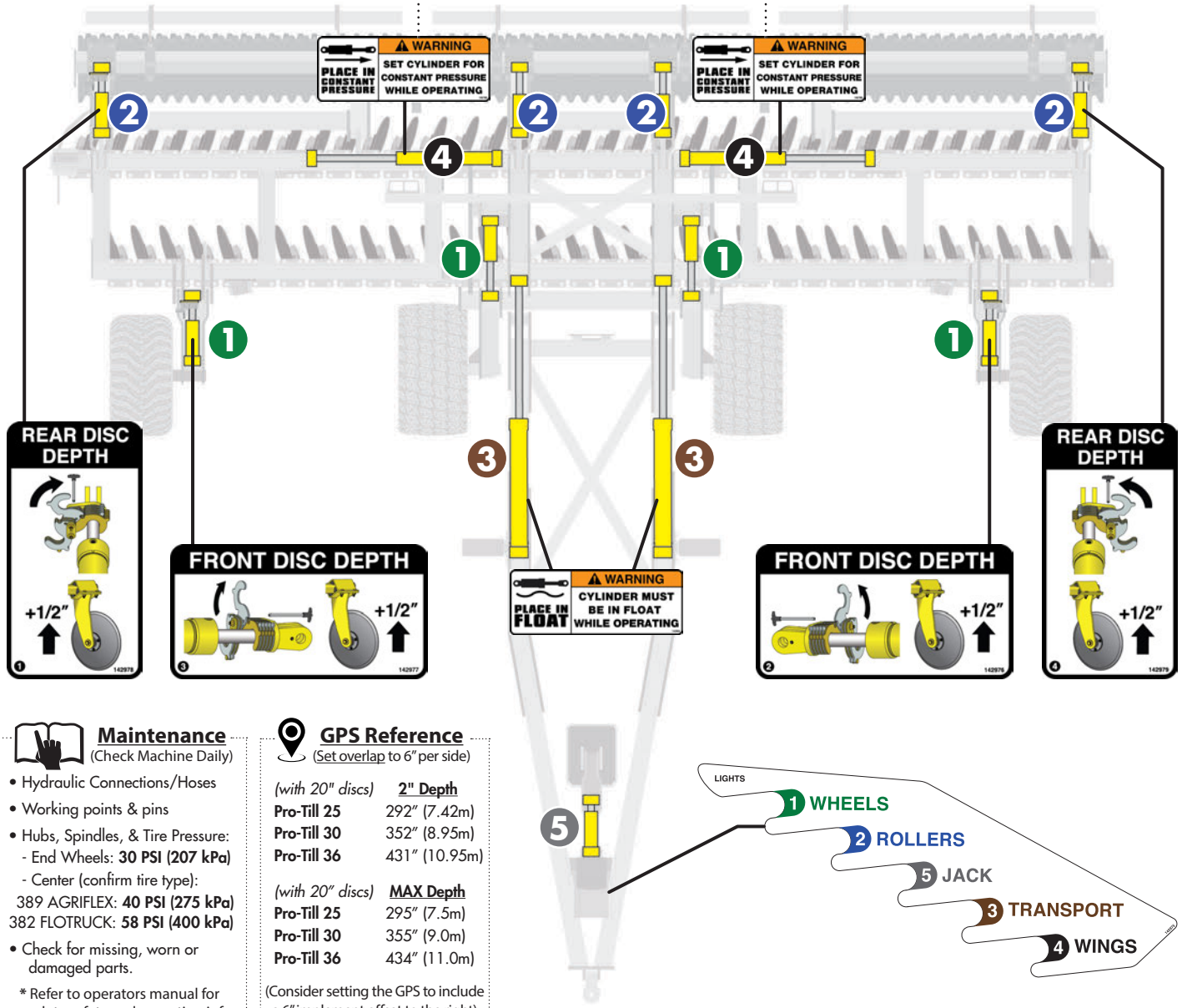


### Maintenance
(Check Machine Daily)

- Hydraulic Connections/Hoses
- Working points & pins
- Hubs, Spindles, & Tire Pressure:
  - End Wheels: **30 PSI (207 kPa)**
  - Center (confirm tire type):
  389 AGRIFLEX: **40 PSI (275 kPa)**
  382 FLOTRUCK: **58 PSI (400 kPa)**
- Check for missing, worn or damaged parts.

* Refer to operators manual for complete safety and operation info.

### GPS Reference
(Set overlap to 6" per side)

| *(with 20" discs)* | **2" Depth** |
|---|---|
| **Pro-Till 25** | 292" (7.42m) |
| **Pro-Till 30** | 352" (8.95m) |
| **Pro-Till 36** | 431" (10.95m) |

| *(with 20" discs)* | **MAX Depth** |
|---|---|
| **Pro-Till 25** | 295" (7.5m) |
| **Pro-Till 30** | 355" (9.0m) |
| **Pro-Till 36** | 434" (11.0m) |

(Consider setting the GPS to include a 6" implement offset to the right)




* Refer to operators manual for complete safety and operation info.

# B Put in Field Position

i)



**IMPORTANT**: The Pro-Till model shown may differ, but the general procedure remains the same. (*Pro-Till 40 shown)

ii)

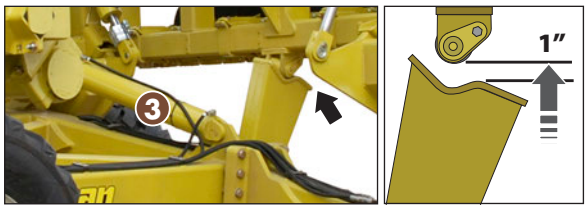


iii)

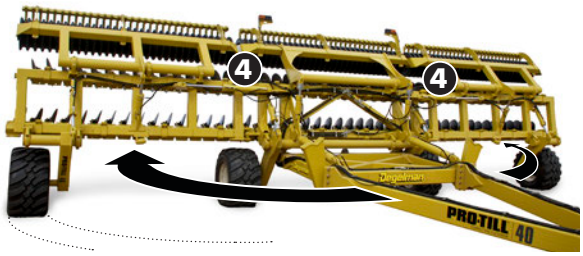


iv)

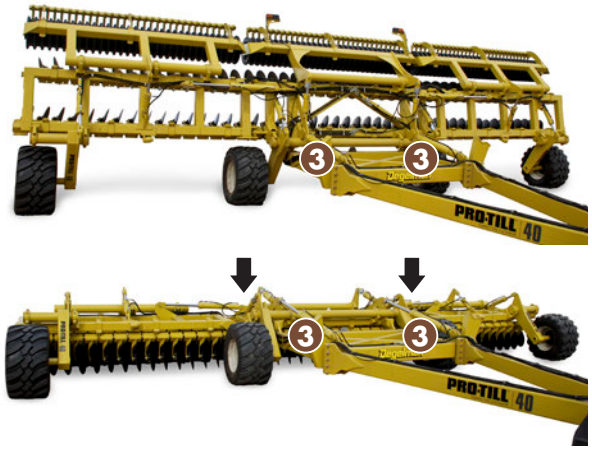


v)




**IMPORTANT**: Operator **must** read and understand the tractor manual in order to place the required hydraulic circuits into **float position** or **constant pressure position**.

# C Set Cutting Depth

**IMPORTANT**: Re-phase and cycle oil in the Depth Control Cylinders 1 2 before use. This is especially important after long periods of storage.

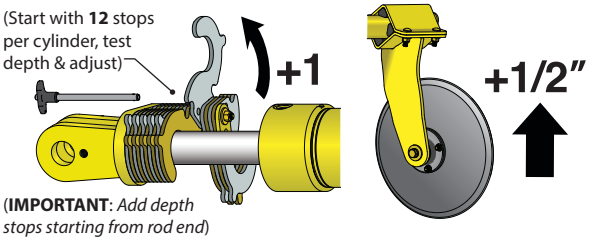


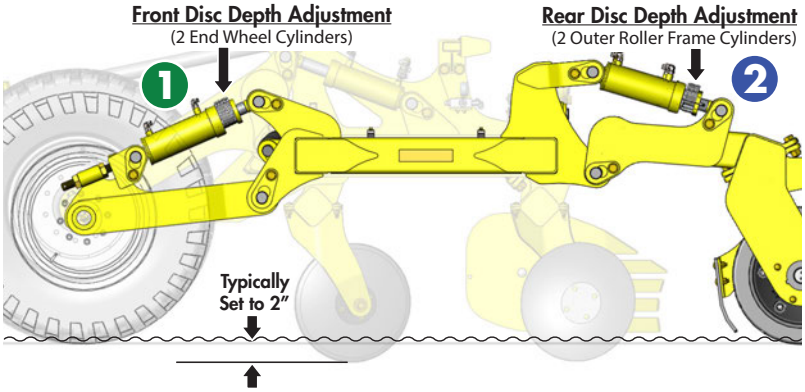


# D Test. Check. Adjust.

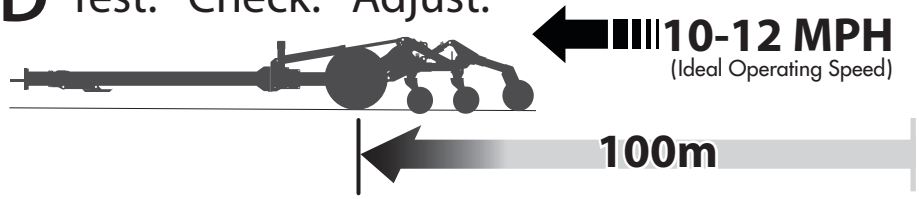


# E Lower 1 Wheels for Headland Turns.

# F ⚠ MAX Transport Speed: 40 km/h (25 MPH)

**Scraper Position Overview** (Rubber Rollers)

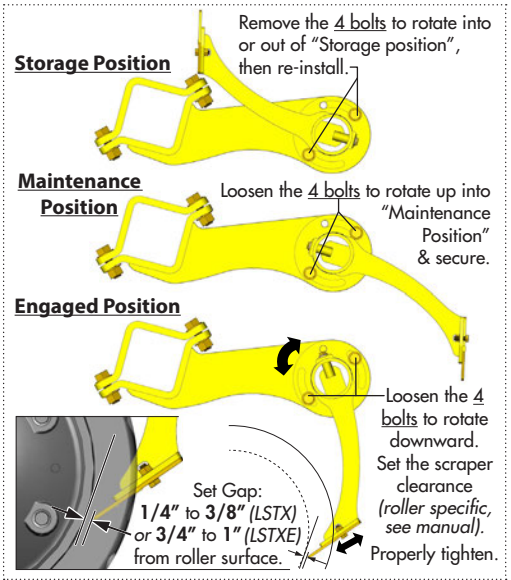




© 2026 Degelman Industries LP

Degelman

# PRO-TILL®

HIGH PERFORMANCE TILLAGE

**** Reference Sheet Quick-Start Guide***

## OPERATORS SECTION - TABLE OF CONTENTS


| | |
|---|---|
| ***IMPORTANT Safety Notice*** | |
| ***Introduction*** | ***1*** |
| ***Safety*** | ***2*** |
| ***Hook-Up*** | ***4*** |
| ***Transport*** | ***5*** |
| *Transport to Field Position* | *6* |
| *Field to Transport Position* | *7* |
| ***Operation*** | ***8*** |
| *Pre-Operation Checklist* | *8* |
| *Operation Guidelines / Suggestions* | *9* |
| *Setting Disc Depth* | *10* |
| *Ejector/Scraper Settings* | *12* |
| *Adjustments: Rephasing Cylinders* | *14* |
| ***Troubleshooting*** | ***15*** |
| ***Service & Maintenance*** | ***17*** |
| *Repair - Wheel Hub* | *20* |
| *Repair - Hyd Cylinder Repair* | *21* |
| *Repair - Pressed Bushing* | *22* |


**Maintenance Free Pins & Bushings**

**IMPORTANT:** *INSTALL DRY*



*Do NOT use any oil/grease/lubricant on pin or bushing surfaces when installing the maintenance free pins into composite bushings.*

## *PARTS SECTION* - TABLE OF CONTENTS


| | |
|---|---|
| *Pro-Till Section Overview* | *24* |
| *Hitch Pole Frame Components* | *25* |
| *Wheel & Rockshaft Components* | *27* |
| *Center Frame Components* | *28* |
| *End Wheel Components* | *29* |
| *Wing Frame Components* | *30* |
| *Disc Gang Assembly & Components* | *31* |
| *Disc Arm Components & Disc Options* | *33* |
| *Roller Mounting Frame Components* | *35* |
| *Roller & Ejector/Scraper Components* | *37* |
| *Hydraulic Routing & Cylinders* | *41* |
| *Light Routing* | *49* |
| ***Warranty*** | ***50*** |



**DEGELMAN INDUSTRIES LP**

BOX 830-272 INDUSTRIAL DRIVE,
REGINA, SK, CANADA, S4P 3B1
FAX 306.543.2140 PH 306.543.4447
**1.800.667.3545 DEGELMAN.COM**


**IMPORTANT:**



**READ MANUAL**

Degelman

# IMPORTANT SAFETY REMINDER

## ⚠ DANGER - NEVER PARK, UNHOOK, or SERVICE Pro-Till with REAR WINGS *RAISED*

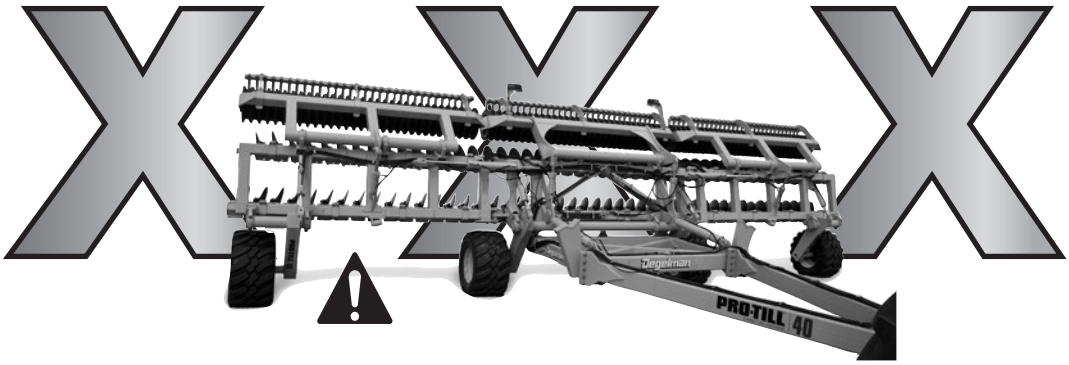





## ⚠ DANGER

If the front hitch becomes disconnected in this position the front hitch will raise suddenly and the back of the machine will drop!

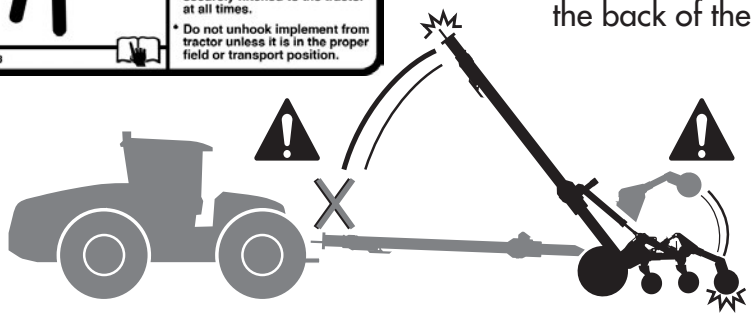




---

PRO-TILL®
HIGH PERFORMANCE TILLAGE

## CHANGING DISCS AND SERVICING

The best position to safely change or service the discs on the Pro-Till is when it is secured in the winged forward transport position.

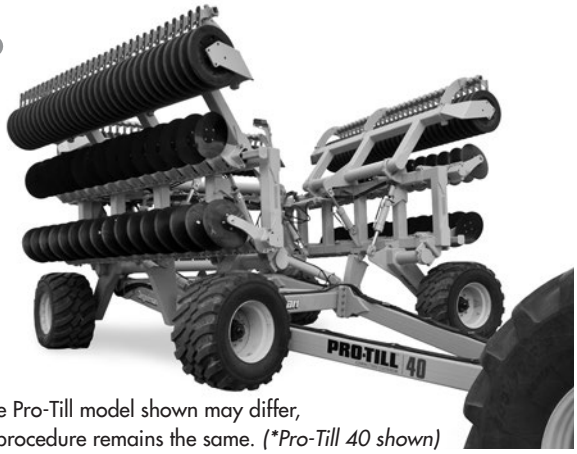


**IMPORTANT:** The Pro-Till model shown may differ, but the general procedure remains the same. *(*Pro-Till 40 shown)*

# Introduction

PRO-TILL®
HIGH PERFORMANCE TILLAGE

**CONGRATULATIONS** on your choice of a Degelman PRO-TILL to complement your farming operation. It has been designed and manufactured to meet the needs of a discerning agricultural market. Degelman PRO-TILL shreds heavy fall residue, opens up spring fields, levels ruts, destroys clods and produces an absolutely perfect seed bed. Degelman PRO-TILL is the fastest and most versatile piece of tillage equipment you will ever own. Use this manual as your first source of information about this machine.

**TO THE NEW OPERATOR OR OWNER** - Safe, efficient and trouble free operation of your Degelman PRO-TILL requires that you and anyone else who will be operating or maintaining it, read and understand the Safety, Operation, Maintenance and Troubleshooting information contained within this manual.

By following the operating instructions in conjunction with a good maintenance program your machine will provide many years of trouble-free service. Keep this manual handy for frequent reference and to pass on to new operators or owners. Call your Degelman Dealer if you need assistance, information, or additional copies of the manual.

**OPERATOR ORIENTATION** - The directions left, right, front and rear, as mentioned throughout the manual, are as seen from the tractor drivers' seat and facing in the direction of travel.

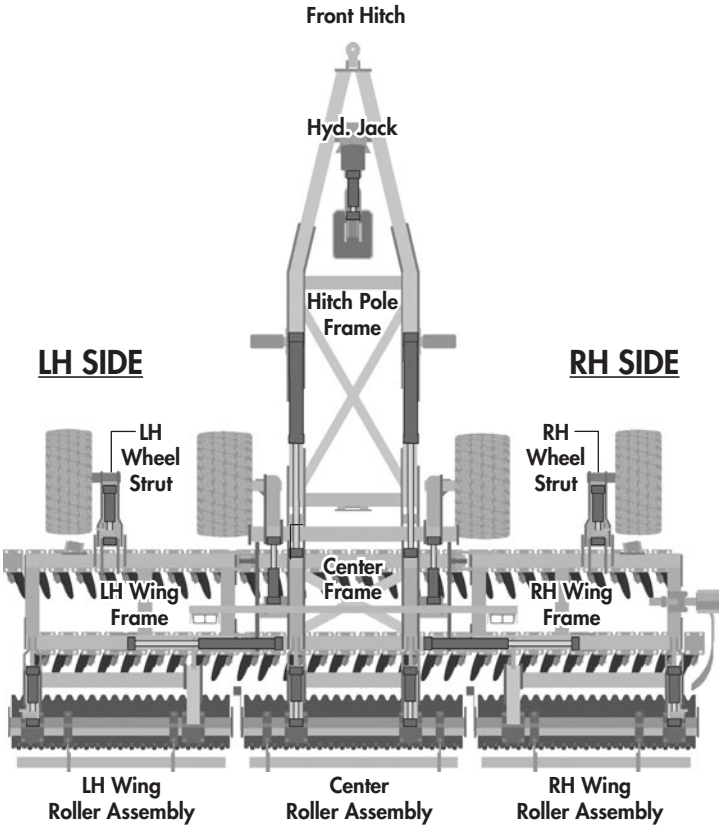


PRO-TILL® 25
HIGH PERFORMANCE TILLAGE

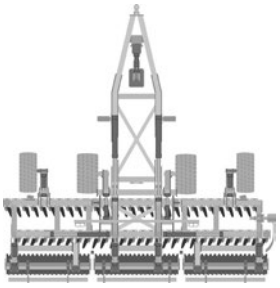

# Why is SAFETY important to YOU?

3 **BIG** Reasons:

- Accidents Can Disable and Kill
- Accidents Are Costly
- Accidents Can Be Avoided



## SAFETY ALERT SYMBOL

The **Safety Alert Symbol** identifies important safety messages applied to the PRO-TILL and in this manual. When you see this symbol, be alert to the possibility of **injury or death**. Follow the instructions provided on the safety messages.

The **Safety Alert Symbol** means:

**ATTENTION!**
**BECOME ALERT!**
**YOUR SAFETY IS INVOLVED!**

## SIGNAL WORDS

Note the use of the Signal Words: **DANGER**, **WARNING**, and **CAUTION** with the safety messages. The appropriate Signal Word has been selected using the following guidelines:

**DANGER**

**DANGER:** Indicates an imminently hazardous situation that, if not avoided, **WILL** result in death or serious injury if proper precautions are not taken.

**WARNING**

**WARNING:** Indicates a potentially hazardous situation that, if not avoided, **COULD** result in death or serious injury if proper precautions are not taken.

**CAUTION**

**CAUTION:** Indicates a potentially hazardous situation that, if not avoided, **MAY** result in minor or moderate injury if proper practices are not taken, or, serves as a reminder to follow appropriate safety practices.

## SAFETY

**YOU** are responsible for the safe operation and maintenance of your Degelman PRO-TILL. **YOU** must ensure that you and anyone else who is going to operate, maintain or work around the PRO-TILL be familiar with the operating and maintenance procedures and related **SAFETY** information contained in this manual. This manual will take you step-by-step through your working day and alerts you to all good safety practices that should be adhered to while operating this equipment.

Remember, **YOU** are the key to safety. Good safety practices not only protect you but also the people around you. Make these practices a working part of your safety program. Be certain that **EVERYONE** operating this equipment is familiar with the recommended operating and maintenance procedures and follows all the safety precautions. Most accidents can be prevented. Do not risk injury or death by ignoring good safety practices.

- PRO-TILL owners must give operating instructions to operators or employees before allowing them to operate the PRO-TILL, and at least annually thereafter per OSHA regulation 1928.51.
- The most important safety device on this equipment is a SAFE operator. It is the operator's responsibility to read and understand ALL Safety and Operating instructions in the manual and to follow these. All accidents can be avoided.
- A person who has not read and understood all operating and safety instructions is not qualified to operate the machine. An untrained operator exposes himself and bystanders to possible serious injury or death.
- Do not modify the equipment in any way. Unauthorized modification may impair the function and/or safety and could affect the life of the equipment.
- Think SAFETY! Work SAFELY!

## GENERAL SAFETY

1. Read and understand the Operator's Manual and all safety signs before operating, maintaining or adjusting.



2. Install and properly secure all shields and guards before operating. Use hitch pin with a mechanical locking device.
3. Have a first-aid kit available for use should the need arise and know how to use it.



4. Have a fire extinguisher available for use should the need arise and know how to use it.



5. Wear appropriate protective gear. This list includes but is not limited to:
   - A hard hat
   - Protective shoes with slip resistant soles
   - Protective glasses or goggles
   - Heavy gloves
   - Wet weather gear
   - Hearing protection
   - Respirator or filter mask

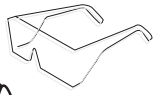



6. Clear the area of people, especially small children, and remove foreign objects from the machine before starting and operating.
7. Do not allow riders.
8. Stop tractor engine, set park brake, remove ignition key and wait for all moving parts to stop before servicing, adjusting, repairing or unplugging.
9. Review safety related items with all operators annually.

## HOOK-UP / UNHOOKING

The PRO-TILL should always be parked on a level, dry area that is free of debris and foreign objects. Follow this procedure to hook-up:

1. Clear the area of bystanders and remove foreign objects from the machine and working area.
2. Make sure there is enough room to back the tractor up to the trailer hitch.
3. Start the tractor and slowly back it up to the hitch point.
4. Connect the hydraulics. To connect, proceed as follows:

- Use a clean cloth or paper towel to clean the couplers on the ends of the hoses. Also clean the area around the couplers on the tractor. Remove the plastic plugs from the couplers and insert the male ends.
- Be sure to match the pressure and return line to one valve bank.
- Hoses have been labelled in a suggested order of priority from most used to least: (1) Wheels (2) Rollers (3) Transport (4) Wings (5) Jack

5. Use the hydraulic jack controls to raise or lower the hitch to align with the drawbar.

   ⚠ **IMPORTANT:** Close the ball valve (if equipped) to prevent accidental operation of this circuit. Ensure ball valve handle remains in closed position.

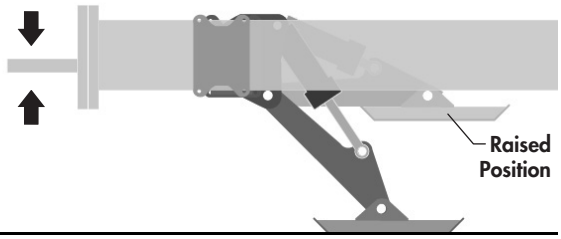


⚠ **WARNING:** *Tractor **MUST** be equipped with a clevis hitch to prevent unit from tipping upward while folding into and out of transport. A safety chain must also always be properly installed.*

6. Slowly back tractor up to align the hitch.
7. Install a drawbar pin with provisions for a mechanical retainer such as a KLIK pin. Install the retainer.
8. Install a safety chain between the tractor and the hitch.
9. Connect lights (electrical socket plug) to tractor.
10. Raise the hydraulic hitch jack.
11. When unhooking from the tractor, reverse the above procedure.

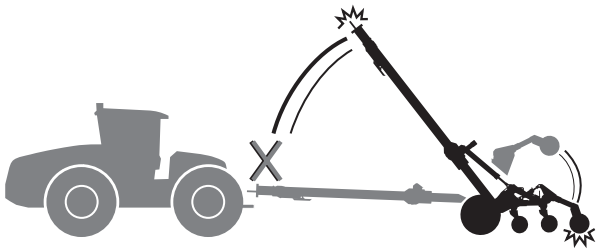

⚠ **WARNING/DANGER:**

***Never*** *disconnect Pro-Till from tractor if rear sections of machine are partially raised.*

***Negative Hitch Weight*** *may result, the hitch pole may suddenly raise, and the rear section would come crashing down. Only disconnect when unit is on level ground in the proper transport or field position.*







⚠ **WARNING/DANGER:**

*The tractor **MUST** be properly equipped with a clevis hitch and safety chain to prevent **Negative Hitch Weight** occurring when raising or lowering the rear sections.*

*If the unit is not properly attached to the tractor with a clevis hitch and safety chain, the negative hitch weight could result in the hitch pole suddenly raising and the rear section to come crashing down.*

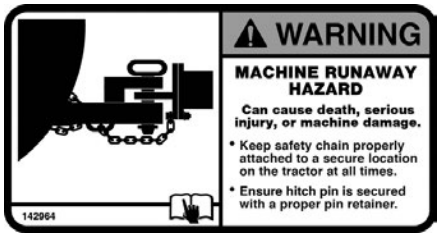

# Transport

## TRANSPORT SAFETY

1. Read and understand ALL the information in the Operator's Manual regarding procedures and SAFETY when operating the PRO-TILL in the field/yard or on the road.
2. Check with local authorities regarding machine transport on public roads. Obey all applicable laws and regulations.
3. Always travel at a safe speed. Use caution when making corners or meeting traffic.
4. Make sure the SMV (Slow Moving Vehicle) sign, and all the lights and reflectors that are required by the local highway and transport authorities are in place, are clean and can be seen clearly by all overtaking and oncoming traffic. Be sure to check with local highway authorities and comply with their lighting and transport requirements.
5. Keep to the right and yield the right-of-way to allow faster traffic to pass. Drive on the road shoulder, if permitted by law.
6. Always use hazard warning flashers on tractor when transporting unless prohibited by law.
7. Always use a pin with provisions for a mechanical retainer and a safety chain when attaching to a tractor or towing vehicle.

## TRANSPORTING

*Use the following guidelines while transporting the* PRO-TILL*:*

1. Use a safety chain and a pin with provisions for a mechanical retainer.

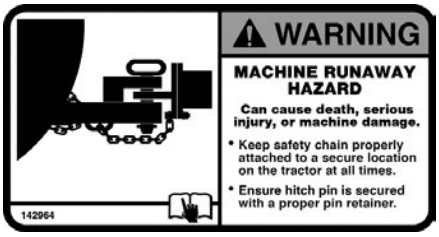


2. Ensure Pro-Till is in the full transport position with the wing rollers secure and properly in place.
3. Ensure debris that may fall or become dislodged during transport is removed.
4. Be sure hazard lights are flashing and SMV decal is visible.
5. MAXIMUM RECOMMENDED TRANSPORT SPEED: **MAX 40 km/h** or **25 mph**. (Road Conditions, Field speeds may be lower.)

   Due to weight of the machine and tire ratings, do not exceed the recommended maximum speeds or severe tire damage / excessive wear may occur.
6. If the Pro-Till is to be towed in Transport for an extended duration with speeds up to 40km/hr, the centre frame wheels (transport tires) must be checked and properly inflated.

   **Extended Transport Duration Inflation Rates**:
   389 AGRIFLEX+: 560/60 R22.5: **58 PSI** (400 kPa)

   **Standard Field Operation Inflation Rates:**
   389 AGRIFLEX+: 560/60 R22.5: **40 PSI** (275 kPa)

⚠ **IMPORTANT:** *Under NO CIRCUMSTANCES should there ever be riders while the Pro-Till is in transport.*



# Transport to Field Position Overview

## TRANSPORT TO FIELD POSITION

### FOLLOW PROCEDURE BELOW:

**IMPORTANT:** The Pro-Till model shown may differ, but the general procedure remains the same.
*(*Pro-Till 40 shown)*



A. On level ground, position the PRO-TILL so it is straight in-line behind the tractor.

B. **Slightly** extend the Transport Cylinders (#3) just enough to remove the weight of wings off from the wing transport carriers. Do not lift more than needed.

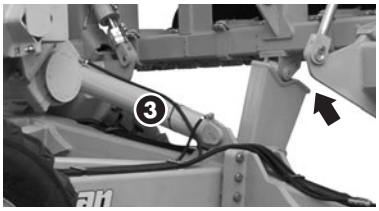


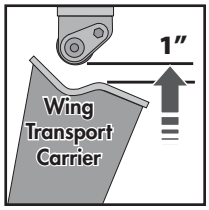


⚠ **IMPORTANT:** ***Do Not*** *fully extend the transport cylinders at this point. Follow proper procedures to prevent possible equipment damage or failure.*

C. Extend the Wing Cylinders (#4) to fully open the wings behind the machine.

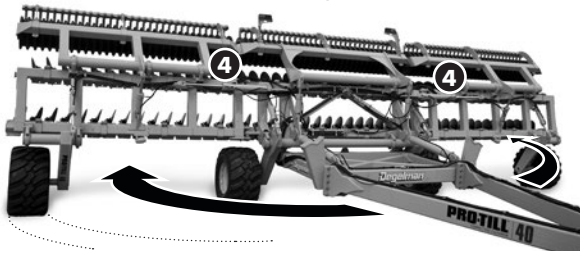


**⚠ NEVER LIFT WINGS!**

Unfold using the **Wing Cylinders (4)**, *then* lower all rear sections using the **Transport Cylinders (3)**.

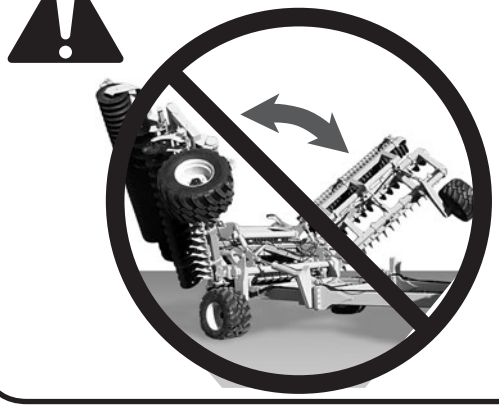

(**IMPORTANT**: The Pro-Till model design may vary, but the general procedure remains the same. *Pro-Till 40 shown.)

D. After fully opening the wings, extend the Transport Cylinders (#3) to completely lower all the PRO-TILL rear frame sections to the ground.

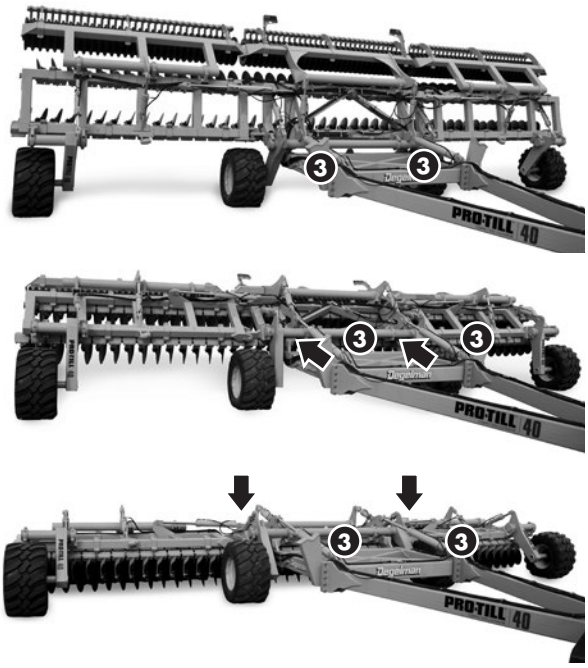


E. Place the Transport Cylinders (#3) into FLOAT position before operation.

⚠ **IMPORTANT:** *The **Transport** Cylinders **MUST** be in the "**FLOAT**" position in order for the PRO-TILL to properly contour the ground and to avoid possible cylinder or equipment damage.*







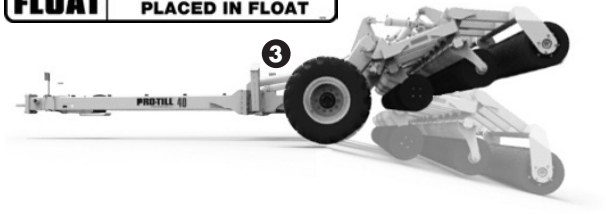


F. Wing Cylinders (#4):




During operation, the wing circuit hydraulics need to be engaged **constantly** from the tractor, in the extended direction. This will ensure constant down pressure is applied to the wings and the machine can still contour over uneven terrain effectively.
(*Refer to your tractor's manual for proper procedures.*)

# Field to Transport Position Overview

## FIELD TO TRANSPORT POSITION

### FOLLOW PROCEDURE BELOW:

**IMPORTANT:** The Pro-Till model shown may differ, but the general procedure remains the same. *(*Pro-Till 40 shown)*




A. Fully extend the Wheel & Roller Cylinders (#1 & #2) to completely raise the **disc frames**.



**NOTE:** *It is important to fully raise the disc frames up as high as possible as it puts the rollers and wheels in the correct position for low transport.*

B. Retract the Transport Cylinders (#3), fully raising the **complete rear section** (center & both wing sections).

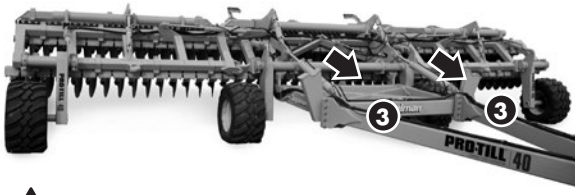


⚠ **IMPORTANT:** ***Do Not*** *retract the wing cylinders to raise the wings at this point. Follow proper procedures to prevent possible equipment damage or failure.*

**⚠ NEVER LIFT WINGS!**

Lift rear sections using the **Transport Cylinders (3)**, *then* fold the wings forward using the **Wing Cylinders (4).**

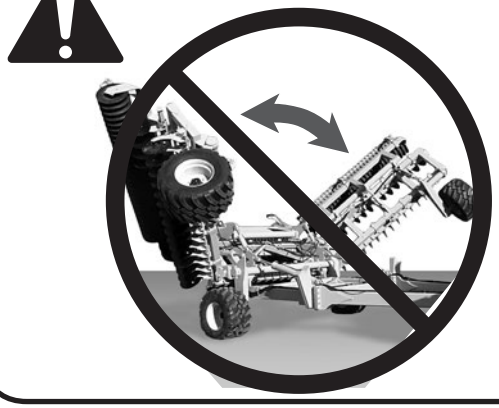

C. After raising all the rear sections together, retract the Wing Cylinders (#4) to bring both wings inward towards the frame.

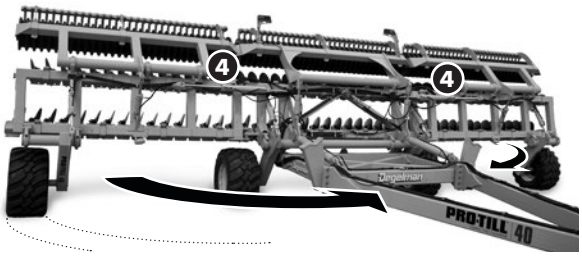





D. When the wings get close to the wing transport carriers, you may need to *slightly* extend the Transport Cylinders (#3) so the rollers can reach the correct position.

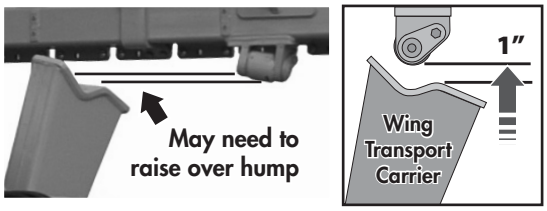


E. With the wings in the proper position, retract the Transport Cylinders (#3) fully lowering the wings onto the wing transport carriers.

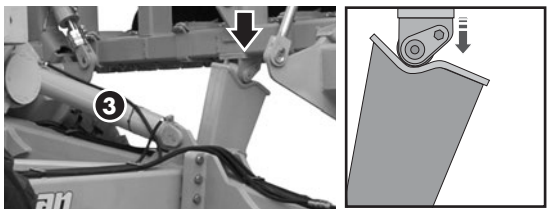

## OPERATING SAFETY

1. Read and understand the Operator's Manual and all safety signs before using.
2. Stop tractor engine, set park brake, remove ignition key and wait for all moving parts to stop before servicing, adjusting, repairing or unplugging.
3. Keep hands, feet, hair and clothing away from all moving and/or rotating parts.




4. Do not allow riders on the PRO-TILL tractor during operation or transporting.
5. Keep all shields and guards in place when operating (if applicable).
6. Clear the area of all bystanders, especially children, before starting.
7. Do not operate machine on overly steep side hills or slopes.
8. Be careful when working around or maintaining a high-pressure hydraulic system. Ensure all components are tight and in good repair before starting.

## BREAK-IN

Although there are no operational restrictions on the PRO-TILL when it is new, there are some checks that should be done when using the machine for the first time, follow this procedure:

⚠ **IMPORTANT:** *It is important to follow the Break-In procedures especially those listed in the "Before using" section below to avoid damage:*

**A.** Before using:

1. Read Safety Info. & Operator's Manual.
2. Complete steps in "Pre-Operation Checklist".
3. Lubricate all grease points.
4. Check all bolt tightness.
5. Confirm Ridge Wipers are installed in proper position after shipping and adjusted.
6. Adjust Disc Cutting Depth as outlined in the "Setting Disc Depth" section.

**B.** After operating for 2 hours:

1. Check all hardware. Tighten as required.
2. Check all hydraulic system connections. Tighten if any are leaking.

## PRE-OPERATION CHECKLIST

It is important for both personal safety and maintaining good operational condition of the machine that the pre-operational checklist be followed.

**Before operating the machine and each time thereafter, the following areas should be checked off:**

1. Lubricate the machine per the schedule outlined in the "Maintenance Section".
2. Use only a tractor with adequate power to pull the PRO-TILL under ordinary operating conditions.

   **NOTE:** *It is important to pin the drawbar in the central location only.*

3. Ensure that the machine is properly attached to the tractor using a clevis hitch, safety chain and a drawbar pin with provisions for a mechanical retainer. Make sure that a retainer such as a Klik pin is installed.

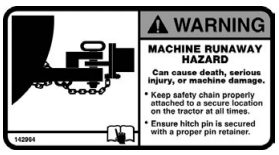


⚠ **WARNING:** ***Negative Hitch Weight*** *may occur when raising or lowering the rear sections. If the unit is not properly attached to the tractor with a clevis hitch and safety chain, the negative hitch weight could result in the hitch pole to suddenly raise and the rear sections to come crashing down.*







4. Before using, inflate tires to:

   End Wheel Tires: **40 PSI (275 kPa)**

   Center/Transport Tires (confirm tire type):
   389 AGRIFLEX+: 560/60 R22.5: **40 PSI (275 kPa)**

5. Check oil level in the tractor hydraulic reservoir. Top up as required.
6. Inspect all hydraulic lines, hoses, fittings and couplers for tightness. Tighten if there are leaks. Use a clean cloth to wipe any accumulated dirt from the couplers before connecting to the tractor's hydraulic system.
7. Inspect the condition/wear of the discs. If needed or desired, adjust the Disc Cutting Depth as outlined in the adjustments section. If excessive disc wear is evident, replacement may be required. Refer to maintenance section.

## OPERATING GUIDELINES

1. Re-phase and cycle oil in the Depth Control Cylinders (Wheels #1 and Rollers #2) before use. This is especially important after long periods of storage.

2. Place the Transport Cylinders (#3) into the FLOAT position before operation.




⚠ **IMPORTANT:** *The Transport Cylinders* **MUST** *be in the* ***FLOAT*** *position for the PRO-TILL to contour properly and to avoid possible cylinder or equipment damage.*




⚠ **IMPORTANT:** *Operator* **must** *read and understand the tractor manual in order to place the required hydraulic circuits into* ***float position****.*

3. Wing Cylinders (#4): During operation, the wing circuit hydraulics need to be engaged **constantly** from the tractor, in the extended direction. This will ensure constant down pressure is applied to the wings and the machine can still contour over uneven terrain effectively.




⚠ **IMPORTANT:** *Operator* **must** *read and understand the tractor manual in order to place the required hydraulic circuits into* ***constant pressure position,*** *in the correct direction. Adjust wing circuit flow down to 20-30% to reduce heat build-up.*

4. **IDEAL OPERATING SPEED** is 10-12 mph.
   ***Minimum*** operating speed is 8 mph.
   ***Maximum*** operating speed is 14 mph.

5. When making headland turns, the operator may wish to slightly raise the disc sections by activating the Wheel (#1) or Roller (#2) cylinders (or both). Remember to lower after coming out of the turn.

6. Each time you start a new field you may need to adjust the cutting depth depending on the type of crop residue or soil conditions. The operator can adjust the cutting depth by raising/lowering the front or rear sets of discs by following the guidelines in the "Setting Disc Depth" section.

7. After making adjustments to the cutting depth it is recommended to bring the Pro-Till up to speed (10-12mph) to test the depth setting by driving about 100m (cutting performance changes dramatically from a slow speed to high speed). Stop, check depth and cut of field, re-adjust the height higher or lower, if needed, based on your preference. Remember: Removing a 1/4" stop lowers cutting depth 1/2" deeper, Adding a 1/4" stop raises discs up 1/2" higher.

8. Harder, packed soil may require additional passes for optimum results. It is recommended to do a second pass at an angle to the original pass.

## FACTORY DISC SETUP — PRO-TILL 25

### 20" DISC SETUP

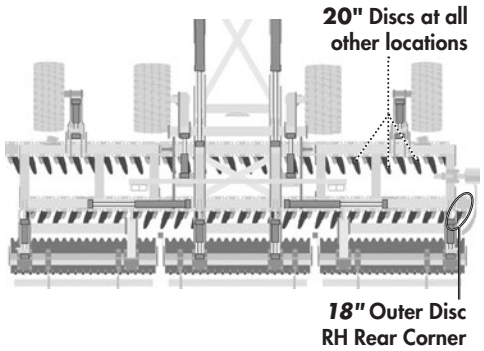


### 22" DISC SETUP

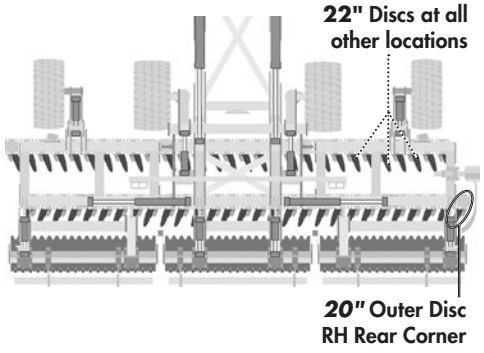


### 26" DISC SETUP

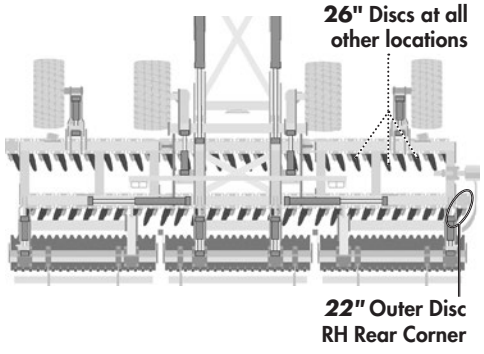

## SETTING DISC DEPTH - FRONT AND REAR

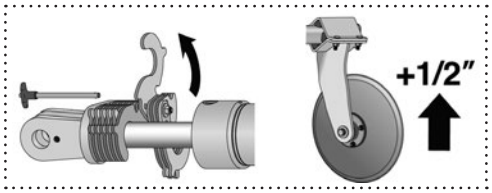


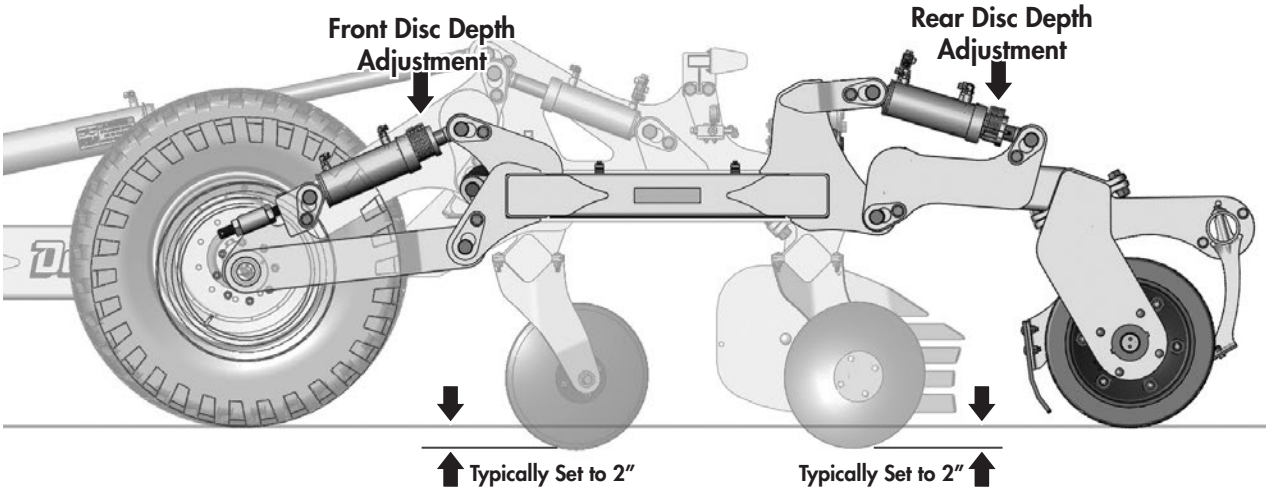


**DEPTH SETTING OVERVIEW**

Adjusting the cutting depth of the front and rear discs is accomplished by adding or removing a number of spacers from specified cylinders.

The spacers limit the stroke distance of the cylinders, changing the amount that the front and rear of the disc frames are lowered.

Each spacer that is added to the cylinders raises the frame height by 1/2". Therefore, to lower discs deeper into the soil, you would remove *one* spacer for *each* 1/2" of depth change required.

A typical recommended penetration depth of 2" is suggested for both front and rear discs. This depth, however, can be adjusted to the operators needs and preferences or based on different crop varieties and soil conditions.

Some operators may also prefer to adjust the front or rear frame disc sections to run slightly higher than the other. Adjustments to the front or rear disc sections are done individually:

• Adjust the front disc height by adding/removing spacers to the two outer wing end wheel cylinders.

• Adjust the rear disc height by adding/removing spacers to the two outer rear wing roller cylinders.

**NOTE:** *As the discs wear with usage, the disc depth settings will also need to be adjusted accordingly.*

*Use the following as a guideline for setting depth:*

1. Drive the PRO-TILL onto level ground. For initial setup, try **"12 Spacers"** on each cylinder stop.
2. Fully retract the Wheel (#1) and Roller (#2) cylinders to lower rear frame to ground.
3. Check the penetration depth of the front and rear row of discs. Take note of how much you would like to raise or lower both the front and rear disc sections - round to the nearest 1/2".
4. Fully raise the frame back off the ground by extending the Wheel (#1) and Roller (#2) cylinders.
5. Adjust Front Disc height at the two outer wing end wheel cylinder positions.

   **Lower Front Discs** - **Remove one spacer** for each **1/2"** you want to **Lower** it.

   **Raise Front Discs** - **Add one spacer** for each **1/2"** you want to **Raise** it.
6. Adjust Rear Disc height from the two outer wing roller cylinders positions.

   **Lower Rear Discs** - **Remove one spacer** for each **1/2"** you want to **Lower** it.

   **Raise Rear Discs** - **Add one spacer** for each **1/2"** you want to **Raise** it.
7. Repeat above procedure until proper depth is achieved.

## WING FRAME OUTER END ADJUSTMENT

Some operators may prefer to adjust the outer wing frame corner depth if they find that it is running deeper or shallower than the level of the center frame. There is a threaded rod on the End Wheel Cylinder (both LH and RH sides) that will allow adjustments to this height:

- Lengthening adjustment rod length:
  - Raises the outer wing
- Shortening adjustment rod length:
  - Lowers the outer wing

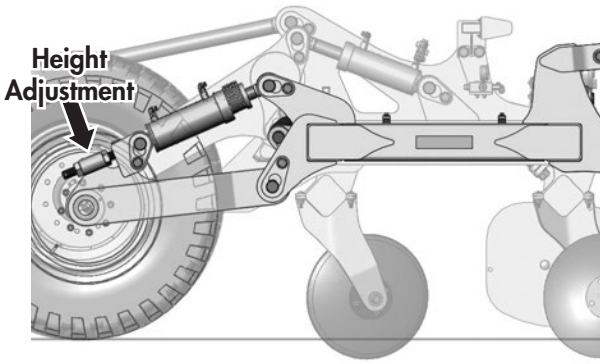


## PROCEDURE TO SET DEFLECTOR HEIGHT:

⚠ **IMPORTANT:** *You may need to adjust the deflector height according to soil penetration. Best setting is when deflector runs just slightly above the ground.*

The following is a recommended procedure to set the height of the dirt deflector:

1 - Run the machine with discs set to the proper depth.

2 - Stop the machine.

3 - Adjust the height so the deflector is running just slightly above the ground.

## 6-WAY DIRT DEFLECTOR ADJUSTMENT

The main purpose of the Dirt Deflector is to fill the furrow caused by the right rear disc by capturing, & containing some of the dirt flow from the right front disc & redistributing it. The Dirt Deflector can be adjusted in six directions to enable optimum performance & operator preference.

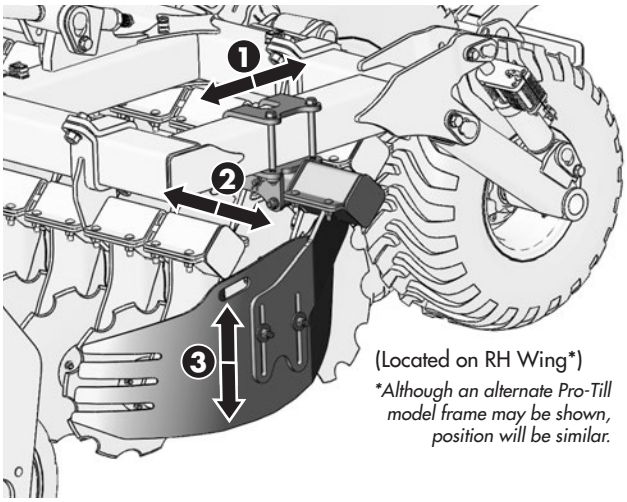


(Located on RH Wing*)

**Although an alternate Pro-Till model frame may be shown, position will be similar.*

❶ To maintain optimum dirt placement while operating at higher speeds, the entire Dirt Deflector assembly could be moved rearward. Inversely, for slower speeds, the entire Dirt Deflector assembly may need to be moved forward.

❷ The operator may wish to adjust the arm distance depending on the disc option, frame pitch settings and soil conditions. For example, if the deflector is plugging or restricting the flow of dirt and trash, you may wish to move the deflector arm outward.

❸ When cutting deep, the operator should move the deflector plate upward to avoid dragging high volumes of dirt & smearing the ground.

**NOTE:** *You may need to adjust the deflector height according to soil penetration. Best setting is when deflector runs just slightly above the ground.*

## DISENGAGING THE DIRT DEFLECTOR

The quickest way to disengage the *Dirt Deflector* is to:

- Loosen the two deflector adjustment bolts
- Fully raise the deflector plate to the top of the adjustment slot.
- Then retighten the bolts.

*Optional:*

The Dirt Deflector Assembly may be removed & stored.

## ADJUSTING WING DOWN PRESSURE

The purpose of the wing pressure valve is to provide constant down pressure to the wings of the Pro-Till in order to reduce the likelihood of the "Resonance" or "Bounce" issue occurring. It also transfers some of the weight of the heavier center frame out towards the wings for a more even field finish and consistent tillage depth.



To Adjust:

Apply constant down pressure to the wing circuit using the tractor hydraulics. Verify that the pressure gauge reads around 900psi.

If the pressure reads higher or lower than 900psi (+/- 50psi) it may require adjustment.

****DO NOT EXCEED 1300 PSI****



With the circuit still under pressure, loosen the lock nut (14mm) for the adjustment screw on the pressure reducing/relieving valve cartridge.



Using an allen key, adjust set screw clockwise to raise pressure or counter-clockwise to reduce it until the gauge reads the proper pressure setting.

Re-tighten lock nut.

**Note:** Future adjustment of this screw may be necessary for different field conditions and working depths.

## ROCK EJECTOR POSITION OVERVIEW - LSTXE

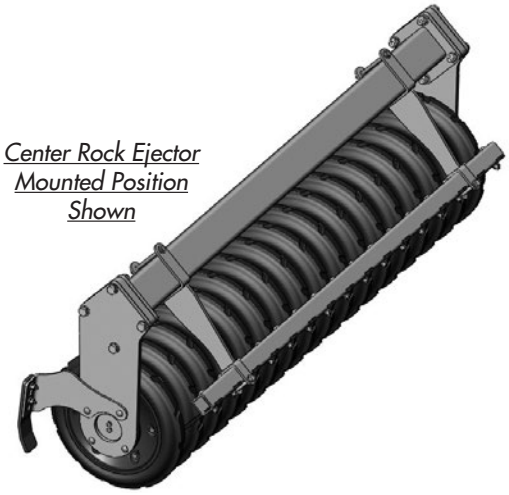

*Center Rock Ejector Mounted Position Shown*

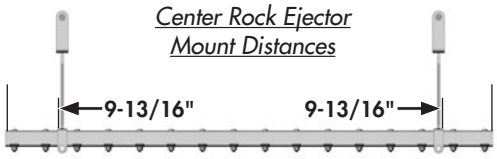


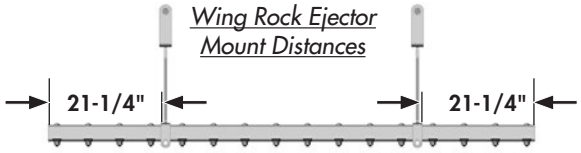


## INDIVIDUAL EJECTOR ADJUSTMENT - LSTXE

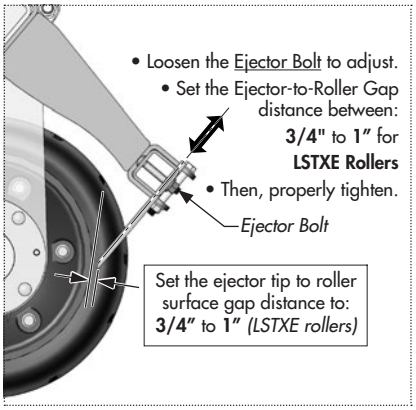




## SCRAPER POSITION OVERVIEW - LSTX

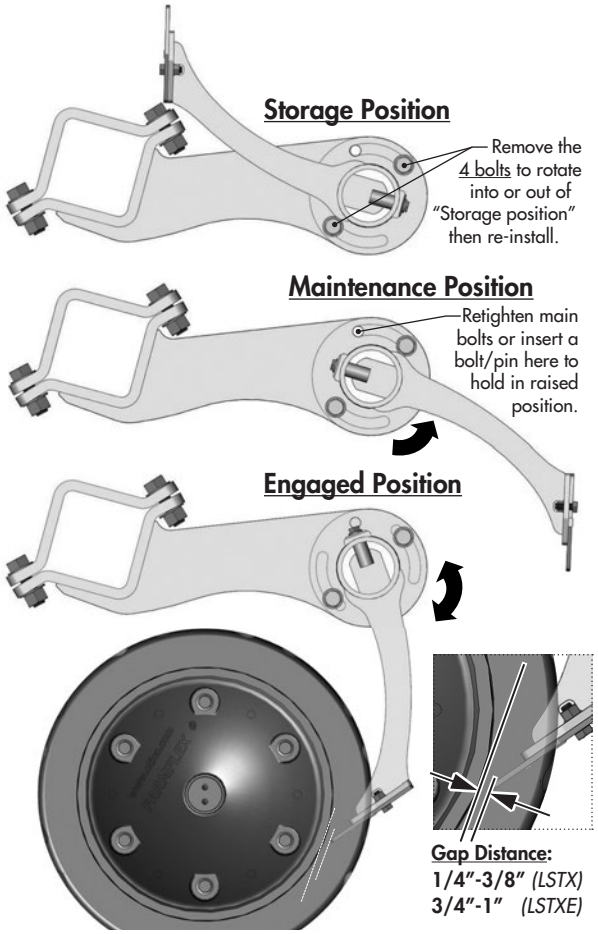


## SCRAPER SIDE-TO-SIDE POSITIONING - LSTX

Inspect that the scraper plates are as close to centered as possible in the roller groove & that no scrapers are touching the sides of the rubber roller. Ideally this gap should be ***1/4" for LSTX*** rollers *(as shown in diagram)* or ***1/2" for LSTXE*** rollers.

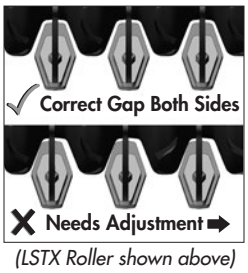


*(LSTX Roller shown above)*

If adjustment is needed, loosen the scraper arm clamps and adjust position until there is proper clearance on all edges. You may need to slightly adjust engagement distance if side-to-side is unsuccessful.



*(Example of LSTXE Roller)*

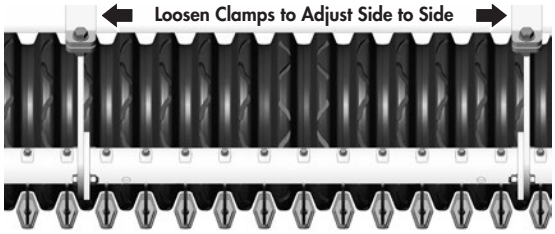


## SETTING SCRAPER POSITION - LSTX

**Change into Storage Position**:

- Loosen & remove the 4 bolts (2 per arm).
- Rotate section upward to new position.
- Reinstall bolts and tighten in place.
- Reverse procedure to put into working position.

**Change into Maintenance Position** (from engaged):

- Loosen the 4 bolts (2 per arm).
- Rotate section upward until top hole is open.
- Tighten bolts to secure and/or insert bolt or insert pin (user supplied) into top hole to secure in position.

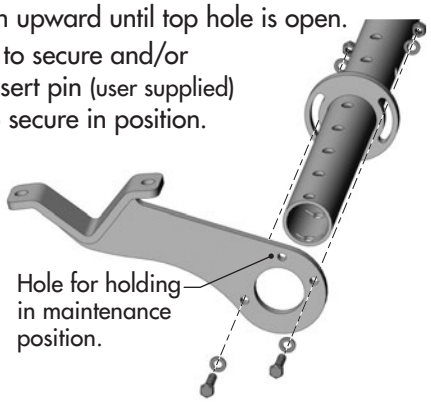


**Change into Engaged Position** (from maintenance):

- Loosen the 4 bolts (2 per arm).
- Rotate section down until scraper blades are set to proper distance from inner roller groove. *(Recommended distance: **1/4" to 3/8"** for **LSTX** rollers or **3/4" to 1"** for **LSTXE** rollers)*
- Tighten bolts to secure in position.

## INDIVIDUAL LSTX SCRAPER ARM ADJUSTMENT

The individual scraper arm position can also be fine tuned by loosening the top mounting bolt, adjusting the position, and then "holding in place" while retightening the bolt.

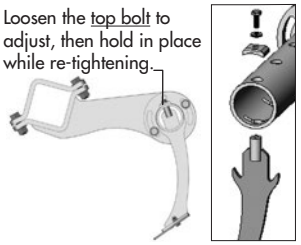


## REVERSING LSTX SCRAPER BLADES

The scraper blades are designed to be reversible in order to provide extended wear. It is advised to reorder replacement blades soon after reversing to prevent possible downtime in the future.





**Double Sided Scraper Blades**

**Note:** When blades are being reversed, the complete section must be changed at the same time or adjustment will not work properly.

# Operation - Adjustments: Rephasing Cylinders

## Overview & Principles of Rephasing

A **Rephasing Cylinder System** enables a pair (or multiple) cylinders to extend and retract in very near unison.

**Rephasing** is accomplished by using a rephasing passageway which is located at the position of full extension. Many design techniques accomplish this but in simplicity, the ***rephasing passageway*** allows a small amount of hydraulic fluid to bypass the cylinder piston in the fully extended position ultimately allowing the cylinders to rephase.

This feature allows the cylinders to be aligned during set up and ***rephased*** in the event of oil leakage/by-pass during usage or after service work.

A rephasing cylinder system will consist of a master cylinder and 1 or more slave cylinders. These cylinders operate evenly to raise and lower the implement to the desired working depth.

## Bleeding Air & Rephasing Function

Rephasing cylinder lift systems should be ***rephased*** periodically to purge any air that may be ingested into the system over time and/or compensate for drift due to system leakage.

To rephase the system, with the cylinder fully extended, actuate the cylinder valve for 30 seconds, or 5-10 seconds if you rephase often.

In a new rephasing circuit, a much longer time of maintaining a fully extended sequence may be required to bleed excessive air out of the circuit and may have to be repeated several times.

⚠ **IMPORTANT:** *A rephasing cylinder circuit utilizes positive-displacement that effectively transfers power between cylinders, with the possibility of increasing internal pressures from cylinder to cylinder. Intensification occurs in hydraulic cylinders when there is pressure supplied to the full bore end of the hydraulic cylinder (extension) but the rod end (retraction) port becomes blocked or under excessive load. Pressure intensification may cause pressures to exceed the working pressure ratings of the cylinders themselves, or other components within the system. Safety awareness and caution should be taken to identify signs or causes of potential pressure build-up in the circuit.*

## Troubleshooting

Series rephasing cylinder systems *(Master and Slave(s))* can exhibit undesirable behaviors such as ***creep*** *(drift or movement when the hydraulic cylinder is not in use)* or ***failing to stay synchronized*** *(not extending and retracting at the same rate).*

Below is a brief overview of some of the possible conditions that contribute to cylinder creep, drift or the series cylinder getting out of sync. Keep in mind that the cylinders are only part of the hydraulic circuit and there can be other contributing causes.

**Cylinder rod measurement method:**

Cylinder by-pass is a common field issue in series cylinder systems, and a systematic review is required to determine the problem.

- Extend the cylinders fully to the re-phasing position, then retract approximately 2+ inches away from the rephasing position.
- Immediately disconnect the hydraulics from tractor.
- Measure the length of the extended cylinder rod on each cylinder.
- Leave implement to stand for some an extended period of time, i.e. 3 hours.
- Re-measure length of rods again and compare before and after measurements.

  ***Please note:*** Variation can be expected if the implement is left over a time where the temperature change affects the hydraulics by contraction or expansion. Warm to cooler temperatures will cause the series cylinders to move. Make sure measurements are taken at similar temperatures.
- When the 'suspect' cylinder has been identified, disassembly must be carried out in a clean environment. The scoring of barrels and piston seals will usually indicate contamination of some type has entered the system.

**Air in the system:**

If one or all of the cylinders drift or the system is 'spongy' air is likely entrained in the system. Check for air bubbles going back to the tank or by removing the return line and catching oil in a clean container. With the rod clevises disconnected and the cylinders horizontal (ports at 12 o'clock) or vertical, hold in the re-phasing position until no aerated oil flows.

***Please note:*** Check the reservoir levels when carrying out this exercise. Once the air has been pushed out of the system the reservoir can become low. This can introduce air into the system again.

# Troubleshooting - Pro-Till 25

## Plugging disc rows in wet conditions:

- Ensure roller is turning & scrapers are set properly.
- Raise machine working depth.
- Increase operating speed slightly.
- Adjust pitch so front discs are slightly higher (add one more depth stop plate to wheel cylinders).
- Fully extend wheel & roller depth cylinders & hold for 30 seconds to re-phase.
- Check condition & operation of disc hubs (make sure they turn freely).
- Wait for soil conditions to dry out more.

## Roller skidding in wet conditions:

- Check scraper operation & settings.
- Raise machine working depth.
- Adjust pitch so rear discs are slightly higher & raise machine working depth.
- Momentarily take out of float & extend transport cylinders to simulate a rigid hitch ***(flat ground only)***. **Re-engage float** as soon as possible to avoid possible equipment damage.
- Wait for soil conditions to dry out more.
- Check condition & operation of bearings on both ends of the rollers.

## Mud not clearing from rubber rollers:

- Check scraper to roller distance & adjust if necessary *(scraper distance from roller should be **1/4" to 3/8"** for **LSTX** rollers -or- **3/4" to 1"** for **LSTXE** rollers).*
- Check scraper plate wear & adjust or replace as necessary (replace all scrapers per row at the same time).
- Check scraper row adjustment for slippage & re-torque or replace hardware if necessary.

## Roller plugged in wet conditions:

- Retract transport cylinders to pass over pushed up mound & smooth out when soil dries.
- Raise discs all the way up & drive 12-14 mph on firm soil to clear rollers.
- In certain wet soil conditions place scrapers in storage position to continue operating.
- If plugging persists wait for soil conditions to dry out even more.

## Rear discs or roller not engaging in very hard soil:

- Adjust pitch so front discs are higher by adding two depth stops or more to wheel cylinders only (It may be necessary to lower overall machine depth also).
- Momentarily take out of float & extend transport cylinders to simulate a rigid hitch ***(flat ground only)***. **Re-engage float** as soon as possible to avoid possible equipment damage.

## Not folding up for transport:

- Ensure hydraulic coupler has not disengaged or try a different tractor hydraulic port.
- Check for hose or fitting leaks.
- Tractor hydraulic system should have 2800 psi.
- Hydraulic fluid bypassing piston seals in one or both hydraulic cylinders. (Replace cylinder or re-build with new seals).
- Excessive mud built up on frame & rollers. Clear off frame raise discs all the way up & drive 12-14 mph on firm soil to clear rollers.

## Restriction or blocking on right side:

- Raise the deflector plate.
- Raise working depth of adjustable disc.
- Raise machine working depth.
- Reduce operating speed slightly.
- Extend right hand wheel adjustment to lift end of wing.
- Check condition & operation of disc hubs (make sure they turn freely).
- Wait for soil conditions to dry out more.

## Leaving a ridge or a groove between rollers:

- Adjust ridge wiper down slightly to remove ridge.
- Adjust ridge wiper up slightly to eliminate groove.



## Tractor oil temperatures are too high:

- Lower the flow on the wing circuit hydraulic remote. (Please refer to the Tractor's Operators Manual)

# Troubleshooting - Pro-Till 25

## Leaving a ridge or a groove between passes:

- Adjust deflector up to reduce ridge.
- Adjust deflector down to fill groove.
- Set right rear adjustable disc lower if there is a ridge.
- Set right rear adjustable disc higher if there is a groove.
- Check that end disc size configuration matches factory suggested setup.
- Reduce implement width on guidance for slightly more overlap.

## Subsoil leaving a groove/ridge every 10":

- Adjust pitch to level machine (disc rows are not set to the same depth).
- Adjust pitch to lower/raise rear disc row (front is prone to running deeper with floating hitch & firm soil conditions).
- Rear discs following in front disc groove (see troubleshooting for this below).

## Rear discs following in front disc cut or discs not doing a full cut:

- Adjust tracking by changing implement pitch.
- Adjust entire front row of disc gangs in small increments either left or right to achieve full cut.
- Check disc wear & adjust gang spacing or replace discs as necessary (as discs wear move front row right).
- Check factory settings on disc row locations to verify gang clamp hardware is tight & clamps have not slipped.
- Adjust GPS to actual cutting width *(see chart)* minus 6" overlap <u>per side</u> depending on working depth.
  **Note:** Also consider adjusting the GPS settings to include a 6" implement offset to the right.

| (with 20" discs) | **<u>2" Depth</u>** | **<u>MAX Depth</u>** |
|---|---|---|
| **Pro-Till 25** | 292" (7.42m) | 295" (7.5m) |

- Adjust working angle to approximately 20 degrees to the right from previously worked or seeded [illegible]
  *(Recommended practice)*

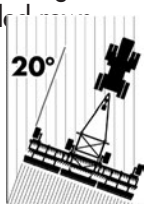


## End of wing discs cutting deeper or shallower than center:

- Fully extend wheel & roller depth cylinders & hold for 30 seconds to re-phase.
- Adjust the threaded rods on the end wheels:
  - Lengthen to lift end of wing if cutting deeper.
  - Shorten to lower end of wing if cutting shallower.
- Check for same number of depth control plates used on each side.
- Adjust the wing down pressure valve using an allen wrench in small increments of 50-100 psi until the desired result is achieved. **IMPORTANT:** *Do not exceed 1300 psi or mechanical damage will occur.*

## Tracking to the left:

- Add a depth stop to wheel cylinders to adjust the pitch so the front disc is higher.
- Reduce implement width on guidance system for slightly more overlap.
- Adjust implement offset on guidance system to the right.



## Tracking to the right:

- Add a depth stop to roller cylinders to adjust the pitch so the rear disc is higher.
- Reduce implement width on guidance system for slightly more overlap.
- Adjust implement offset on guidance system to the left.



## Hopping or leaving waves:

- Change operating speed (best performance is achieved over 10 mph).
- Change field working angle (best finishing at 5 to 20 degrees off previously worked).
- Adjust working depth (deeper & run slower or shallower to run faster).
- Pre-work heavy trash or wet areas at a slower speed & at a different angle than final pass.
- Wait for soil conditions to dry out more.
- Ensure the wing circuit hydraulic remote is constantly engaged in the extended direction.

## MAINTENANCE SAFETY

1. Review the Operator's Manual and all safety items before working with, maintaining or operating the PRO-TILL.
2. Stop the tractor engine, set park brake, remove ignition key and wait for all moving parts to stop before servicing, adjusting, repairing or unplugging.
3. Keep hands, feet, clothing and hair away from all moving and/or rotating parts.
4. Clear the area of bystanders, especially children, when carrying out any maintenance and repairs or making any adjustments.




5. Place safety stands or large blocks under the frame before removing tires or working beneath the machine.
6. Be careful when working around or maintaining a high-pressure hydraulic system. Wear proper eye and hand protection when searching for a high pressure hydraulic leak. Use a piece of wood or cardboard as a backstop when searching for a pin hole leak in a hose or a fitting.
7. Always relieve pressure before disconnecting or working on hydraulic system.
8. Never disconnect Pro-Till from tractor if rear sections of machine are partially raised. See warning below:







**WARNING/DANGER:** ***Never*** *disconnect Pro-Till from tractor if rear sections of machine are partially raised.* ***Negative Hitch Weight*** *may result, the hitch pole may suddenly raise and the rear section would come crashing down. Only disconnect when unit is on level ground in the proper transport or field position.*

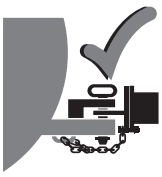

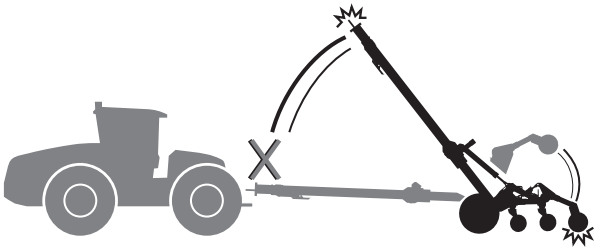

## MAINTENANCE CHECKLIST

After reviewing the Maintenance and Hydraulic Safety Information, use the Maintenance Checklist provided for regular service intervals and keep a record of all scheduled maintenance:

**( Initial break-in review. Read full section on pg.8 )**

**A.** Before using:

1. Read Safety Info. & Operator's Manual.
2. Complete "Pre-Operation Checklist"
3. Check all Bolt Tightness.
4. Adjust Disc Cutting Depth as outlined in the "Setting Disc Depth" section.

**B.** After operating for **2 hours**:

1. Check all hardware. Tighten as required.
2. Check all hydraulic system connections. Tighten if any are leaking.

### Maintenance Check - 10 Hours

- Check for worn or damaged parts
- Hydraulic fluid leaks
- Damaged hoses
- Check tire pressure:

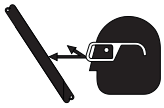

Center/Transport Tires (confirm tire type):
389 AGRIFLEX+: 560/60 R22.5: **40 PSI (275 kPa)**

End Wheel Tires: **40 PSI (275 kPa)**



### Maintenance Check - 50 Hours

- Grease hubs & spindles
- Check working points & pins
- Safety signs clean



### Annually

- Bolt tightness
- Wheel bearings

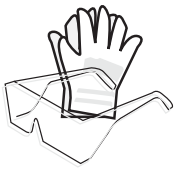



**IMPORTANT:** *Safely secure Pro-Till in winged forward transport position when changing or servicing discs.*

## HARDWARE SPECIFICATIONS

**Note:** Unless stated otherwise, hardware is typically:
Hex, Plated GR5 UNC or P8.8 (metric)

## TORQUE SPECIFICATIONS

TORQUE

### Checking Bolt Torque

The tables below give correct torque values for various bolts and capscrews. Tighten all bolts to the torques specified in chart unless otherwise noted. Check the tightness of bolts periodically, using these bolt torque charts as a guide. Replace hardware with the same strength (Grade/Class) bolt.

**IMPERIAL TORQUE SPECIFICATIONS**

(Coarse Thread - based on "Zinc Plated" values)




| Size | Grade 5 | Grade 8 |
|---|---|---|
| | lb.ft (*N.m*) | lb.ft (*N.m*) |
| **1/4"** | **7 (*10*)** | **10 (*14*)** |
| 5/16" | 15 (*20*) | 20 (*28*) |
| **3/8"** | **25 (*35*)** | **35 (*50*)** |
| 7/16" | 40 (*55*) | 60 (*80*) |
| **1/2"** | **65 (*90*)** | **90 (*120*)** |
| 9/16" | 90 (*125*) | 130 (*175*) |
| **5/8"** | **130 (*175*)** | **180 (*245*)** |
| 3/4" | 230 (*310*) | 320 (*435*) |
| **7/8"** | **365 (*495*)** | **515 (*700*)** |
| 1" | 550 (*745*) | 770 (*1050*) |
| **1-1/8"** | **675 (*915*)** | **1095 (*1485*)** |
| 1-1/4" | 950 (*1290*) | 1545 (*2095*) |
| **1-3/8"** | **1250 (*1695*)** | **2025 (*2745*)** |
| 1-1/2" | 1650 (*2245*) | 2690 (*3645*) |

**METRIC TORQUE SPECIFICATIONS**

(Coarse Thread - based on "Zinc Plated" values)




| Size | Class 8.8 | Class 10.9 |
|---|---|---|
| | lb.ft (*N.m*) | lb.ft (*N.m*) |
| **M6** | **7 (*10*)** | **10 (*14*)** |
| M8 | 16 (*22*) | 23 (*31*) |
| **M10** | **30 (*42*)** | **45 (*60*)** |
| M12 | 55 (*75*) | 80 (*108*) |
| **M14** | **90 (*120*)** | **125 (*170*)** |
| M16 | 135 (*185*) | 195 (*265*) |
| **M18** | **190 (*255*)** | **270 (*365*)** |
| M20 | 265 (*360*) | 380 (*515*) |
| **M22** | **365 (*495*)** | **520 (*705*)** |
| M24 | 460 (*625*) | 660 (*895*) |
| **M27** | **675 (*915*)** | **970 (*1315*)** |
| M30 | 915 (*1240*) | 1310 (*1780*) |
| **M33** | **1250 (*1695*)** | **1785 (*2420*)** |
| M36 | 1600 (*2175*) | 2290 (*3110*) |

## HYDRAULIC SAFETY

- Make sure that all components in the hydraulic system are kept in good condition and are clean.
- Replace any worn, cut, abraded, flattened or crimped hoses and metal lines.
- Do not attempt any makeshift repairs to the hydraulic lines, fittings or hoses by using tape, clamps or cements. The hydraulic system operates under extremely high-pressure. Such repairs will fail suddenly and create a hazardous and unsafe condition.
- Wear proper hand and eye protection when searching for a high-pressure hydraulic leak. Use a piece of wood or cardboard as a backstop instead of hands to isolate and identify a leak.

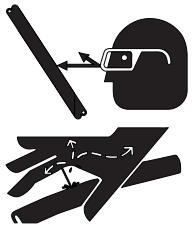

- If injured by a concentrated high-pressure stream of hydraulic fluid, seek medical attention immediately. Serious infection or toxic reaction can develop from hydraulic fluid piercing the skin surface.
- Before applying pressure to the system, make sure all components are tight and that lines, hoses and couplings are not damaged.

## HYDRAULIC HOSE SPECIFICATIONS

**Note:** Unless otherwise stated, Hydraulic Hoses are either 3/8 or 1/2 with ORF female swivel ends.

## HYDRAULIC HOSE INSTALLATION TIPS

The following tips are to help you identify some possible problem areas in the installation of hydraulic hoses.

1. Installation should be completed in a clean environment clear of dust and contaminants. Hoses and fittings should be capped if not installed.
2. Ensure hoses are not twisted during installation as this may weaken the hose. Also, the pressure in a twisted hose may loosen fittings or connections.
3. Allow sufficient bend radius in hoses when installing to prevent lines from collapsing and flow becoming restricted.
4. When installing hoses in an area of movement or flexing, allow enough free length for motion and to ensure fitting connections are not stressed.
5. Ensure hoses are properly clamped and secured in position after routing is complete to provide a cleaner installation and prevent possible damage or hazards.

## HYDRAULIC FITTING INSTALLATION

The following info is to help you identify and properly install some of our standard hydraulic fittings.

### SAE (JIC) 37° Flare

JIC fittings - Metal-to-metal sealing type fittings featuring a 37° flare (angle of sealing surface) and straight UNF (Unified National Fine) Threads.

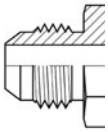

| (Lubricated Values) Dash | Thread Size | Torque - lb.ft (*N.m*) | |
|---|---|---|---|
| -4 | 7/16 - 20 | 9-12 | (12-16) |
| -6 | 9/16 - 18 | 14-20 | (*19-27*) |
| -8 | 3/4 - 16 | 27-39 | (*37-53*) |
| -10 | 7/8 - 14 | 36-63 | (*50-85*) |
| -12 | 1-1/16 - 12 | 65-88 | (*90-119*) |

#### Tightening JIC 37° Flare Type Fittings

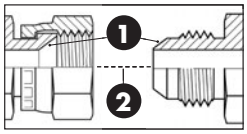


1. Check flare and flare seat for defects that might cause leakage.
2. Align fittings before tightening. Lubricate connections & hand tighten swivel nut until snug.
3. Using two wrenches, torque to values shown in table.

*Alternate Installation Method*

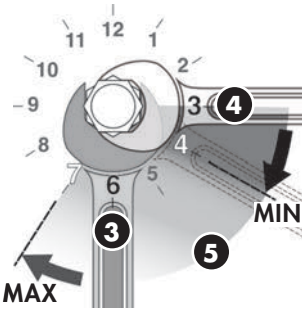


3. Using two wrenches. Place one wrench on the fixed connector body at a clock position of **6** o'clock.
4. Place the second wrench on the second connection as close to the **3** o'clock position as possible.
5. Tighten by rotating the second connection firmly to at least the **4** o'clock position, but no more than the **7** o'clock position. Typically, the larger the fitting size the less rotation required.

### ORFS (O-Ring Face Seal)

ORFS fittings use an O-ring compression method to seal. This method offers a high level of sealing along with good vibration resistance. Male fittings include an O-ring located in a groove on the flat face. Female fittings feature a flat face and UNF straight threaded swivel nut.

The **Torque** method is recommended for ORFS installation.

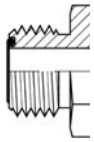

| Dash | Thread Size | Torque - lb.ft (*N.m*) | |
|---|---|---|---|
| -4 | 9/16 - 18 | 18 | (*25*) |
| -6 | 11/16 - 16 | 30 | (*40*) |
| -8 | 13/16 - 16 | 40 | (*55*) |
| -10 | 1 - 14 | 60 | (*80*) |
| -12 | 1-3/16 - 12 | 85 | (*115*) |

#### Tightening ORFS (O-Ring Face Seal) Fittings

1. Inspect components and ensure the O-Ring seal is undamaged and properly installed in the groove of the face seal. Replacing the O-Ring may be necessary.
2. Align, thread into place and hand tighten.
3. Tighten to proper torque from the table shown above.

**Note:** A **DASH** size refers to a diameter of a hose (*inside*) or of a tube (*outside*) measured in 1/16" increments.
For example, a ***Hose*** specified as *dash* **8** or **-8** would have an **inside** diameter of **8***/16"* or **1/2"**.
Alternatively, a ***Tube*** specified as *dash* **8** or **-8** would have an ***outside*** diameter of **8***/16"* or **1/2"**.

### ORB (O-Ring Boss)

Male ORB fittings have straight UNF threads, a sealing face and an O-ring. The female fittings are generally found in the ports of machines and feature straight threads, a machined surface, and a chamfer to accept the O-ring. Sealing is achieved through the compression of the male O-ring against the chamfered sealing face of the female fitting.

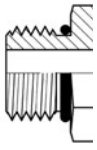

| (Lubricated Values) Dash | Thread Size | Torque Non-Adjustable lb.ft (*N.m*) | Torque Adjustable lb.ft (*N.m*) |
|---|---|---|---|
| -4 | 7/16 - 20 | 30 (*40*) | 15 (*20*) |
| -6 | 9/16 - 18 | 35 (*46*) | 35 (*46*) |
| -8 | 3/4 - 16 | 60 (*80*) | 60 (*80*) |
| -10 | 7/8 - 14 | 100 (*135*) | 100 (*135*) |
| -12 | 1-1/16 - 12 | 135 (*185*) | 135 (*185*) |

#### Tightening ORB (O-Ring Boss) Fittings

**Non-adjustable Port End Assembly**

1. Inspect the components to ensure that male and female threads and sealing surfaces are free of nicks, burrs, scratches, or any foreign material.
2. Ensure O-Ring seal is properly installed and undamaged.
3. Lubricate threads and O-ring to help the O-ring slide past the port entrance corner and avoid damaging it.
4. Screw the fitting into position tighten to proper torque value from the table shown above.

**Adjustable Port End Assembly**

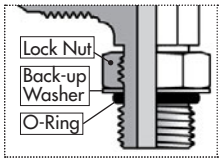


1. Inspect the components to ensure male & female threads and sealing surfaces are free of nicks, burrs, scratches, or any foreign material.
2. Ensure O-Ring seal is properly installed and undamaged.
3. Lubricate threads and O-ring to help the O-ring slide smoothly into the port and avoid damage.
4. Loosen back the lock nut as far as possible. Make sure back-up washer is not loose and is pushed up as far as possible.
5. Screw the fitting into port until the back-up washer or the retaining ring contacts face of the port. Light wrenching may be necessary. Over tightening may damage washer.
6. To align the end of the fitting to accept incoming tube or hose assembly, unscrew the fitting by the required amount, but not more than one full turn.
7. Using two wrenches, hold the fitting in desired position and tighten the locknut to the proper torque value from the table located above.
8. Inspect to ensure that O-ring is not pinched and that washer is seated flat on the face of the port.

## WHEEL HUB REPAIR

**IMPORTANT:** *Be sure to block up unit securely before removing tires.*

### DISASSEMBLY

1. Remove dust cap.
2. Remove cotter pin from nut.
3. Remove nut and washer.
4. Pull hub off spindle.
5. Dislodge the inner cone bearing and dust seal.
6. Inspect cups that are press fitted into hub for pits or corrosion and remove if necessary.
7. Inspect and replace defective parts with new ones.

### ASSEMBLY

1. If cups need replacing, be careful to install them gently and evenly into hub until they are fully seated.
2. Apply a thick wall of grease inside hub. Pack grease in cones.
3. Install inner cone and dust seal as illustrated.
4. Position hub onto spindle and fill surrounding cavity with grease.
5. Assemble outer cone, washer and nut.
6. Tighten nut while rotating hub until there is a slight drag.
7. Turn nut back approximately 1/2 turn to align cotter pin hole with notches on nut.
8. Install cotter pin and bend legs sideways over nut.
9. Fill dust cap half full of grease and gently tap into position.
10. Pump grease into hub through grease fitting until lubricant can be seen from dust seal.

**COMMON HUB & SPINDLE COMPONENTS**

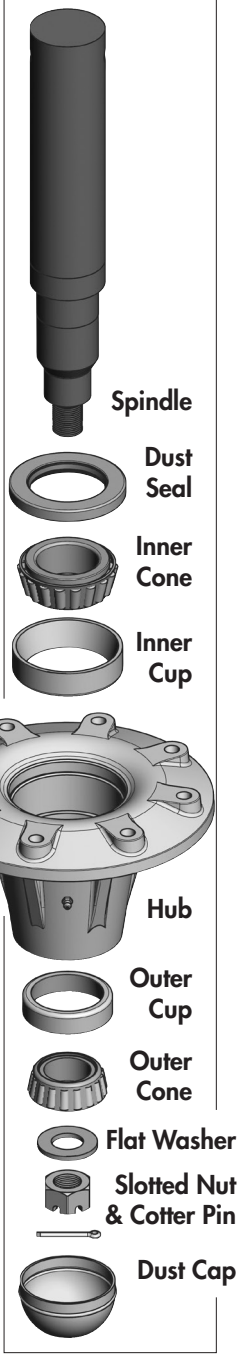


## WHEEL NUT & WHEEL BOLT TORQUE

TORQUE

### BOLT PATTERNS

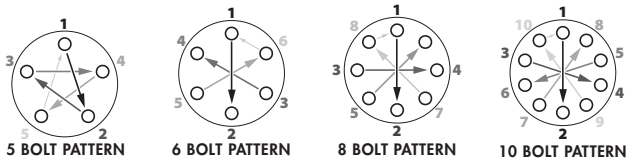


**Wheel Nut/Bolt Torque**

| Size | lb.ft (N.m) |
|---|---|
| 9/16 | 120-130 (165-175) |
| 5/8 | 185-190 (250-260) |
| 3/4 | 280-300 (380-405) |

### Wheel Tightening Procedure

1. Install and **hand tighten** nuts/bolts.
2. Tighten to approx. **20% Torque** value using the Bolt **Star or CrissCross** patterns shown above.
3. Tighten to **Full Torque** value using the **Star or CrissCross** pattern.
4. If applicable, install **Rear Locknuts** using **Wheel Torque Values**.

## STORAGE

The PRO-TILL should be carefully prepared for storage to ensure that all dirt, mud, debris and moisture has been removed.

*Follow this procedure when preparing to store:*

1. Wash the entire machine thoroughly using a water hose or pressure washer to remove all dirt, mud, debris or residue.
2. Inspect all parts to see if anything has become entangled in them. Remove entangled material.
3. Lubricate hub and spindle grease fittings to remove moisture
4. Inspect all hydraulic hoses, fittings, lines and couplers. Tighten any loose fittings. Replace any hose that is badly cut, nicked or abraded or is separating from the crimped end of the fitting.
5. Touch up all paint nicks and scratches to prevent rusting.
6. Select an area that is dry, level and free of debris.
7. Store in either Transport or Field position.
8. Use hydraulic cylinder jack.
9. Oil any exposed chrome shafts on the hydraulic cylinders to prevent rusting.

## HYDRAULIC CYLINDER REPAIR

### PREPARATION

When cylinder repair is required, clean off unit, disconnect hoses and plug ports before removing cylinder.

When removed, open the cylinder ports and drain the cylinder's hydraulic fluid.

Examine the type of cylinder. Make sure you have the correct tools for the job.

*You may require the following tools:*

- *Proper **Seal Kit***
- *Allen Key Set*
- *Emery cloth*
- *Torque Wrench*

**Threaded Head Cylinder**
(Monarch)

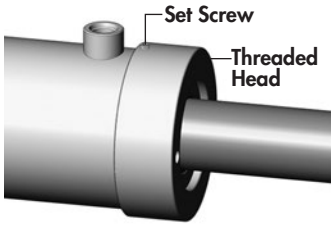


## CYLINDER ROD LOCKNUT TORQUE VALUES

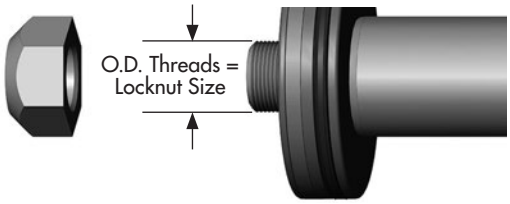


| LOCKNUT SIZE (PISTON) | TORQUE VALUE |
|---|---|
| 3/8 - 24 UNF | 25-30 lb.ft (35-42 *N.m*) |
| **1/2 - 20 UNF** | **40-60 lb.ft *(55-80 N.m)*** |
| 5/8 - 18 UNF | 95-105 lb.ft (130-140 *N.m*) |
| **3/4 - 16 UNF** | **175-225 lb.ft *(240-305 N.m)*** |
| 7/8 - 14 UNF | 200-275 lb.ft (270-370 *N.m*) |
| **1 - 14 UNF** | **300-380 lb.ft *(405-515 N.m)*** |
| 1 1/8 - 12 UNF | 400-500 lb.ft (540-675 *N.m*) |
| **1 1/4 - 12 UNF** | **500-600 lb.ft *(675-810 N.m)*** |
| 1 1/2 - 12 UNF | 700-800 lb.ft (950-1085 *N.m*) |
| **1 3/4 - 12 UNF** | **800-900 lb.ft *(1085-1220 N.m)*** |

## REPAIRING A THREADED HEAD CYLINDER

### Set Screw Style

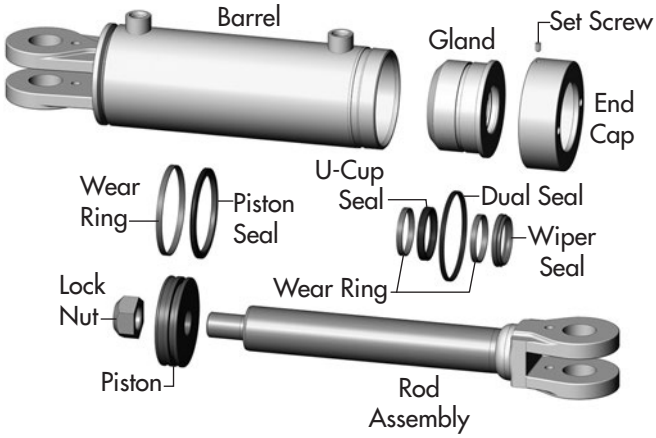


***DISASSEMBLY***

1. Loosen Set Screw and turn off end cap.
2. Carefully remove piston/rod/gland assemblies.
3. Disassemble the piston from the rod assembly by removing lock nut.

**NOTE**: *DO NOT* clamp rod by chrome surface.

4. Slide off gland assembly & end cap.
5. Remove seals and inspect all parts for damage.
6. Install new seals and replace damaged parts with new components.
7. Inspect the inside of the cylinder barrel, piston, rod and other polished parts for burrs and scratches. Smooth areas as needed with an emery cloth.

***REASSEMBLY***

1. Reinstall rod through end cap & gland assembly.
2. Secure piston to rod with lock nut. Torque lock nut to proper value (refer to chart for proper torque value).
3. Lube inside of barrel, piston seals, and gland seals with hydraulic oil.
4. With cylinder body held gently in a vise, insert piston, gland, end cap and rod combination using a slight rocking motion.
5. Apply Loctite anti-seize before installing cylinder end cap.
6. Torque cylinder end cap to 440 lb.ft (600 N.m).
7. Tighten Set Screw on end cap to 6 lb.ft (8 N.m).

## REPLACING A PRESSED BUSHING

**NOTE:** *You may need the following tools: Press, hammer, punch, pry-bar, "Step-Tool"*

*Use the following as a guideline for repair:*

1. Ensure the area and frame are properly secured, supported, and safe to work on. Safely remove the pin(s), cylinder, and/or components necessary in order to access and work on the damaged bushing.
2. Remove the existing bushing using required tools. In some instances, you may need to cut the damaged bushing in order for easier removal (use proper safety precautions and try not to damage other components if using this method).
3. With the bushing removed, clean and prepare the location for the new bushing insert. **Note:** A mixture of "*Dish Soap and Water*" is recommended to use as a lubricant on the outside of the composite bushing.

> ⚠ **IMPORTANT:** DO NOT use *oil or grease* on outside or inside of composite bushings.

4. Use a stepped tool to ensure the edge of the bushing is not damaged when inserting.

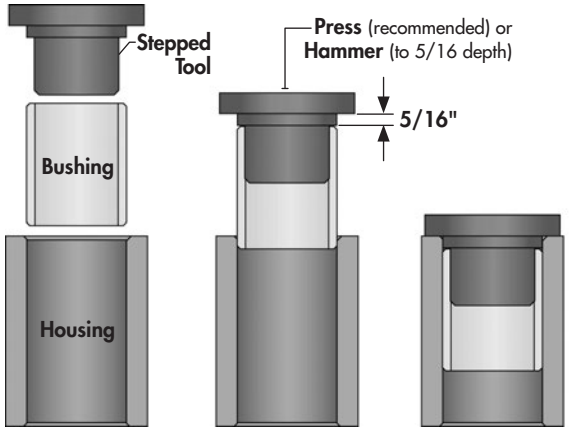


5. Ensuring the bushing is properly aligned, press into hole (preferred method) or hammer into position by striking the stepped tool.
6. Continue to install until the bushing edge is recessed in to a distance of 5/16" to allow for the outer seal to be properly installed. Do not exceed this depth.
7. Repeat steps 4-6 for opposite bushing (*if applicable*).
8. When both bushings are installed to the proper depth, install the new seals.
9. Re-assemble all other necessary components.

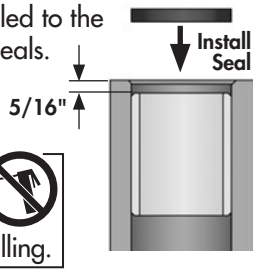


> ⚠ **IMPORTANT:** DO NOT use *oil or grease* on pins or bushing surfaces when re-installing.

## SAFETY DECALS & REFLECTORS

Keep safety decals and signs clean and legible at all times. Replace safety decals and signs that are missing or have become illegible. Safety decals or signs are available from your Dealer Parts Department.

## DECAL LOCATION OVERVIEW

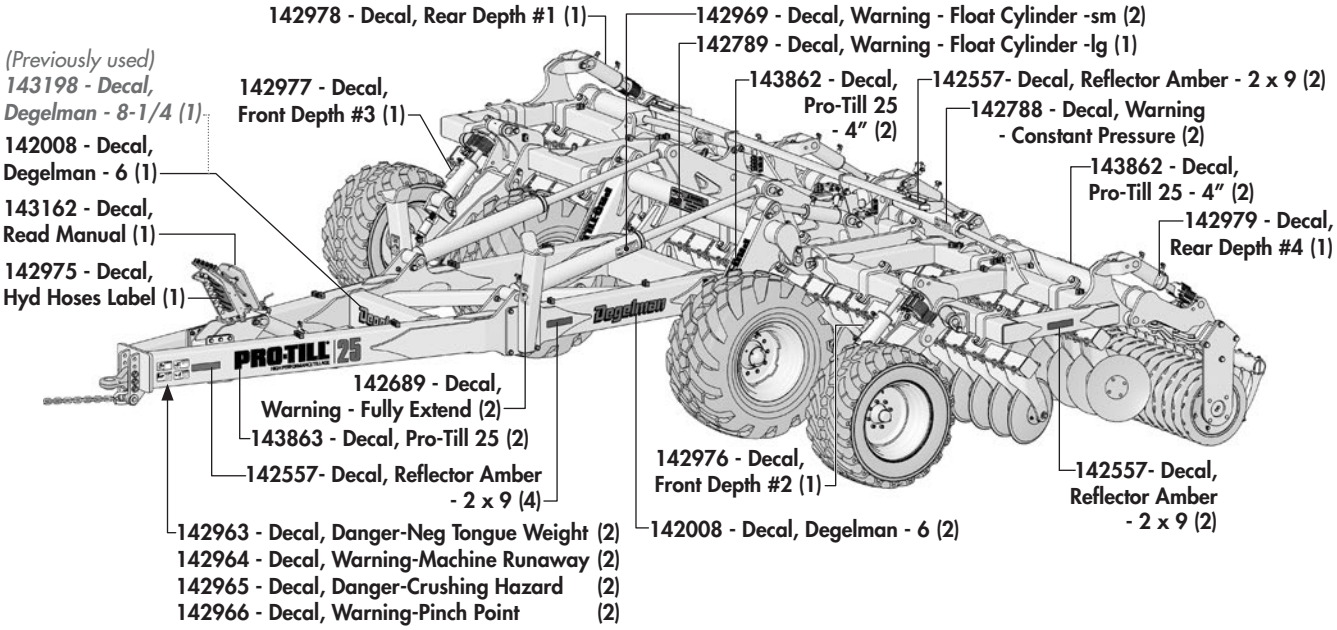


| | |
|---|---|
| 143162 - Decal, Read Manual | (1) |
| 142963 - Decal, Danger-Neg Tongue Weight | (2) |
| 142964 - Decal, Warning-Machine Runaway | (2) |
| 142965 - Decal, Danger-Crushing Hazard | (2) |
| 142966 - Decal, Warning-Pinch Point | (2) |
| 142789 - Decal, Warning-Float Cylinder-lg | (1) |
| 142969 - Decal, Warning-Float Cylinder-sm | (2) |
| 142788 - Decal, Warning-Constant Pressure | (2) |
| 142689 - Decal, Warning-Fully Extend | (2) |
| 142556 - Decal, Reflector Red - 2 x 9 | (2) |
| 142557 - Decal, Reflector Amber - 2 x 9 | (8) |
| 142650 - Decal, Fluorescent - 2 x 9 | (2) |
| 142975 - Decal, Hydraulic Hose Label | (1) |
| 142976 - Decal, Front Disc Depth #2 | (1) |
| 142977 - Decal, Front Disc Depth #3 | (1) |
| 142978 - Decal, Rear Disc Depth #1 | (1) |
| 142979 - Decal, Rear Disc Depth #4 | (1) |
| 142008 - Decal, Degelman - 6" *(3)* | (4) |
| *143198 - Decal, Degelman - 8-1/4" (previous)* | *(1)* |
| 143862 - Decal, Pro-Till 25 - 4" | (4) |
| 143863 - Decal, Pro-Till 25 - 7" | (2) |

***Decals not shown in above image:***

*(Located on under side of light bar, both ends)*

142556 - Decal, Red Reflector - 2 x 9 (2)
142650 - Decal, Fluorescent - 2 x 9 (2)

*(Located on rear center Roller Frame)*

142008 - Decal, Degelman - 6 (1)

## Exploded Pro-Till 25 Overview

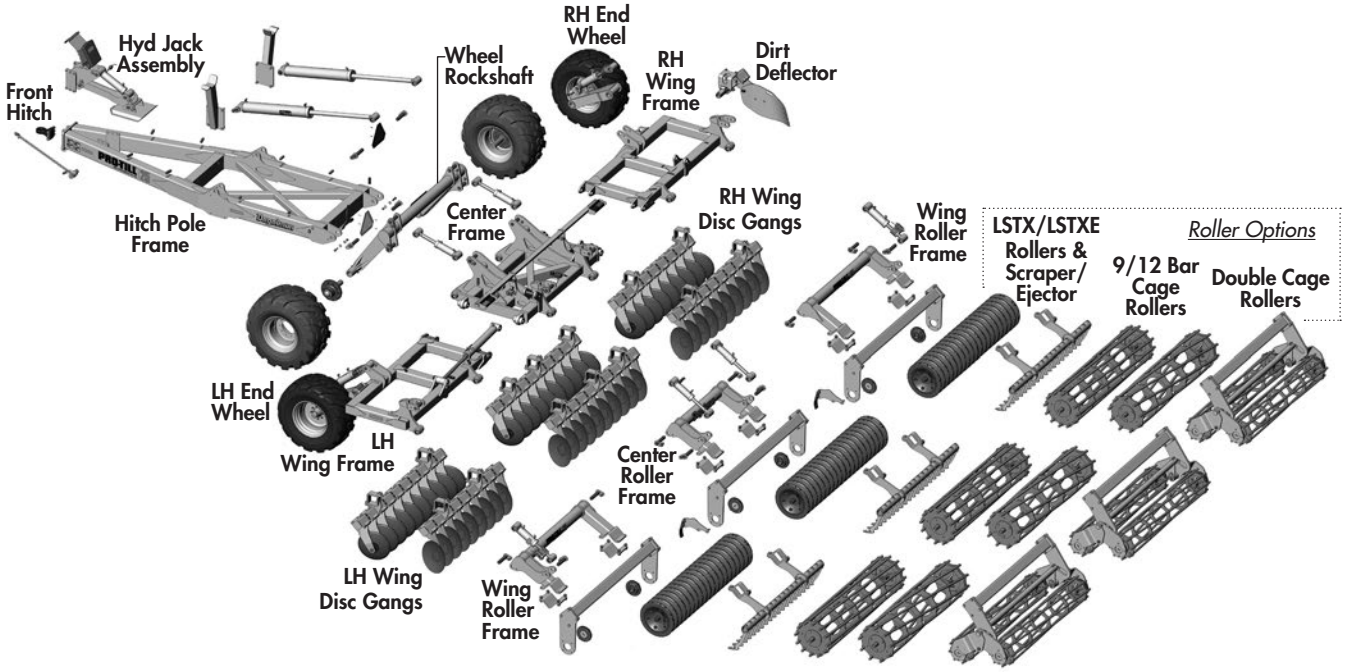




# Hitch Pole / Front Frame Components

## Hitch Pole /Front Frame Overview

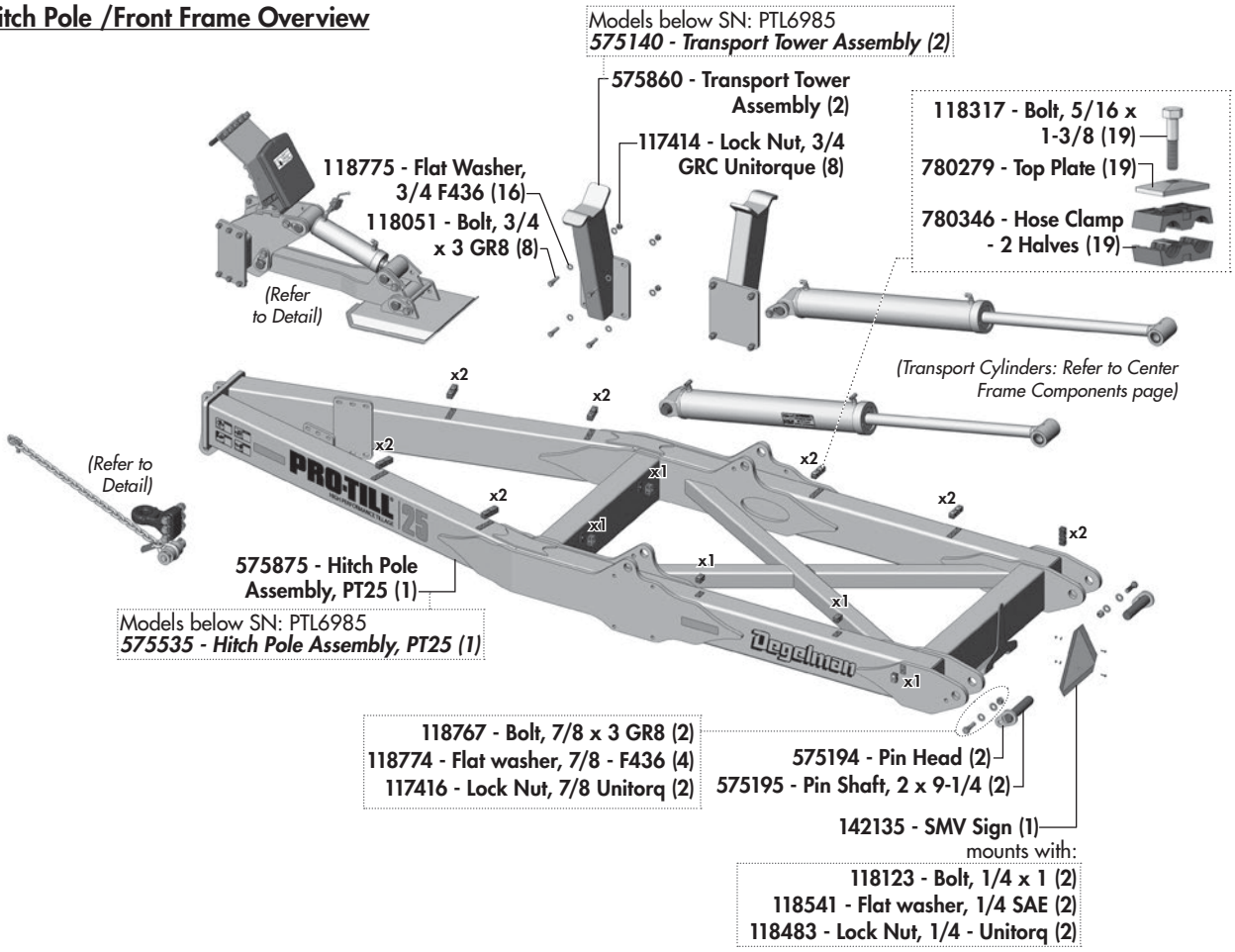


## Front Hitch Components

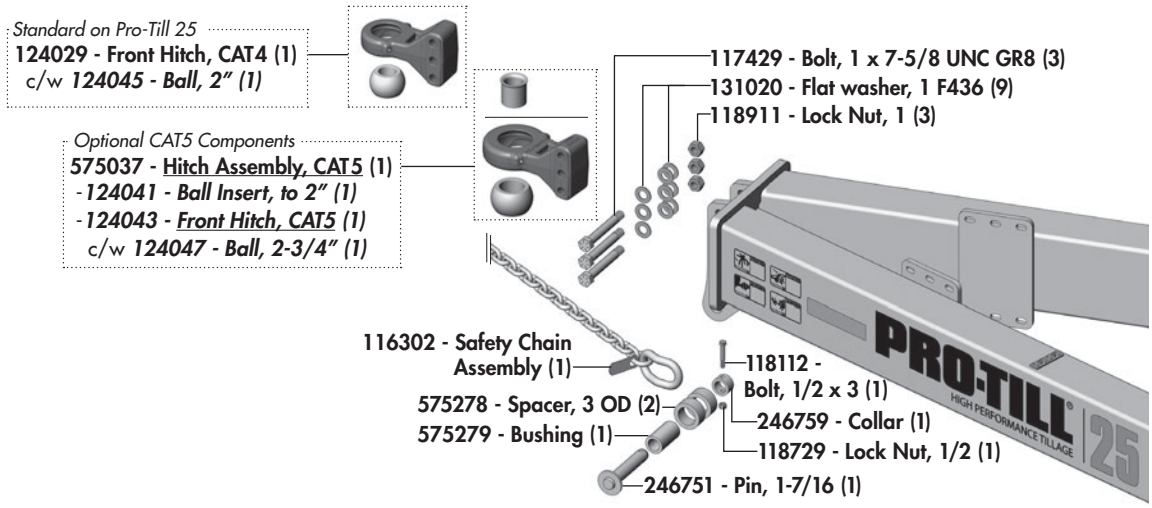

# Hitch Pole / Front Frame Components

## Jack / Hose Mount Stand Assembly Components

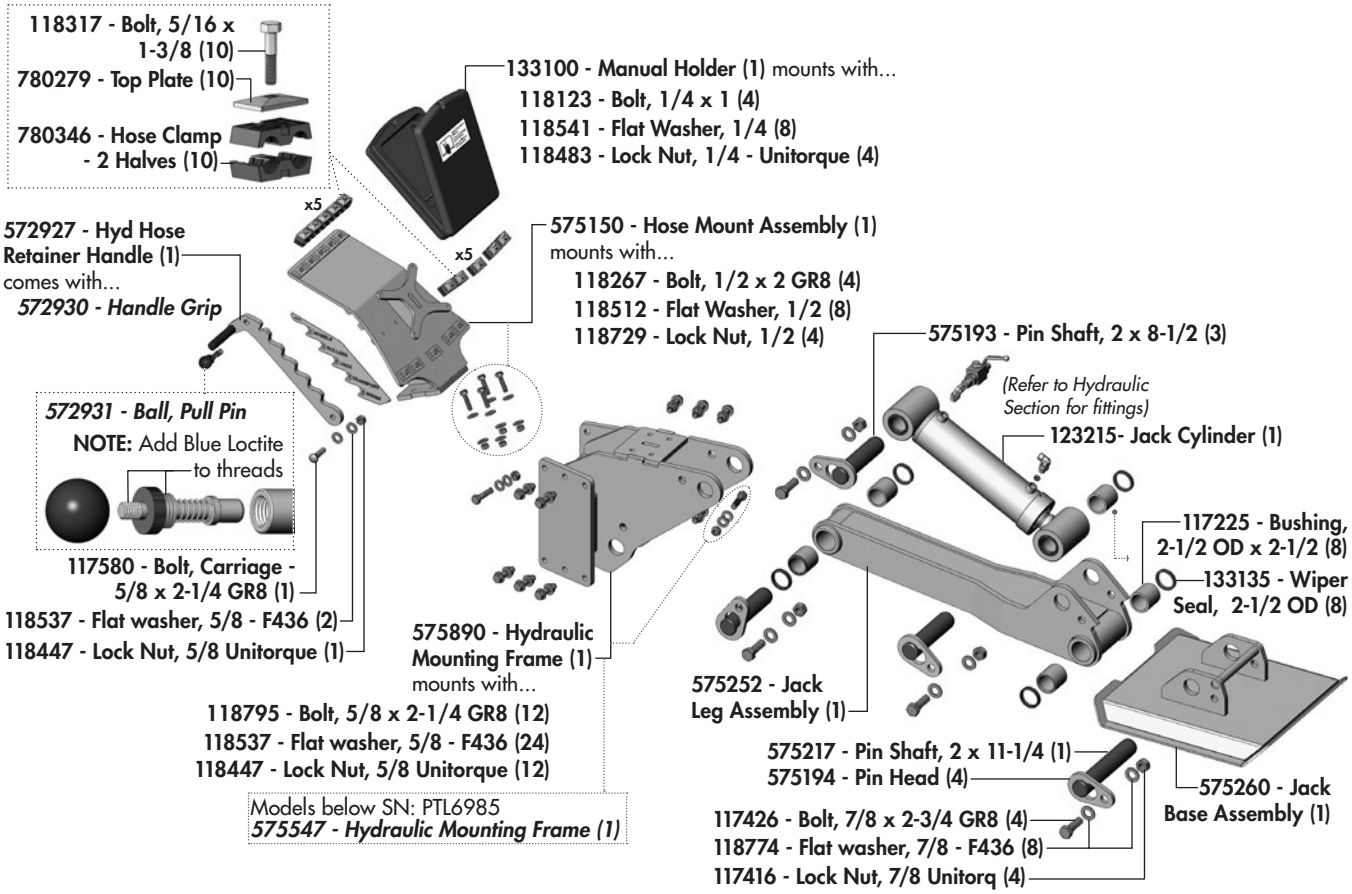

# Wheel & Rockshaft Components

## Rockshaft & Wheel Components

| Wheel Nut/Bolt Torque | |
|---|---|
| Size | lb.ft (N.m) |
| 3/4 | 280-300 (380-405) |

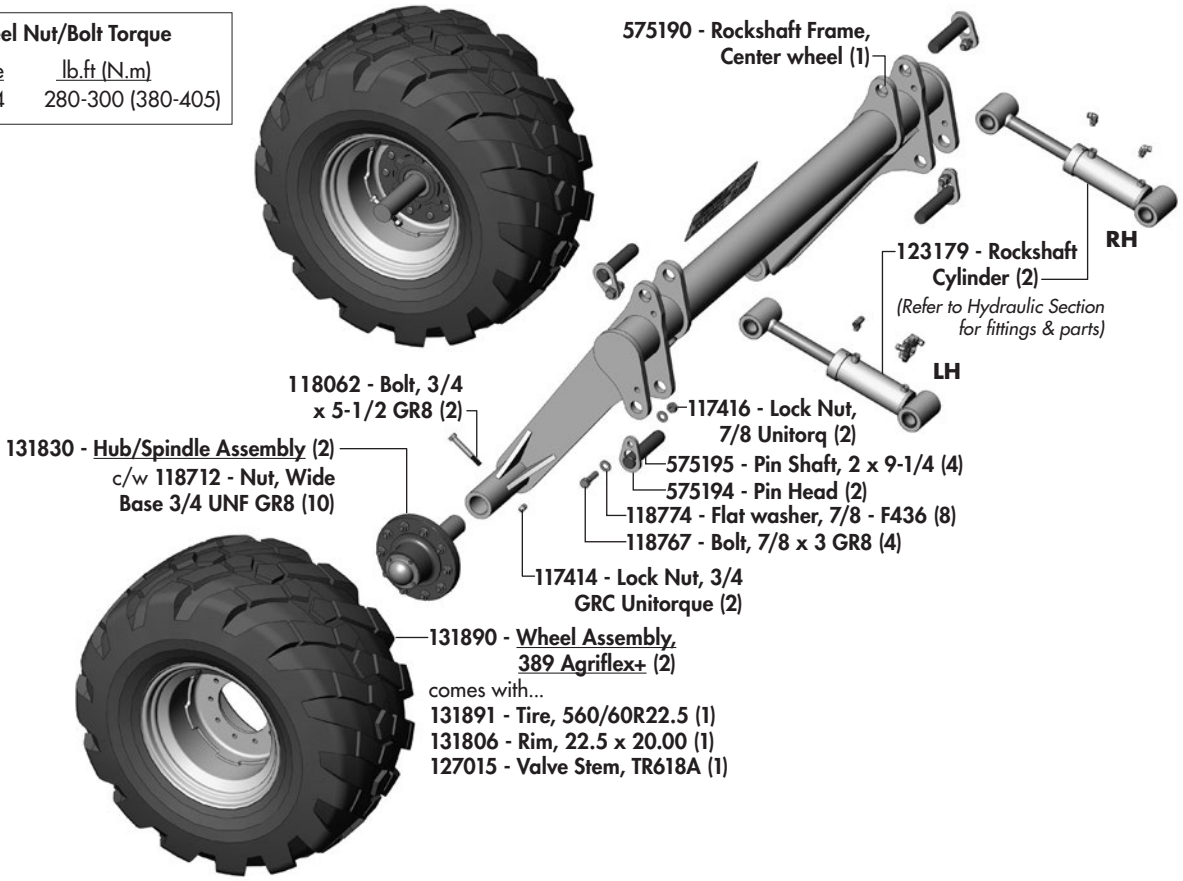


AGRIFLEX+ 389
Tire Pressure: **40 PSI** (275 kPa)

## 131830 - Hub/Spindle Assembly (2)

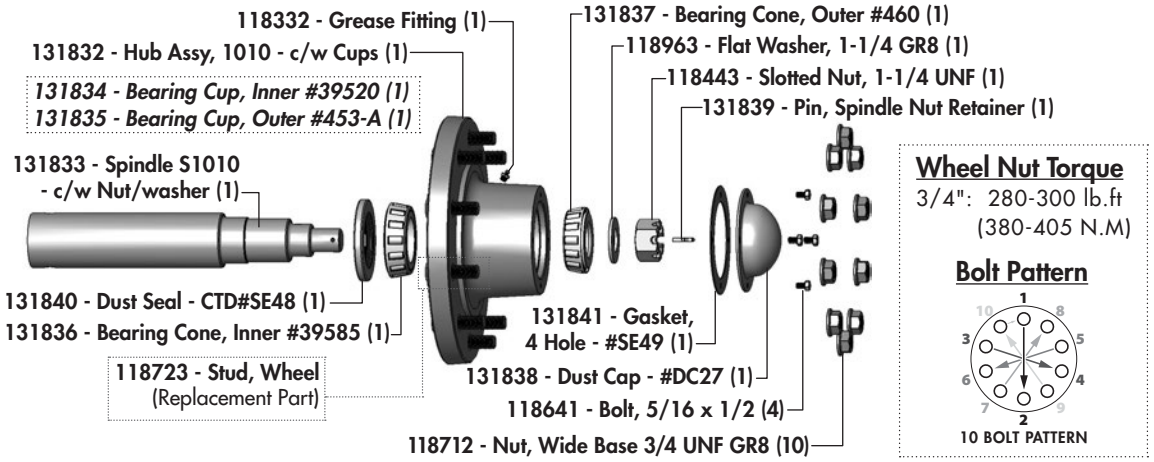


**Wheel Nut Torque**
3/4": 280-300 lb.ft
(380-405 N.M)

**Bolt Pattern**




10 BOLT PATTERN

# Center Frame Components

## Transport Cylinder Components

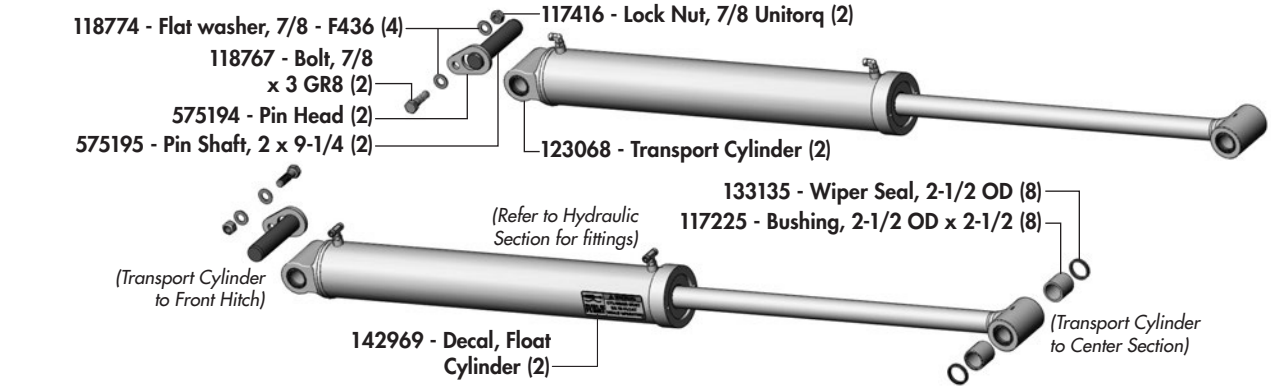


## Center Frame Components

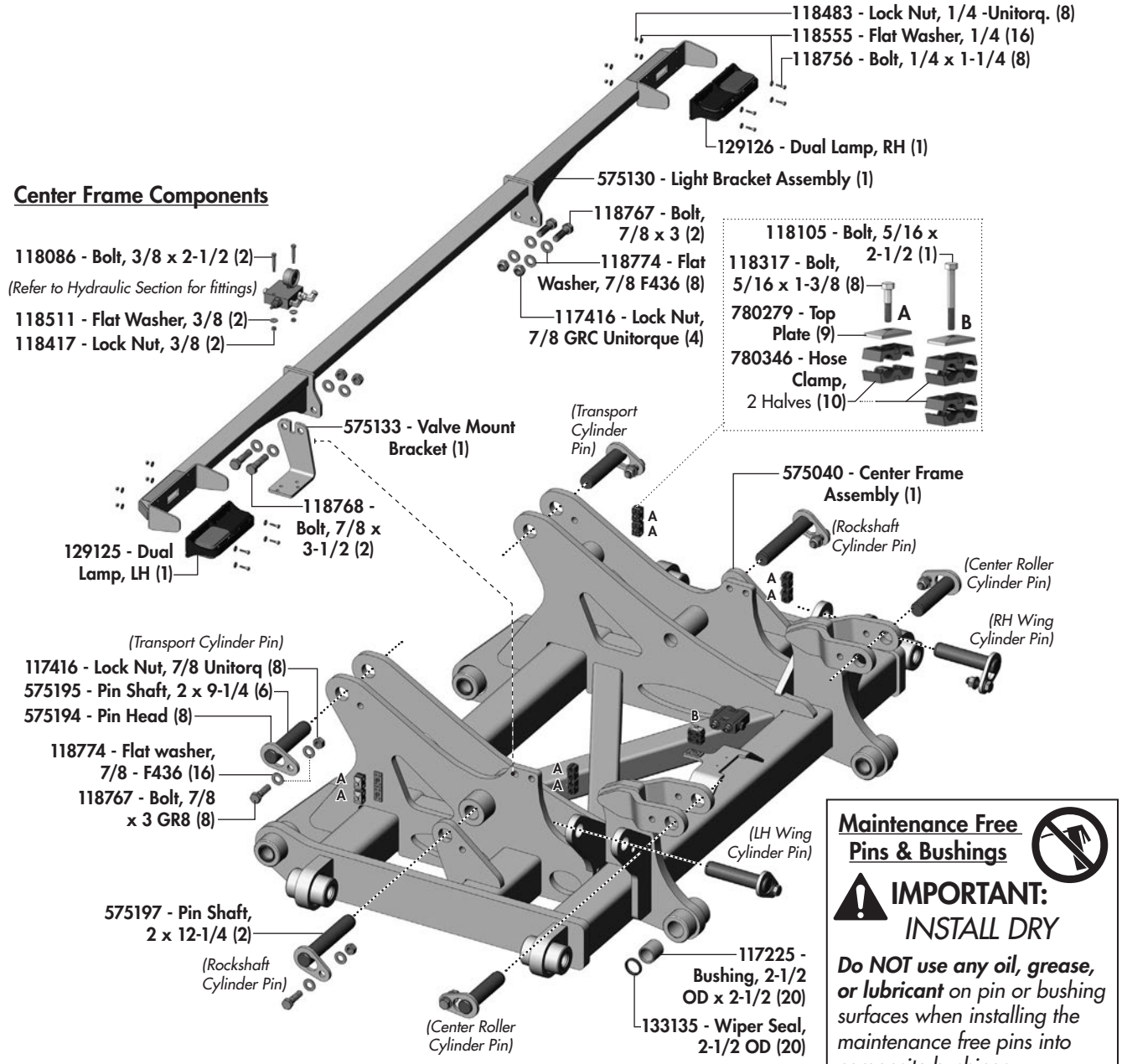


**Maintenance Free Pins & Bushings**

**IMPORTANT:**
*INSTALL DRY*

***Do NOT use any oil, grease, or lubricant*** *on pin or bushing surfaces when installing the maintenance free pins into composite bushings.*

# End Wheel Components

## End Wheel Components for Pro-Till 25 *(RH Shown)*



*(RH Wing End Wheel Assembly shown)*

Models below SN: PTL6985
**131892 - Wheel Assembly, 389 Agriflex+ (2)**
comes with...
**131893 - Tire 500/60R-22.5 (1)**

**131897 - Wheel Assembly, 389 Agriflex+ (2)**
comes with...
**131898 - Tire 550/45R-22.5 (1)**
**131863 - Rim, 22.5 x 16 8H (1)**
**127015 - Valve Stem TR618A (1)**

Tire Pressure:
**40 PSI** (275 kPa)



**131776 - Wheel Nut, 5/8 UNF GR8 (8)**

**Wheel Nut/Bolt Torque**

| Size | lb.ft (N.m) |
|---|---|
| 5/8 | 185-190 (250-260) |

**123178 - End Wheel Cylinder (1)**
*(Refer to Hydraulic Section for fittings)*

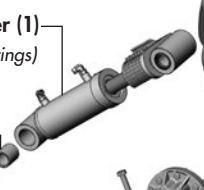

**117225 - Bushing, 2-1/2 OD x 2-1/2 (4)**
**133135 - Wiper Seal, 2-1/2 OD (4)**



**131616 - Hub/Spindle Assembly HA817-3" (1)**

Mounts with...
**118062 - Bolt, 3/4 x 5-1/2 GR8 (1)**
**117414 - Lock Nut, 3/4 GRC Unitorq (1)**

**573170 - Threaded Adjusting Assy (1)**
**118451 - Jam Nut, 1-1/2 GR2 (2)**
**118908 - Roll Pin, 3/8 x 2-1/4 (1)**

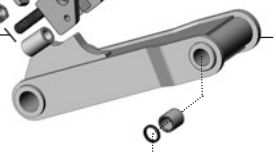

**575402 - End Wheel Strut - RH (1)**
**575401 - *End Wheel Strut - LH (1)***

***IMPORTANT** - Confirm End Wheel Strut & Hub/Spindle size before ordering parts)*

**575195 - Pin Shaft, 2 x 9-1/4 (1)**
**575194 - Pin Head (1)**
**118767 - Bolt, 7/8 x 3 GR8 (1)**
**118774 - Flat Washer, 7/8 - F436 (2)**
**117416 - Lock Nut, 7/8 Unitorque (1)**

End Wheel Strut Bushings & Seals *(both versions)*
**117225 - Bushing, 2-1/2 OD x 2-1/2 (2)**
**133135 - Wiper Seal, 2-1/2 OD (2)**

***Alternate** - Endwheel Strut, Hub/Spindle Components*
**575160 - End Wheel Strut - RH (1)**
**575161 - *End Wheel Strut - LH (1)***

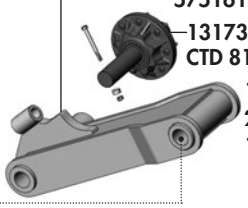

**131735 - Hub/Spindle Assembly CTD 817-2-1/2" (1)** mounts with...
**118721 - Bolt, 1/2 x 4-1/2 GR8 (1)**
**242982 - Bushing, Keeper (1)**
**118729 - Lock Nut, 1/2 (1)**

---

### 131616 - Hub/3" Spindle Assembly (2)

**Requires: 131776 - Wheel Nut, 5/8 -18 UNF (8)**
**Torque, 5/8 Wheel Nuts to:** 185-190 lb.ft (250-260 N.m)

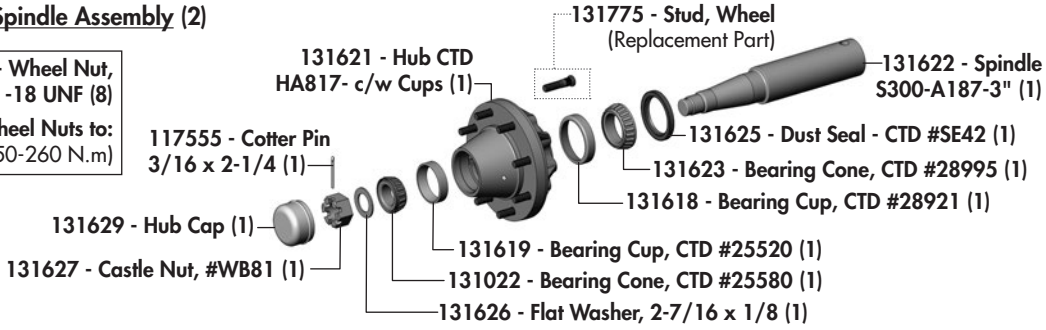

**131775 - Stud, Wheel** (Replacement Part)
**131621 - Hub CTD HA817- c/w Cups (1)**
**131622 - Spindle S300-A187-3" (1)**
**117555 - Cotter Pin 3/16 x 2-1/4 (1)**
**131625 - Dust Seal - CTD #SE42 (1)**
**131623 - Bearing Cone, CTD #28995 (1)**
**131618 - Bearing Cup, CTD #28921 (1)**
**131629 - Hub Cap (1)**
**131619 - Bearing Cup, CTD #25520 (1)**
**131627 - Castle Nut, #WB81 (1)**
**131022 - Bearing Cone, CTD #25580 (1)**
**131626 - Flat Washer, 2-7/16 x 1/8 (1)**

---

### *Alternate Hub/Spindle:*

### 131735 - Hub/2-1/2" Spindle Assembly (2)

**Requires: 131776 - Wheel Nut, 5/8 -18 UNF (8)**
**Torque, 5/8 Wheel Nuts to:** 185-190 lb.ft (250-260 N.m)

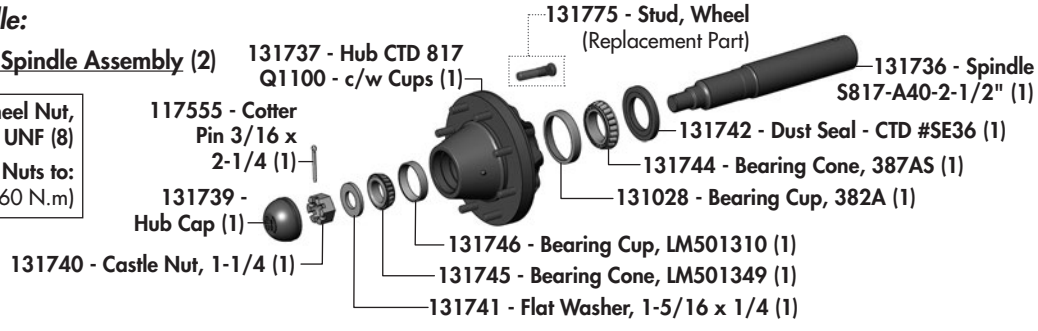

**131775 - Stud, Wheel** (Replacement Part)
**131737 - Hub CTD 817 Q1100 - c/w Cups (1)**
**131736 - Spindle S817-A40-2-1/2" (1)**
**117555 - Cotter Pin 3/16 x 2-1/4 (1)**
**131742 - Dust Seal - CTD #SE36 (1)**
**131744 - Bearing Cone, 387AS (1)**
**131739 - Hub Cap (1)**
**131028 - Bearing Cup, 382A (1)**
**131746 - Bearing Cup, LM501310 (1)**
**131740 - Castle Nut, 1-1/4 (1)**
**131745 - Bearing Cone, LM501349 (1)**
**131741 - Flat Washer, 1-5/16 x 1/4 (1)**

# Wing Frame Components

## Wing Frame Components

(*RH Wing Shown)*

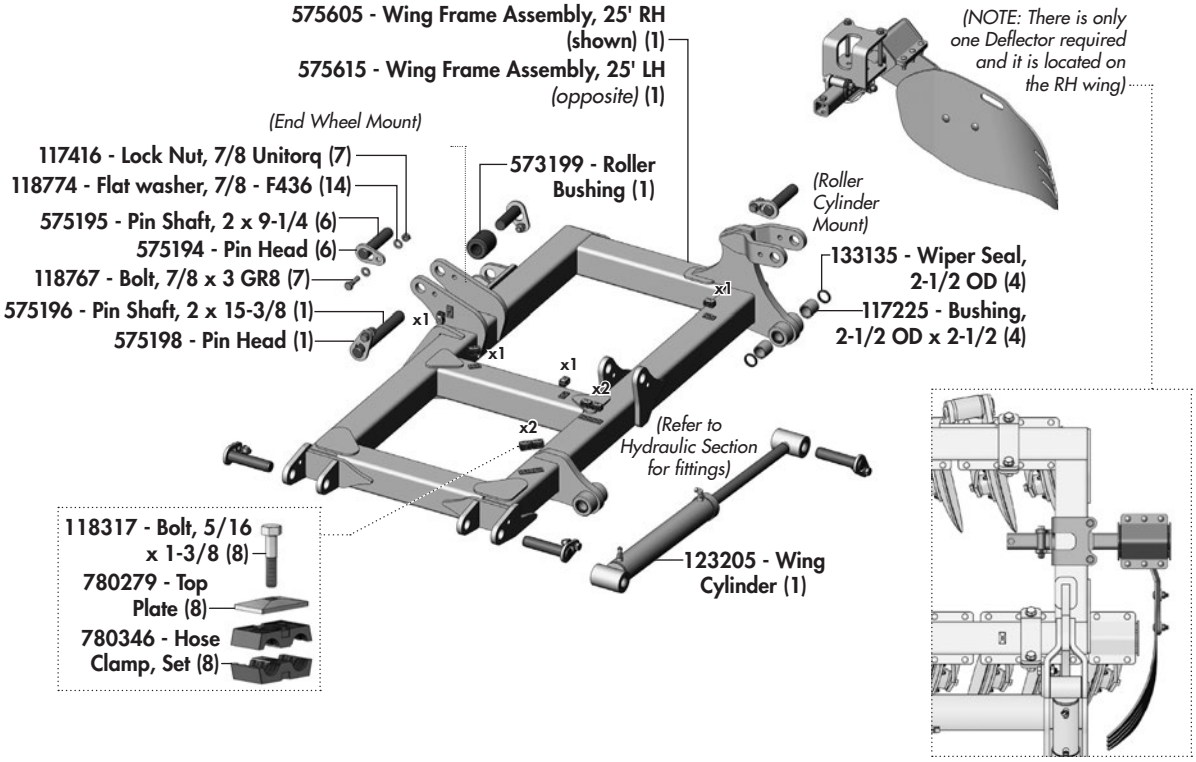


## Deflector Assembly Components

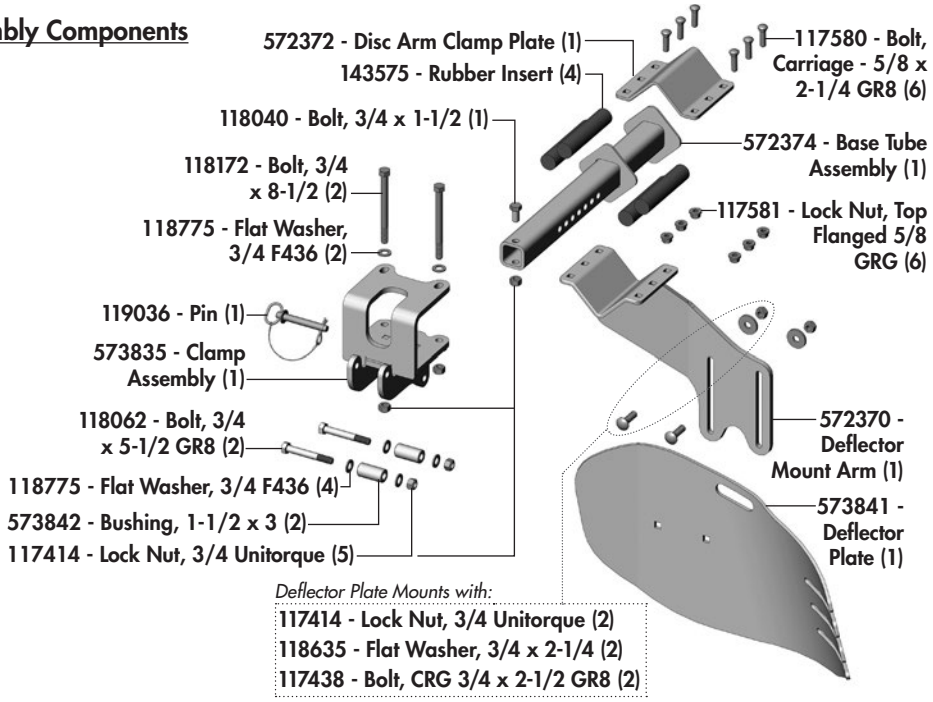

# PT25 - Disc Gang Components

## Pro-Till 25 Disc Gang Overview

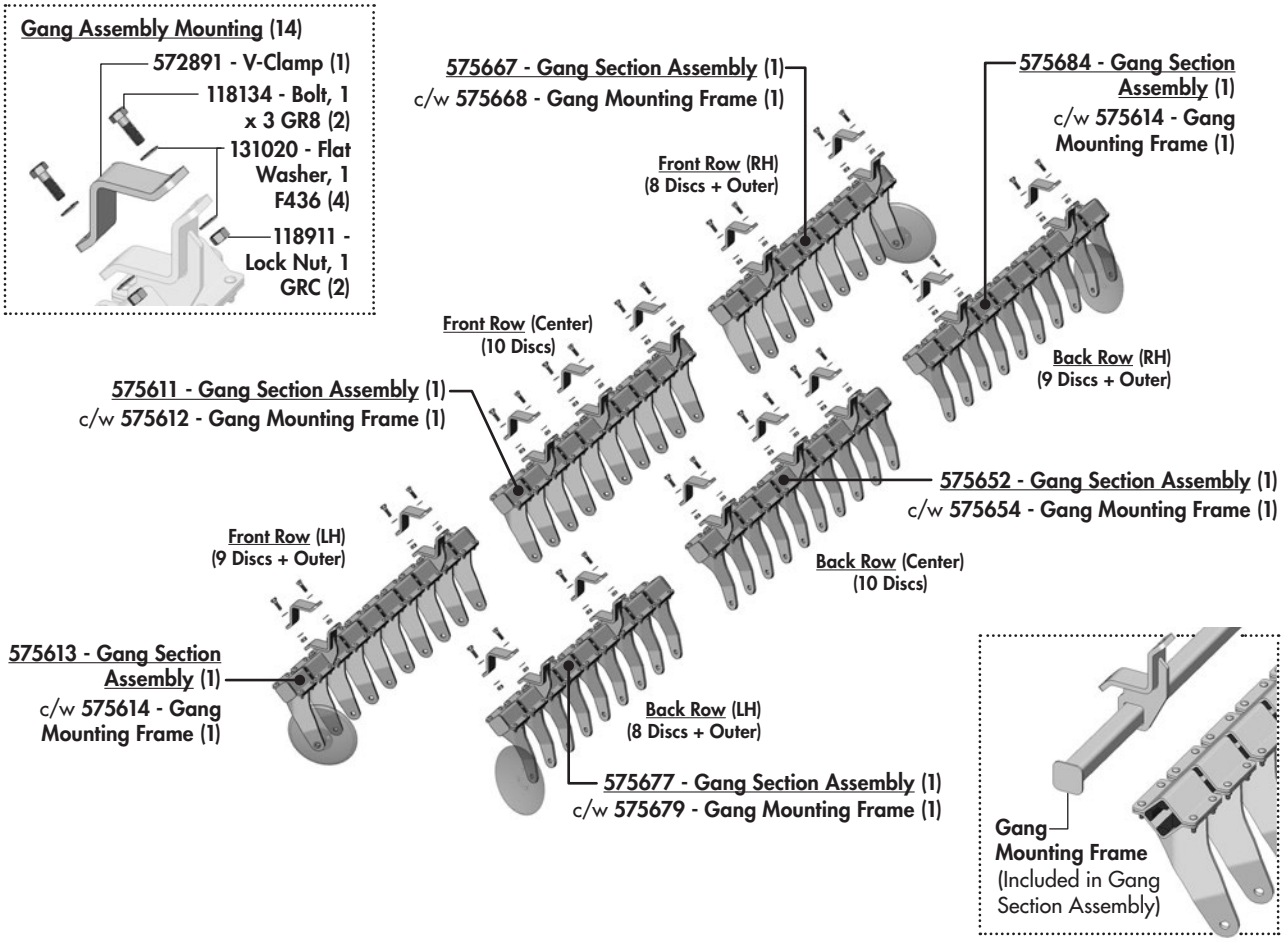


## Setting Gang Section Spacing - PT25

**STEP 1**

**20" Discs**
A: 6-11/16"
B: 2-9/16"
**-OR-**
**22" Discs**
A: 6-13/16"
B: 2-7/16"

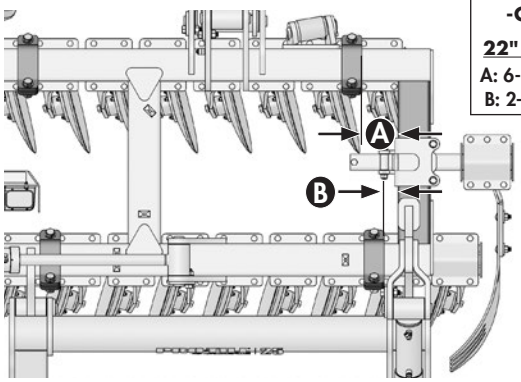


1. Gang section spacing starts by setting the distance from the inside RH Wing Frame to the edge of the first V-Clamp on front & rear gang sections.
   *(Measurements - **A** & **B** in diagram).*
2. Then, the distance between the *left* endcap of the first gang section and the *right* endcap of the next gang section should be set to 1-1/2". This should be the standard distance between all gang sections.

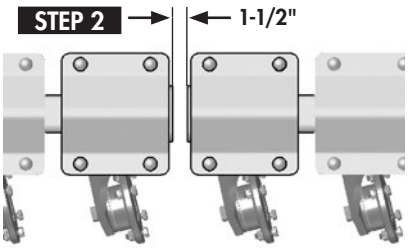

# PT25HD - Disc Gang Components

## Pro-Till 25HD Disc Gang Overview

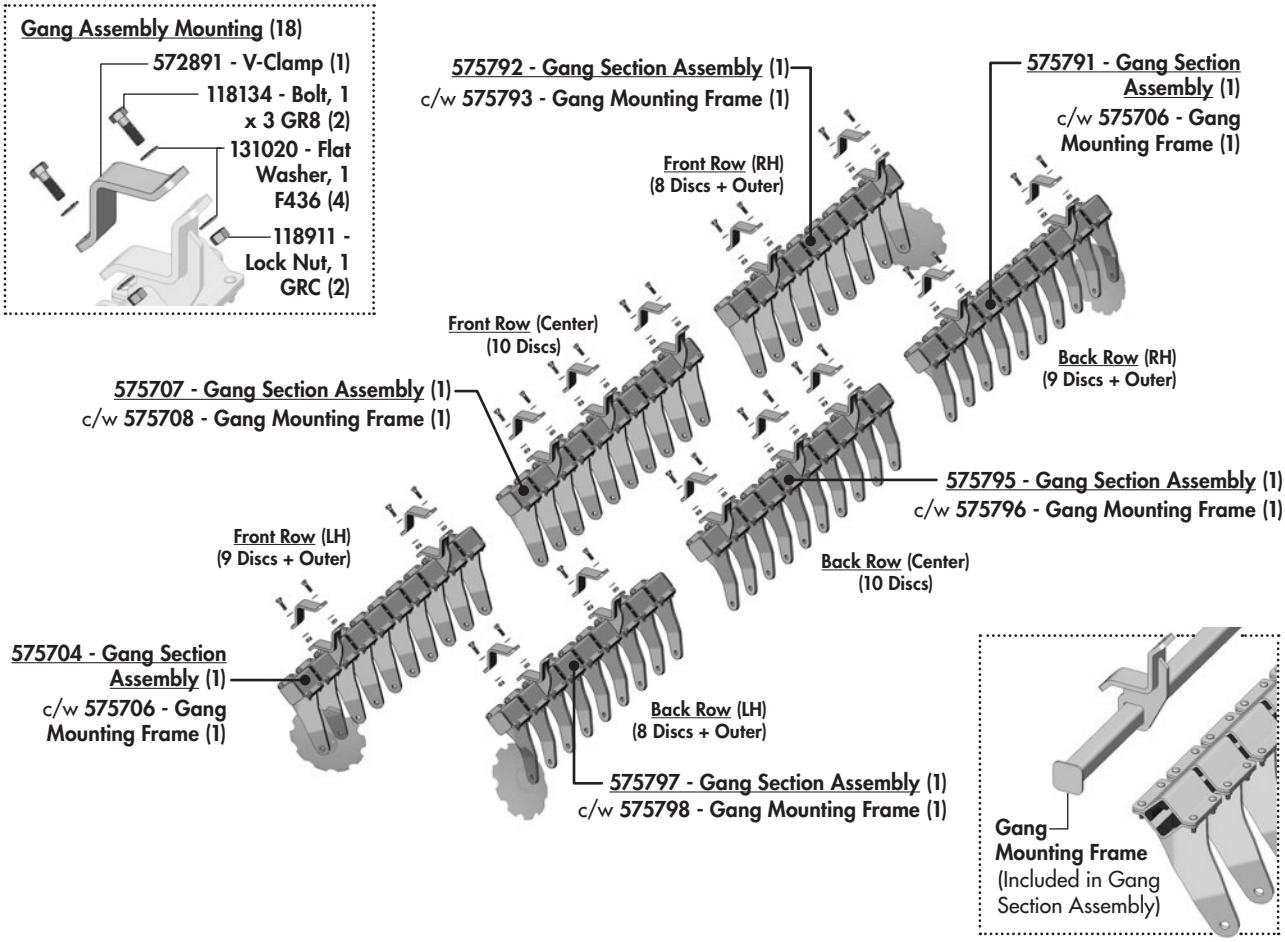


## Setting Gang Section Spacing - PT25HD

**STEP 1**

**22" Discs**
A: 6-13/16"
B: 2-9/16"
**-OR-**
**26" Discs**
A: 6-3/4"
B: 2-1/2"

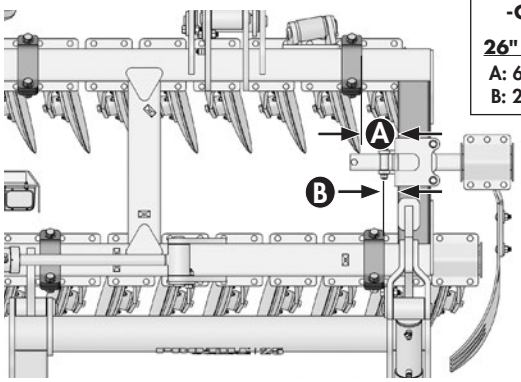


1. Gang section spacing starts by setting the distance from the inside RH Wing Frame to the edge of the first V-Clamp on front & rear gang sections.
   *(Measurements - **A** & **B** in diagram).*
2. Then, the distance between the *left* endcap of the first gang section and the *right* endcap of the next gang section should be set to 1-1/2". This should be the standard distance between all gang sections.

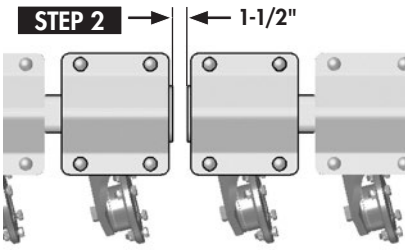

# PT25 - Disc Arm Components & Disc Options

## Front Row - Standard Disc Assembly Components

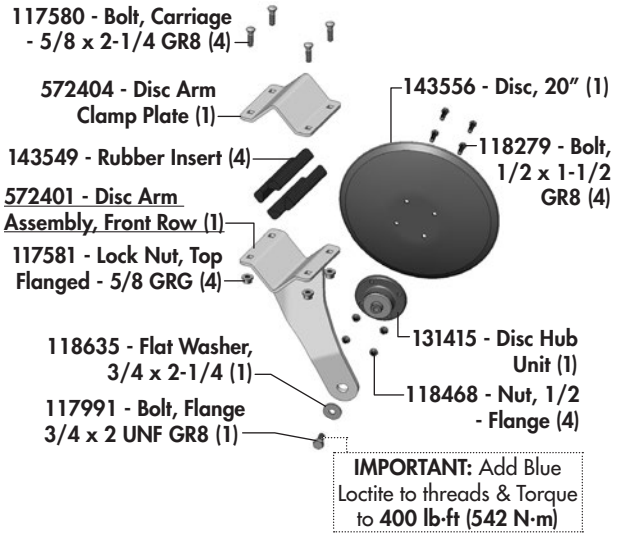


## Back Row - Standard Disc Assembly Components

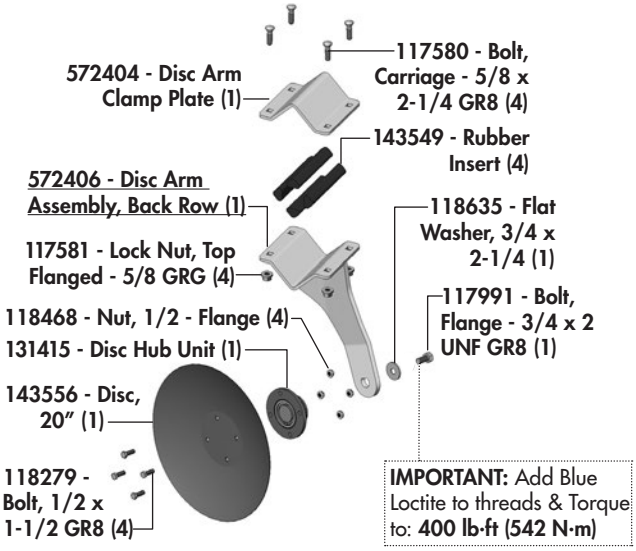


## Disc Hub Components

**131415 - Disc Hub Unit** (Varied Suppliers) - *Replacement O-Rings*

**INA - Markings**



**121080 - O-Ring, Nitrile M6x88 (1)**

**SKF - Markings**



**121082 - O-Ring, Nitrile M5.3x87.5 (1)**

## Discs/Hubs - Required Numbers Per Machine

Pro-Till **25** requires: **58** Discs/Hubs

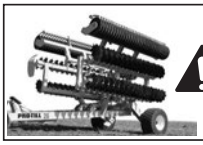

**IMPORTANT:** *Safely secure Pro-Till in winged forward transport position when changing or servicing discs.*

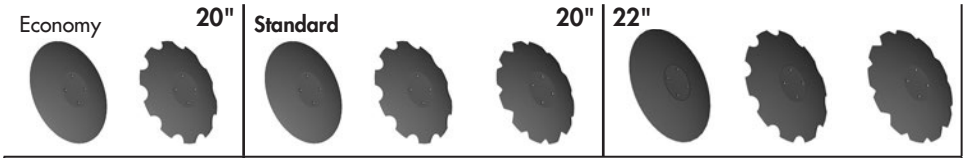


| Economy Discs | | Premium Discs | | | | | |
|---|---|---|---|---|---|---|---|
| 20" Straight | 20" *Notched* | 20" Straight | 20" *Notched* | 20" *Double-V Notched* | 22" Straight | 22" *Notched* | 22" *Double-V Notched* |
| *143567* | *143568* | *143556* | *143557* | *143553* | *143562* | *143563* | *143566* |

**Typical Factory Settings of End Discs**

**20" Disc Option**

*143550* - **18"** End Disc - Straight **(1)**

*Located as outer disc on rear RH corner only.*

**22" Disc Option**

*143556* - **20"** End Disc - Straight **(1)**

*Located as outer disc on rear RH corner only.*

(**Note**: Customers may wish to adjust the end disc sizes and locations for customer preferred performance in certain soil or field conditions.)

# PT25HD - Disc Arm Components & Disc Options

## Front Row - Standard Disc Assembly Components

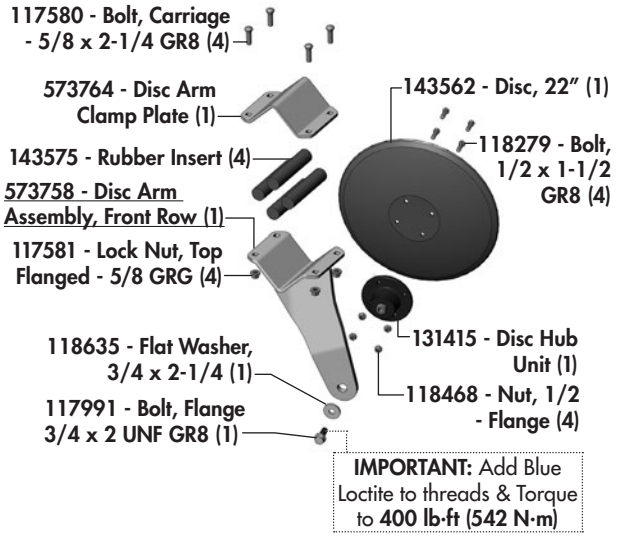


## Back Row - Standard Disc Assembly Components

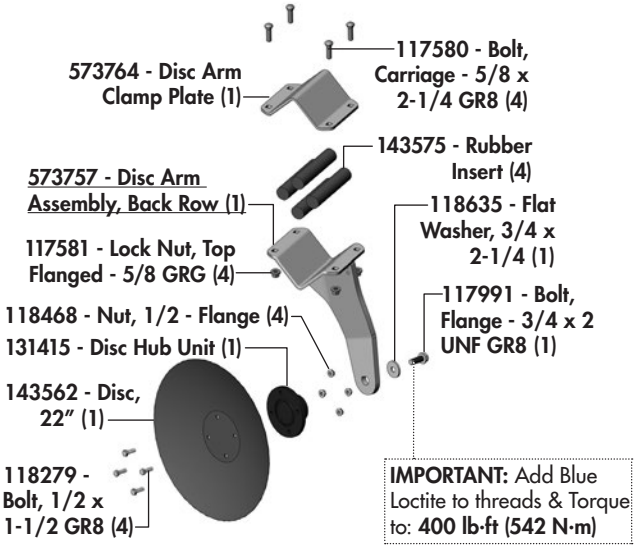


## Disc Hub Components

**131415 - Disc Hub Unit** - *Replacement O-Rings*

**SKF - Markings**



**121082 - O-Ring, Nitrile M5.3x87.5 (1)**

## Discs/Hubs - Required Numbers Per Machine

Pro-Till **25HD** requires: **58** Discs/Hubs

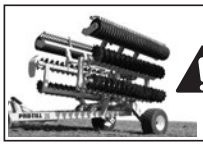

**IMPORTANT:** *Safely secure Pro-Till in winged forward transport position when changing or servicing discs.*

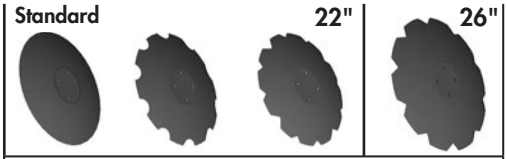


| Premium Discs | | | |
|---|---|---|---|
| *22" Straight* | *22" Notched* | *22" Double-V Notched* | *26" Double-V Notched* |
| *143562* | *143563* | *143566* | *143577* |

### Typical Factory Settings of End Discs

**22" Disc Option**

*143556* - **20"** End Disc - Straight **(1)**
*Located as outer disc on rear RH corner only.*

**26" Disc Option**

*143566* - **22"** End Disc - Double-V **(1)**
*Located as outer disc on rear RH corner only.*

(**Note**: Customers may wish to adjust the end disc sizes and locations for customer preferred performance in certain soil or field conditions.)

# Roller Mounting Frame Components

## Roller Location Overview - 2.5m

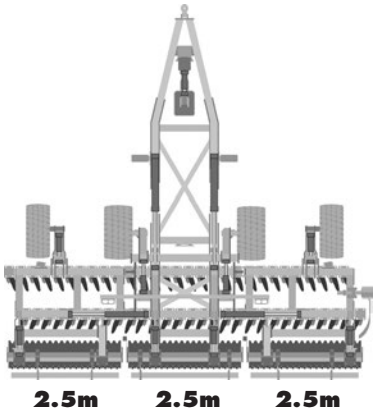


## Single Roller Ridge Wiper Components

*Knocks down the possible ridge of dirt left from buildup in-between the rollers.*

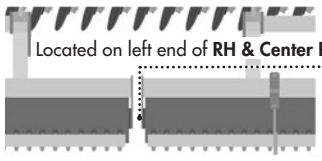


Initially set to highest setting as shown then adjust lower as necessary until desired results are achieved. **Note:** *Setting too low can result in a trench or possibly cause plugging.*

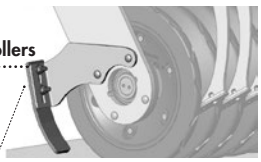

**573385 - Ridge Wiper Kit (1)**

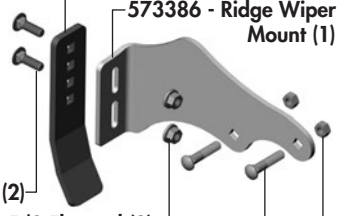

**573387 - Ridge Wiper (1)**

**573386 - Ridge Wiper Mount (1)**

**118221 - Bolt, CRG 5/8 x 2 (2)**

**117581 - TopLock Nut, 5/8 Flanged (2)**

**117460 - Bolt, CRG 5/8 x 3 GR8 (2)**

**118447 - Lock Nut, 5/8 Unitorque (2)**

## Mounting Frame to Roller Frame Installation for SINGLE ROLLERS

*1. Center the Roller Frame with center of Mounting Frame during install.*

*2. When installing LH and RH roller frames, use a distance of 3-3/4" between the end of the previously installed center frame and the end of the LH/RH roller frame being positioned.*

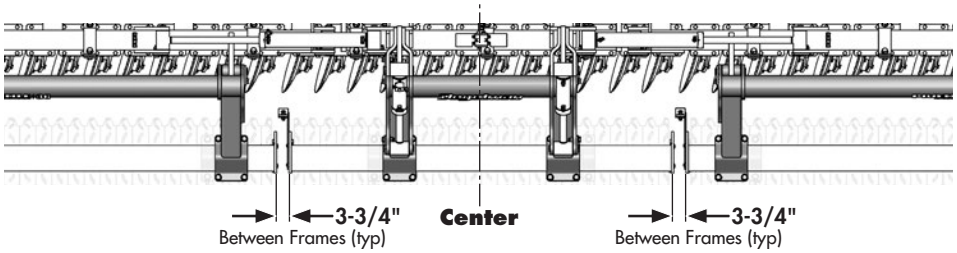


## Mounting Frame to Roller Frame Installation for DOUBLE CAGE ROLLERS

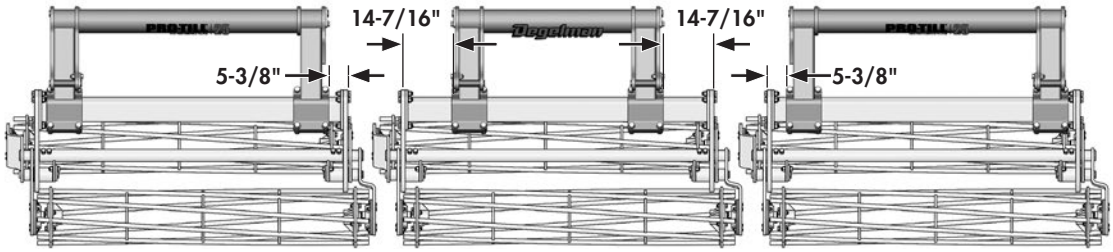

# Roller Mounting Frame Components

## Center Roller Mounting Frame Components

Pro-Till 25

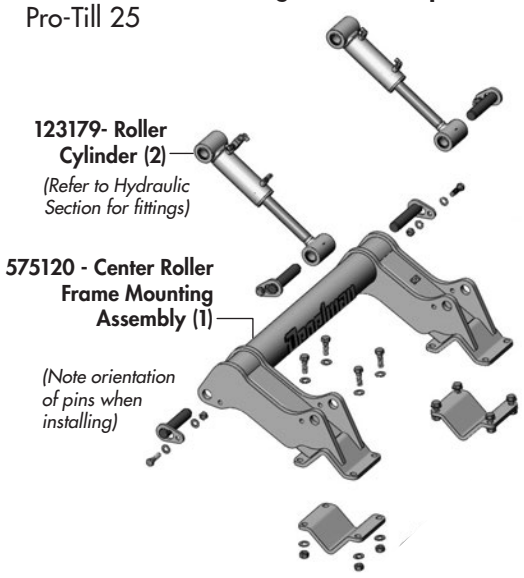


## Common Roller Frame Components

*Note: Pin orientations differ on each section (LH, RH, & Center), refer to component overviews.*

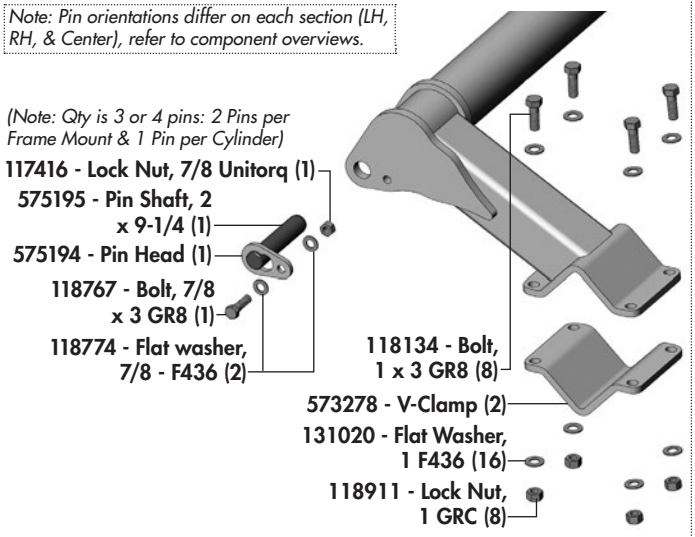


## LH & RH Roller Mounting Frame Components

Pro-Till 25

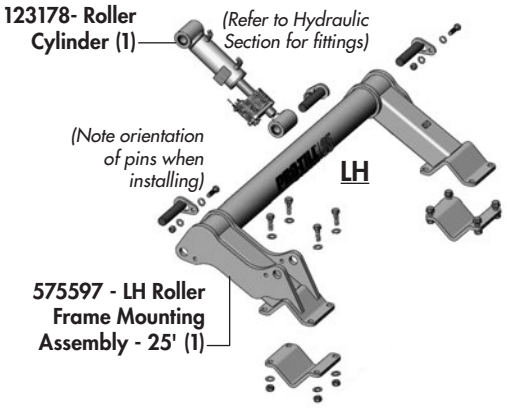


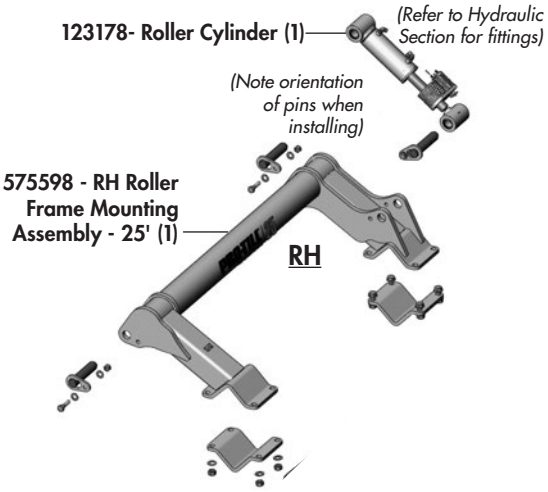

# Single Roller & Roller Frame Assemblies

## Roller Assembly Overview

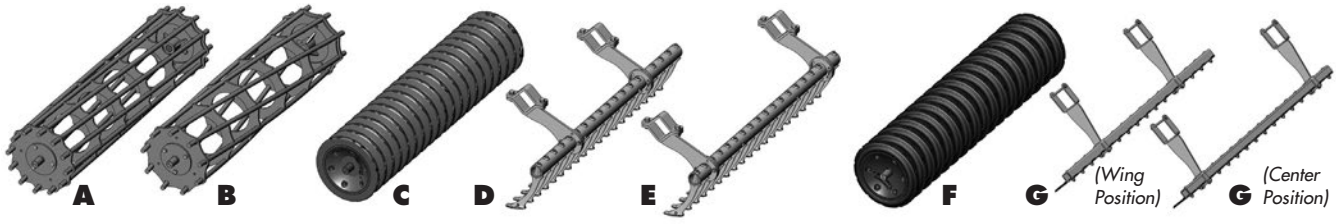


*Cage Rollers*

**A** 12 Bar Cage Roller
572430 - Cage Roller Assembly, 12-Bar 2.5m (1)

**B** 9 Bar Cage Roller
572477 - Cage Roller Assembly, 9 Bar 2.5m (1)

*LSTX Rollers*

**C** LSTX Rubber Roller
131844 - Rubber Roller Assembly, LSTX 2.5m (1)

**D** LSTX Scraper, Wing
575578 - Wing, Scraper Assembly LSTX 2.5m (1)

**E** LSTX Scraper, Center
573465 - Center, Scraper Assembly LSTX 2.5m (1)

*LSTXE Rollers*

**F** LSTXE Rubber Roller
131907 - Rubber Roller Assembly, LSTXE 2.5m (1)

**G** LSTXE Rock Ejector
575801 - Rock Ejector Assy LSTXE 2.5m (1)

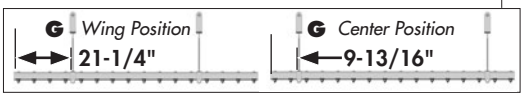


## Roller Frame Components

**Cage, LSTX & LSTXE Rollers**
575589 - Bolted Roller Frame - 2.5m (1)

**LSTXE ONLY:** These shims *(one per side)* are ***only used with*** **LSTXE Rollers.**
***575789*** - 1-1/2" Shims (2) for 2.5m Rollers
Uses: ***117575 - Bolt, 7/8 x 4-1/2 GR8 (8)***

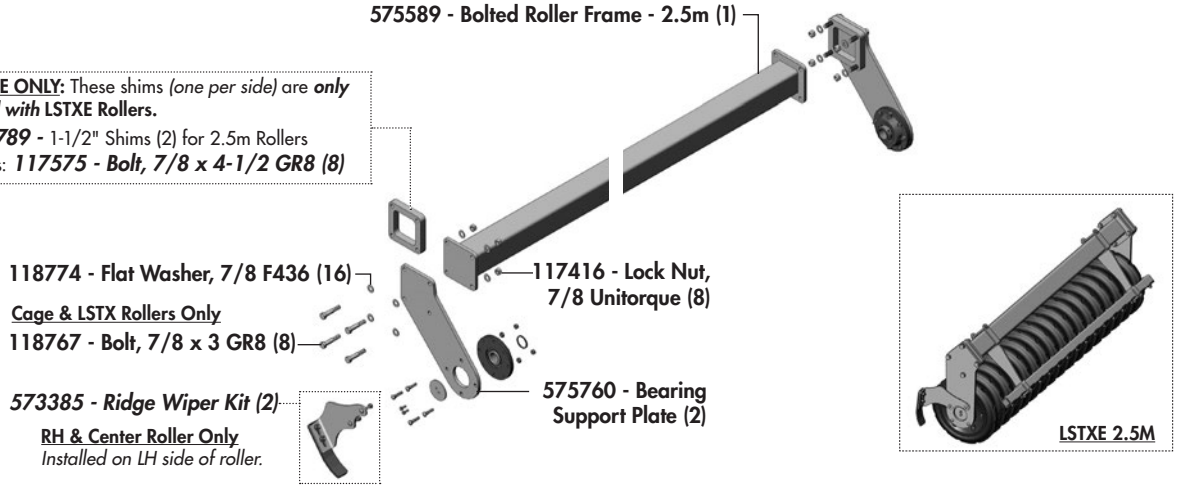

# Single Roller Part Components

## Roller Bearing Components - Common

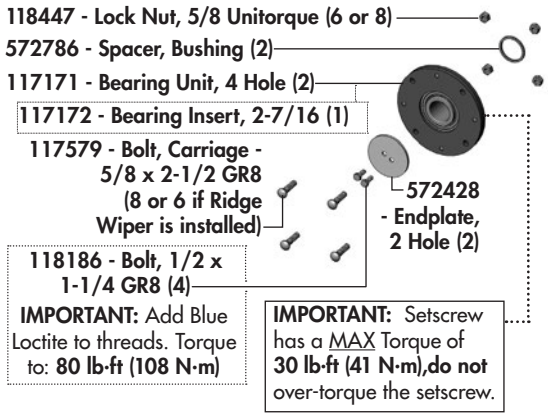


## Cage Roller Part Components

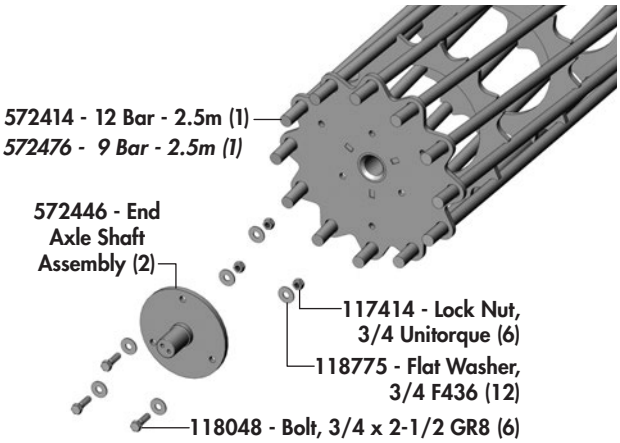


## Rubber Roller Assemblies

**LSTX** Roller Assembly

131844 - 2.5m (1)



**LSTXE** Roller Assembly

131907 - 2.5m (1)



## Rubber Roller Assembly Common End Components

131896 - Repair Toolkit (1)
*(required for removal of endplate)*

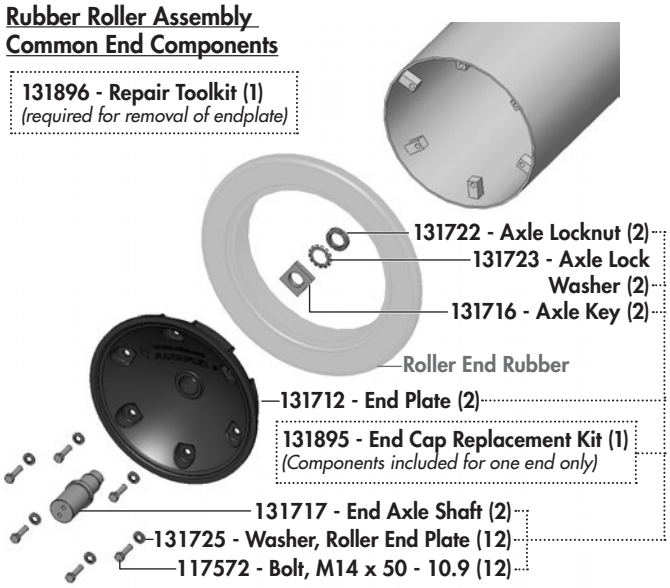


## **LSTX** Roller Component Overview




## **LSTXE** Roller Component Overview



# Scraper / Rock Ejector Components

## LSTX Scraper 2.5m Section Component Overview

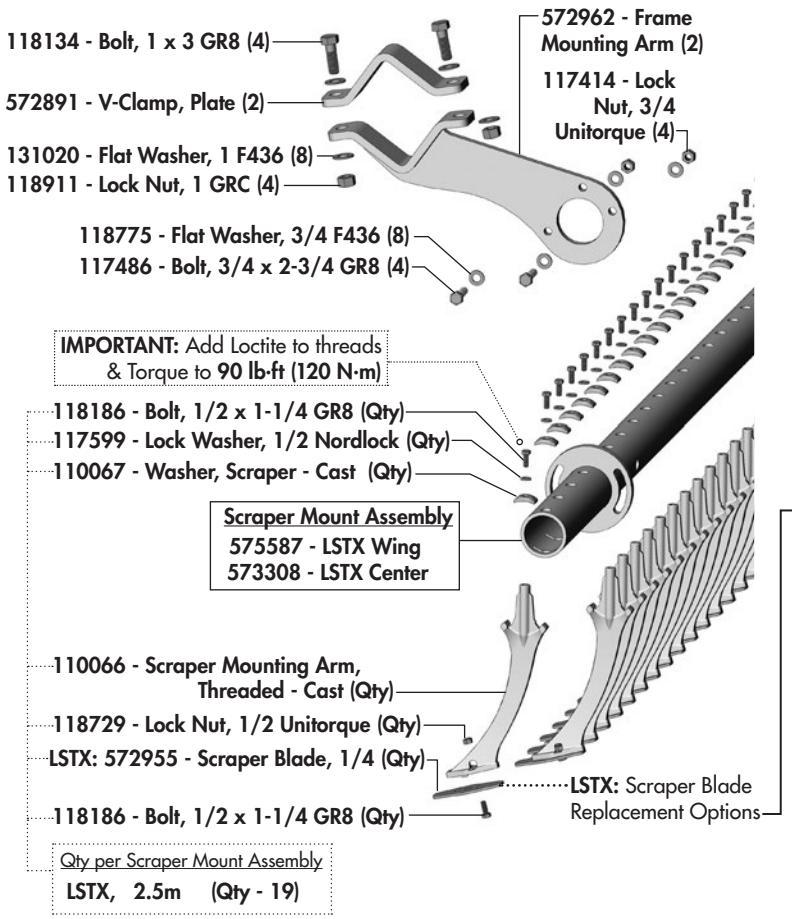


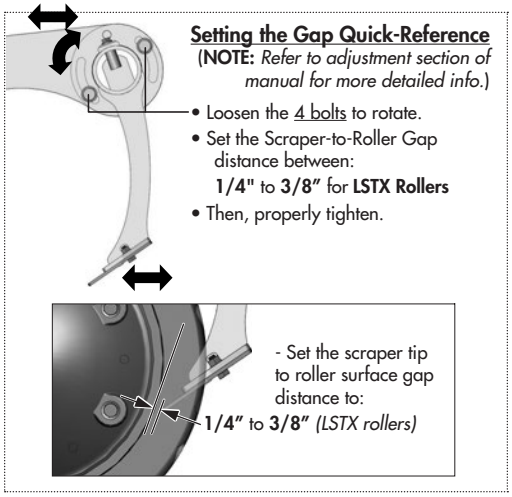


**LSTX - Scraper Blades**

**Max-Life LSTX Blade Kits**

- *requires* new hardware (*locknuts*).

**LSTX - 25' Quantity** (57)

**572957 - Scraper Blade, Max-Life - 1/4**

*mounts with:*

**118186 - Bolt, 1/2 x 1-1/4 GR8**

**118729 - Lock Nut, 1/2 Unitorque**

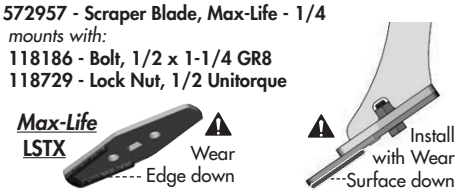


## LSTXE Rock Ejector 2.5m Section Component Overview

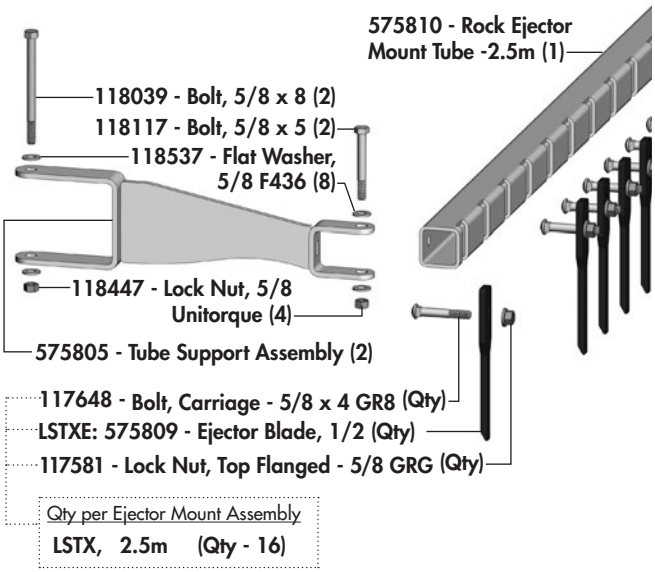


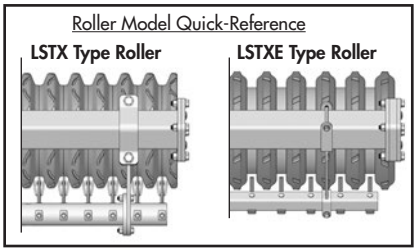


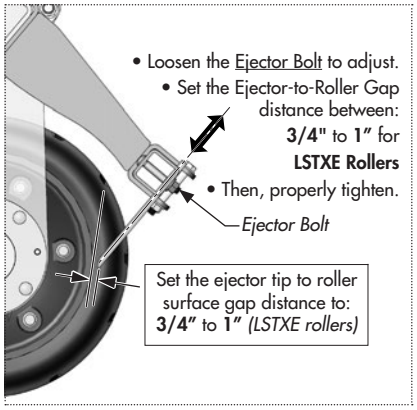

# Double Cage Roller Component & Frame Assemblies

## Roller Assembly Overview

*Double Cage Rollers* PT25

2.5M Double Cage Roller (3)



## Double Cage Roller Frame Components

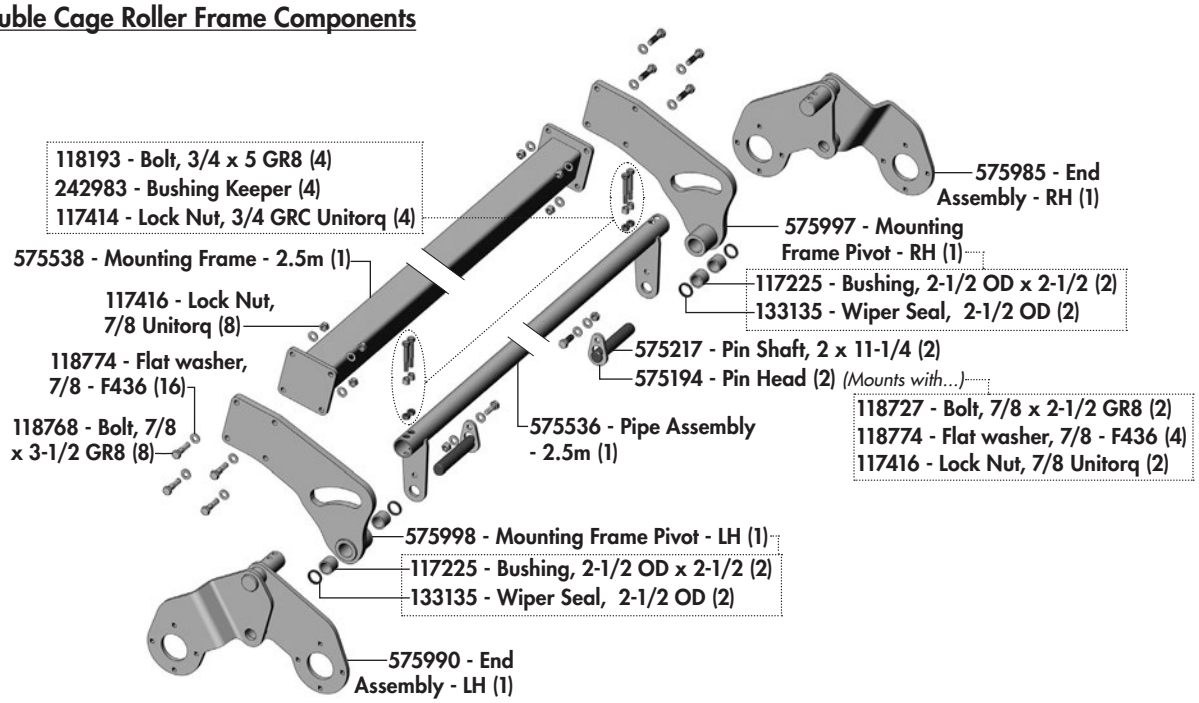


## Common Roller Bearing Components

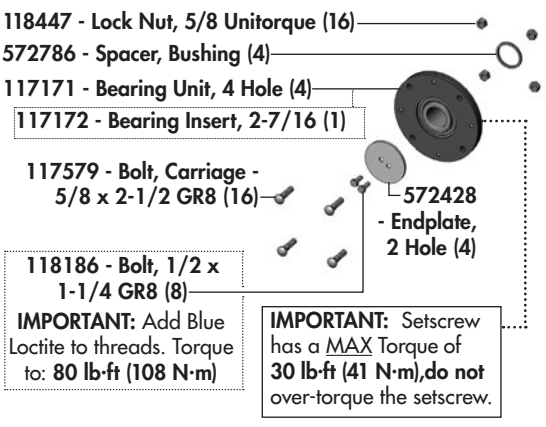


## Double Cage Roller Part Components

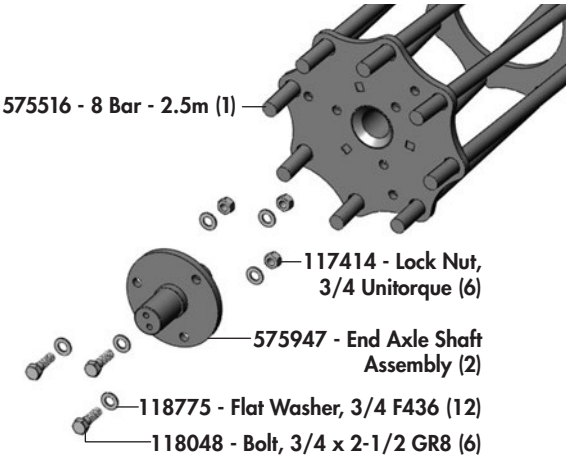

# Hydraulic Layout - 1 - Wheels

**Hydraulic Fittings Required**

| | | | |
|---|---|---|---|
| 1 | 141581 - Coupler Tip, 3/4 ORB F | (2) | |
| 2 | 141703 - Adaptor, 1/2 ORB M x ORFS M | (4) | |
| 3 | 141830 - Coupler, Green (+) | (1) | |
| 4 | 141831 - Coupler, Green (-) | (1) | |
| 5 | 141707 - Tee, 1/2 ORFS M x M x 1/2 ORB M-adj | (1) | |
| 6 | 141704 - Elbow, 90° 1/2 ORB M x ORFS M | (9) | |
| 7 | 141706 - Tee, 1/2 ORFS M | (2) | |
| 8 | 141735 - Hydraulic Check Valve | (1) | |
| 9 | 141679 - Nipple, 3/4 ORB m x 3/4 ORB m-adj | (1) | |
| 10 | 141711 - 90° Elbow, 1/2 ORFS M x 9/16 ORB M | (1) | |
| 11 | 126755 - Hose, 1/2 x 8 - 1/2 ORFS F-SW-1 EL | (1) | |
| 12 | 126702 - Wrap, Hose/Cable - 24" | (2) | |

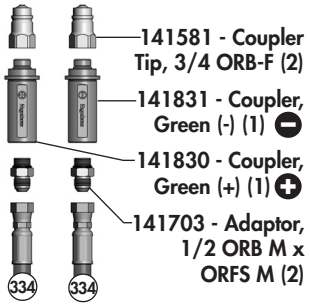


**Required Hoses for Wheel Cylinders**

| | | |
|---|---|---|
| 334 | 126457 - Hose, 3/8 x 334 | (2) |
| 218 | 126453 - Hose, 3/8 x 218 | (1) |
| 168 | 126809 - Hose, 3/8 x 168 | (2) |
| 158 | 126450 - Hose, 3/8 x 158 | (1) |
| 99 | 126820 - Hose, 3/8 x 99 | (1) |
| 30 | 126815 - Hose, 3/8 x 30 | (1) |

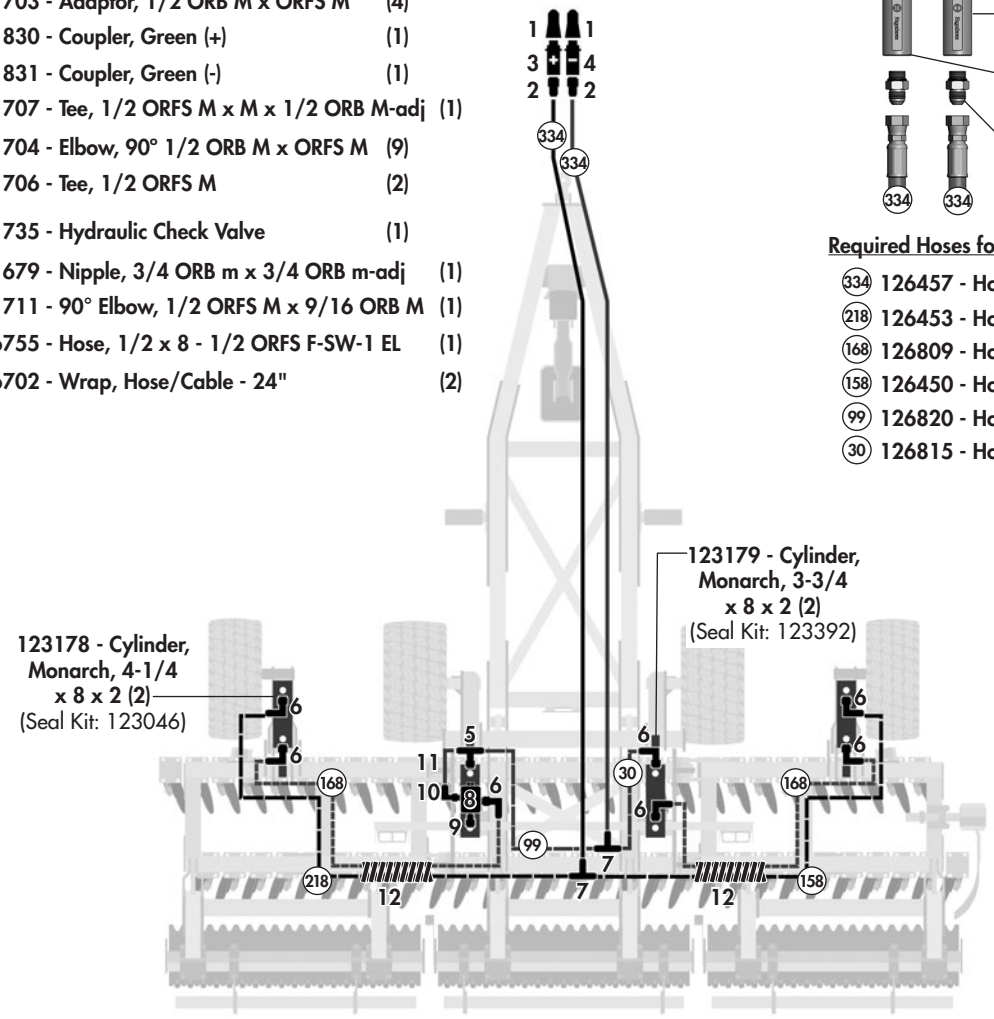


**Detail A - RH Outer Wheel Cylinder General Overview** (LH Opposite)

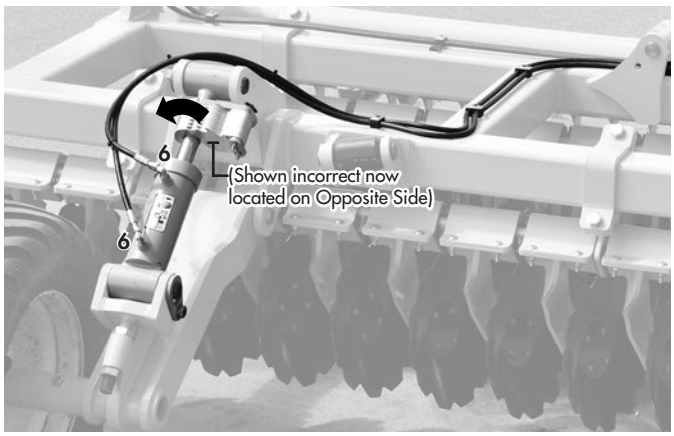


**Detail B - RH Wheel Cylinder Hydraulic Lock Kit**

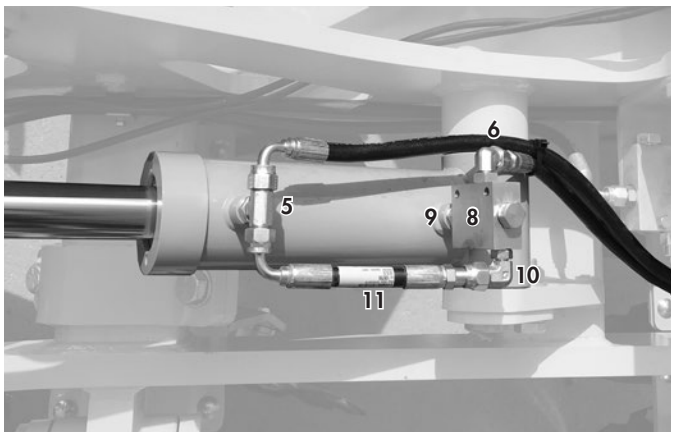

# Hydraulic Layout - 2 - Rollers

**Hydraulic Fittings Required**

| | | | |
|---|---|---|---|
| 1 | 141581 - Coupler Tip, 3/4 ORB F | (2) | |
| 2 | 141703 - Adaptor, 1/2 ORB M x ORFS M | (2) | |
| 3 | 141832 - Coupler, Blue (+) | (1) | |
| 4 | 141833 - Coupler, Blue (-) | (1) | |
| 5 | 141707 - Tee, 1/2 ORFS M x M x 1/2 ORB M-adj | (1) | |
| 6 | 141704 - Elbow, 90° 1/2 ORB M x ORFS M | (7) | |
| 7 | 141706 - Tee, 1/2 ORFS M | (2) | |
| 8 | 141735 - Hydraulic Check Valve | (1) | |
| 9 | 141679 - Nipple, 3/4 ORB m x 3/4 ORB m-adj | (1) | |
| 10 | 141711 - 90° Elbow, 1/2 ORFS M x 9/16 ORB M | (1) | |
| 11 | 126755 - Hose, 1/2 x 8 - 1/2 ORFS F-SW-1 EL | (1) | |

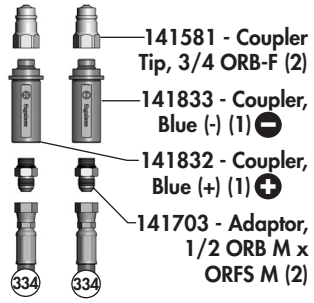


**Required Hoses for Roller Cylinders**

| | | |
|---|---|---|
| 334 | 126457 - Hose, 3/8 x 334 | (2) |
| 202 | 126452 - Hose, 3/8 x 202 | (1) |
| 168 | 126809 - Hose, 3/8 x 168 | (2) |
| 138 | 126808 - Hose, 3/8 x 138 | (1) |
| 87 | 126819 - Hose, 3/8 x 87 | (1) |
| 40 | 126817 - Hose, 3/8 x 40 | (1) |

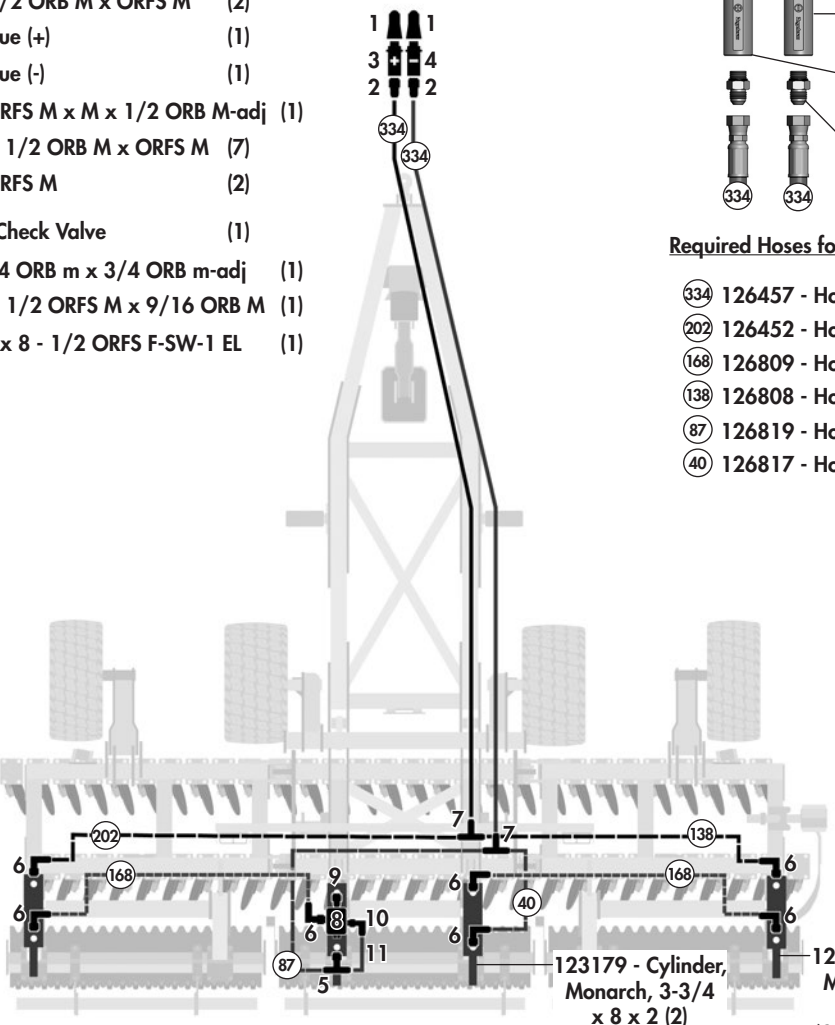


**Detail A - LH Roller Cylinder General Overview**

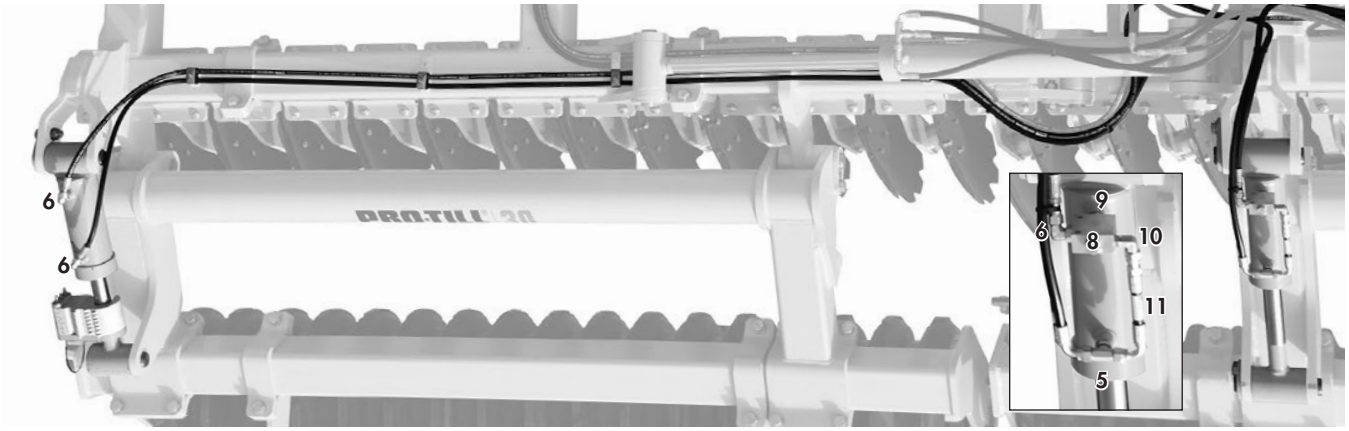

# Hydraulic Layout - 3 - Transport

**Hydraulic Fittings Required**

| | | | |
|---|---|---|---|
| 1 | | 141581 - Coupler Tip, 3/4 ORB F | (2) |
| 2 | | 141703 - Adaptor, 1/2 ORB M x ORFS M | (2) |
| 3 | | 141834 - Coupler, Brown (+) | (1) |
| 4 | | 141835 - Coupler, Brown (-) | (1) |
| 5 | | 141707 - Tee, 1/2 ORFS M x M x 1/2 ORB M-adj | (2) |
| 6 | | 141704 - Elbow, 90° 1/2 ORB M x ORFS M | (2) |

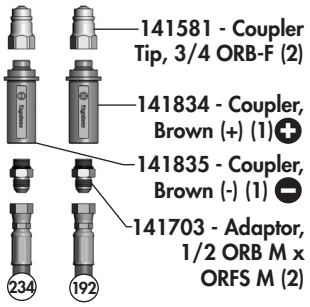


**Required Hoses for Transport Cylinders**

| | |
|---|---|
| (234) | 126455 - Hose, 3/8 x 234 (1) |
| (192) | 126454 - Hose, 3/8 x 192 (1) |
| (187) | 126822 - Hose, 3/8 x 187 (1) |
| (99) | 126820 - Hose, 3/8 x 99 (1) |

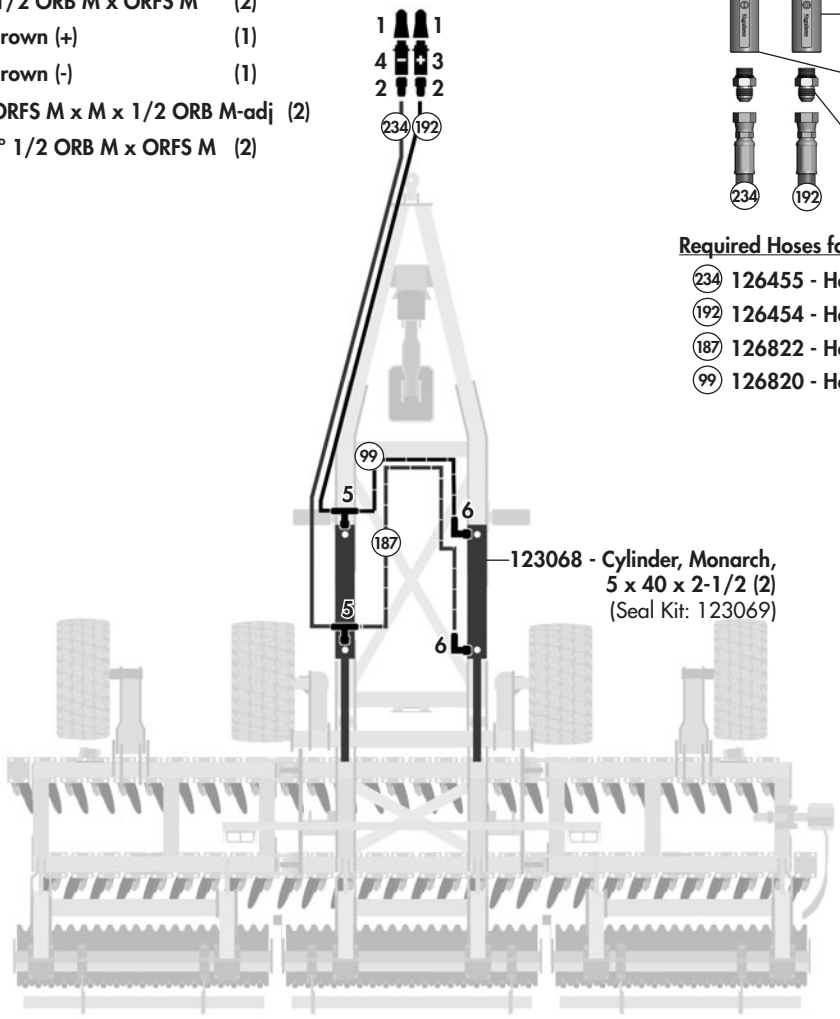


**Detail A - Transport Cylinders General Overview**



# Hydraulic Layout - 4 - Wings

Hydraulic Fittings Required

| | | | |
|---|---|---|---|
| 1 | | 141581 - Coupler Tip, 3/4 ORB F | (2) |
| 2 | | 141703 - Adaptor, 1/2 ORB M x ORFS M | (8) |
| 3 | | 141836 - Coupler, Black (+) | (1) |
| 4 | | 141837 - Coupler, Black (-) | (1) |
| 5 | | 122668 - Orifice, 3/4-16 UNF | (2) |
| 6 | | 141704 - Elbow, 90° 1/2 ORB M x ORFS M | (2) |
| 7 | | 141707 - Tee, 1/2 ORFS M x M x 1/2 ORB M-adj | (2) |
| 8 | | 141740 - Valve, Reducing Relieving | (1) |
| 9 | | 141741 - Pressure Gauge | (1) |
| 10 | | 141727 - Tee, 1/2 ORFS M x F-SW x M | (1) |
| 11 | | 141711 - 90° Elbow, 1/2 ORFS M x 9/16 ORB M | (1) |
| 12 | | 141715 - 90° Elbow, 1/2 ORFS M x F-SW | (1) |
| 13 | | 141524 - Relief Valve, 2000 PSI - 3/4 ORB | (1) |

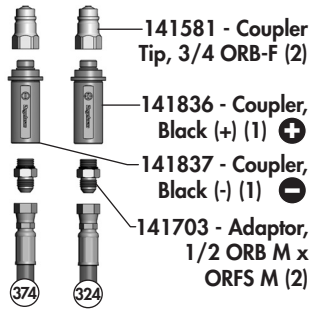


Required Hoses for Wing Cylinders

| | | | |
|---|---|---|---|
| 374 | 126458 - Hose, 3/8 x 374 | (1) |
| 324 | 126456 - Hose, 3/8 x 324 | (1) |
| 66 | 126818 - Hose, 3/8 x 66 | (2) |
| 52 | 126807 - Hose, 3/8 x 52 | (1) |
| 40 | 126817 - Hose, 3/8 x 40 | (2) |
| 26 | 126814 - Hose, 3/8 x 26 | (1) |

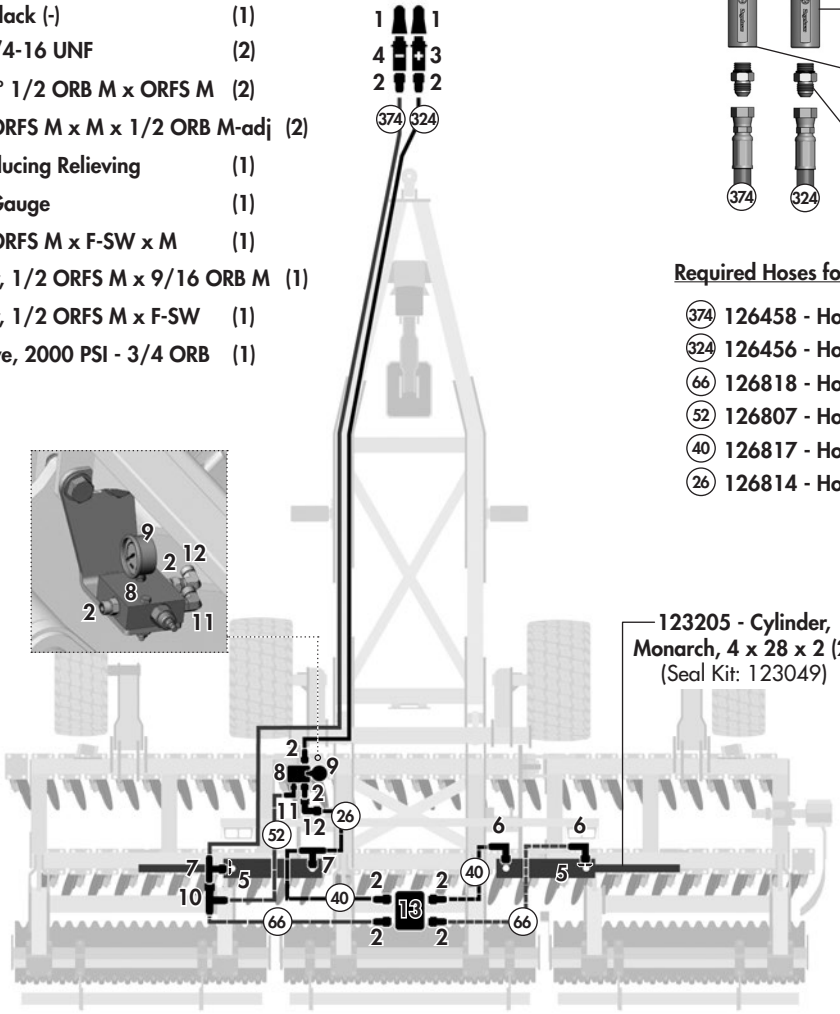


Detail A - Transport Cylinders General Overview

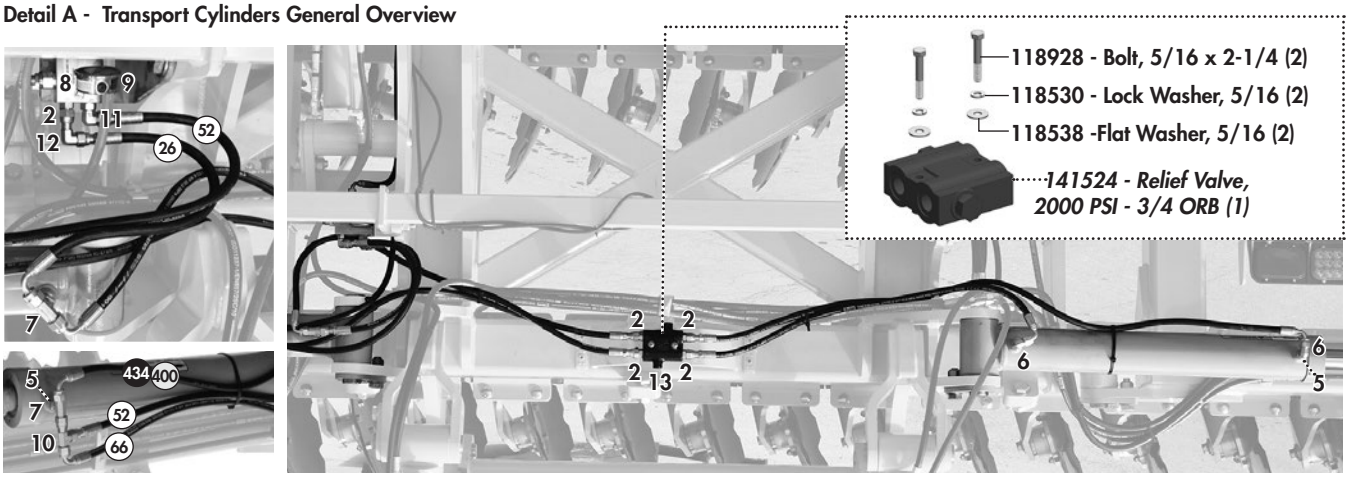

# Hydraulic Layout - 5 - Jack

**Hydraulic Fittings Required**

| | | |
|---|---|---|
| 1 | 141581 - Coupler Tip, 3/4 ORB F | (2) |
| 2 | 141703 - Adaptor, 1/2 ORB M x ORFS M | (4) |
| 3 | 141838 - Coupler, Grey (+) | (1) |
| 4 | 141839 - Coupler, Grey (-) | (1) |
| 5 | 141597 - Ball Valve - 3/4 ORB F | (1) |
| 6 | 141704 - Elbow, 90° 1/2 ORB M x ORFS M | (1) |
| 7 | 141705 - Elbow, 90° 1/2 ORB M x ORFS F-SW | (1) |
| 8 | 122668 - Orifice, 3/4-16 UNF | (1) |

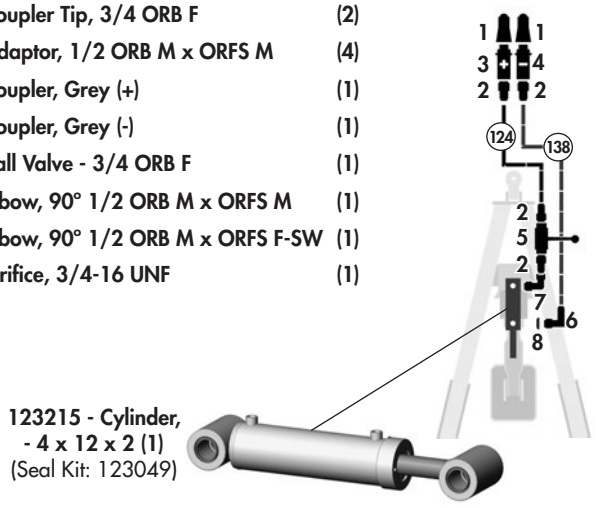


123215 - Cylinder,
- 4 x 12 x 2 (1)
(Seal Kit: 123049)

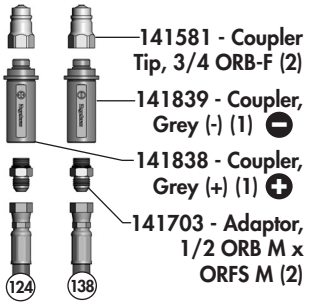


**Required Hoses for Jack Cylinder**

(124) 126821 - Hose, 3/8 x 124 (1)
(138) 126808 - Hose, 3/8 x 138 (1)

**Jack / Ball Valve Connection Detail**




**⚠ IMPORTANT:**
Close the ball valve to prevent accidental operation of this circuit. Ensure ball valve handle remains in closed position.

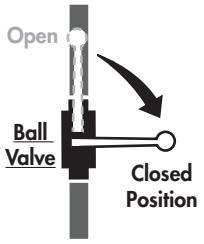


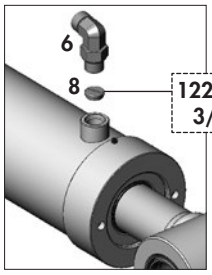

# Hydraulic Schematic

| Reference Number Information | |
|---|---|
| (1) **123215 - Cylinder, 4 x 12 x 2** (Seal Kit 123049) | **(1)** |
| (2) **122668 - Orifice, 3/4-16 UNF** | **(3)** |
| (3) **141597 - Ball Valve - 3/4 ORB F** | **(1)** |
| (4) **141581 - Coupler Tip, 3/4 ORB F** | **(10)** |
| (5) **123068 - Cylinder, 5 x 40 x 2-1/2** (Seal Kit 123069) | **(2)** |
| (6) **141740 - Valve, Reducing Relieving** | **(1)** |
| (7) **141741 - Pressure Gauge** | **(1)** |
| (8) **141524 - Relief Valve, 2000 PSI - 3/4 ORB** | **(1)** |
| (9) **141735 - Valve, P.O. Check Valve** | **(2)** |
| (10) **123205 - Cylinder, 4 x 28 x 2** (Seal Kit 123049) | **(2)** |
| (11) **123179 - Cylinder, 3-3/4 x 8 x 2** (Seal Kit 123392) | **(4)** |
| (12) **123178 - Cylinder, 4-1/4 x 8 x 2** (Seal Kit 123046) | **(4)** |

**WHEEL/DEPTH CIRCUIT**

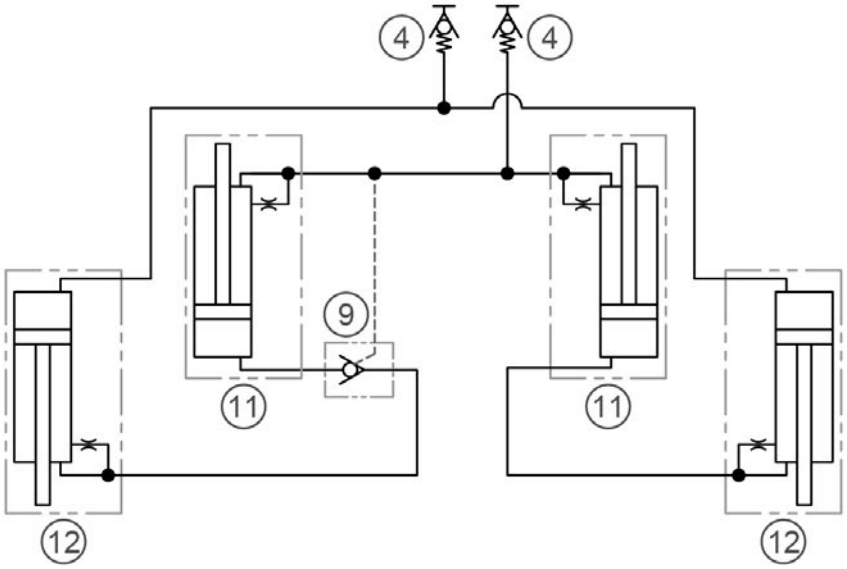


**ROLLER/DEPTH CIRCUIT**

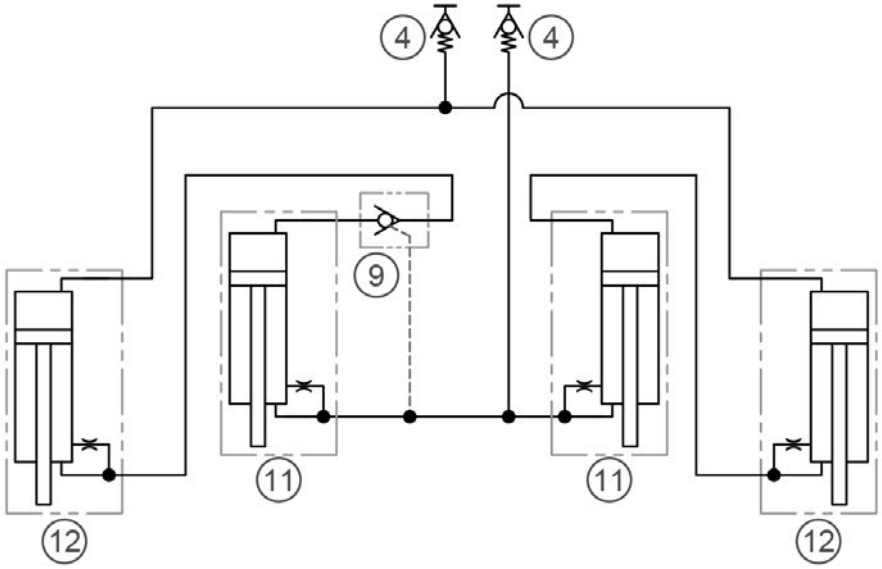

# Hydraulic Schematic

**WING CIRCUIT**

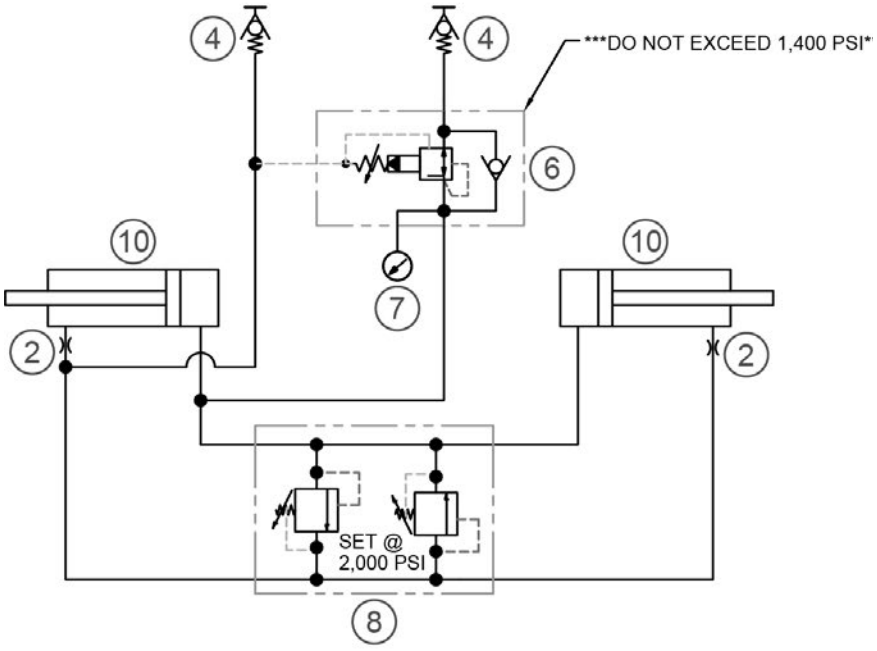


**TRANSPORT CIRCUIT**

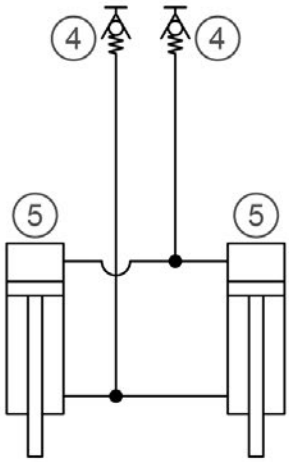


**JACK CIRCUIT**

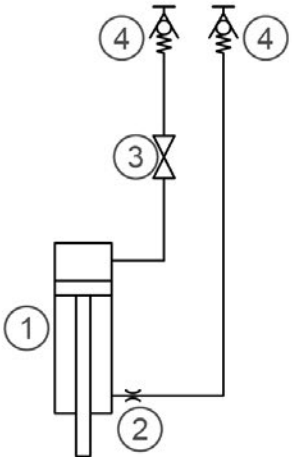

# Cylinders & Depth Stop Components

**RH ARRANGEMENT OF DEPTH STOPS**

(**Note**: The factory height setting of the threaded bushing-bolt plate bushing distance is set by using the stack of depth plates and a gap clearance of less than 1/32")

*PT25* *PT25HD*

**573455 - Depth Stop, Outer Pin (7) (9)**

**573456 - Depth Stop, Inner Pin (7) (9)**

**118417 - Lock Nut, 3/8 (2)**

**118511 - Flat Washer, 3/8 (2)**

**573599 - Bushing Plate, Threaded (1)**

*PT25*

**573598 - Spacer Bushing (2)**

*PT25HD*

**573709 - Spacer Bushing (2)**

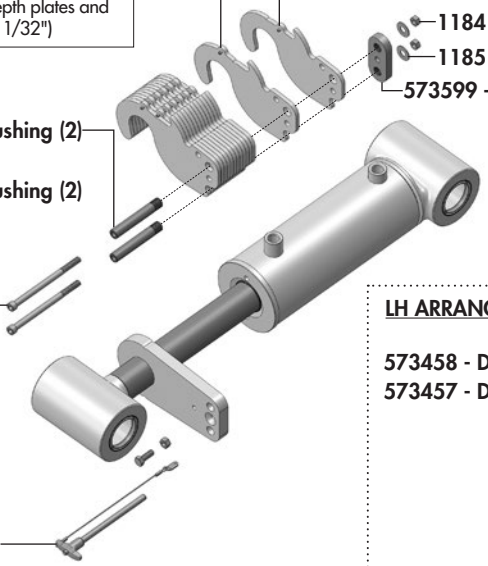

*PT25*

**117626 - Bolt, SHCS - 3/8 x 5-1/2 GR8 (2)**

*PT25HD*

**117653 - Bolt, SHCS - 3/8 x 6-1/4 GR8 (2)**

*PT25*

**117589 - Pin, Self-Lock - 3/8 x 5 (1)**

*PT25HD*

**117651 - Pin, Self-Lock - 3/8 x 6 (1)**

mounts with:

***118403 - Nut, 3/8 (1)***

***118005 - Bolt - 3/8 x 1 (1)***

**LH ARRANGEMENT OF DEPTH STOPS**

*PT25* *PT25HD*

**573458 - Depth Stop, Inner Pin (7) (9)**

**573457 - Depth Stop, Outer Pin (7) (9)**

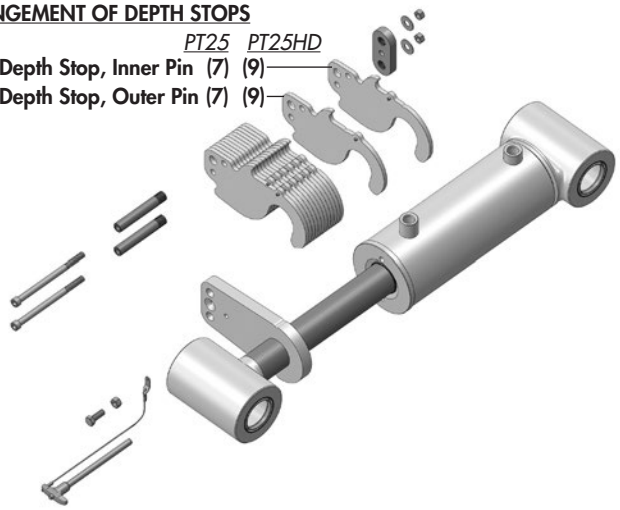

**123178 - Cylinder, Monarch - 4-1/4 x 8 x 2 (4)**

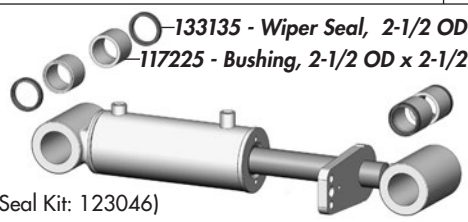

***133135 - Wiper Seal, 2-1/2 OD (4)***

***117225 - Bushing, 2-1/2 OD x 2-1/2 (4)***

(Seal Kit: 123046)

**Maintenance Free Pins & Bushings**

⚠ **IMPORTANT:** *INSTALL DRY*

*Do NOT use any oil/grease/lubricant on pin or bushing surfaces when installing the maintenance free pins into composite bushings.*

**123179 - Cylinder, Monarch - 3-3/4 x 8 x 2 (4)**

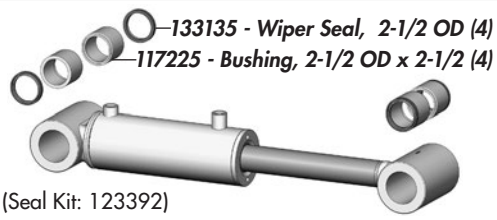

***133135 - Wiper Seal, 2-1/2 OD (4)***

***117225 - Bushing, 2-1/2 OD x 2-1/2 (4)***

(Seal Kit: 123392)

**123068 - Cylinder, Monarch - 5 x 40 x 2-1/2 (2)**

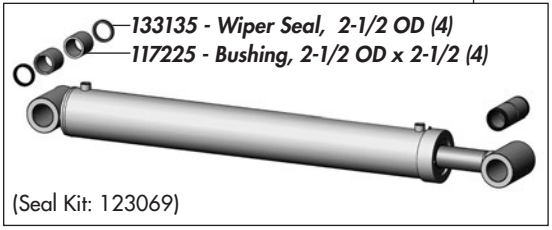

***133135 - Wiper Seal, 2-1/2 OD (4)***

***117225 - Bushing, 2-1/2 OD x 2-1/2 (4)***

(Seal Kit: 123069)

**123215 - Cylinder, Monarch - 4 x 12 x 2 (1)**

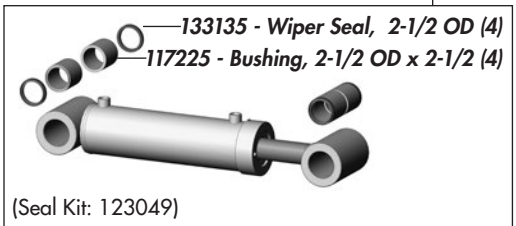

***133135 - Wiper Seal, 2-1/2 OD (4)***

***117225 - Bushing, 2-1/2 OD x 2-1/2 (4)***

(Seal Kit: 123049)

**123205 - Cylinder, Monarch - 4 x 28 x 2 (2)**

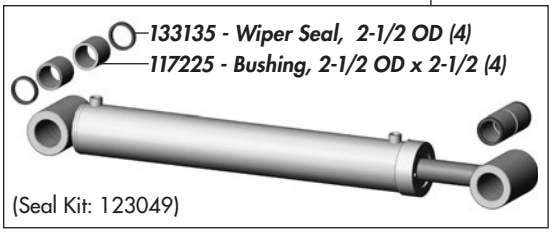

***133135 - Wiper Seal, 2-1/2 OD (4)***

***117225 - Bushing, 2-1/2 OD x 2-1/2 (4)***

(Seal Kit: 123049)

# Light Routing - Standard

## Wire Routing Overview

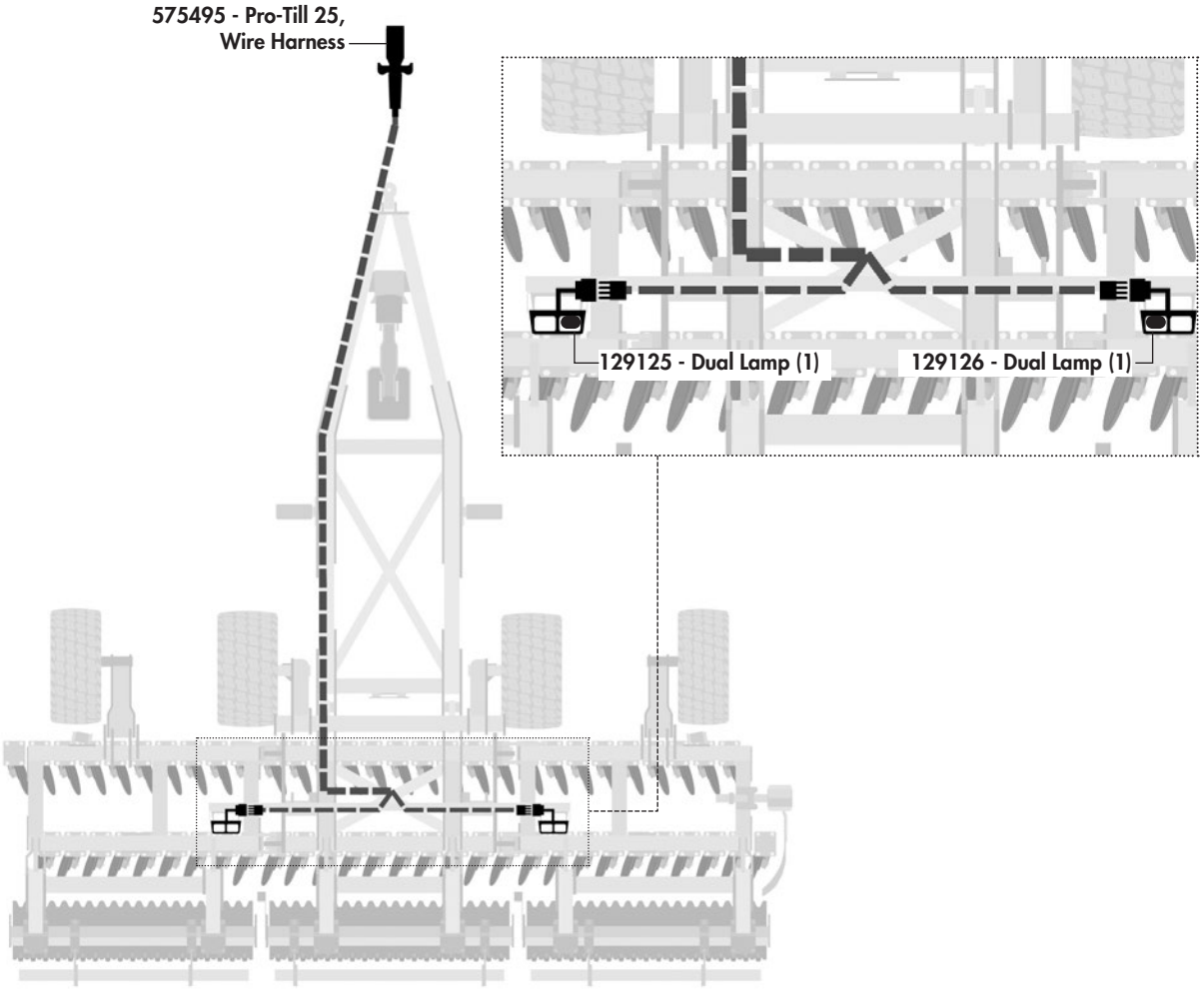

# 2 Year

## Limited Warranty - Agricultural Products

Degelman Industries LP ("Degelman") warrants to the original purchaser of any new Degelman equipment, purchased from an authorized Degelman dealer, that the equipment will be free from defects in material and workmanship for a period of two (2) years from the date of delivery, for non-commercial use (including farm, institutional, government, and municipality) and (1) year from the date of delivery for commercial use. The obligation of Degelman to the purchaser under this warranty is limited to the repair or replacement of defective parts in the first year and to the provision, but not the installation of replacement parts in the second year. Degelman reserves the right to inspect any equipment or parts which are claimed to have been defective in material or workmanship.

This warranty limits its replacement or repair coverage to what is consistent with the warranty of Degelman's suppliers of purchased components.

Replacement or repair parts installed in the equipment covered by this limited warranty are warranted for ninety (90) days from the date of delivery of such part or the expiration of the applicable new equipment warranty period, which ever occurs later. Warranted parts shall be provided at no cost to the user at an authorized Degelman dealer during regular working hours. Warranted replacement parts will either be replaced or rebuilt at Degelman's discretion.

### *Disclaimer of implied warranties & consequential damages*

This warranty shall not be interpreted to render Degelman Industries LP liable for injury, death, property damage or damages of any kind, whether direct, consequential, or contingent to property. Without limiting the generality of the foregoing, Degelman shall not be liable for damages resulting from any cause beyond its reasonable control, including, without limitation, loss of crops, any expense or loss of labour, supplies, rental machinery or loss of use.

No other warranty of any kind whatsoever, express or implied is made with respect to this sale; and all implied warranties of merchantability and fitness for a particular purpose which exceed the obligations set forth in this written warranty are hereby disclaimed and excluded from this sale. This exclusion shall not apply in any jurisdiction where it is not permitted by law.

### *This limited warranty shall not apply:*

1. If, in the sole opinion of Degelman, the unit has been subjected to misapplication, abuse, misuse, negligence accident or incorrect off-site machine set-up.
2. To any goods that have sustained damage or deterioration attributable to a lack of routine maintenance (eg. Check and Re-torque of fastening hardware, Hydraulic fluid purities, drive train alignments, and clutch operation)
3. If parts not made or supplied by Degelman have been used in the connection with the unit, if, in the sole judgement of Degelman such use affects its performance, safety, stability or reliability.
4. If the unit has been altered or repaired outside of an authorized Degelman dealership in a manner which, in the sole judgement of Degelman, affects its performance, safety, stability or reliability.
5. To expendable or wear items such as (eg. Harrow tines, Rock Picker and Rock Rake wear teeth and replaceable bushings and pins.) and any other items that in the company's sole judgement are a wear item.

No employee or representative of Degelman Industries LP is authorized to change this limited warranty in any way or grant any other warranty unless such change is made in writing and signed by the Degelman Service Manager.

This limited warranty is subject to any future availability of supply, which may directly affect Degelman's ability to obtain materials or manufacture replacement parts.

Degelman reserves the right to make improvements in design or changes in specifications at any time, without incurring obligations to owners of equipment previously delivered.

This limited warranty is subject to compliance by the customer to the enclosed *Retail Customer's Responsibility Under Degelman Warranty.*

# Warranty

***Retail Customer's Responsibility Under Degelman Warranty.***

It is the retail customer and/or Operator's responsibility to read the Operator's Manual, to operate, lubricate, maintain and store the equipment in accordance with all instructions and safety procedures. Failure of the operator to read the operators manual is a misuse of this equipment.

It is the retail customer and/or operators responsibility to inspect the product and to have any part(s) repaired or replaced when continued operation would cause damage or excessive wear to other parts or cause safety hazard.

It is the retail customer's responsibility to deliver the product to the authorized Degelman dealer, from whom he purchased it, for service or replacement of defective parts, which are covered by warranty. Repairs to be submitted for warranty consideration must be made within forty-five days of failure.

It is the Retail Customer's responsibility for any cost incurred by the dealer for hauling of the product for the purpose of performing a warranty obligation or inspection.

## WARRANTY INFORMATION

**Make certain the warranty registration card has been forwarded to:**

**Degelman Industries LP**
**Box 830 - 272 Industrial Dr.**
**Regina, SK, Canada**
**S4P 3B1**

Always give your dealer the serial number of your Degelman product when ordering parts or requesting service or other information.

The serial number is located on the machine as shown in the diagram below. In the space provided record the model number, the serial number and the date of purchase to assist your dealer in providing you with prompt and efficient service.

SERIAL NUMBER: _____

MODEL NUMBER: _____

DATE OF PURCHASE: _____







**Serial Number Plate Location**

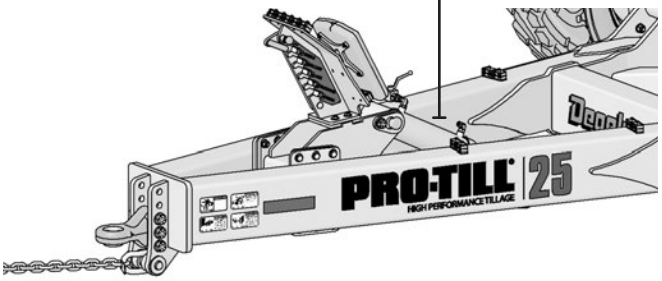



© 2026 Degelman Industries LP