Degelman

OPERATOR & PARTS MANUAL

TRUGRADE

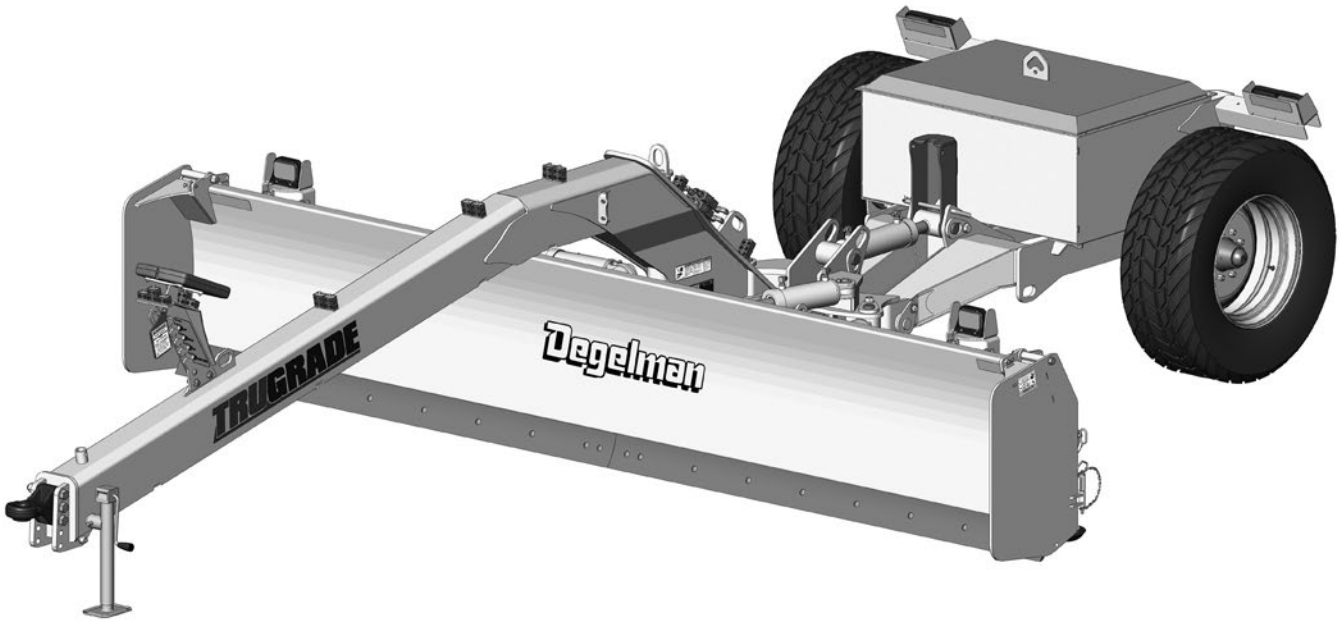

TRUGRADE | 12 | 14 | 16

143480 v1.1

DEGELMAN INDUSTRIES LP
BOX 830-272 INDUSTRIAL DRIVE,
REGINA, SK, CANADA, S4P 3B1
FAX 306.543.2140 PH 306.543.4447
1.800.667.3545 DEGELMAN.COM

TRUGRADE
12 | 14 | 16

QUICK-START GUIDE*
for TRUGRADE 12|14|16

* Refer to operators manual for complete safety and operation info.

REMEMBER! You must complete Product Registration to be eligible for Warranty.

Degelman

A Hydraulic Reference

❶ **Lift** ..... Lift Cylinder
❷ **Angle** ..... Angle Cylinder
❸ **Tilt** ..... Tilt Cylinder
❹ **Rear-Steer** ..... Rear-Steer Cylinder

B Set-up Information

1) Connect to Tractor Drawbar.

NOTE: *Use only a tractor with adequate power to pull the TruGrade under ordinary operating conditions.*

TruGrade is rated at **400 HP MAX.**
Ideal horsepower is range: **120 to 400 HP.**

2) Place Jack in storage position.

3) Connect Hydraulics.

4) TruGrade **14|16** models in ***Narrow Transport Position***, follow procedure below to take out of narrow transport.

⚠ **IMPORTANT:** *Do not use any hydraulic functions while in **Narrow Transport** or damage may occur.*

5) For all models in ***Standard Transport Position***:

• Fully extend the **Lift Cylinder** ❶

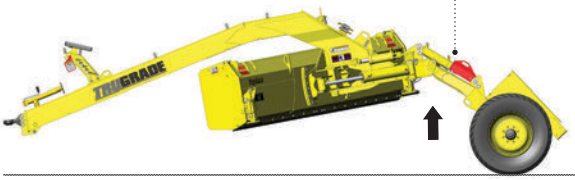

• Rotate up the red transport lock and secure in open position with the lock pin.

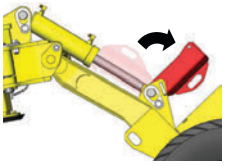

• Lower the machine into operating position.

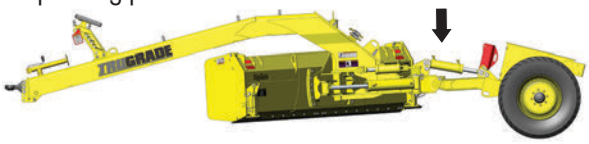

5) Ensure that the hitch clevis is set at the correct height for the tractor drawbar and trailer height.

NOTE: *The correct height is when the mouldboard is perpendicular to the ground when the cutting edge is on the ground.*

6) Experience will teach you the most efficient operating speed, but as a rule **3-4 MPH (5-7 km/h)** is a normal operating range.

C Narrow Transport Into Operating Position *(TruGrade **14|16** models only.)*

1) To transition from Narrow Transport position to the normal ***Operating Postition***, begin by driving the TruGrade onto level ground, straight behind the tractor.

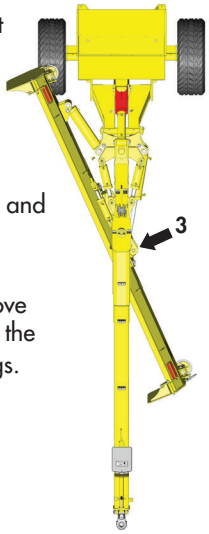

2) Connect all hydraulics to the tractor and place the **Angle Circuit** ❷ in float.

3) On the LH side angle cylinder, remove the rod-end cylinder pin and swing the cylinder rearward out of the pin lugs.

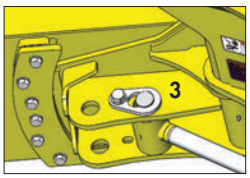

4) On the RH side angle cylinder, remove the rod-end cylinder pin and swing the cylinder rearward, out of the pin lugs.

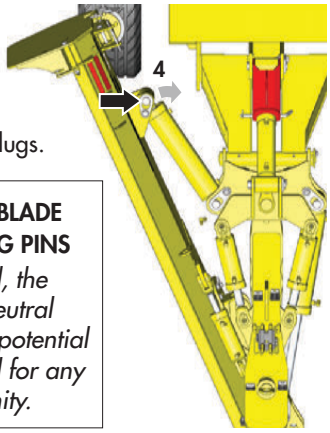

⚠ **CAUTION: CLEAR BLADE AREA BEFORE REMOVING PINS**
As the pins are removed, the blade may swing to a neutral position. Be aware of a potential crushing/impact hazard for any people in the direct vicinity.

5) Continued on next page...

5) Manually swing the blade to a neutral position and adjust the **Tilt Cylinder** 3 so the blade is level with the ground.



6) Fully extend the **Lift Cylinder** 1 and rotate up the red transport lock. Secure the lock in the open position using the lock pin.

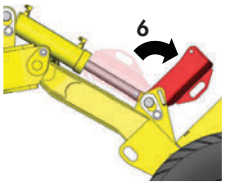

7) Lower the machine so the blade is slightly off the ground *(1" to 2")*.

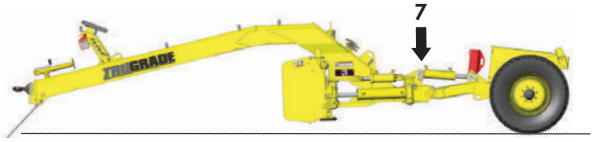

8) Use the **Angle Circuit** 2 to extend the RH cylinder and retract the LH cylinder. Align the RH and LH cylinder heads with the pin holes on the back of the tilt bell.

Note: *Each angle cylinder fitting may need to be cracked to allow for independent movement of the cylinder rods).*

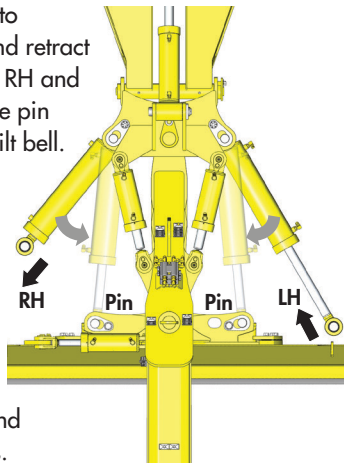

Install the cylinder pins and tighten the pin head bolts.

9) To remove any air trapped in the angle hydraulic circuit, angle the blade fully to the right and fully to the left 2-3 times.

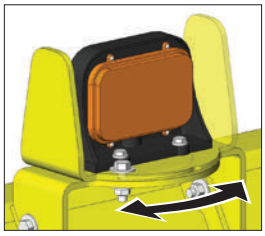

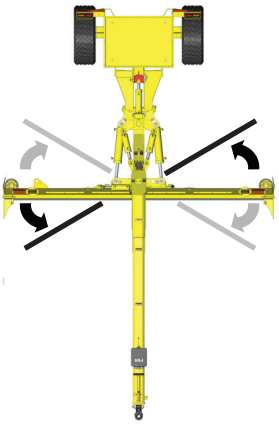

10) If applicable, adjust the blade marker lights to be visible from in front and behind the machine.

D Moving Into Transport Position

- **OPERATING to STANDARD TRANSPORT MODE**

1) Fully extend the **Lift Cylinder** 1

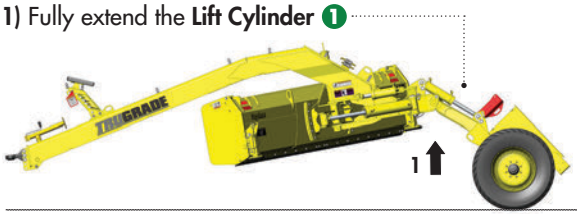

2) Rotate down the red transport lock and secure in place with the lock pin.

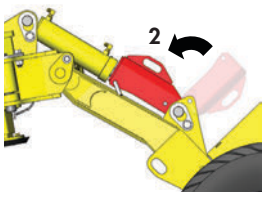

3) After securing the ***Transport Lock*** on the lift cylinder, it is advised to put weight on the transport lock by slightly retracting the cylinder.

- **OPERATING to NARROW TRANSPORT MODE**

(TruGrade **14** | **16** *models only.)*

NOTE: *To place TruGrade* **14** | **16** *models into* ***Narrow Transport*** *position, see instructions in the operators manual.*

⚠ **IMPORTANT:** *Do not use any hydraulic functions while in* ***Narrow Transport*** *or damage may occur.*

Maintenance

(Check Machine Daily)

- Check Hydraulic Connections & Hoses.
- Check Tire Pressure. **65 PSI (448 kPa)**
- Check Hubs & Spindles.
- Check Working Points & Pins.
- Grease Tilt Pad & Tilt Ring.
- Grease Rear Steer & Tilt Cylinder Pins.
- Grease Blade, Rear Steer, & Lift Pivot Pins.
- Grease Hitch Bolt & Wheel Hubs. **(50 hrs)**

*** Refer to operators manual for complete safety and operation info.**

© 2024 Degelman Industries LP

Degelman

TRUGRADE

**** Reference Sheet Quick-Start Guide***

OPERATORS SECTION - TABLE OF CONTENTS

Introduction	***1***
Safety	***2***
Operation	***4***
Transport	***8***
Narrow Transport Position *(TruGrade 14/16)*	***9***
Service & Maintenance	***11***
Troubleshooting	***18***

***PARTS SECTION* - TABLE OF CONTENTS**

General Overview	*19*
Blade Components	*20*
Hitch Frame Components	*21*
Rear Steer Components	*22*
Weight Cart Components	*23*
Optional Light Kit Components	*24*
Hydraulic Routing	*25*
Warranty	***30***

DEGELMAN INDUSTRIES LP
BOX 830-272 INDUSTRIAL DRIVE,
REGINA, SK, CANADA, S4P 3B1
FAX 306.543.2140 PH 306.543.4447
1.800.667.3545 DEGELMAN.COM

⚠ IMPORTANT:



READ MANUAL

Introduction

TRUGRADE

CONGRATULATIONS on your choice of a Degelman TruGrade to complement your farming operation. It has been designed and manufactured to meet the needs of a discerning agricultural market for effective excavating, levelling and filling of dirt, sand, gravel, snow and silage. Degelman TruGrade will make cleaning ditches, grading roads, digging ditches, leveling fields, and moving snow easier and more efficient than ever.

TO THE NEW OPERATOR OR OWNER - Safe, efficient and trouble free operation of your Degelman TruGrade requires that you and anyone else who will be operating or maintaining it, read and understand the Safety, Operation, Maintenance and Troubleshooting information contained within this manual.

By following the operating instructions in conjunction with a good maintenance program your machine will provide many years of trouble-free service. Keep this manual handy for frequent reference and to pass on to new operators or owners. Call your Degelman Dealer if you need assistance, information, or additional copies of the manual.

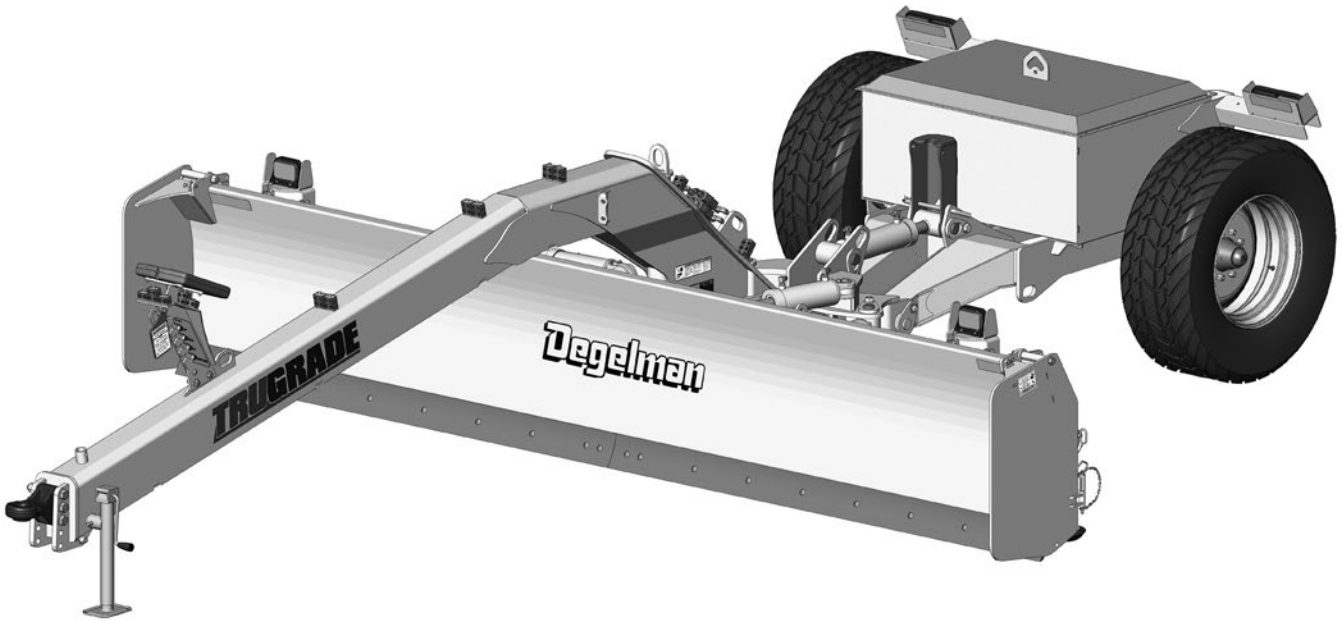

OPERATOR ORIENTATION - The directions left, right, front and rear, as mentioned throughout the manual, are as seen from the tractor drivers' seat and facing in the direction of travel.

Why is SAFETY important to YOU?

3 BIG Reasons:

- **Accidents Can Disable and Kill**
- **Accidents Are Costly**
- **Accidents Can Be Avoided**



SAFETY ALERT SYMBOL

The **Safety Alert Symbol** identifies important safety messages applied to the TruGrade and in this manual. When you see this symbol, be alert to the possibility of **injury or death**. Follow the instructions provided on the safety messages.

The **Safety Alert Symbol** means:

ATTENTION!
BECOME ALERT!
YOUR SAFETY IS INVOLVED!

SIGNAL WORDS

Note the use of the Signal Words: **DANGER**, **WARNING**, and **CAUTION** with the safety messages. The appropriate Signal Word has been selected using the following guidelines:

DANGER

DANGER: Indicates an imminently hazardous situation that, if not avoided, **WILL** result in death or serious injury if proper precautions are not taken.

WARNING

WARNING: Indicates a potentially hazardous situation that, if not avoided, **COULD** result in death or serious injury if proper precautions are not taken.

CAUTION

CAUTION: Indicates a potentially hazardous situation that, if not avoided, **MAY** result in minor or moderate injury if proper practices are not taken, or, serves as a reminder to follow appropriate safety practices.

SAFETY

YOU are responsible for the safe operation and maintenance of your Degelman TruGrade.

YOU must ensure that you and anyone else who is going to operate, maintain or work around the TruGrade be familiar with the operating and maintenance procedures and related **SAFETY** information contained in this manual.
This manual will take you step-by-step through your working day and alerts you to all good safety practices that should be adhered to while operating this equipment.

Remember, **YOU** are the key to safety. Good safety practices not only protect you but also the people around you. Make these practices a working part of your safety program. Be certain that **EVERYONE** operating this equipment is familiar with the recommended operating and maintenance procedures and follows all the safety precautions. Most accidents can be prevented. Do not risk injury or death by ignoring good safety practices.

- Equipment owners must give operating instructions to operators or employees before allowing them to operate the TruGrade, and at least annually thereafter per OSHA regulation 1928.51.
- The most important safety device on this equipment is a **SAFE** operator. It is the operator's responsibility to read and understand ALL Safety and Operating instructions in the manual and to follow these. All accidents can be avoided.
- A person who has not read and understood all operating and safety instructions is not qualified to operate the machine. An untrained operator exposes himself and bystanders to possible serious injury or death.
- Do not modify the equipment in any way. Unauthorized modification may impair the function and/or safety and could affect the life of the equipment.
- Think **SAFETY**! Work **SAFELY**!

GENERAL SAFETY

1. Read and understand the Operator's Manual and all safety signs before operating, maintaining or adjusting the TruGrade.



2. Install and properly secure all shields and guards before operating. Use hitch pin with a mechanical locking device.
3. Have a first-aid kit available for use should the need arise and know how to use it.



4. Have a fire extinguisher available for use should the need arise and know how to use it.



5. Wear appropriate protective gear. This list includes but is not limited to:
   - A hard hat
   - Protective shoes with slip resistant soles
   - Protective glasses or goggles
   - Heavy gloves
   - Wet weather gear
   - Hearing protection
   - Respirator or filter mask

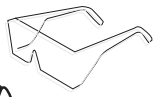



6. Clear the area of people, especially small children, and remove foreign objects from the machine before starting and operating.
7. Do not allow riders.
8. Stop tractor engine, set park brake, remove ignition key and wait for all moving parts to stop before servicing, adjusting, repairing or unplugging.
9. Review safety related items with all operators annually.

Operation

TO THE NEW OPERATOR OR OWNER

The Degelman TruGrade is a pull type tractor implement designed primarily for excavating, levelling and filling of dirt, snow, sand, gravel and silage.

It is the responsibility of the owner or operator to read this manual carefully to learn how to operate this product safely and how to set it to provide maximum efficiency. Safety is everyone's business. By following safe operating practices, a safe environment is provided for the operator and bystanders.

By following the operating instructions in conjunction with a good maintenance program your TruGrade will provide many years of trouble-free service.

PRINCIPLES OF OPERATION

The TruGrade consists of a blade/cutting edge unit attached to a hitch frame, steering knuckle, and weight cart pulled behind the tractor. By driving the tractor forward with the blade either straight ahead or angled, and allowing the cutting edge to run just under the ground surface, dirt, silage or snow is relocated as desired.

OPERATING SAFETY

1. Read and understand the Operator's Manual and all safety signs before using.
2. Stop tractor engine, set park brake, remove ignition key and wait for all moving parts to stop before servicing, adjusting, repairing or unplugging.
3. Keep hands, feet, hair and clothing away from all moving and/or rotating parts.
4. Do not allow riders on the TruGrade during operation or transporting.
5. Keep all shields and guards in place when operating (if applicable).
6. Clear the area of all bystanders, especially children, before starting.
7. Do not operate machine on overly steep side hills or slopes.
8. Be careful when working around or maintaining a high-pressure hydraulic system. Ensure all components are tight and in good repair before starting.
9. Clean all reflectors, lights and the SMV sign before transporting on a highway or public road. Be sure to check with local highway authorities and comply with their lighting requirements.

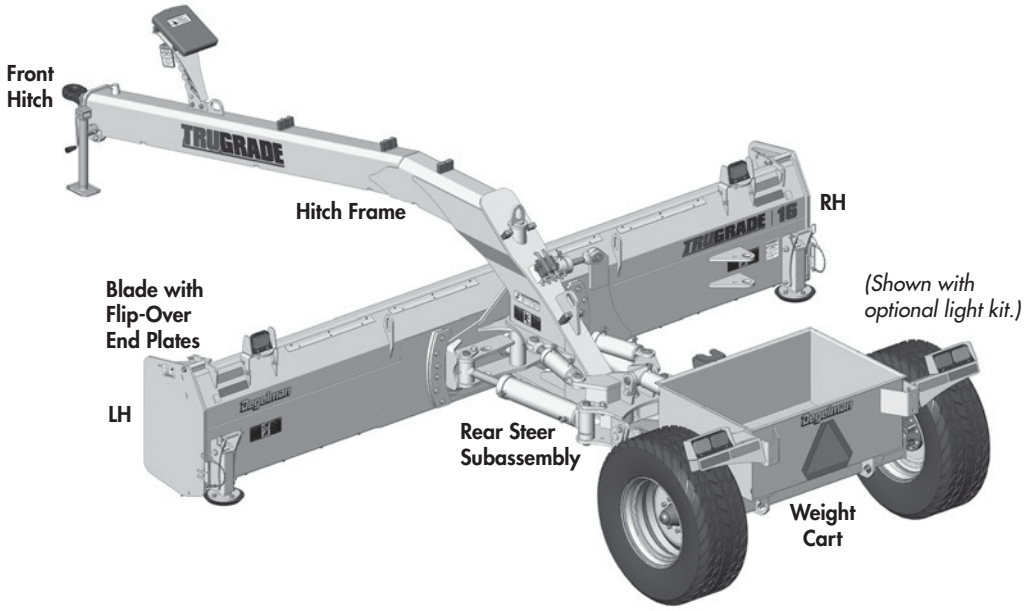

BREAK-IN

Although there are no operational restrictions on the TruGrade when it is new, there are some mechanical checks that must be done to ensure the long term integrity of the unit. When using this product for the first time, follow this procedure:

⚠ **IMPORTANT:** *It is important to follow the Break-In procedures especially those listed in the "Before using" section below to avoid damage:*

A. Before using:

1. Read Safety Info. & Operator's Manual.
2. Complete steps in "Pre-Operation Checklist".
3. Lubricate all grease points.
4. Check all bolt tightness.
   Refer to the torque specifications in the "Service & Maintenance" section.

B. After operating for 2 hours:

1. Check all hardware. Tighten as required.
2. Check all hydraulic system connections. Tighten if any are leaking.

C. After operating for 8 hours:

1. Repeat Step B.
2. Go to the service schedule as outlined in the "Service & Maintenance" section.

PRE-OPERATION CHECKLIST

It is important for both personal safety and maintaining good operational condition of the machine that the pre-operational checklist be followed.

Before operating the machine and each time thereafter, the following areas should be checked off:

- ☐ Lubricate the machine per the schedule outlined in the "Maintenance Section".
- ☐ Use only a tractor with adequate power to pull the TruGrade under ordinary operating conditions.

  NOTE: *TruGrade is rated at* **400 HP MAX**.
  Ideal horsepower is range: **120** to **400 HP**.
- ☐ Ensure that the hitch clevis is set at the correct height for the tractor drawbar and trailer height.

  NOTE: *The correct height is when the mouldboard is perpendicular to the ground when the cutting edge is on the ground.*
- ☐ Ensure that the machine is properly attached to the tractor using a drawbar pin with provisions for a mechanical retainer. Make sure that a retainer such as a Klik pin is installed.

  NOTE: *It is important to pin the draw bar in the central location only.*
- ☐ Check tires and ensure that they are inflated to the specified tire pressure. **65 PSI (448 kPa)**
- ☐ Ensure that a safety chain is installed on the hitch.
- ☐ Check oil level in the tractor hydraulic reservoir. Top up as required.
- ☐ Inspect all hydraulic lines, hoses, fittings and couplers for tightness. Tighten if there are leaks. Use a clean cloth to wipe any accumulated dirt from the couplers before connecting to the tractor's hydraulic system.
- ☐ Inspect all bolt connections and ensure bolts are properly tightened.
- ☐ Check for cutting edge and skid shoe wear. Replace before they are worn to far to prevent damage from occuring.

HOOK-UP / UNHOOKING

The TruGrade should always be parked on a level, dry area that is free of debris and foreign objects. Follow this procedure to hook-up:

1. Clear the area of bystanders & remove foreign objects from the machine and working area.
2. Make sure there is enough room to back the tractor up to the trailer hitch.
3. Start the tractor and slowly back it up to the hitch point.
4. Stop the tractor engine, place all controls in neutral, set park brake and remove ignition key before dismounting.
5. Use the jack to raise or lower the hitch to align with the drawbar.
6. Install a drawbar pin with provisions for a mechanical retainer such as a KLIK pin. Install the retainer.
7. Install a safety chain between the tractor and the hitch.
8. Connect the hydraulics. To connect, proceed as follows:

   • Use a clean cloth or paper towel to clean the couplers on the ends of the hoses. Also clean the area around the couplers on the tractor. Remove the plastic plugs from the couplers and insert the male ends.

   • Be sure to match the pressure and return line to one valve bank.
9. Connect lights (electrical socket plug) to tractor.
10. Raise the hitch jack and move it the the jack storage bushing on the top of the hitch.
11. When unhooking from the tractor, reverse the above procedure.

⚠ **IMPORTANT:** *NEVER disconnect the TruGrade from the tractor when stopped on sloped ground. The TruGrade should always be parked on a level, dry area that is free of debris and foreign objects.*

OPERATOR'S RESPONSIBILITY

Every operator should read this manual and be instructed in safe operating procedures.

An untrained operator is not qualified to operate this machine and could place themselves or bystanders in danger.

BLEEDING THE HYDRAULICS

Before beginning operation, bleed the hydraulic system to remove any air. To do this, cycle the hydraulics several times by holding the cylinder fully extended for several seconds. This will cause any trapped air to be purged from cylinder.

OPERATING SPEED

For normal operation, operate the tractor at a comfortable or manufacturer recommended speed. When operating over rough terrain or limited to space, reduce engine speed. The actual forward speed will be determined by tractor horsepower, land density and depth of cut.

Experience will teach you the most efficient operating speed, but as a rule 3-4 MPH (5-7 km/h) is a normal operating range.

BLADE DEPTH

Gauge the depth of cut to push the most material possible without losing speed through spinning the wheels or slowing the tractor engine. Do this by setting the depth shoes, and by regulating the depth for the blade height with the lifting cylinder operating lever.

The distance the material is pushed should be kept to a minimum. Dig and cut the material downgrade whenever possible.

DEPTH/SKID SHOES

Depth shoes are useful where soft soil condition, hard even surfaces, or uneven surfaces exist.

Soft uneven ground

- Skid shoe **low**
- Blade high

Hard even ground

- Skid shoe **high**
- Blade low

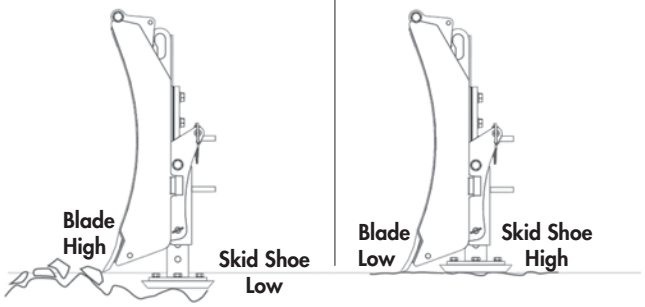

⚠ **DANGER:** *Keep hands and feet from under blade while making adjustments.*

To adjust the depth shoes up or down, raise the dozer blade and remove the ball detent pin. Move shoe to desired position and replace the ball detent pin.

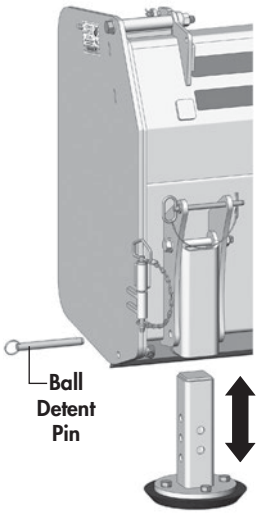

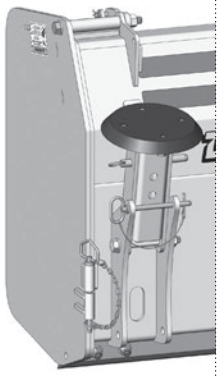

The depth shoe can be moved to the upright position when it is not needed for operation.

FLIP-OVER END PLATES

With the end plates flipped down, it allows the blade to carry additional material or be used as a pull scraper for leveling ground. With the end plates flipped up, the blade can be used to windrow material, backfill trenches or grade surfaces.

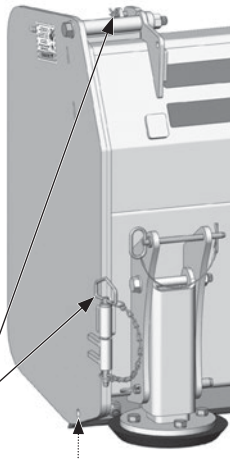

To secure the end plate in the down position, insert the pins at the indicated locations.

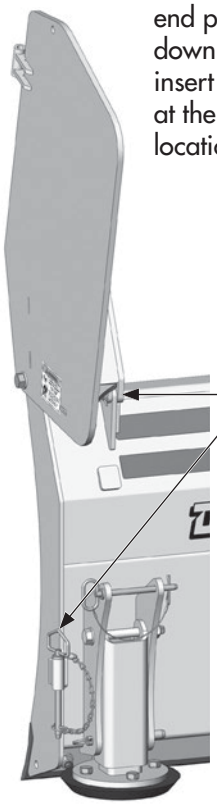

Note: An additional hole is provided at the bottom of the end plate so a bolt *(user supplied)* can be added for extreme use cases.

To secure the end plate in the up position, insert the pins in the indicated locations.

⚠ **DANGER:** *Falling end plates are a pinch point and crushing hazard. Use caution and properly secure in place.*

FILLING THE WEIGHT BOX

The TruGrade weight box can be filled to add additional traction to the rear wheels. It is recommended to fill the weight box with concrete, but other material such as sand or gravel can be used. The box will hold approximately 18 ft^3 of material.

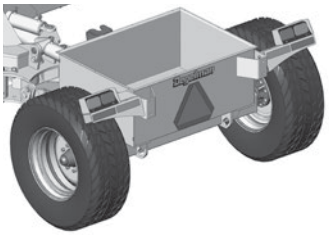

⚠ **CAUTION:** *If the box is filled with a loose material, ensure it does not spill out when the TruGrade is raised to the transport position.*

Transport

TRANSPORT SAFETY

- Read and understand ALL the information in the Operator's Manual regarding procedures and SAFETY when operating the machine in the field/ yard or on the road.
- Check with local authorities regarding machine transport on public roads. Obey all applicable laws and regulations.
- Always travel at a safe speed. Use caution when making corners or meeting traffic.
- Make sure the SMV (Slow Moving Vehicle) emblem and all the lights and reflectors that are required by the local highway and transport authorities are in place, are clean and can be seen clearly by all overtaking and oncoming traffic.
- Keep to the right and yield the right-of-way to allow faster traffic to pass. Drive on the shoulder, if permitted by law.
- Always use hazard warning flashers on tractor when transporting, unless prohibited by law.
- Always use a pin with provisions for a mechanical retainer and a safety chain when attaching to a tractor or towing vehicle.

⚠ **IMPORTANT:** ***Under No Circumstances*** *should there ever be riders while the TruGrade is in transport.*



OPTIONAL SAFETY LIGHT POSITIONING

If the TruGrade is equipped with the safety light kit, the blade clearance lights can be adjusted for better visibility during transport.

To adjust the lights, loosen mounting bolt, swivel the light and light shield to the desired angle, and re-tighten the mounting bolts.

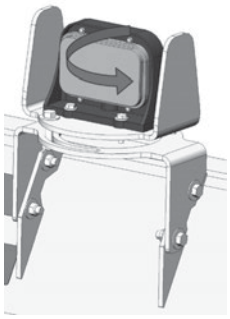

STANDARD TRANSPORT to OPERATING MODE

Note: *To take TruGrade 14 & 16 models out of* ***Narrow Transport*** *position, see instructions on the following page.*

To position the TruGrade for operating:

1) Fully extend the lift cylinder.

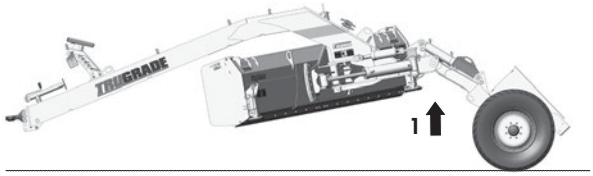

2) Rotate up the red transport lock and secure in open position with the lock pin.

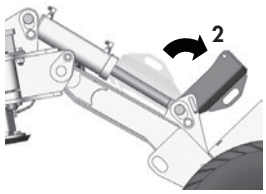

3) Lower the machine into operating position.

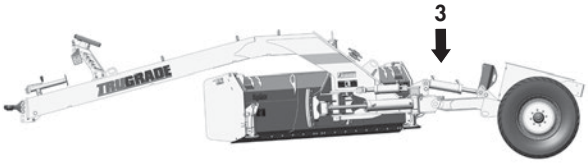

OPERATING MODE to STANDARD TRANSPORT

Note: *To place TruGrade 14 & 16 models into* ***Narrow Transport*** *position, see instructions on the following pages.*

To position the TruGrade for standard transport:

1) Fully extend the lift cylinder.

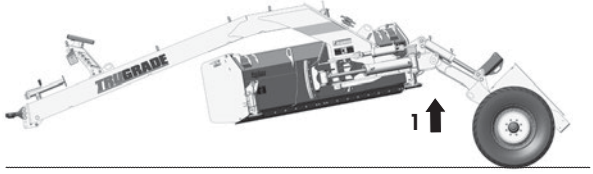

2) Rotate down the red transport lock and secure in place with the lock pin.

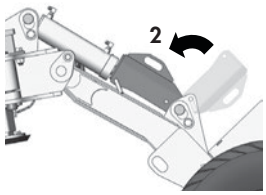

3) After securing the ***Transport Lock*** on the lift cylinder, it is advised to put weight on the transport lock by slightly retracting the cylinder.

NARROW TRANSPORT to OPERATING MODE

(TruGrade 14 & 16 models only.)

1) To transition from Narrow Transport position to the normal ***Operating Postition***, begin by driving the TruGrade onto level ground, straight behind the tractor.

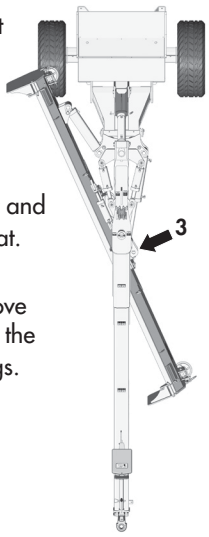

2) Connect all hydraulics to the tractor and place the **Angle Circuit** *(blue)* in float.

3) On the LH side angle cylinder, remove the rod-end cylinder pin and swing the cylinder rearward out of the pin lugs.

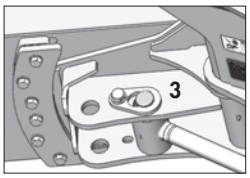

4) On the RH side angle cylinder, remove the rod-end cylinder pin and swing the cylinder rearward, out of the pin lugs.

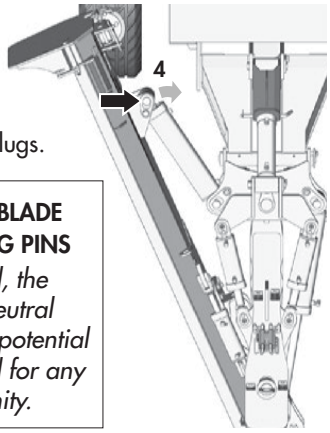

⚠ CAUTION: CLEAR BLADE AREA BEFORE REMOVING PINS

As the pins are removed, the blade may swing to a neutral position. Be aware of a potential crushing/impact hazard for any people in the direct vicinity.

5) Manually swing the blade to a neutral position and adjust the tilt cylinder so the blade is level with the ground.



6) Fully extend the **Lift Cylinder** and rotate up the red transport lock. Secure the lock in the open position using the lock pin.

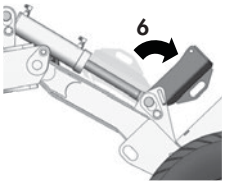

7) Lower the machine so the blade is slightly off the ground *(1" to 2")*.

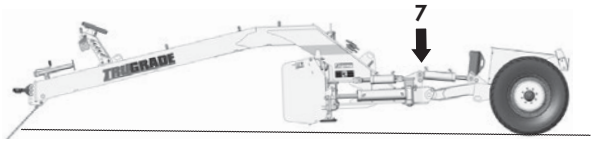

8) Use the **Angle Circuit** *(blue)* to extend the RH cylinder and retract the LH cylinder. Align the RH and LH cylinder heads with the pin holes on the back of the tilt bell.

Note: *Each angle cylinder fitting may need to be cracked to allow for independent movement of the cylinder rods).*

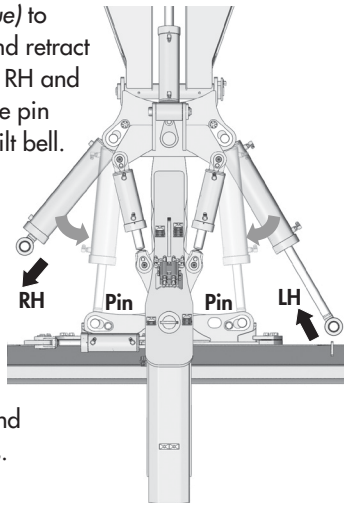

Install the cylinder pins and tighten the pin head bolts.

9) To remove any air trapped in the angle hydraulic circuit, angle the blade fully to the right and fully to the left 2-3 times.

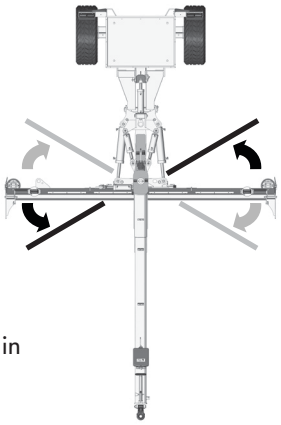

10) If applicable, adjust the blade marker lights to be visible from in front and behind the machine.

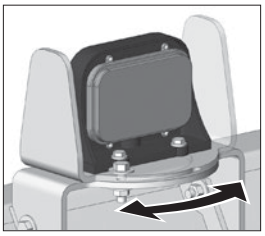

For transitioning the machine from ***Operating*** position into ***Narrow Transport*** position, refer to procedure on next page.

OPERATING MODE to NARROW TRANSPORT

(TruGrade 14 & 16 models only.)



1) To transition to ***Narrow Transport***, start by driving TruGrade onto level ground, straight behind the tractor.

2) Rear-Steer should be set to ***neutral position*** *(no offset in either direction).*

3) Blade Angle and Tilt should also be set to ***neutral position***. Blade should be level to the ground.



4) If the final transport width is required to be under 8'-6" *(on both the 16' blade and 14' blade)*, the ***RH side plate*** will need to be raised. Otherwise it can remain in the typical narrow position.

Typical Narrow

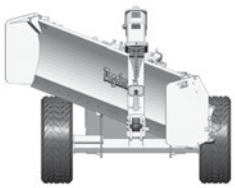

Under 8'-6"

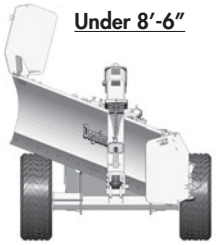

⚠ **DANGER:** *Falling end plates are a pinch point and crushing hazard. Use caution and properly secure in place.*

5) Lift the blade slightly off the ground (*1 to 2"*) and angle the RH of the blade all-the-way back. *(RH corner of the blade should be furthest back).*

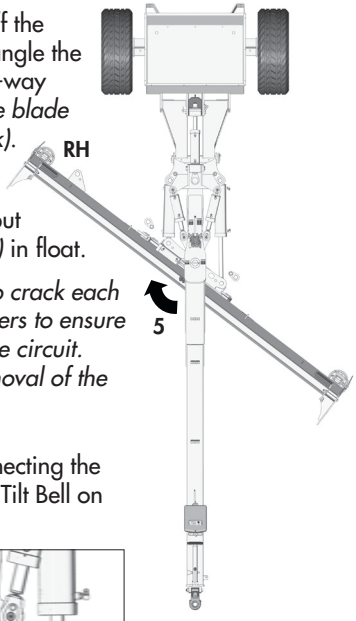

6) Once in this position, put the ***Angle Circuit*** *(blue)* in float.

Note: *You may need to crack each fitting on Angle Cylinders to ensure all pressure is out of the circuit. (This will make the removal of the angle pins easier).*

7) Remove both ***pins*** connecting the Angle Cylinders to the Tilt Bell on the back of the blade.

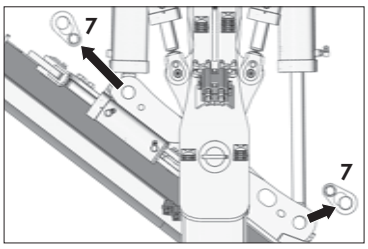

8) Once pins are removed, the ***Angle Cylinders*** can be swung out of the way.

Note: *The **extended** cylinder must be swung out first. This can be done by swinging the retracted cylinder towards the centerline of the machine and angling the blade further back to create clearance for extended cylinder to swing out and away from the blade.*

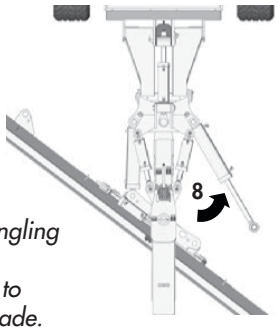

9) Next, the ***retracted*** cylinder can be swung out of the Tilt Bell and all the way back out of the way.

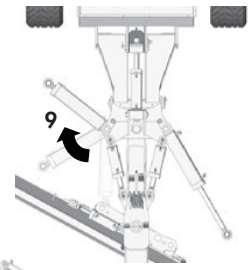

10) At this time, the machine will have to be lifted all the way up *(as high as it goes).*

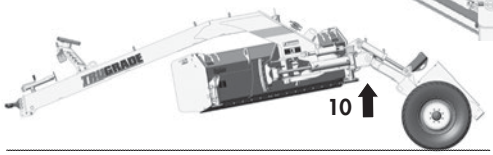

11) Once lifted, ensure you engage the transport lock onto the lift cylinder and secure properly in place.

Note: *It is advised to put weight on the Transport Lock after locking the cylinder by slightly retracting the cylinder.*

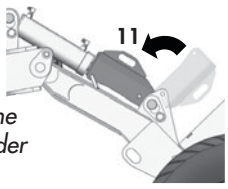

12) Manually angle the blade all the way back to the right until the retracted RH cylinder can be pinned into the RH transport lug on the back of the blade.

Note: *The tilt circuit can be used to help align the cylinder and the lug.*

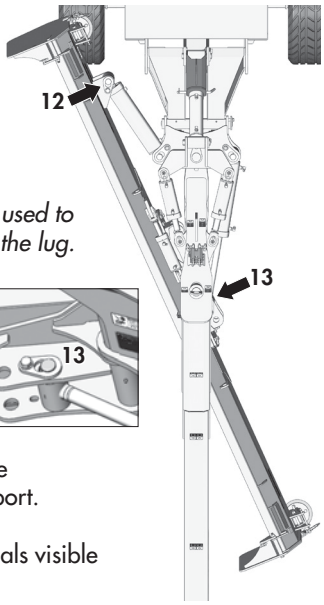

13) The extended LH angle cylinder can then be pinned into the slot on the LH side of the tilt bell.

14) All hydraulic circuits can be disconnected prior to transport.

15) Ensure DOT Lights and decals visible prior to transport.

For transitioning the machine from ***Narrow Transport*** position to ***Operating*** position, refer to procedure on the previous page.

MAINTENANCE SAFETY

1. Review the Operator's Manual and all safety items before working with, maintaining or operating the machine.
2. Lower machine to ground, stop the tractor engine, place all controls in neutral, set park brake and remove ignition key before servicing, adjusting or repairing.
3. Clear the area of bystanders, especially children when carrying out any maintenance and repairs or making adjustments.
4. Place safety stands or large blocks under the frame before removing tires or working beneath the machine.
5. Be careful when working around or maintaining a high-pressure hydraulic system. Wear proper eye and hand protection when searching for a high pressure hydraulic leak. Use a piece of wood or cardboard as a backstop when searching for a pin hole leak in a hose or a fitting.
6. Always relieve pressure before disconnecting or working on hydraulic system.

CUTTING EDGE WEAR

This **Cutting Edge** for the TruGrade is reversible with 1-3/8" of wearable edge per side.

Occasionally inspect this edge to ensure it has not been worn down past this amount or there will be damage to the bottom of the TruGrade Assembly.

If reversing or replacing the cutting edge becomes necessary, it is recommended to inspect and purchase new lock nuts and other required mounting hardware for re-assembly.

GREASING

Grease: Use an SAE multi-purpose grease with extreme pressure (EP) performance. Also acceptable is an SAE multi-purpose lithium base grease.

1. Use only a hand-held grease gun for all greasing.
2. Wipe grease fitting with a clean cloth before greasing, to avoid injecting dirt.
3. Replace and repair broken fittings immediately.
4. If fittings will not take grease, remove and clean thoroughly. Also clean lubricant passageway. Replace fitting if necessary.
5. Inject grease until you see grease being expelled from the pin or bushing areas.

⚠ LUBE AFTER EVERY 8 HRS.

EVERY 8 HRS.

Grease/lubricate the following:

- *Rear Steer Cylinder Pins*
- *Tilt Cylinder Pins*
- *Tilt Pad & Tilt Ring*
- *Blade Pivot Pin*
- *Rear Steer Pivot Pin*
- *Lift Pivot Pin*

Check Tire Pressure:

- ***65 PSI*** *(448 kPa)*

EVERY 50 HRS.

- *Grease Wheel Hubs*
- *Grease Hitch Ball*

ANNUAL

- *Check Bolt Tightness*
- *Check Wheel Bearings*

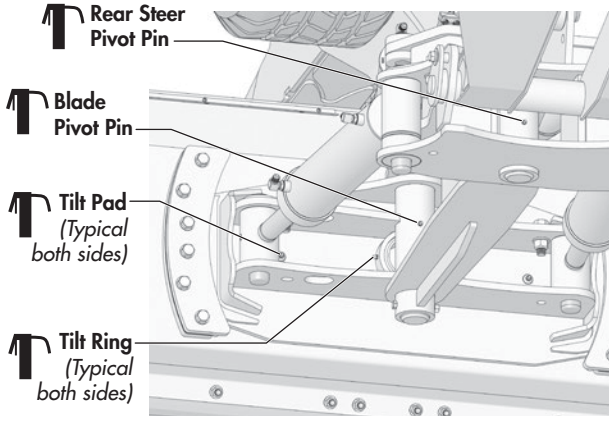

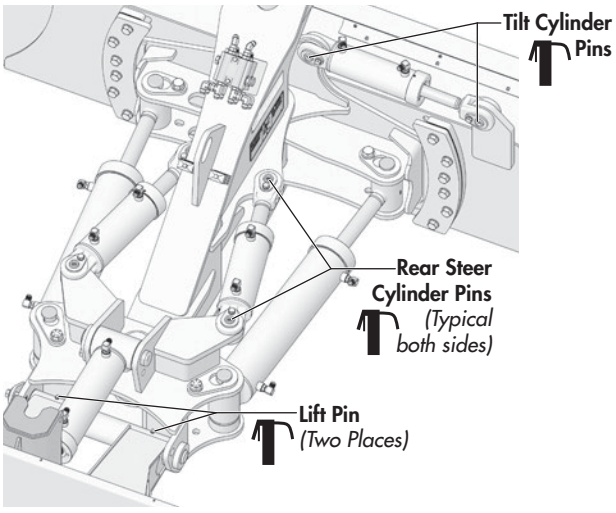

HARDWARE SPECIFICATIONS

Note: Unless stated otherwise, hardware is typically:
Hex, Plated GR5 UNC or P8.8 (metric)

TORQUE SPECIFICATIONS

TORQUE

Checking Bolt Torque

The tables below give correct torque values for various bolts and capscrews. Tighten all bolts to the torques specified in chart unless otherwise noted. Check the tightness of bolts periodically, using these bolt torque charts as a guide. Replace hardware with the same strength (Grade/Class) bolt.

IMPERIAL TORQUE SPECIFICATIONS

(Coarse Thread - based on "Zinc Plated" values)



Size	Grade 5	Grade 8
	lb.ft (*N.m*)	lb.ft (*N.m*)
1/4"	**7 (*10*)**	**10 (*14*)**
5/16"	15 (*20*)	20 (*28*)
3/8"	**25 (*35*)**	**35 (*50*)**
7/16"	40 (*55*)	60 (*80*)
1/2"	**65 (*90*)**	**90 (*120*)**
9/16"	90 (*125*)	130 (*175*)
5/8"	**130 (*175*)**	**180 (*245*)**
3/4"	230 (*310*)	320 (*435*)
7/8"	**365 (*495*)**	**515 (*700*)**
1"	550 (*745*)	770 (*1050*)
1-1/8"	**675 (*915*)**	**1095 (*1485*)**
1-1/4"	950 (*1290*)	1545 (*2095*)
1-3/8"	**1250 (*1695*)**	**2025 (*2745*)**
1-1/2"	1650 (*2245*)	2690 (*3645*)

METRIC TORQUE SPECIFICATIONS

(Coarse Thread - based on "Zinc Plated" values)



Size	Class 8.8	Class 10.9
	lb.ft (*N.m*)	lb.ft (*N.m*)
M6	**7 (*10*)**	**10 (*14*)**
M8	16 (*22*)	23 (*31*)
M10	**30 (*42*)**	**45 (*60*)**
M12	55 (*75*)	80 (*108*)
M14	**90 (*120*)**	**125 (*170*)**
M16	135 (*185*)	195 (*265*)
M18	**190 (*255*)**	**270 (*365*)**
M20	265 (*360*)	380 (*515*)
M22	**365 (*495*)**	**520 (*705*)**
M24	460 (*625*)	660 (*895*)
M27	**675 (*915*)**	**970 (*1315*)**
M30	915 (*1240*)	1310 (*1780*)
M33	**1250 (*1695*)**	**1785 (*2420*)**
M36	1600 (*2175*)	2290 (*3110*)

HYDRAULIC SAFETY

- Make sure that all components in the hydraulic system are kept in good condition and are clean.
- Replace any worn, cut, abraded, flattened or crimped hoses and metal lines.
- Do not attempt any makeshift repairs to the hydraulic lines, fittings or hoses by using tape, clamps or cements. The hydraulic system operates under extremely high-pressure. Such repairs will fail suddenly and create a hazardous and unsafe condition.
- Wear proper hand and eye protection when searching for a high-pressure hydraulic leak. Use a piece of wood or cardboard as a backstop instead of hands to isolate and identify a leak.

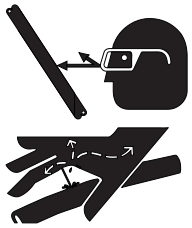

- If injured by a concentrated high-pressure stream of hydraulic fluid, seek medical attention immediately. Serious infection or toxic reaction can develop from hydraulic fluid piercing the skin surface.
- Before applying pressure to the system, make sure all components are tight and that lines, hoses and couplings are not damaged.

HYDRAULIC HOSE SPECIFICATIONS

Note: Unless otherwise stated, Hydraulic Hoses are either 3/8 or 1/2 with 3/4 JIC female swivel ends.

HYDRAULIC HOSE INSTALLATION TIPS

The following tips are to help you identify some possible problem areas in the installation of hydraulic hoses.

1. Installation should be completed in a clean environment clear of dust and contaminants. Hoses and fittings should be capped if not installed.
2. Ensure hoses are not twisted during installation as this may weaken the hose. Also, the pressure in a twisted hose may loosen fittings or connections.
3. Allow sufficient bend radius in hoses when installing to prevent lines from collapsing and flow becoming restricted.
4. When installing hoses in an area of movement or flexing, allow enough free length for motion and to ensure fitting connections are not stressed.
5. Ensure hoses are properly clamped and secured in position after routing is complete to provide a cleaner installation and prevent possible damage or hazards.

HYDRAULIC FITTING INSTALLATION

The following info is to help you identify and properly install some of our standard hydraulic fittings.

SAE (JIC) 37° Flare

JIC fittings - Metal-to-metal sealing type fittings featuring a 37° flare (angle of sealing surface) and straight UNF (Unified National Fine) Threads.

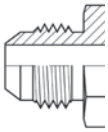

(Lubricated Values) Dash	Thread Size	Torque - lb.ft (*N.m*)	
-4	7/16 - 20	9-12	(12-16)
-6	9/16 - 18	14-20	(*19-27*)
-8	3/4 - 16	27-39	(*37-53*)
-10	7/8 - 14	36-63	(*50-85*)
-12	1-1/16 - 12	65-88	(*90-119*)

Tightening JIC 37° Flare Type Fittings

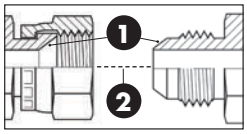

1. Check flare and flare seat for defects that might cause leakage.
2. Align fittings before tightening. Lubricate connections & hand tighten swivel nut until snug.
3. Using two wrenches, torque to values shown in table.

Alternate Installation Method

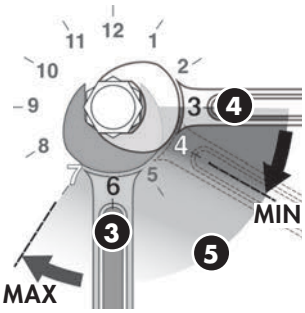

3. Using two wrenches. Place one wrench on the fixed connector body at a clock position of **6** o'clock.
4. Place the second wrench on the second connection as close to the **3** o'clock position as possible.
5. Tighten by rotating the second connection firmly to at least the **4** o'clock position, but no more than the **7** o'clock position. Typically, the larger the fitting size the less rotation required.

ORFS (O-Ring Face Seal)

ORFS fittings use an O-ring compression method to seal. This method offers a high level of sealing along with good vibration resistance. Male fittings include an O-ring located in a groove on the flat face. Female fittings feature a flat face and UNF straight threaded swivel nut.

The **Torque** method is recommended for ORFS installation.

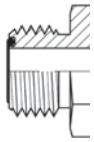

Dash	Thread Size	Torque - lb.ft (*N.m*)	
-4	9/16 - 18	18	(*25*)
-6	11/16 - 16	30	(*40*)
-8	13/16 - 16	40	(*55*)
-10	1 - 14	60	(*80*)
-12	1-3/16 - 12	85	(*115*)

Tightening ORFS (O-Ring Face Seal) Fittings

1. Inspect components and ensure the O-Ring seal is undamaged and properly installed in the groove of the face seal. Replacing the O-Ring may be necessary.
2. Align, thread into place and hand tighten.
3. Tighten to proper torque from the table shown above.

Note: A **DASH** size refers to a diameter of a hose (*inside*) or of a tube (*outside*) measured in 1/16″ increments.
For example, a ***Hose*** specified as *dash* **8** or **-8** would have an **inside** diameter of **8***/16″* or **1/2″**.
Alternatively, a ***Tube*** specified as *dash* **8** or **-8** would have an ***outside*** diameter of **8***/16″* or **1/2″**.

ORB (O-Ring Boss)

Male ORB fittings have straight UNF threads, a sealing face and an O-ring. The female fittings are generally found in the ports of machines and feature straight threads, a machined surface, and a chamfer to accept the O-ring. Sealing is achieved through the compression of the male O-ring against the chamfered sealing face of the female fitting.

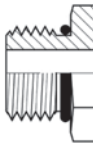

(Lubricated Values) Dash	Thread Size	Torque Non-Adjustable lb.ft (*N.m*)	Torque Adjustable lb.ft (*N.m*)
-4	7/16 - 20	30 (*40*)	15 (*20*)
-6	9/16 - 18	35 (*46*)	35 (*46*)
-8	3/4 - 16	60 (*80*)	60 (*80*)
-10	7/8 - 14	100 (*135*)	100 (*135*)
-12	1-1/16 - 12	135 (*185*)	135 (*185*)

Tightening ORB (O-Ring Boss) Fittings

Non-adjustable Port End Assembly

1. Inspect the components to ensure that male and female threads and sealing surfaces are free of nicks, burrs, scratches, or any foreign material.
2. Ensure O-Ring seal is properly installed and undamaged.
3. Lubricate threads and O-ring to help the O-ring slide past the port entrance corner and avoid damaging it.
4. Screw the fitting into position tighten to proper torque value from the table shown above.

Adjustable Port End Assembly

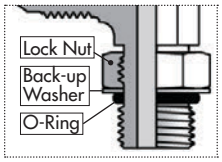

1. Inspect the components to ensure male & female threads and sealing surfaces are free of nicks, burrs, scratches, or any foreign material.
2. Ensure O-Ring seal is properly installed and undamaged.
3. Lubricate threads and O-ring to help the O-ring slide smoothly into the port and avoid damage.
4. Loosen back the lock nut as far as possible. Make sure back-up washer is not loose and is pushed up as far as possible.
5. Screw the fitting into port until the back-up washer or the retaining ring contacts face of the port. Light wrenching may be necessary. Over tightening may damage washer.
6. To align the end of the fitting to accept incoming tube or hose assembly, unscrew the fitting by the required amount, but not more than one full turn.
7. Using two wrenches, hold the fitting in desired position and tighten the locknut to the proper torque value from the table located above.
8. Inspect to ensure that O-ring is not pinched and that washer is seated flat on the face of the port.

HYDRAULIC CYLINDER REPAIR

PREPARATION

When cylinder repair is required, clean off unit, disconnect hoses and plug ports before removing cylinder.

When removed, open the cylinder ports and drain the cylinder's hydraulic fluid.

Examine the type of cylinder. Make sure you have the correct tools for the job.

You may require the following tools:

- *Proper **Seal Kit***
- *Allen Key Set*
- *Emery cloth*
- *Torque Wrench*

Threaded Head Cylinder
(Monarch)

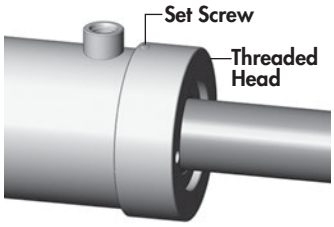

CYLINDER ROD LOCKNUT TORQUE VALUES

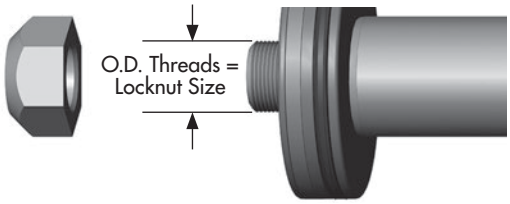

LOCKNUT SIZE (PISTON)	TORQUE VALUE
3/8 - 24 UNF	25-30 lb.ft (35-42 *N.m*)
1/2 - 20 UNF	**40-60 lb.ft *(55-80 N.m)***
5/8 - 18 UNF	95-105 lb.ft (130-140 *N.m*)
3/4 - 16 UNF	**175-225 lb.ft *(240-305 N.m)***
7/8 - 14 UNF	200-275 lb.ft (270-370 *N.m*)
1 - 14 UNF	**300-380 lb.ft *(405-515 N.m)***
1 1/8 - 12 UNF	400-500 lb.ft (540-675 *N.m*)
1 1/4 - 12 UNF	**500-600 lb.ft *(675-810 N.m)***
1 1/2 - 12 UNF	700-800 lb.ft (950-1085 *N.m*)
1 3/4 - 12 UNF	**800-900 lb.ft *(1085-1220 N.m)***

REPAIRING A THREADED HEAD CYLINDER

Set Screw Style

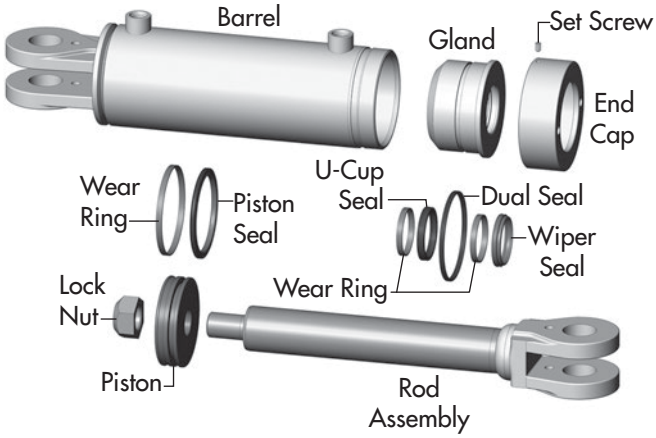

DISASSEMBLY

1. Loosen Set Screw and turn off end cap.
2. Carefully remove piston/rod/gland assemblies.
3. Disassemble the piston from the rod assembly by removing lock nut.

NOTE: *DO NOT* clamp rod by chrome surface.

4. Slide off gland assembly & end cap.
5. Remove seals and inspect all parts for damage.
6. Install new seals and replace damaged parts with new components.
7. Inspect the inside of the cylinder barrel, piston, rod and other polished parts for burrs and scratches. Smooth areas as needed with an emery cloth.

REASSEMBLY

1. Reinstall rod through end cap & gland assembly.
2. Secure piston to rod with lock nut. Torque lock nut to proper value (refer to chart for proper torque value).
3. Lube inside of barrel, piston seals, and gland seals with hydraulic oil.
4. With cylinder body held gently in a vise, insert piston, gland, end cap and rod combination using a slight rocking motion.
5. Apply Loctite anti-seize before installing cylinder end cap.
6. Torque cylinder end cap to 440 lb.ft (600 N.m).
7. Tighten Set Screw on end cap to 6 lb.ft (8 N.m).

WHEEL HUB REPAIR

IMPORTANT: *Be sure to block up unit securely before removing tires.*

DISASSEMBLY

1. Remove dust cap.
2. Remove cotter pin from nut.
3. Remove nut and washer.
4. Pull hub off spindle.
5. Dislodge the inner cone bearing and dust seal.
6. Inspect cups that are press fitted into hub for pits or corrosion and remove if necessary.
7. Inspect and replace defective parts with new ones.

ASSEMBLY

1. If cups need replacing, be careful to install them gently and evenly into hub until they are fully seated.
2. Apply a thick wall of grease inside hub. Pack grease in cones.
3. Install inner cone and dust seal as illustrated.
4. Position hub onto spindle and fill surrounding cavity with grease.
5. Assemble outer cone, washer and nut.
6. Tighten nut while rotating hub until there is a slight drag.
7. Turn nut back approximately 1/2 turn to align cotter pin hole with notches on nut.
8. Install cotter pin and bend legs sideways over nut.
9. Fill dust cap half full of grease and gently tap into position.
10. Pump grease into hub through grease fitting until lubricant can be seen from dust seal.

COMMON HUB & SPINDLE COMPONENTS

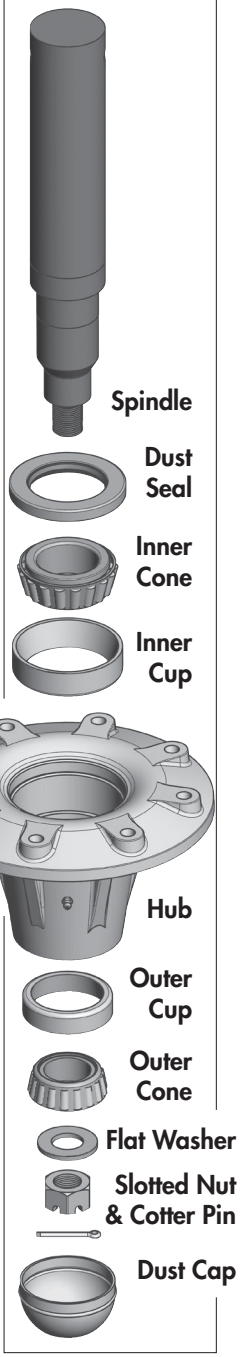

WHEEL NUT & WHEEL BOLT TORQUE

TORQUE

BOLT PATTERNS

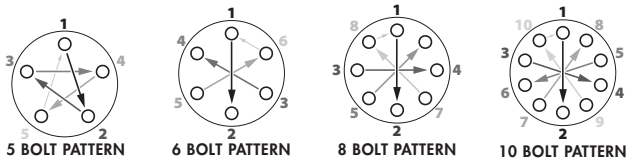

Wheel Nut/Bolt Torque

Size	lb.ft (N.m)
9/16	120-130 (165-175)
5/8	**185-190 (250-260)**
3/4	280-300 (380-405)

Wheel Tightening Procedure

1. Install and **hand tighten** nuts/bolts.
2. Tighten to approx. **20% Torque** value using the Bolt **Star or CrissCross** patterns shown above.
3. Tighten to **Full Torque** value using the **Star or CrissCross** pattern.
4. If applicable, install **Rear Locknuts** using **Wheel Torque Values**.

TIRE SAFETY

1. Failure to follow proper procedures when mounting a tire on a wheel or rim can produce a blow out which may result in serious injury or death.
2. Do not attempt to mount a tire unless you have the proper equipment and experience to do the job.
3. Have a qualified tire dealer or repair serviceman perform required tire maintenance.

REPLACING A PRESSED BUSHING

NOTE: *You may need the following tools: Press, hammer, punch, pry-bar, "Step-Tool"*

Use the following as a guideline for repair:

1. Ensure the area and frame are properly secured, supported, and safe to work on. Safely remove the pin(s), cylinder, and/or components necessary in order to access and work on the damaged bushing.
2. Remove the existing bushing using required tools. In some instances, you may need to cut the damaged bushing in order for easier removal (use proper safety precautions and try not to damage other components if using this method).
3. With the bushing removed, clean and prepare the location for the new bushing insert.

   Note: It is recommended to use a mixture of "*Dish Soap and Water*" as a lubricant on the outside of the composite bushing. **IMPORTANT:** DO NOT use *oil or grease* on outside or inside of composite bushings.

4. Use a stepped tool to ensure the edge of the bushing is not damaged when inserting.

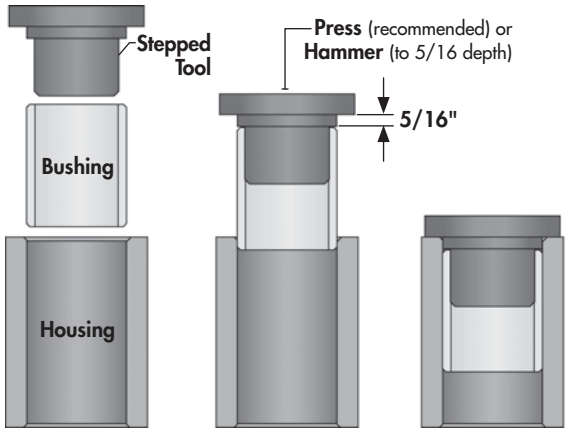

5. Ensuring the bushing is properly aligned, press into hole (preferred method) or hammer into position by striking the stepped tool.
6. Continue to install until the bushing edge is recessed in to a distance of 5/16" to allow for the outer seal to be properly installed. Do not exceed this depth.
7. Repeat procedure for bushing on opposite side.
8. When both bushings are installed to the proper depth, install new seals.
9. Re-assemble all other necessary components.

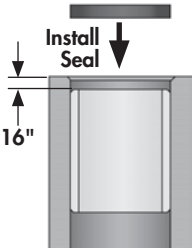

STORAGE

After the season's use, completely inspect all major systems of the machine. Repair or replace any worn or damaged components to prevent unnecessary down time at the beginning of next season.

Since the unit can be used in extremely adverse conditions during the season, the machine should be carefully prepared for storage to ensure that all dirt, mud, debris and moisture has been removed.

Follow this procedure when preparing to store:

1. Wash the entire machine thoroughly using a water hose or pressure washer to remove all dirt, mud, debris or residue.
2. Inspect all parts to see if anything has become entangled in them. Remove the entangled material.
3. Lubricate all grease fittings to remove any moisture.
4. Inspect all hydraulic hoses, fittings, lines and couplers. Tighten any loose fittings. Replace any hose that is badly cut, nicked or abraded or is separating from the crimped end of the fitting.
5. Touch up all paint nicks and scratches to prevent rusting.
6. Oil the exposed rams on the hydraulic cylinders to prevent rusting.
7. Select an area that is dry, level and free of debris.

DECAL LOCATION OVERVIEW

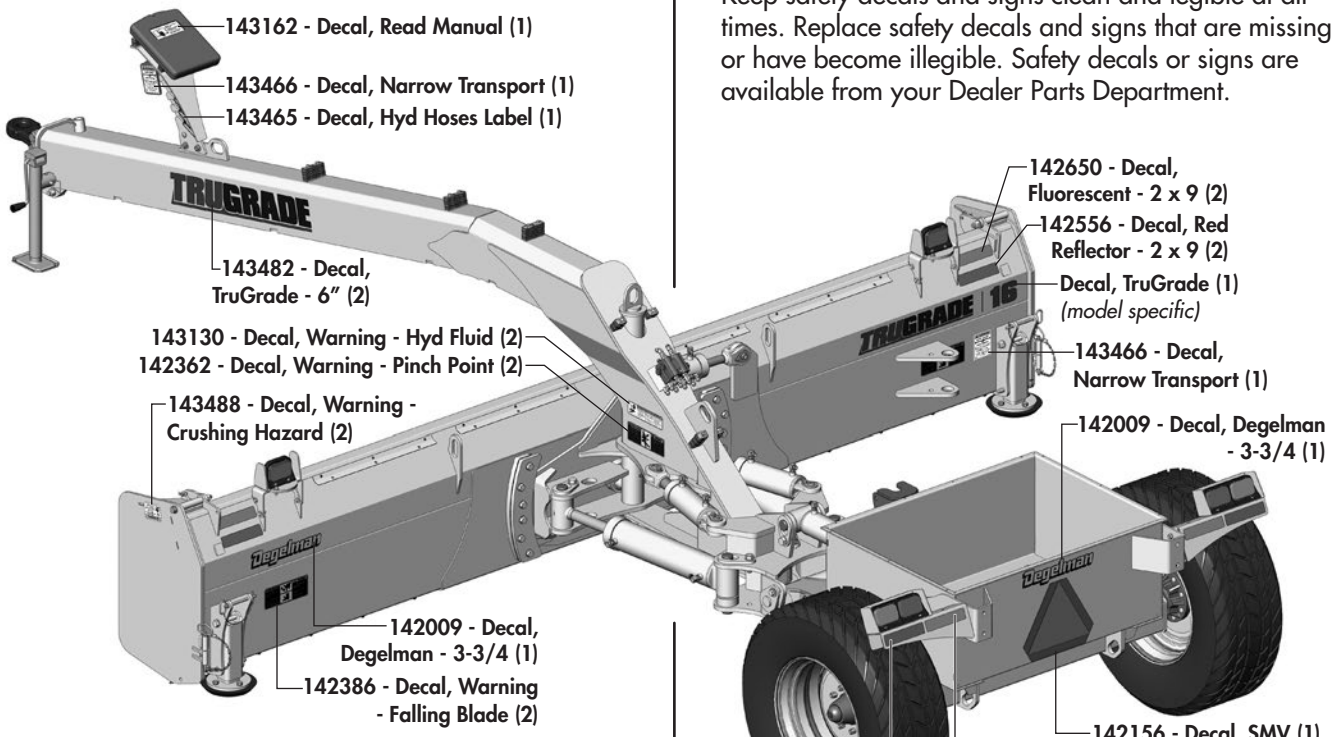

142556 - Decal, Reflector Red - 2 x 9	(4)
142557 - Decal, Reflector Amber - 2 x 9	(4)
142650 - Decal, Fluorescent - 2 x 9	(4)
142156 - Decal, SMV Sign	(1)
142362 - Decal, Warning - Pinch Point	(2)
142386 - Decal, Warning - Falling Blade	(2)
143130 - Decal, Warning - Hyd Fluid	(2)
143466 - Decal, Warning - Narrow Transport	(2)
143488 - Decal, Warning - Crushing Hazard	(2)
143162 - Decal, Read Manual	(1)
143465 - Decal, Hydraulic Hose Label	(1)
143198 - Decal, Degelman - 8-1/4"	(1)
142009 - Decal, Degelman - 3-3/4"	(2)
143482 - Decal, TruGrade - 6"	(2)
Decal, TruGrade *(model specific)*	
143483 - Decal, TruGrade 12	(1)
143484 - Decal, TruGrade 14	(1)
143485 - Decal, TruGrade 16	(1)

SAFETY DECALS & REFLECTORS

Keep safety decals and signs clean and legible at all times. Replace safety decals and signs that are missing or have become illegible. Safety decals or signs are available from your Dealer Parts Department.

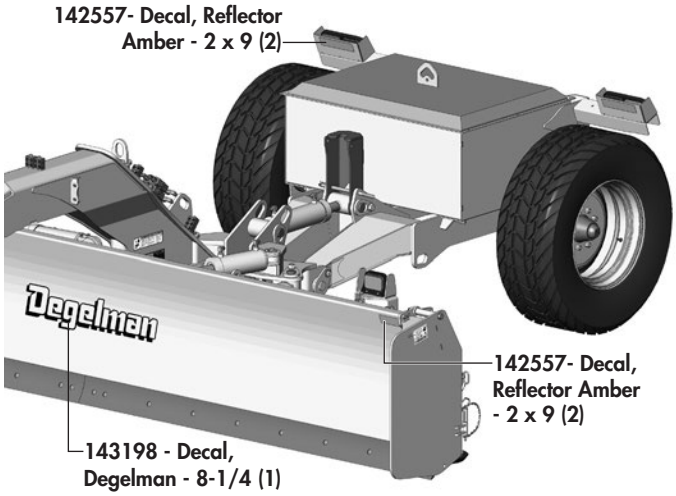

Troubleshooting

GENERAL TROUBLESHOOTING

In the following section, we have listed some of the problems, causes, and solutions that you may encounter. If you encounter a problem that is difficult to solve, even after having read through this troubleshooting section, please call your local dealer or distributor. Before you call, have this manual and the serial number from your unit ready.

SYMPTOM	PROBLEM	SOLUTION
Jerky lift or angle operation.	Low oil supply.	Check dozer and tractor for oil leaks and/or disconnected lines. Correct if necessary and add oil.
	Cold oil.	Raise and lower the dozer several times. In extremely cold weather, drive the tractor at half throttle while raising and lowering the dozer.
	Air in lift cylinders.	Bleed Cylinders
	Poor oil circulation.	Check oil filter in tractor hydraulic system. See tractor Operator's Manual.
	Defective crossover valve. *(Angling circuit)*	Replace unit.
Blade hopping or chattering when digging in the ground.	Operating speed is too fast.	Reduce operating speed.
	Depth of cut.	Change depth of cut. Could be too deep or too shallow.
Slow operating speed.	Improper hydraulic flow setting on the tractor.	Adjust the hydraulic flow on the tractor display or the tractor's selection control valve. See tractor Operator's Manual for tractor specific details.
Oil leaks.	Defective fittings or hoses.	Replace fittings or hoses.
	Loose connections.	Tighten connections.
	Worn or damaged O-ring seals at rod end of cylinder.	Replace 0-rings. *(Note: Seal manufacturer advises that small amounts of oil getting past seals is desirable.)*
Insufficient lift capacity.	Improper stroke control valve adjustment.	For proper adjustment, see your tractor dealer.
	Pump or valve not operating properly.	See your tractor dealer.

General Overview

TruGrade Component Overview

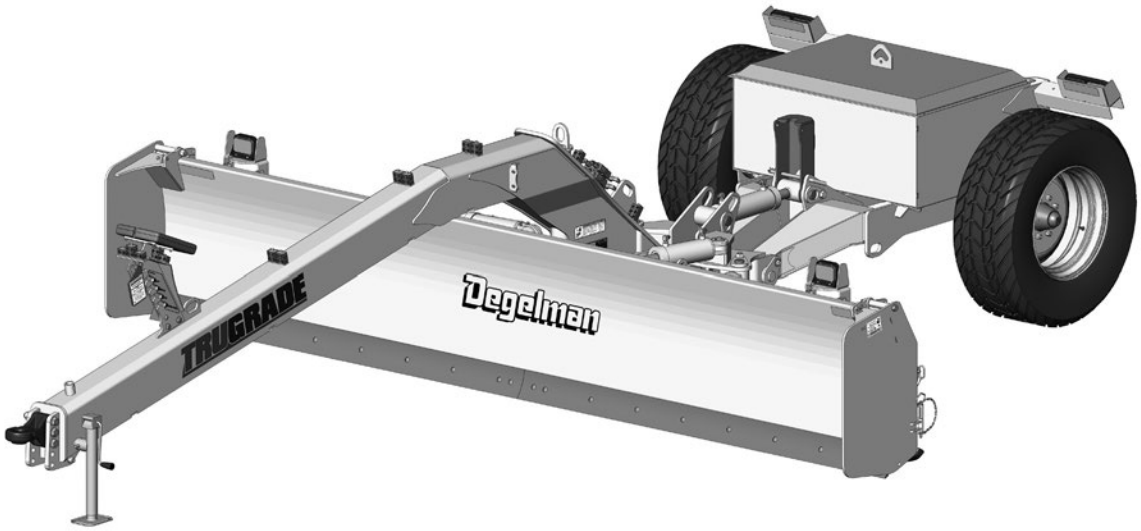

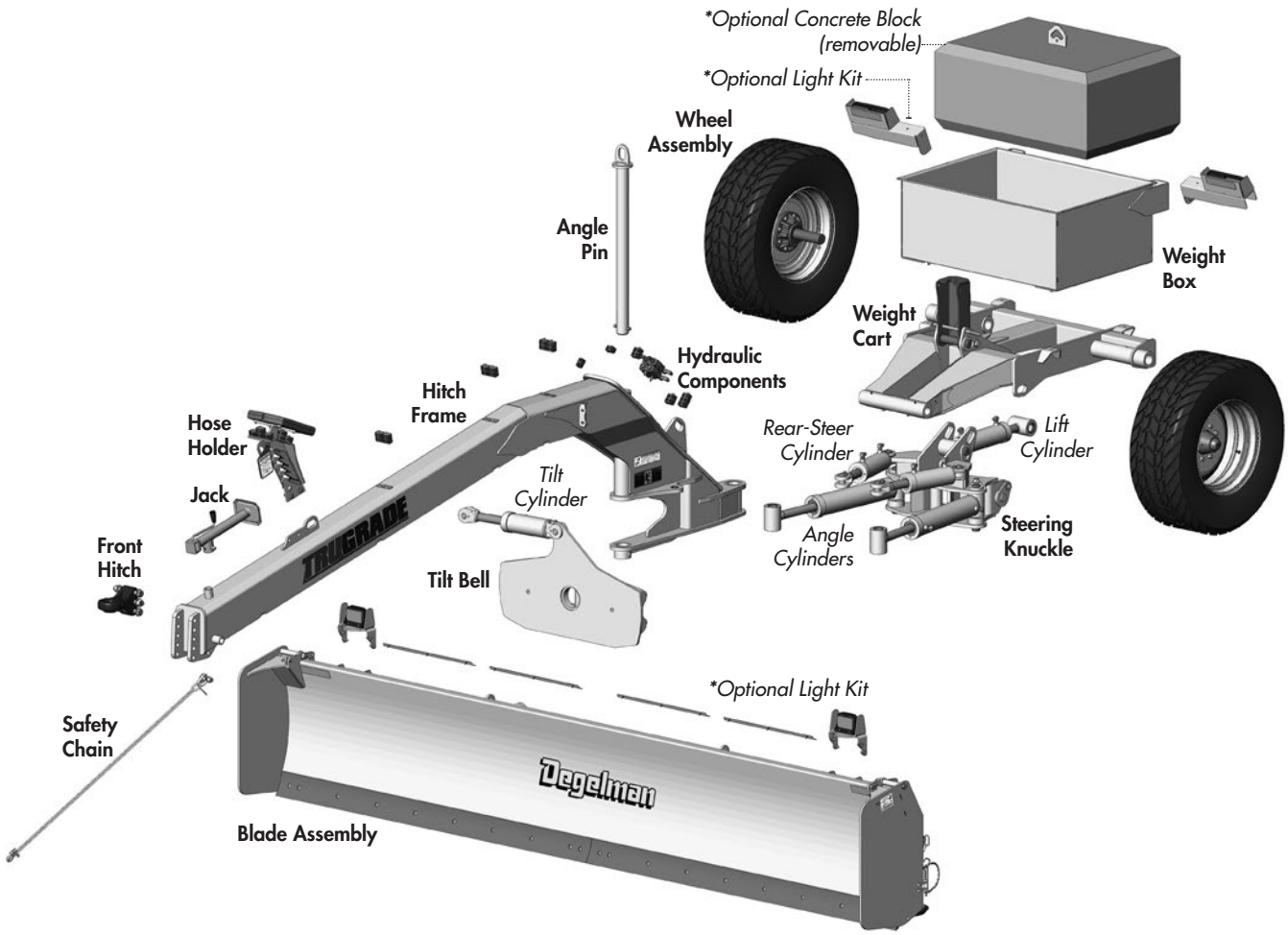

Blade Components

TruGrade Blade Overview

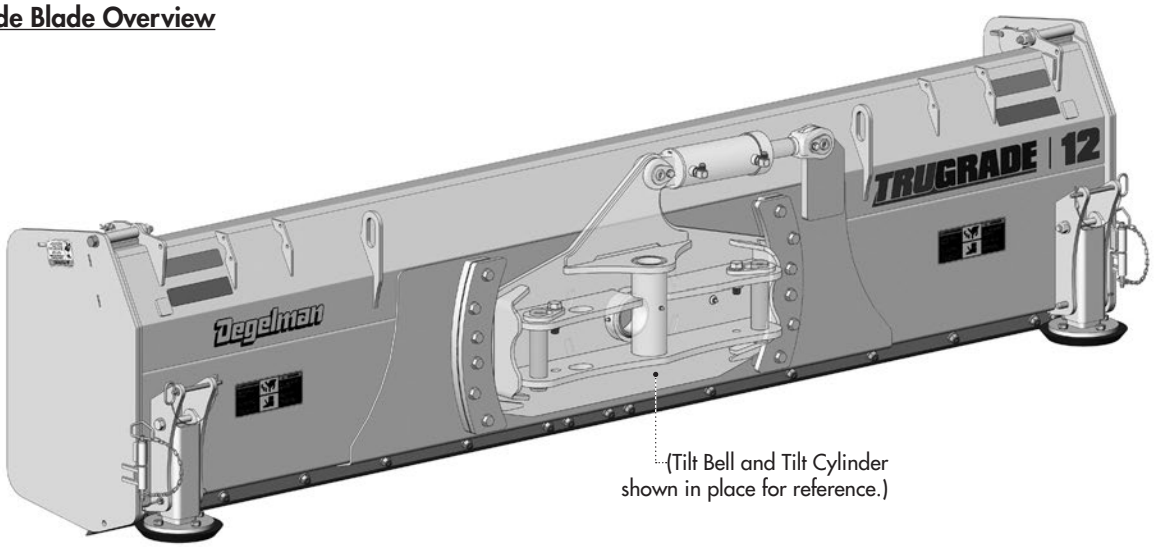

TruGrade Blade Components

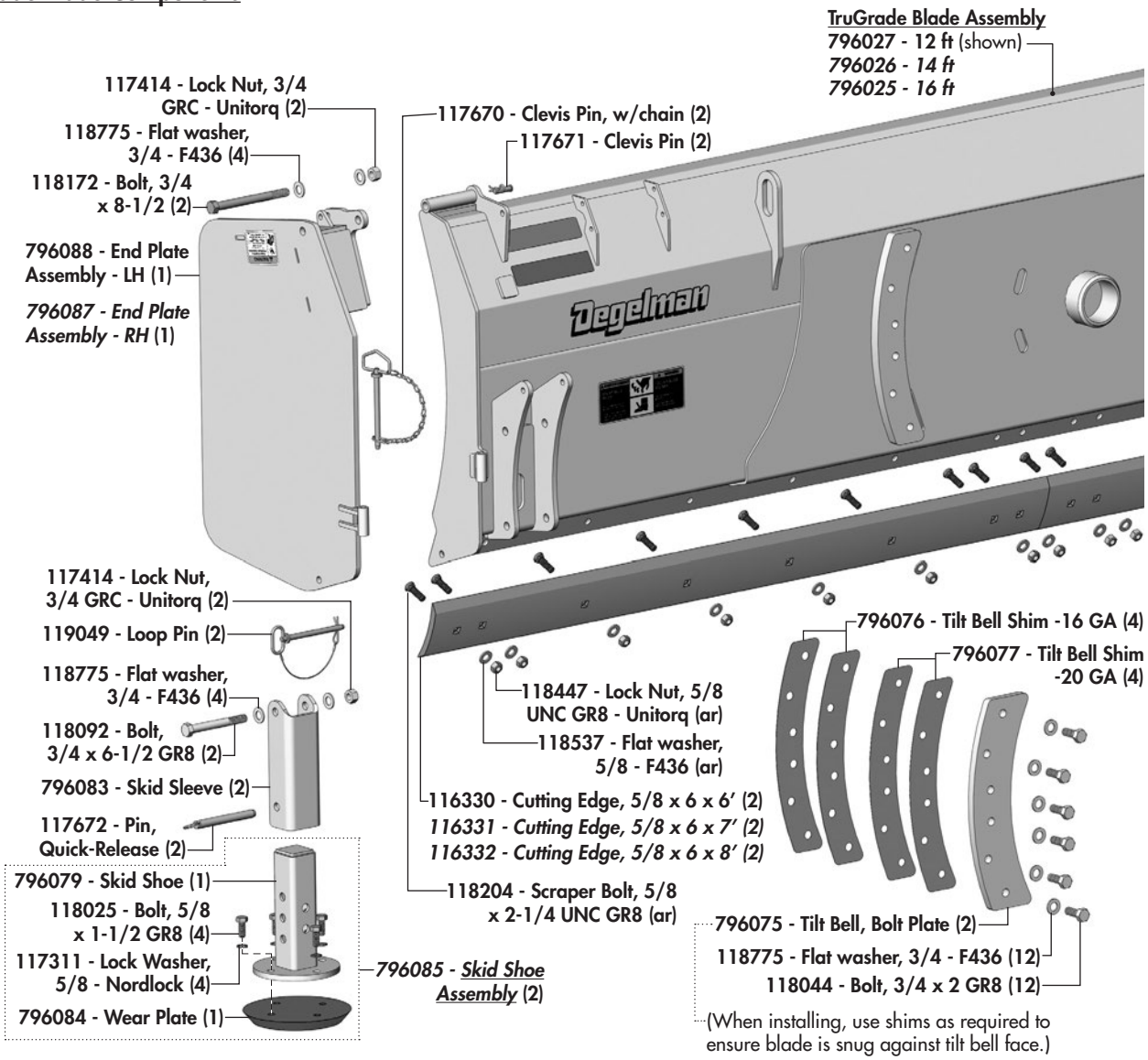

Hitch Frame Components

Front Hitch Components

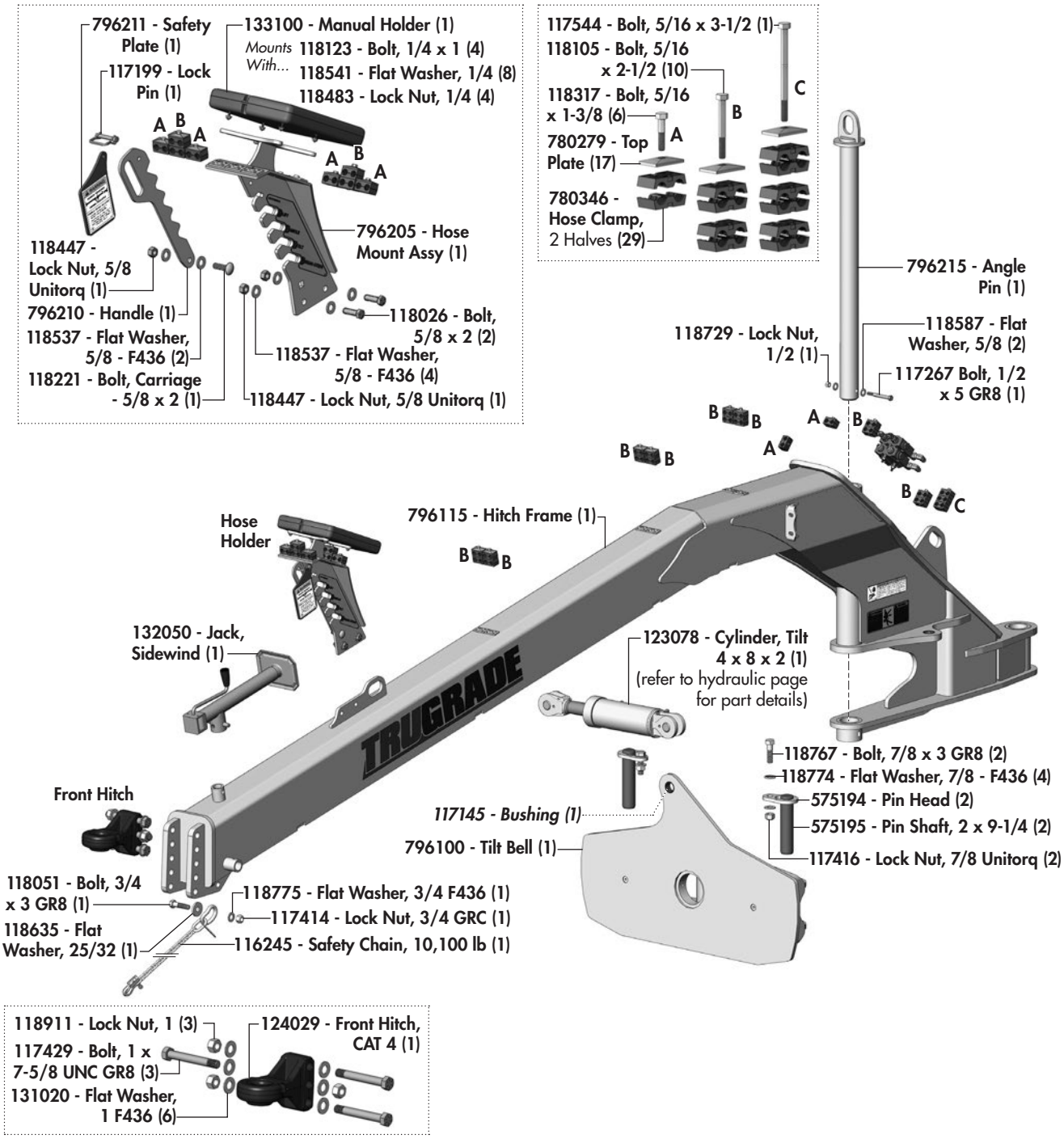

Rear Steer Components

Rear Steer Location Overview

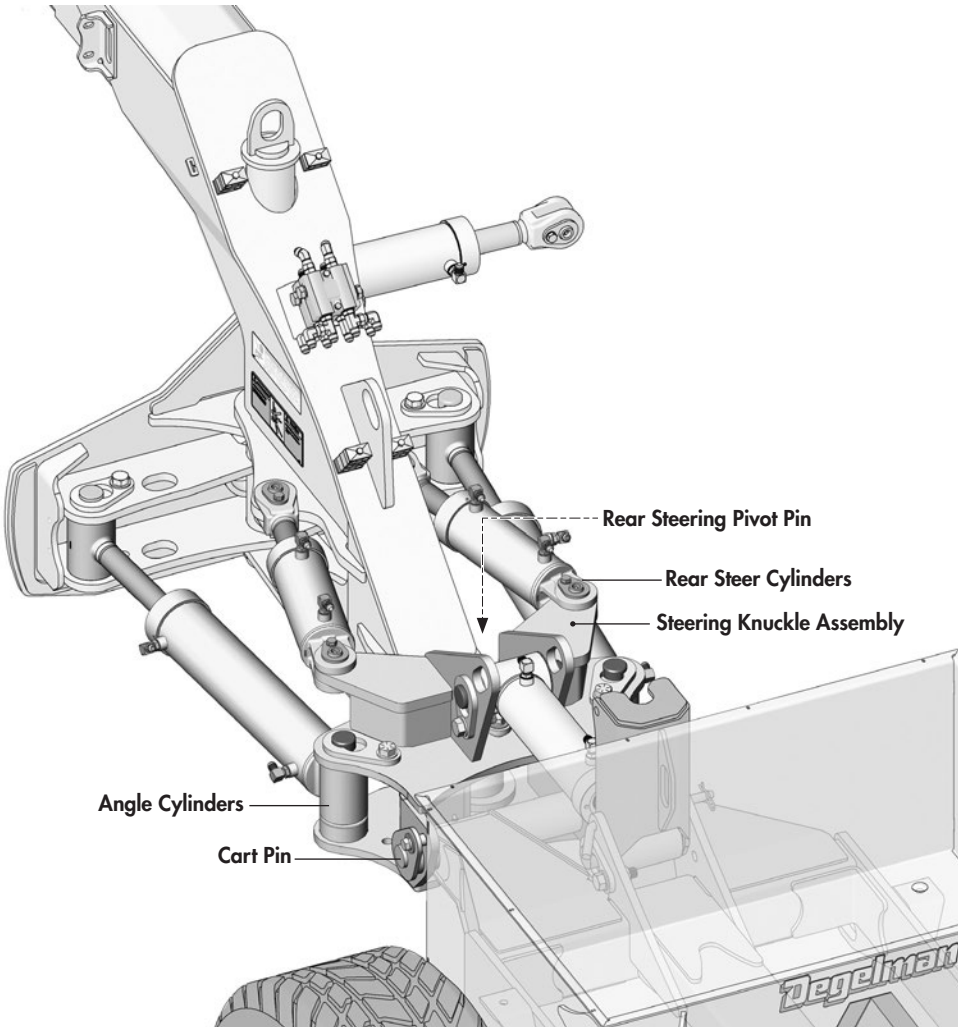

Rear Steer Exploded Overview

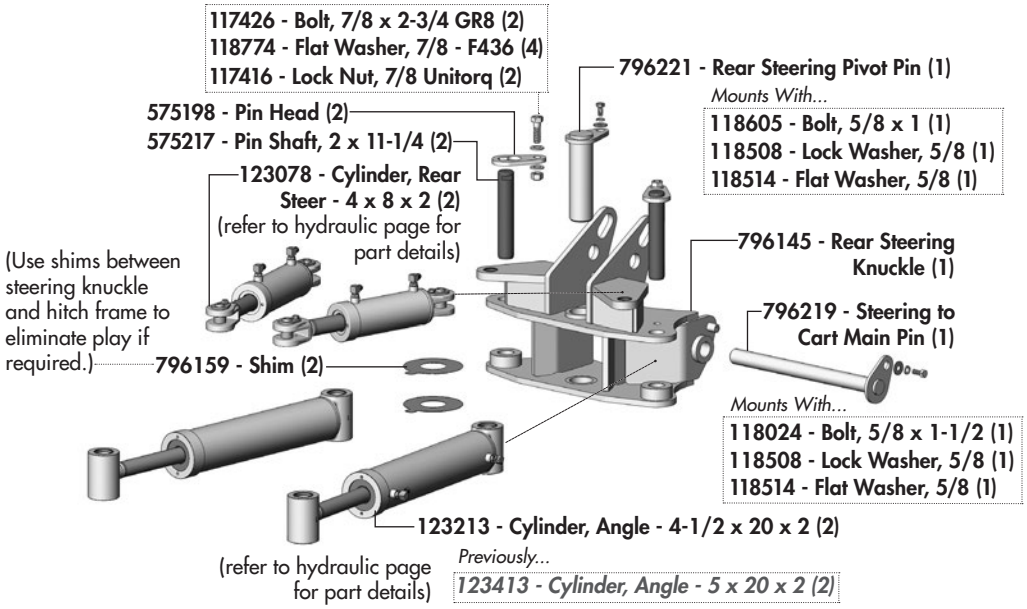

Weight Cart Components

Weight Cart Exploded Overview

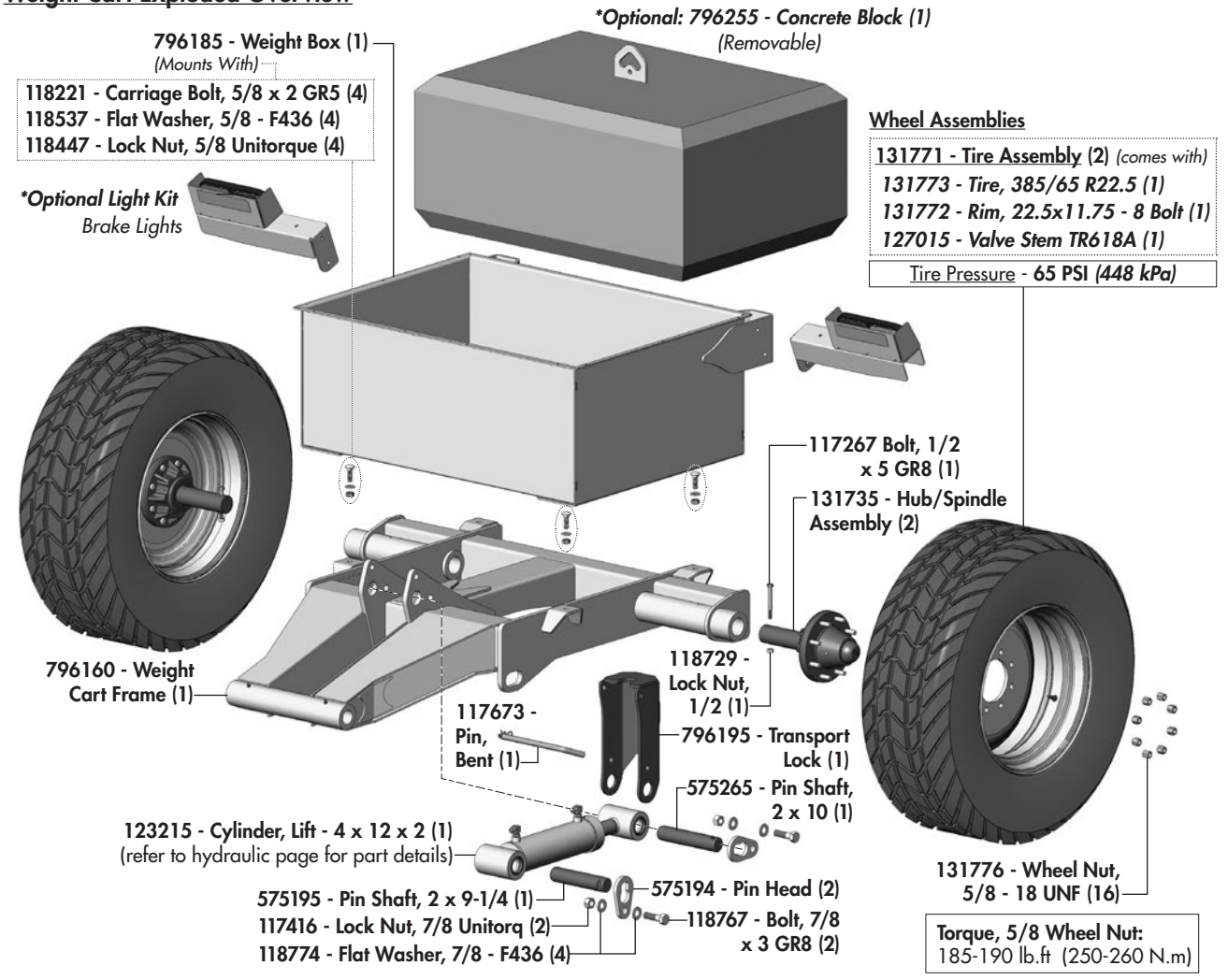

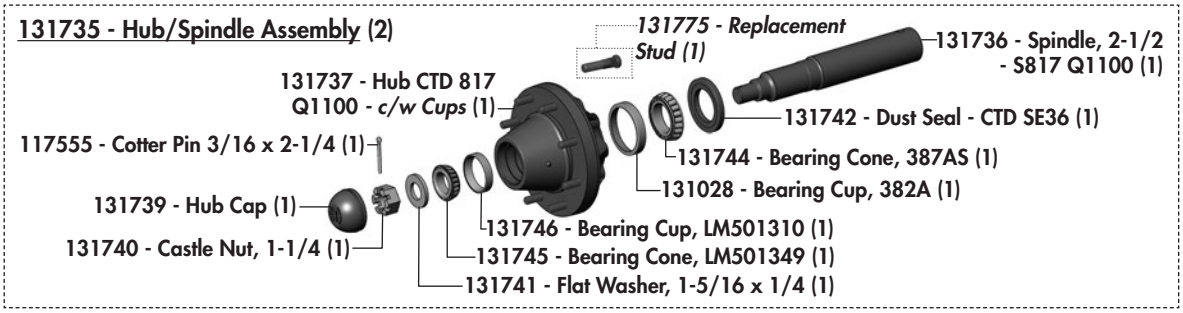

*Optional Light Kit Components

Optional Light Kit Overview

796245 - Optional Safety Light Kit (1)

796232 - Light Wiring Harness (1)

NOTE: The blade clearance lights can be ***adjusted for better visibility*** during transport.

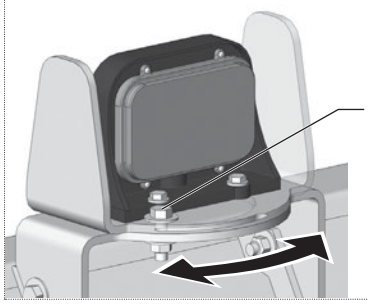

To adjust the lights, loosen adjustment bolts, swivel the light and light shield to the desired angle, and re-tighten the adjustment bolts.

Light Mount - Blade

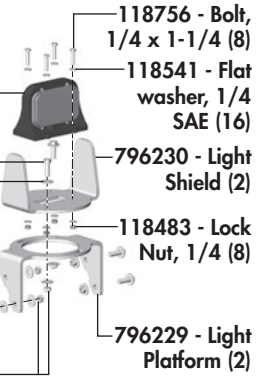



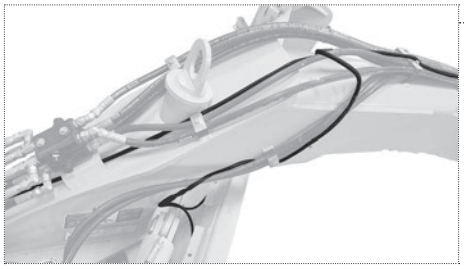



Light Mount - Brake (RH Shown)

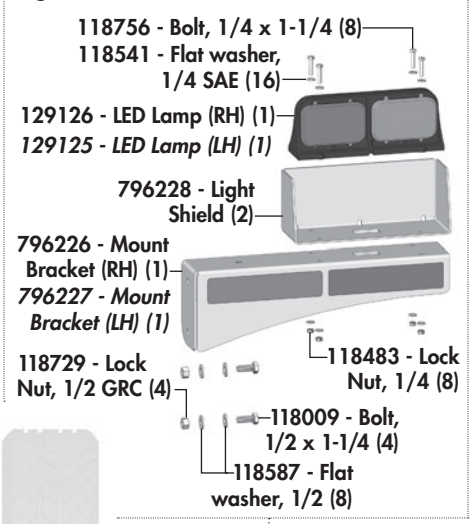

*Optional Light Kit Components

Wire Shield Installation Overview

	A	B	(C)
TruGrade 12	**10-1/4″**	*- Only install one shield. -*	
TruGrade 14	**3/4″**	**30-1/4″**	*(2″)*
TruGrade 16	**5-1/4″**	**38-1/4″**	*(5-1/2″)*

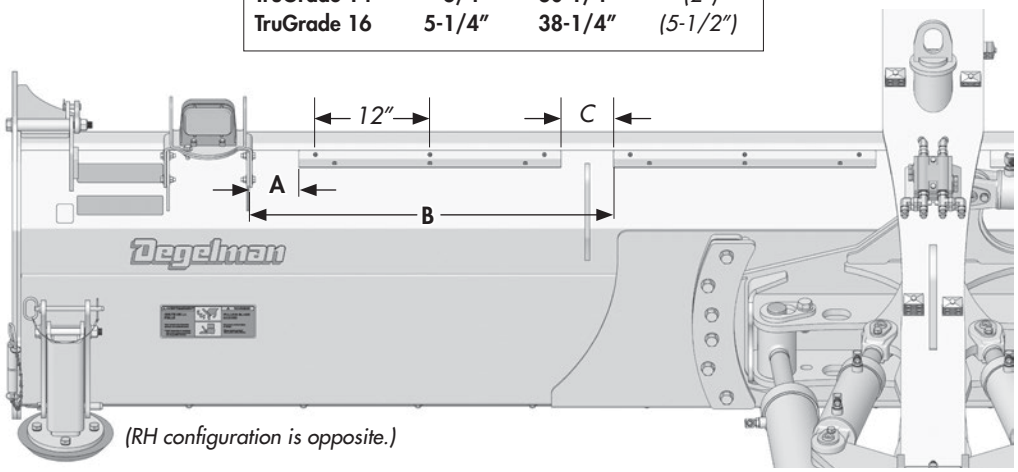

(RH configuration is opposite.)

NOTE: *You may need the following tools: Tape measure, tool to mark or scribe hole locations, drill, & 5/32 drill bit (for pilot holes), 5/16 wrench or socket for fastening screws.*



TruGrade 12 models only require one wire shield per side. 14 & 16 models require two per side.

Use the following as a guideline for install:

1. Position the first wire shield at the listed distance "A" in the above chart for the appropriate Tru-Grade model. Ensure the side with the three small holes is on top. Position the shield so it sits level, aligned along the welded seem, parallel to the top. *(Refer to diagram above.)* Mark/scribe the three holes for pilot drill hole locations.
2. For TruGrade 14 & 16 models, repeat step one with a second wire shield at position "B". The chart measurement "C" is a reference dimension to check the distance between the two positioned shields before drilling.
3. After marking the pilot hole positions in steps 1 & 2, and confirming the dimensions, drill the 5/32" pilot holes.
4. Install the wire shield(s) in place using the provided self-tapping screws and a 5/16 wrench or socket.
5. Repeat the procedure for the opposite side.

Hydraulic Layout - Lift Cylinder

Hydraulic Fittings Required

1	141581 - Coupler Tip, 3/4 ORB F	(2)
2	141830 - Coupler, Green (+)	(1)
3	141831 - Coupler, Green (-)	(1)
4	141515 - Connector, 3/4 JIC-m x ORB	(2)
5	141504 - 90° Elbow, 3/4 JIC-m x ORB	(2)

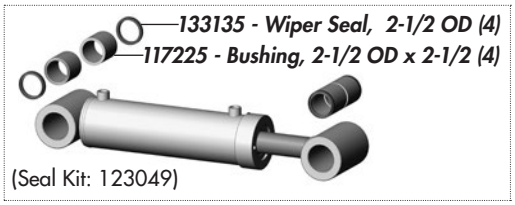

(Seal Kit: 123049)

Required Hoses for Lift Cylinders

Hoses, 3/8 - 3/4 JIC F-SW

(312) **126090 - Hose, 3/8 x 312 (1)**

(300) **126604 - Hose, 3/8 x 300 (1)**

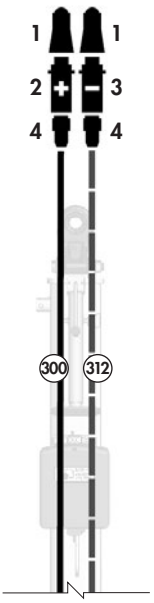

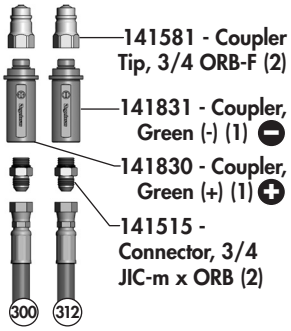

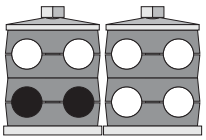

NOTE: *Route the lift cylinder hoses through the bottom-left hose blocks along the hitch.*

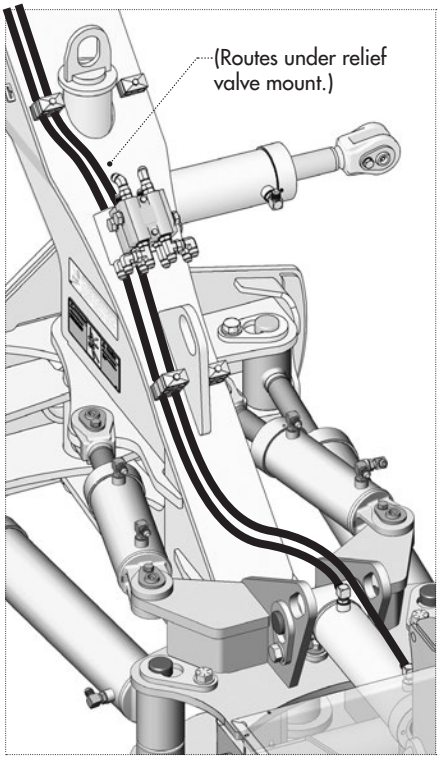

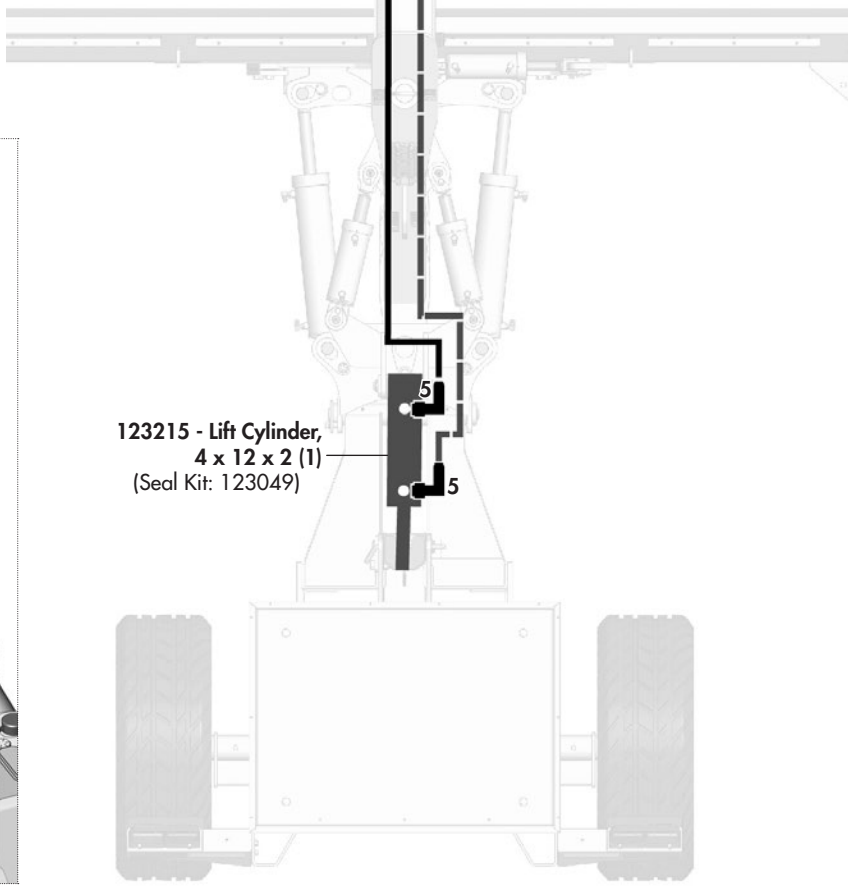

123215 - Lift Cylinder, 4 x 12 x 2 (1)
(Seal Kit: 123049)

Hydraulic Layout - Tilt Cylinder

Hydraulic Fittings Required

1	141581 - Coupler Tip, 3/4 ORB F	(2)
2	141834 - Coupler, Brown (+)	(1)
3	141835 - Coupler, Brown (-)	(1)
4	141515 - Connector, 3/4 JIC-m x ORB	(2)
5	141504 - 90° Elbow, 3/4 JIC-m x ORB	(2)

123078 - Tilt Cylinder, 4 x 8 x 2 (1)



(Seal Kit: 123079)



123236 - Pin, Kit - *includes*

122670 - Pin, 1-1/2 x 2-3/4 (2)
118924 - Flat Washer, .59 ID x .9 OD (2)
118796 - Shoulder bolt, 1/2 GR8 UNC (2)

Previous cylinder

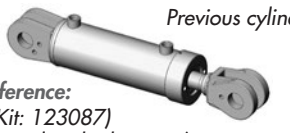

For reference:
(Seal Kit: 123087)
Previous Tilt Cylinder: 3-1/2 x 8 x 1-1/2

Required Hoses for Tilt Cylinders

Hoses, 3/8 - 3/4 JIC F-SW

(265) **126601 - Hose, 3/8 x 265 (2)**

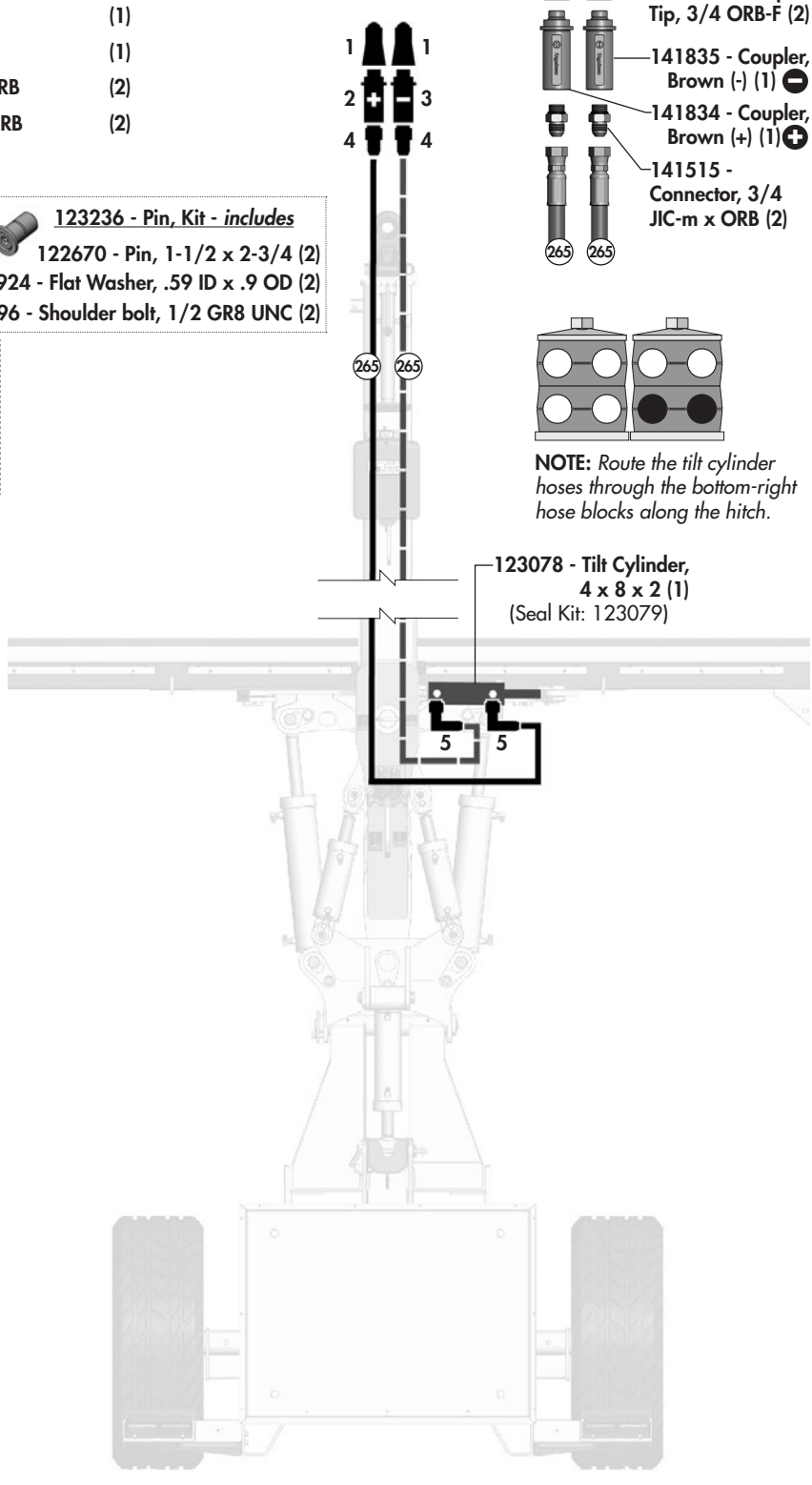

NOTE: *Route the tilt cylinder hoses through the bottom-right hose blocks along the hitch.*

Hydraulic Layout - Rear Steer Cylinders

Hydraulic Fittings Required

1		141581 - Coupler Tip, 3/4 ORB F	(2)
2		141836 - Coupler, Black (+)	(1)
3		141837 - Coupler, Black (-)	(1)
4		141515 - Connector, 3/4 JIC-m x ORB	(4)
5		141504 - 90° Elbow, 3/4 JIC-m x ORB	(4)
6		141527 - Tee 3/4 JIC-m x JIC-m x ORB	(2)
7		141518 - 90° Elbow, 3/4 JIC-m x JIC-f	(2)
8	3000 PSI	141594 - Relief Valve, 3/4 ORB (3000 PSI)	(1)



(Seal Kit: 123079)



123236 - Pin, Kit - *includes*
122670 - Pin, 1-1/2 x 2-3/4 (2)
118924 - Flat washer, .59 ID x .9 OD (2)
118796 - Shoulder bolt, 1/2 GR8 UNC (2)

Required Hoses for Rear Steer Cylinders

Hoses, 3/8 - 3/4 JIC F-SW

- (249) **126506 - Hose, 3/8 x 249 (2)**
- (44) **126583 - Hose, 3/8 x 44 (2)**
- (36) **126522 - Hose, 3/8 x 36 (2)**

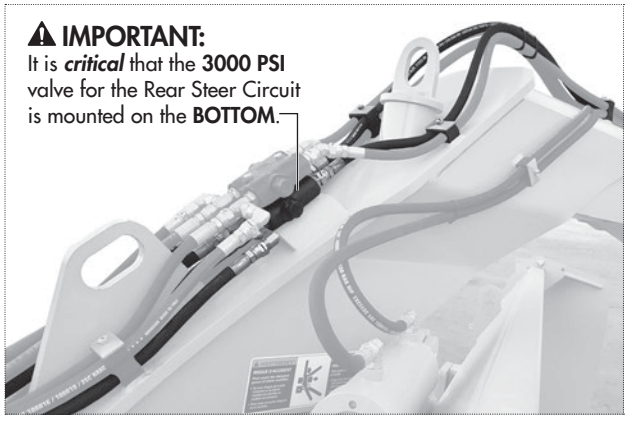

⚠ IMPORTANT:
It is ***critical*** that the **3000 PSI** valve for the Rear Steer Circuit is mounted on the **BOTTOM**.

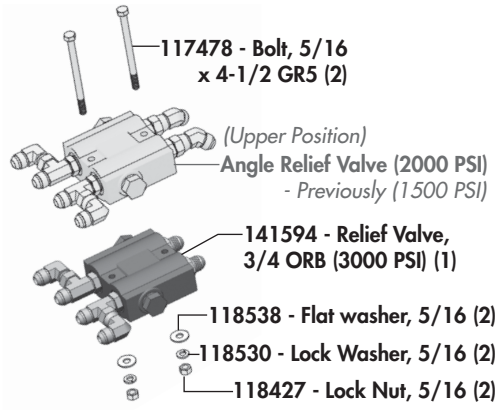

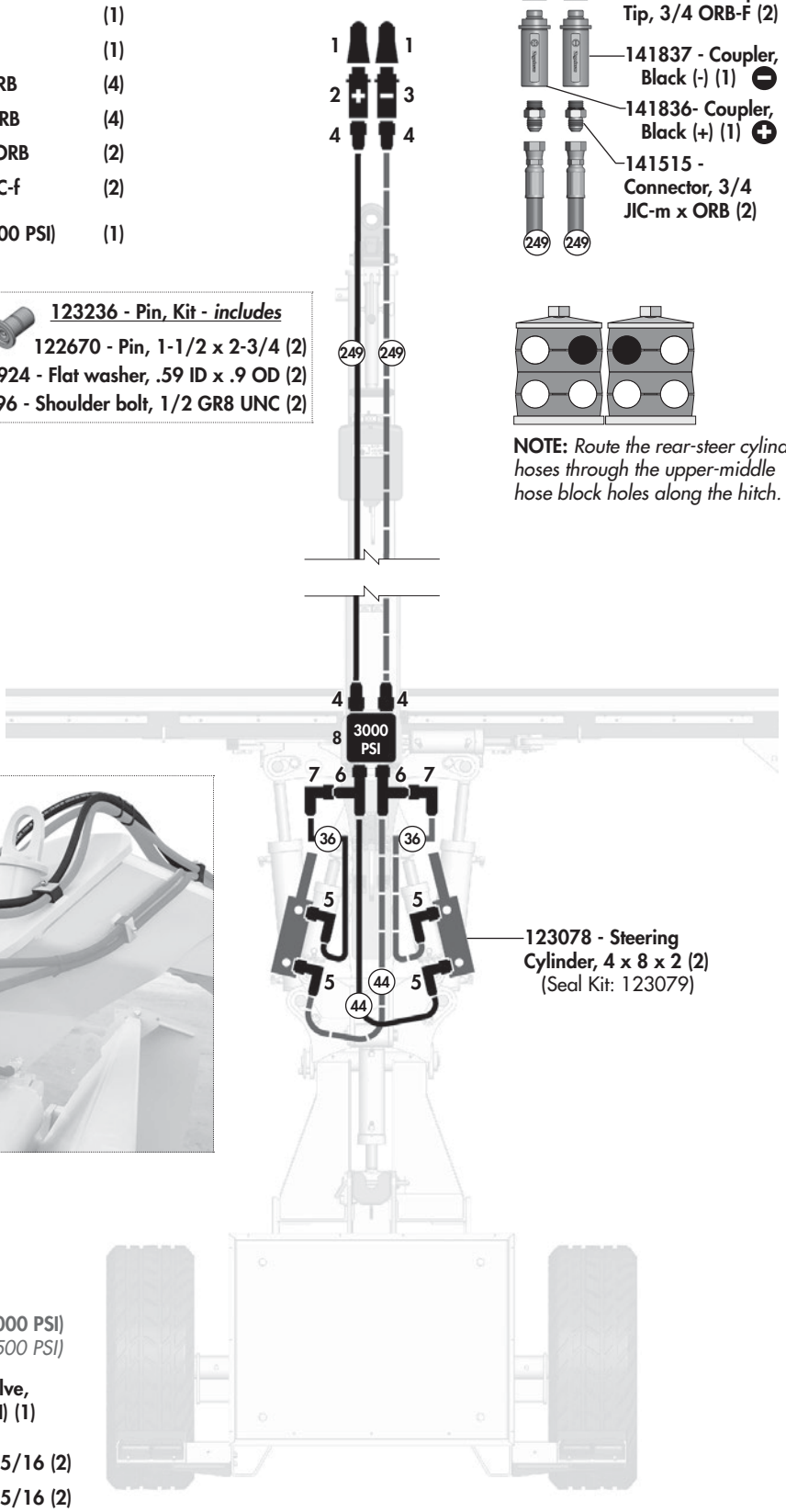

NOTE: *Route the rear-steer cylinder hoses through the upper-middle hose block holes along the hitch.*

Hydraulic Layout - Angle Cylinders

Hydraulic Fittings Required

1	141581 - Coupler Tip, 3/4 ORB F	(2)	
2	141832 - Coupler, Blue (+)	(1)	
3	141833 - Coupler, Blue (-)	(1)	
4	141515 - Connector, 3/4 JIC-m x ORB	(4)	
5	141504 - 90° Elbow, 3/4 JIC-m x ORB	(4)	
6	141527 - Tee 3/4 JIC-m x JIC-m x ORB	(2)	
7	141518 - 90° Elbow, 3/4 JIC-m x JIC-f	(2)	
8	141620 - 45° Elbow, 3/4 JIC-m x f-sw	(2)	
9	2000 PSI 141524 - Relief Valve, 3/4 ORB (2000 PSI)	(1)	(4-1/2 Cylinder)
	Previously...		
9	*1500 PSI 141775 - Relief Valve, 3/4 ORB (1500 PSI)*	*(0)*	*(5 Cylinder)*



123213 - Cylinder, 4-1/2: (Seal Kit: 123214)
Previously - ***123413 - Cylinder, 5:*** *(Seal Kit: 123415)*

117225 - Bushing, 2-1/2 OD x 2-1/2 (4)

133135 - Wiper Seal, 2-1/2 OD (4)

Required Hoses for Angle Cylinders

Hoses, 3/8 - 3/4 JIC F-SW

- (249) **126506 - Hose, 3/8 x 249 (2)**
- (75) **126550 - Hose, 3/8 x 75 (2)**
- (70) **126577 - Hose, 3/8 x 70 (2)**

⚠ IMPORTANT:
It is ***critical*** that the **2000 PSI** valve for the Angle Circuit is mounted on **TOP**.

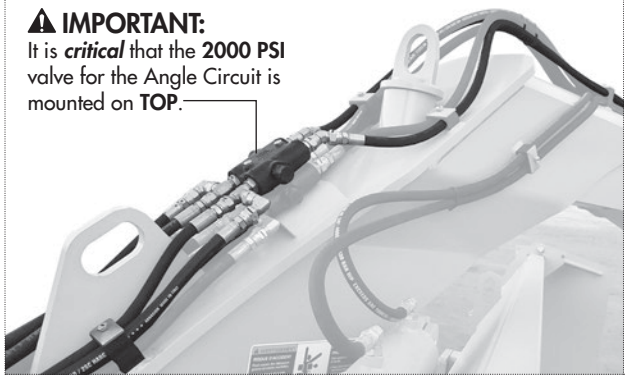

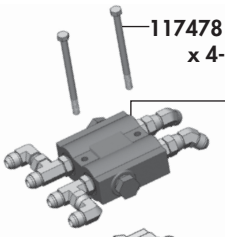

117478 - Bolt, 5/16 x 4-1/2 GR5 (2)

141524 - Relief Valve, 3/4 ORB (2000 PSI) (1)
Previously...
141775 - Relief Valve, 3/4 ORB (1500 PSI) (1)

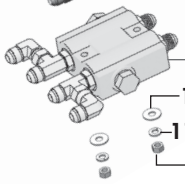

(Lower Position)
Rear Steer Valve (3000 PSI)

118538 - Flat washer, 5/16 (2)

118530 - Lock Washer, 5/16 (2)

118427 - Lock Nut, 5/16 (2)

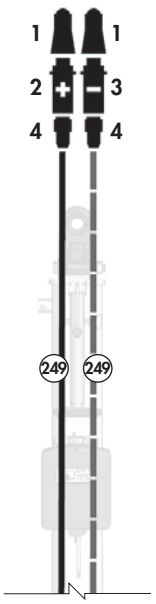

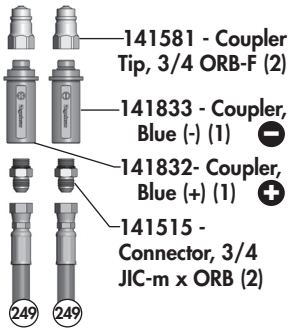

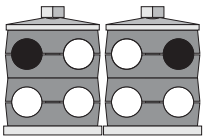

NOTE: *Route the angle cylinder hoses through the upper-outside hose block holes along the hitch.*

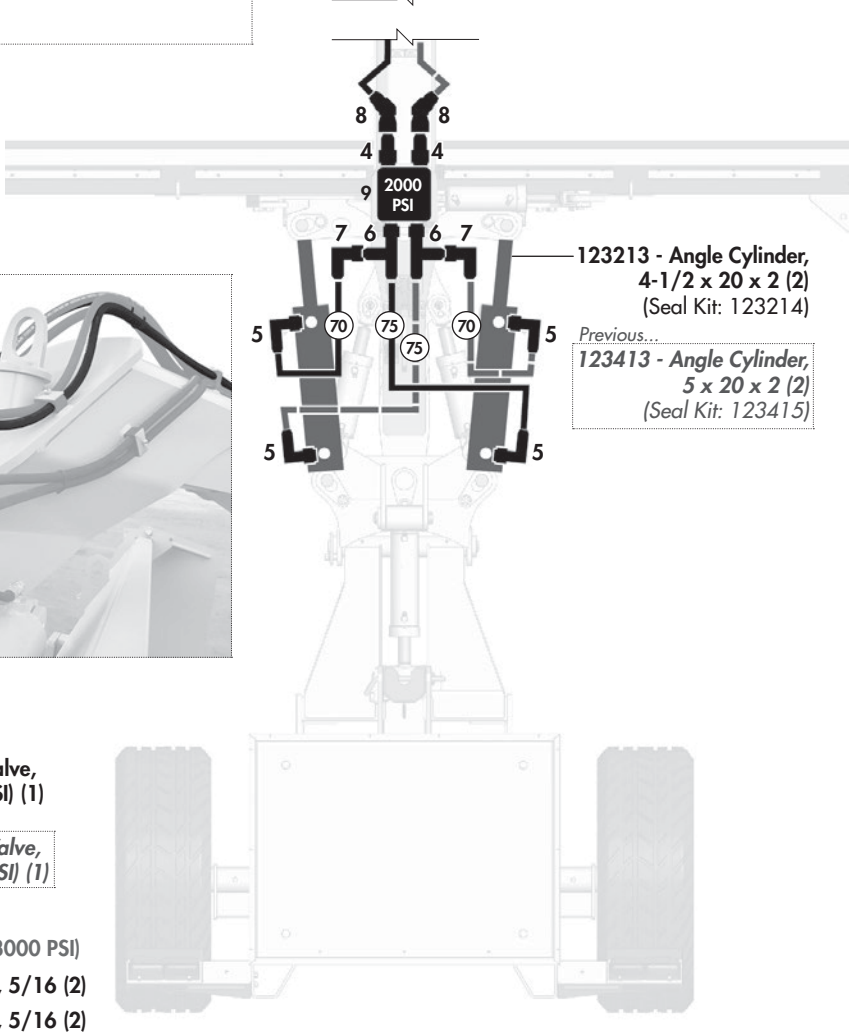

123213 - Angle Cylinder, 4-1/2 x 20 x 2 (2)
(Seal Kit: 123214)

Previous...
123413 - Angle Cylinder, 5 x 20 x 2 (2)
(Seal Kit: 123415)

Warranty

Retail Customer's Responsibility Under Degelman Warranty.

It is the retail customer and/or Operator's responsibility to read the Operator's Manual, to operate, lubricate, maintain and store the equipment in accordance with all instructions and safety procedures. Failure of the operator to read the operators manual is a misuse of this equipment.

It is the retail customer and/or operators responsibility to inspect the product and to have any part(s) repaired or replaced when continued operation would cause damage or excessive wear to other parts or cause safety hazard.

It is the retail customer's responsibility to deliver the product to the authorized Degelman dealer, from whom he purchased it, for service or replacement of defective parts, which are covered by warranty. Repairs to be submitted for warranty consideration must be made within forty-five days of failure.

It is the Retail Customer's responsibility for any cost incurred by the dealer for hauling of the product for the purpose of performing a warranty obligation or inspection.

WARRANTY INFORMATION

Make certain the warranty registration card has been forwarded to:

Degelman Industries LP
Box 830 -272 Industrial Dr.
Regina, SK, Canada
S4P 3B1

Always give your dealer the serial number of your Degelman product when ordering parts or requesting service or other information.

In the space provided record the model number, the serial number and the date of purchase to assist your dealer in providing you with prompt and efficient service.

SERIAL NUMBER: _____

MODEL NUMBER: _____

DATE OF PURCHASE: _____



Warranty

2 Year
Limited Warranty

Degelman Industries LP ("Degelman") warrants to the original purchaser of any new Degelman equipment, purchased from an authorized Degelman dealer, that the equipment will be free from defects in material and workmanship for a period of two (2) years from the date of delivery, for non-commercial use (including farm, institutional, government, and municipality) and (1) year from the date of delivery for commercial use. The obligation of Degelman to the purchaser under this warranty is limited to the repair or replacement of defective parts in the first year and to the provision, but not the installation of replacement parts in the second year. Degelman reserves the right to inspect any equipment or parts which are claimed to have been defective in material or workmanship.

This warranty limits its replacement or repair coverage to what is consistent with the warranty of Degelman's suppliers of purchased components. Replacement or repair parts installed in the equipment covered by this limited warranty are warranted for ninety (90) days from the date of delivery of such part or the expiration of the applicable new equipment warranty period, which ever occurs later. Warranted parts shall be provided at no cost to the user at an authorized Degelman dealer during regular working hours. Warranted replacement parts will either be replaced or rebuilt at Degelman's discretion.

Disclaimer of implied warranties & consequential damages

This warranty shall not be interpreted to render Degelman Industries LP liable for injury, death, property damage or damages of any kind, whether direct, consequential, or contingent to property. Without limiting the generality of the foregoing, Degelman shall not be liable for damages resulting from any cause beyond its reasonable control, including, without limitation, loss of crops, any expense or loss of labour, supplies, rental machinery or loss of use.

No other warranty of any kind whatsoever, express or implied is made with respect to this sale; and all implied warranties of merchantability and fitness for a particular purpose which exceed the obligations set forth in this written warranty are hereby disclaimed and excluded from this sale. This exclusion shall not apply in any jurisdiction where it is not permitted by law.

This limited warranty shall not apply:

1. If, in the sole opinion of Degelman, the unit has been subjected to misapplication, abuse, misuse, negligence, accident or incorrect installation.
2. To any goods that have sustained damage or deterioration attributable to a lack of routine maintenance (eg. Re-torque of mounting hardware.)
3. If parts not made or supplied by Degelman have been used in the connection with the unit, if, in the sole judgement of Degelman such use affects its performance, safety, stability or reliability.
4. If the unit has been altered or repaired outside of an authorized Degelman dealership in a manner which, in the sole judgement of Degelman, affects its performance, safety, stability or reliability.
5. To expendable or wear items such as cutting edges, skid shoes, and any other items that in the company's sole judgement is a wear item.

No employee or representative of Degelman Industries LP is authorized to change this limited warranty in any way or grant any other warranty unless such change is made in writing and signed by the Degelman Service Manager.

This limited warranty is subject to any future availability of supply, which may directly affect Degelman's ability to obtain materials or manufacture replacement parts.

Degelman reserves the right to make improvements in design or changes in specifications at any time, without incurring obligations to owners of equipment previously delivered.

This limited warranty is subject to compliance by the customer to the enclosed *Retail Customer's Responsibility Under Degelman Warranty.*

Make certain the warranty registration card has been forwarded to:

Degelman Industries LP
Box 830
272 Industrial Dr.
Regina, SK, Canada
S4P 3B1

© 2025 Degelman Industries LP