Degelman

OPERATOR & PARTS MANUAL

PRO-TILL®
HIGH PERFORMANCE TILLAGE

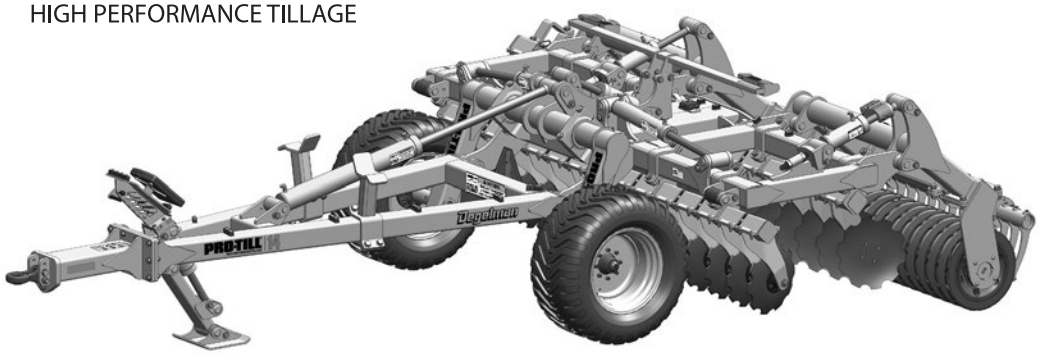





PRO-TILL® HIGH PERFORMANCE TILLAGE | 14 | 17 | 20

143387 v1.9

DEGELMAN INDUSTRIES LP
BOX 830-272 INDUSTRIAL DRIVE,
REGINA, SK, CANADA, S4P 3B1
FAX 306.543.2140 PH 306.543.4447
1.800.667.3545 DEGELMAN.COM

PRO-TILL 14/17/20 NT

QUICK-START GUIDE*
for PRO-TILL 14/17/20NT

* Refer to operators manual for complete safety and operation info.

REMEMBER! You must complete **Product Registration** to be eligible for **Warranty.**

Degelman

A Connect Hydraulics

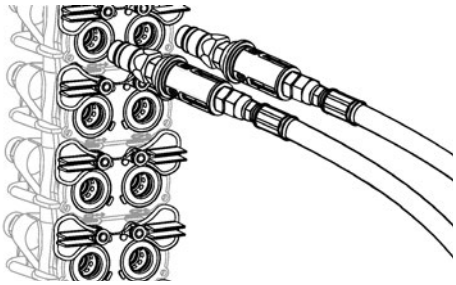

1. DEPTH
2. WINGS
3. TRANSPORT
4. JACK

CONSTANT PRESSURE 2 - Only for Pro-Till 20NT models with constant wing pressure kit installed -

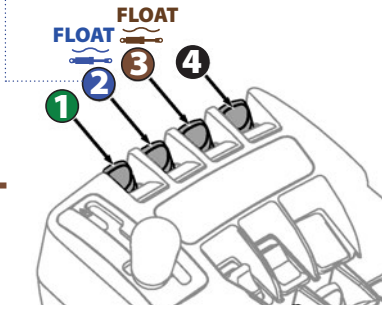

1 IMPORTANT:
Re-phase and cycle oil in the Depth Control Cylinders before use *(especially after long periods or storage).*



2 IMPORTANT: - *PT20NT Constant Wing Pressure Models ONLY* -
The ***Wing Cylinder Circuit*** includes a ***Down Pressure Valve***.
- Operator must engage wing circuit hydraulics ***constantly*** in the extended direction to ensure constant down pressure.
- Adjust wing circuit flow down to 20-30% to reduce heat build-up.

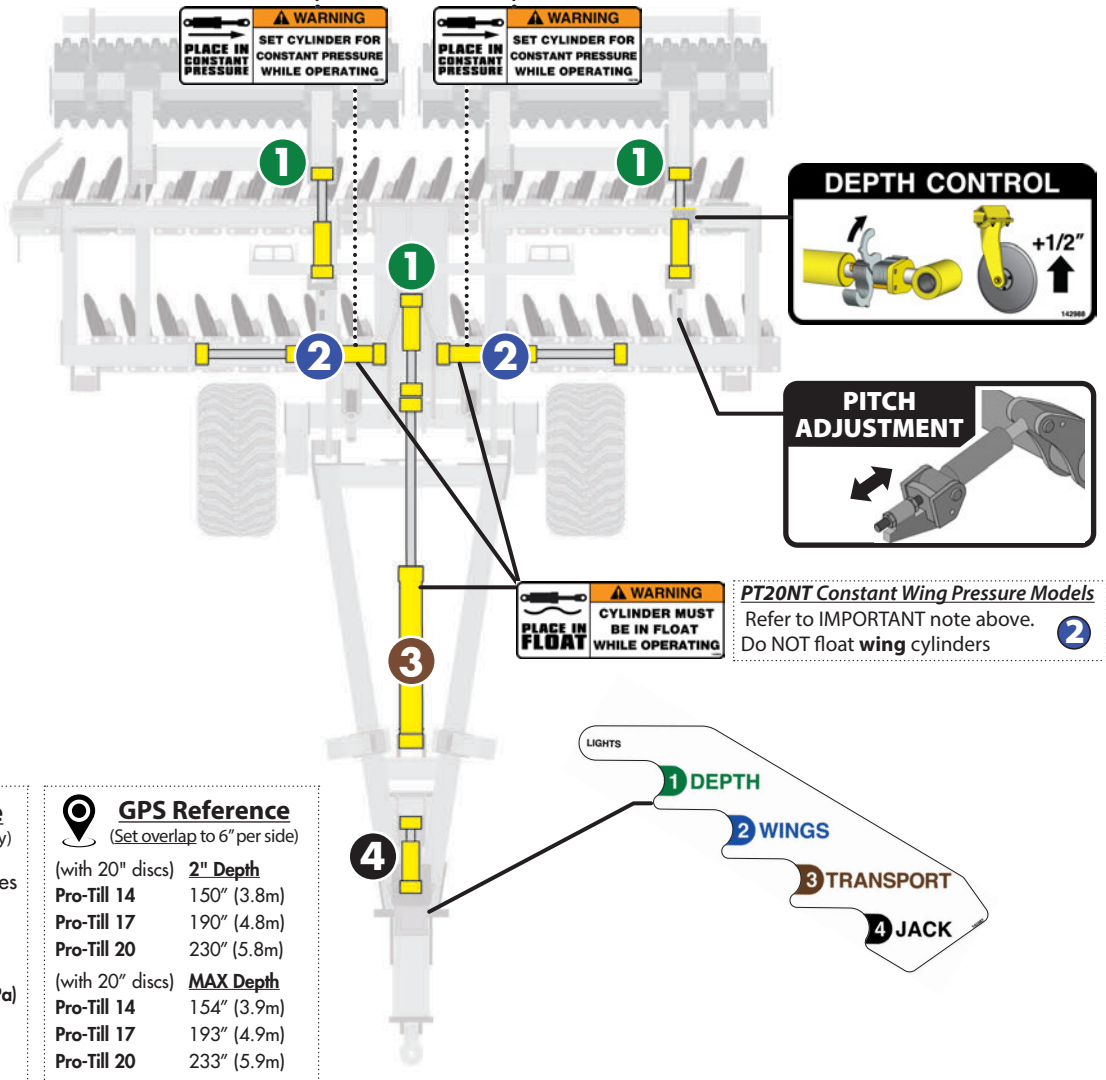

PT20NT Constant Wing Pressure Models
Refer to IMPORTANT note above. 2
Do NOT float **wing** cylinders

Maintenance
(Check Machine Daily)

- Hydraulic Connections/Hoses
- Working points & pins
- Hubs & Spindles
- Tire Pressure: **41 PSI (283 kPa)**
- Check for missing, worn or damaged parts.

* Refer to operators manual for complete safety and operation info.

GPS Reference
(Set overlap to 6" per side)

(with 20" discs)	2" Depth
Pro-Till 14	150" (3.8m)
Pro-Till 17	190" (4.8m)
Pro-Till 20	230" (5.8m)
(with 20" discs)	**MAX Depth**
Pro-Till 14	154" (3.9m)
Pro-Till 17	193" (4.9m)
Pro-Till 20	233" (5.9m)

(Consider setting the GPS to include a 6" implement offset to the right)

B Put in Field Position

i)



ii)

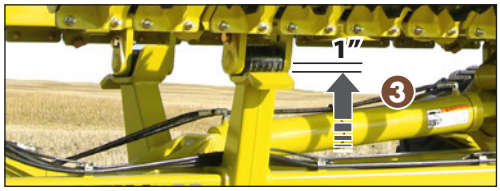

iii)



iv)



v) **IMPORTANT**: Operator **must** read and understand the tractor manual in order to place the required hydraulic circuits into **float position** or **constant pressure position**.



3 *Float Transport Cylinders (All models)*

2 *Float Wing Cylinders*



2 *- PT20NT Models with Constant Pressure Wing Cylinders ONLY-*

C Set Cutting Depth

IMPORTANT: Re-phase and cycle oil in the Depth Control Cylinders 1 before use. This is especially important after long periods of storage.

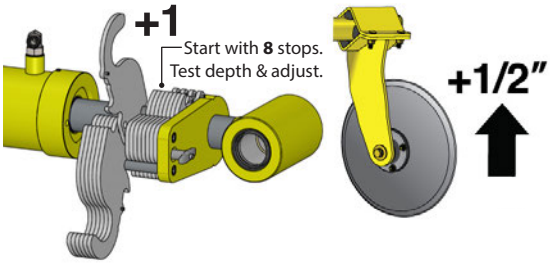

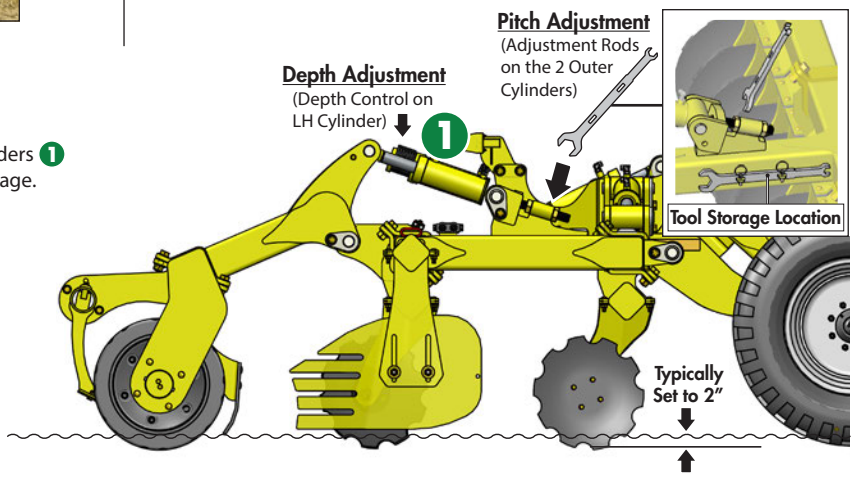

D Test. Check. Adjust.

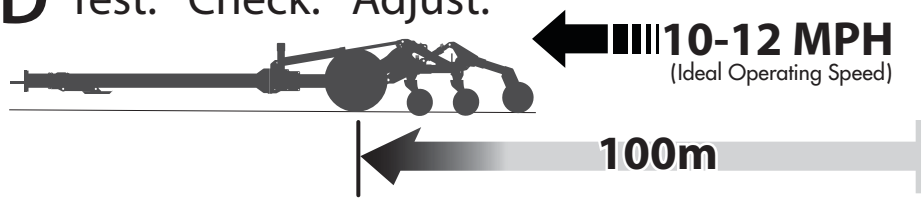

Scraper Position Overview (Rubber Rollers)

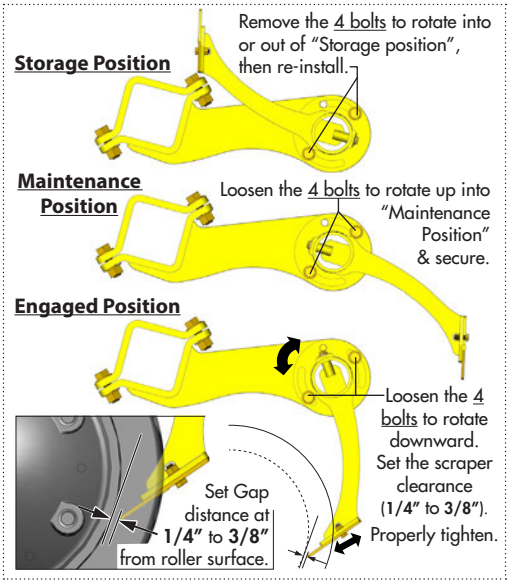

E Raise 1 for Headland Turns.

F ⚠ MAX Transport Speed: 40 km/h (25 MPH)

Degelman

PRO-TILL®

HIGH PERFORMANCE TILLAGE

**** Reference Sheet Quick-Start Guide***

OPERATORS SECTION - TABLE OF CONTENTS

IMPORTANT Safety Notice

Introduction	***1***
Safety	***2***
Hook-Up	***4***
Transport	***5***
Transport to Field Position	*6*
Field to Transport Position	*7*
Operation	***8***
Pre-Operation Checklist	*8*
Operation Guidelines / Suggestions	*9*
Setting Disc Depth	*10*
Rock Ejector / Scraper Settings	*12*
Adjustments: Rephasing Cylinders	*15*
Troubleshooting	***16***
Service & Maintenance	***18***
Maintenance Checklist	*18*
Repair - Pressed Bushing	*19*
Repair - Wheel Hub	*22*
Repair - Hyd Cylinder Repair	*23*
Decal Location Overview	*24*

Maintenance Free Pins & Bushings

⚠ **IMPORTANT:** *INSTALL DRY*

Do NOT use any oil/grease/lubricant on pin or bushing surfaces when installing the maintenance free pins into composite bushings.



PARTS SECTION - TABLE OF CONTENTS

Pro-Till Section Overview	*25*
Warranty	***51***

DEGELMAN INDUSTRIES LP

BOX 830-272 INDUSTRIAL DRIVE,
REGINA, SK, CANADA, S4P 3B1
FAX 306.543.2140 PH 306.543.4447
1.800.667.3545 DEGELMAN.COM

⚠ **IMPORTANT:**



READ MANUAL

Degelman

IMPORTANT SAFETY REMINDER

⚠ DANGER - NEVER PARK, UNHOOK, or SERVICE Pro-Till with REAR WINGS *RAISED*

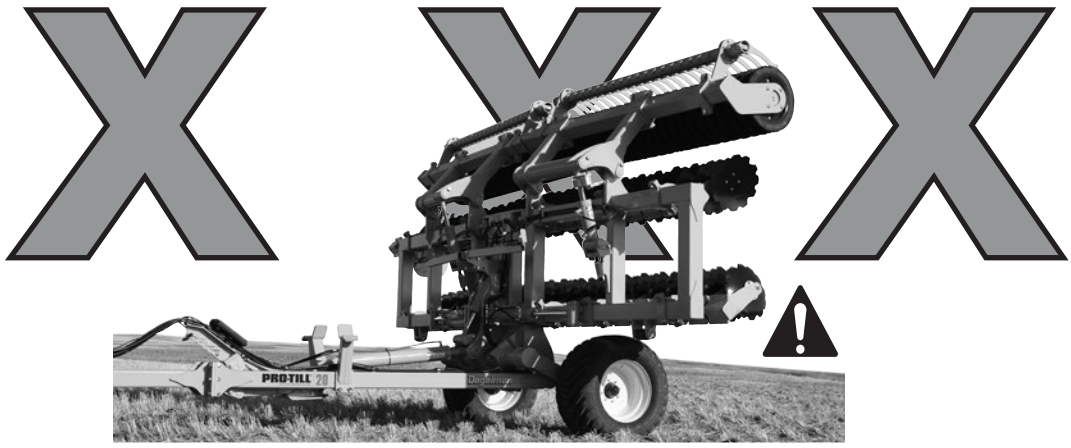



⚠ DANGER

If the front hitch becomes disconnected in this position the front hitch will raise suddenly and the back of the machine will drop!

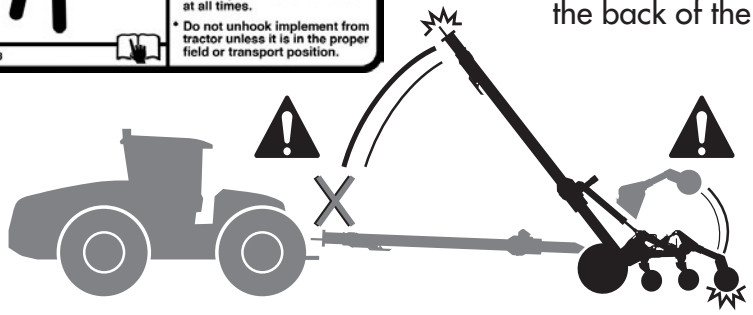



PRO-TILL®
HIGH PERFORMANCE TILLAGE

CHANGING DISCS AND SERVICING

The best position to safely change or service the discs on the Pro-Till is when it is secured in the winged forward transport position.

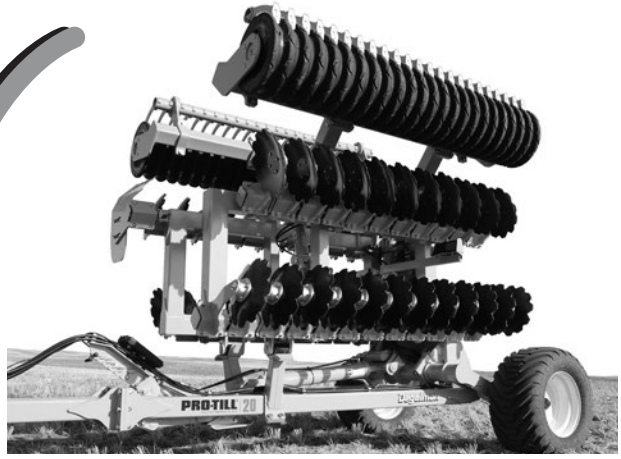

Introduction

PRO-TILL®
HIGH PERFORMANCE TILLAGE

CONGRATULATIONS on your choice of a Degelman PRO-TILL to complement your farming operation. It has been designed and manufactured to meet the needs of a discerning agricultural market. Degelman PRO-TILL shreds heavy fall residue, opens up spring fields, levels ruts, destroys clods and produces an absolutely perfect seed bed. Degelman PRO-TILL is the fastest and most versatile piece of tillage equipment you will ever own. Use this manual as your first source of information about this machine.

TO THE NEW OPERATOR OR OWNER - Safe, efficient and trouble free operation of your Degelman PRO-TILL requires that you and anyone else who will be operating or maintaining it, read and understand the Safety, Operation, Maintenance and Troubleshooting information contained within this manual.

By following the operating instructions in conjunction with a good maintenance program your machine will provide many years of trouble-free service. Keep this manual handy for frequent reference and to pass on to new operators or owners. Call your Degelman Dealer if you need assistance, information, or additional copies of the manual.

OPERATOR ORIENTATION - The directions left, right, front and rear, as mentioned throughout the manual, are as seen from the tractor drivers' seat and facing in the direction of travel.

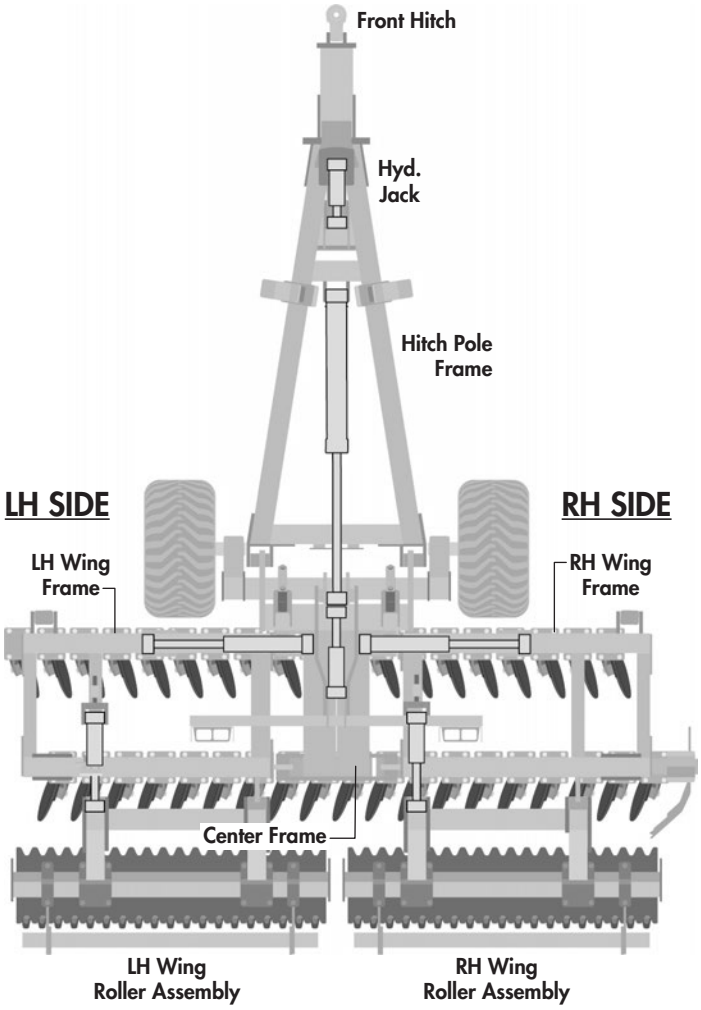

Why is SAFETY important to YOU?

3 **BIG** Reasons:

- Accidents Can Disable and Kill
- Accidents Are Costly
- Accidents Can Be Avoided



SAFETY ALERT SYMBOL

The **Safety Alert Symbol** identifies important safety messages applied to the PRO-TILL and in this manual. When you see this symbol, be alert to the possibility of **injury or death**. Follow the instructions provided on the safety messages.

The **Safety Alert Symbol** means:

ATTENTION!
BECOME ALERT!
YOUR SAFETY IS INVOLVED!

SIGNAL WORDS

Note the use of the Signal Words: **DANGER**, **WARNING**, and **CAUTION** with the safety messages. The appropriate Signal Word has been selected using the following guidelines:

DANGER

DANGER: Indicates an imminently hazardous situation that, if not avoided, **WILL** result in death or serious injury if proper precautions are not taken.

WARNING

WARNING: Indicates a potentially hazardous situation that, if not avoided, **COULD** result in death or serious injury if proper precautions are not taken.

CAUTION

CAUTION: Indicates a potentially hazardous situation that, if not avoided, **MAY** result in minor or moderate injury if proper practices are not taken, or, serves as a reminder to follow appropriate safety practices.

SAFETY

YOU are responsible for the safe operation and maintenance of your Degelman PRO-TILL. **YOU** must ensure that you and anyone else who is going to operate, maintain or work around the PRO-TILL be familiar with the operating and maintenance procedures and related **SAFETY** information contained in this manual. This manual will take you step-by-step through your working day and alerts you to all good safety practices that should be adhered to while operating this equipment.

Remember, **YOU** are the key to safety. Good safety practices not only protect you but also the people around you. Make these practices a working part of your safety program. Be certain that **EVERYONE** operating this equipment is familiar with the recommended operating and maintenance procedures and follows all the safety precautions. Most accidents can be prevented. Do not risk injury or death by ignoring good safety practices.

- PRO-TILL owners must give operating instructions to operators or employees before allowing them to operate the PRO-TILL, and at least annually thereafter per OSHA regulation 1928.51.
- The most important safety device on this equipment is a SAFE operator. It is the operator's responsibility to read and understand ALL Safety and Operating instructions in the manual and to follow these. All accidents can be avoided.
- A person who has not read and understood all operating and safety instructions is not qualified to operate the machine. An untrained operator exposes himself and bystanders to possible serious injury or death.
- Do not modify the equipment in any way. Unauthorized modification may impair the function and/or safety and could affect the life of the equipment.
- Think SAFETY! Work SAFELY!

GENERAL SAFETY

1. Read and understand the Operator's Manual and all safety signs before operating, maintaining or adjusting.



2. Install and properly secure all shields and guards before operating. Use hitch pin with a mechanical locking device.
3. Have a first-aid kit available for use should the need arise and know how to use it.



4. Have a fire extinguisher available for use should the need arise and know how to use it.



5. Wear appropriate protective gear. This list includes but is not limited to:
   - A hard hat
   - Protective shoes with slip resistant soles
   - Protective glasses or goggles
   - Heavy gloves
   - Wet weather gear
   - Hearing protection
   - Respirator or filter mask

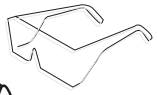



6. Clear the area of people, especially small children, and remove foreign objects from the machine before starting and operating.
7. Do not allow riders.
8. Stop tractor engine, set park brake, remove ignition key and wait for all moving parts to stop before servicing, adjusting, repairing or unplugging.
9. Review safety related items with all operators annually.

HOOK-UP / UNHOOKING

The PRO-TILL should always be parked on a level, dry area that is free of debris and foreign objects. Follow this procedure to hook-up:

1. Clear the area of bystanders and remove foreign objects from the machine and working area.
2. Make sure there is enough room to back the tractor up to the trailer hitch.
3. Start the tractor and slowly back it up to the hitch point.
4. Connect the hydraulic.

- Use a clean cloth or paper towel to clean the couplers on the ends of the hoses. Also clean the area around the couplers on the tractor. Remove the plastic plugs from the couplers and insert the male ends.
- Be sure to match the pressure and return line to one valve bank.
- Hoses have be labelled in a suggested order of priority from most used to least:
  (1) Depth (2) Wings 3) Transport (4) Jack

5. Use the hydraulic jack controls to raise or lower the hitch to align with the drawbar.

   ⚠ **IMPORTANT:** Close the ball valve to prevent accidental operation of this circuit. Ensure ball valve handle remains in closed position.

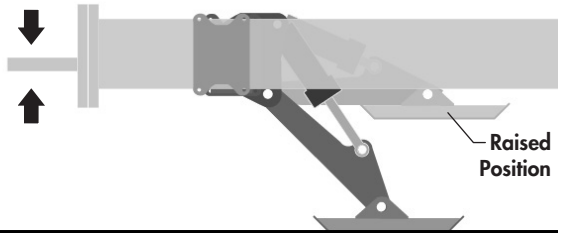

⚠ **WARNING:** *Tractor **MUST** be equipped with a clevis hitch to prevent unit from tipping upward while folding into and out of transport. A safety chain must also always be properly installed.*

6. Slowly back tractor up to align the hitch.
7. Install a drawbar pin with provisions for a mechanical retainer such as a KLIK pin. Install the retainer.
8. Install a safety chain between the tractor and the hitch.
9. Connect lights (electrical socket plug) to tractor.
10. Raise the hydraulic hitch jack.
11. When unhooking from the tractor, reverse the above procedure.

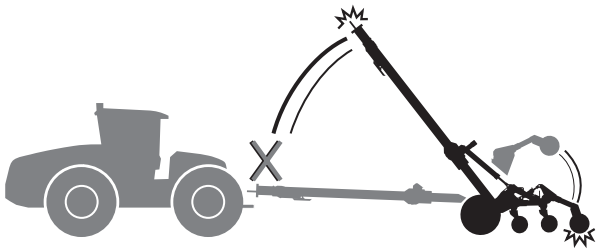

⚠ **WARNING/DANGER:**

Never *disconnect Pro-Till from tractor if rear sections of machine are partially raised.*

Negative Hitch Weight *may result, the hitch pole may suddenly raise, and the rear section would come crashing down. Only disconnect when unit is on level ground in the proper transport or field position.*





⚠ **WARNING/DANGER:**

*The tractor **MUST** be properly equipped with a clevis hitch and safety chain to prevent **Negative Hitch Weight** occurring when raising or lowering the rear sections.*

If the unit is not properly attached to the tractor with a clevis hitch and safety chain, the negative hitch weight could result in the hitch pole suddenly raising and the rear section to come crashing down.



Transport

TRANSPORT SAFETY

1. Read and understand ALL the information in the Operator's Manual regarding procedures and SAFETY when operating the PRO-TILL in the field/yard or on the road.
2. Check with local authorities regarding machine transport on public roads. Obey all applicable laws and regulations.
3. Always travel at a safe speed. Use caution when making corners or meeting traffic.
4. Make sure the SMV (Slow Moving Vehicle) sign, and all the lights and reflectors that are required by the local highway and transport authorities are in place, are clean and can be seen clearly by all overtaking and oncoming traffic. Be sure to check with local highway authorities and comply with their lighting and transport requirements.
5. Keep to the right and yield the right-of-way to allow faster traffic to pass. Drive on the road shoulder, if permitted by law.
6. Always use hazard warning flashers on tractor when transporting unless prohibited by law.
7. Always use a pin with provisions for a mechanical retainer and a safety chain when attaching to a tractor or towing vehicle.

TRANSPORTING

Use the following guidelines while transporting:

1. Use a safety chain and a pin with provisions for a mechanical retainer.
2. Ensure Pro-Till is in the full transport position with the wing rollers secure and properly in place.

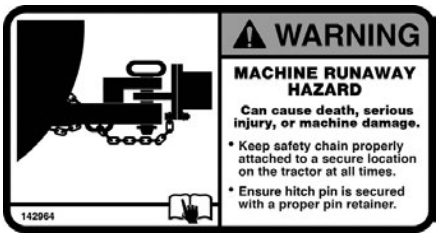

3. Ensure debris that may fall or become dislodged during transport is removed.
4. Be sure hazard lights are flashing and SMV decal is visible.
5. MAXIMUM RECOMMENDED TRANSPORT SPEED: **MAX 40 km/h** or **25 mph**. (Road Conditions, Field speeds may be lower.)

   Due to weight of the machine and tire ratings, do not exceed the recommended maximum speeds or severe tire damage / excessive wear may occur.
6. Check that the transport tires are properly inflated to **41 PSI** (283 kPa).

⚠ **IMPORTANT:** *Under NO CIRCUMSTANCES should there ever be riders while the Pro-Till is in transport.*



Transport to Field Position Overview

TRANSPORT TO FIELD POSITION

FOLLOW PROCEDURE BELOW:

A. On level ground, position the Pro-Till so it is straight in-line behind the tractor.

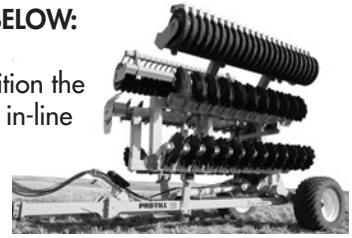

B. **Slightly** extend the Transport Cylinder (#3) just enough to remove the weight of wings off from the wing transport carriers (approximately 1"). Do not lift more than needed.

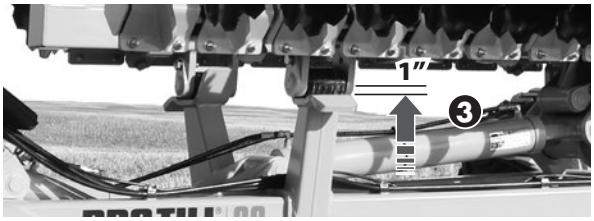

⚠ **IMPORTANT:** ***DO NOT*** *fully extend the transport cylinders at this point. Follow proper procedures to prevent possible equipment damage or failure.*

C. Extend the Wing Cylinders (#2) to fully open the wings behind the machine.

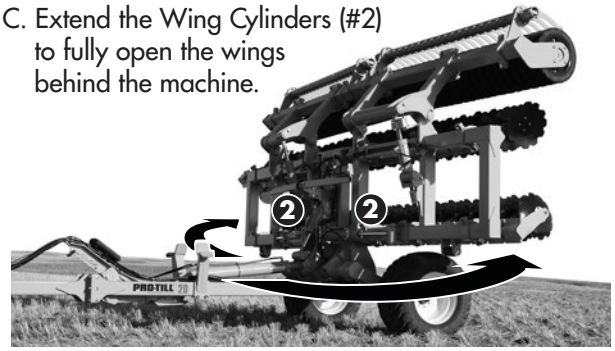

⚠ NEVER LIFT WINGS!

Unfold using the **Wing Cylinders (2)**, *then* lower all rear sections using the **Transport Cylinder (3)**.

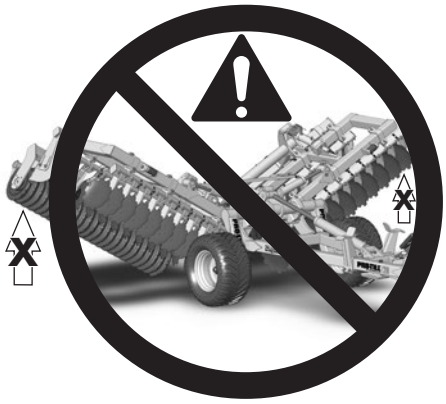

D. After fully opening the wings, extend the Transport Cylinder (#3) to completely lower the Pro-Till rear frame sections to the ground.

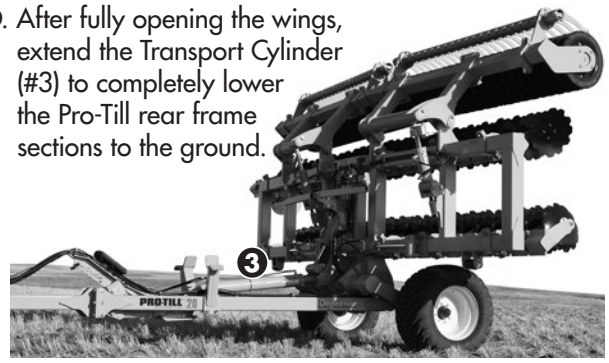

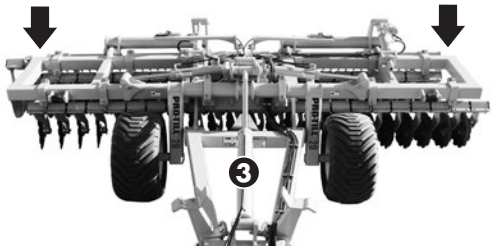

E. Place the Transport Cylinders (#3) into the FLOAT position before operation.

⚠ **IMPORTANT:** *The **Transport** Cylinders **MUST** be in the "**FLOAT**" position in order for the Pro-Till to properly contour the ground and to avoid possible cylinder or equipment damage.*





F. <u>Pro-Till 14/17/20 Standard Configuration Models</u>:

Wing Cylinders (#2) - During operation, place the Wing Cylinders into the FLOAT position before operation.

- OR -



F. <u>PT20 Models with Wing Pressure Kit</u>:

Wing Cylinders (#2): During operation, the wing circuit hydraulics need to be engaged **constantly** from the tractor, in the extended direction. This will ensure constant down pressure is applied to the wings and the machine can still contour over uneven terrain effectively. (*Refer to your tractor's manual for proper procedures.*)



Field to Transport Position Overview

FIELD TO TRANSPORT POSITION

FOLLOW PROCEDURE BELOW:



A. In field position, fully extend the Depth (#1) cylinders (Wheels & Rollers) to completely raise the **disc frames**.

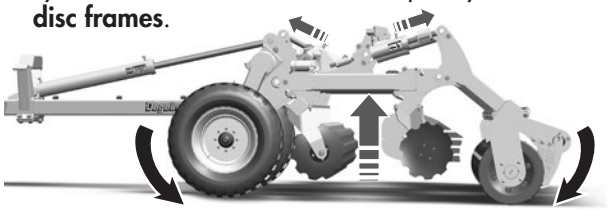

NOTE: *It is important to fully raise the disc frames up as high as possible as it puts the rollers and wheels in the correct position for low transport.*

⚠ **IMPORTANT:** ***DO NOT*** *retract the Wing cylinders to raise the wings at this point. Follow proper procedures to prevent possible equipment damage or failure.*

B. Retract the Transport Cylinder (#3), fully raising the complete rear section.

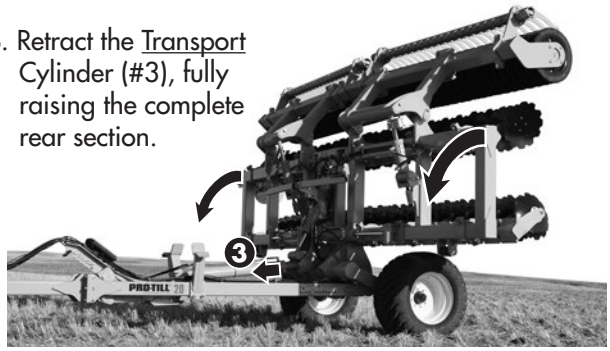

⚠ NEVER LIFT WINGS!

Lift rear sections using the **Transport Cylinder (3)**, *then* fold the wings forward using the **Wing Cylinders (2).**

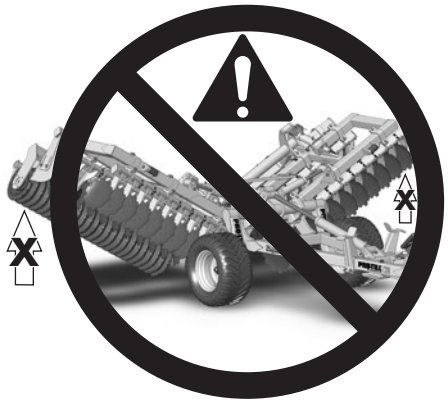

C. After raising all the rear sections, retract the Wing Cylinders (#2) to bring both wings inward towards the frame.



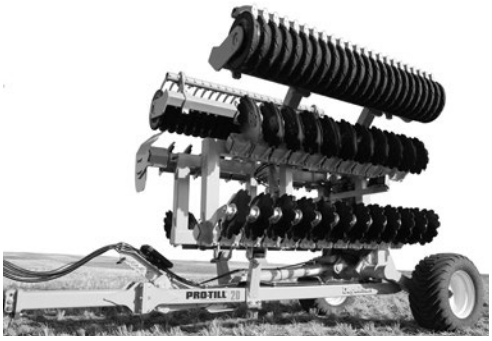

D. When the wings get close to the wing transport holders, you may need to *slightly* extend the Transport cylinder (#3) so the rollers can reach the correct position.

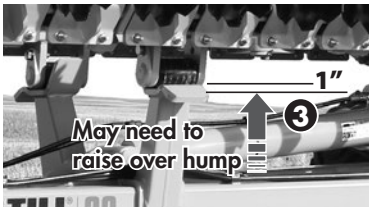



E. When the wing frame rollers are in proper position above the transport holders, lightly lower the wings in place by retracting the Transport Cylinder (#3) to gently set the wings onto the holders.

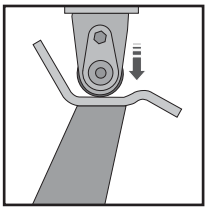

OPERATING SAFETY

1. Read and understand the Operator's Manual and all safety signs before using.
2. Stop tractor engine, set park brake, remove ignition key and wait for all moving parts to stop before servicing, adjusting, repairing or unplugging.
3. Keep hands, feet, hair and clothing away from all moving and/or rotating parts.



4. Do not allow riders on the PRO-TILL tractor during operation or transporting.
5. Keep all shields and guards in place when operating (if applicable).
6. Clear the area of all bystanders, especially children, before starting.
7. Do not operate machine on overly steep side hills or slopes.
8. Be careful when working around or maintaining a high-pressure hydraulic system.
   Ensure all components are tight and in good repair before starting.

BREAK-IN

Although there are no operational restrictions on the PRO-TILL when it is new, there are some checks that should be done when using the machine for the first time, follow this procedure:

⚠ **IMPORTANT:** *It is important to follow the Break-In procedures especially those listed in the "Before using" section below to avoid damage:*

A. Before using:

1. Read Safety Info. & Operator's Manual.
2. Complete steps in "Pre-Operation Checklist".
3. Lubricate any grease points.
4. Check all Bolt Tightness.
5. Adjust Disc Cutting Depth as outlined in the "Setting Disc Depth" section.

B. After operating for **2 hours**:

1. Check all hardware. Tighten as required.
2. Check all hydraulic system connections. Tighten if any are leaking.

PRE-OPERATION CHECKLIST

It is important for both personal safety and maintaining good operational condition of the machine that the pre-operational checklist be followed.

Before operating the machine and each time thereafter, the following areas should be checked off:

1. Lubricate the machine per the schedule outlined in the "Maintenance Section".
2. Use only a tractor with adequate power to pull the PRO-TILL under ordinary operating conditions.

   NOTE: *It is important to pin the drawbar in the central location only.*

3. Ensure that the machine is properly attached to the tractor using a clevis hitch, safety chain and a drawbar pin with provisions for a mechanical retainer. Make sure that a retainer such as a Klik pin is installed.



⚠ **WARNING:** ***Negative Hitch Weight*** *may occur when raising or lowering the rear sections. If the unit is not properly attached to the tractor with a clevis hitch and safety chain, the negative hitch weight could result in the hitch pole to suddenly raise and the rear sections to come crashing down.*





4. Before using, inflate tires to:

   Center/Transport Tires: **41 PSI (283 kPa)**

5. Check oil level in the tractor hydraulic reservoir. Top up as required.
6. Inspect all hydraulic lines, hoses, fittings and couplers for tightness. Tighten if there are leaks. Use a clean cloth to wipe any accumulated dirt from the couplers before connecting to the tractor's hydraulic system.
7. Inspect the condition/wear of the discs. If needed or desired, adjust the Disc Cutting Depth as outlined in the adjustments section. If excessive disc wear is evident, replacement may be required. Refer to maintenance section.

OPERATING GUIDELINES

1. Re-phase and cycle oil in the Depth Control Cylinders (#1) before use. This is especially important after long periods of storage.

2. Place the Transport Cylinders (#3) into the FLOAT position before operation.



⚠ **IMPORTANT:** *The Transport Cylinders* **MUST** *be in the* ***FLOAT*** *position for the PRO-TILL to contour properly and to avoid possible cylinder or equipment damage.*

⚠ **IMPORTANT:** The *operator* **must** *read and understand the tractor manual in order to place the required hydraulic circuits into* ***float position****.*



3. Wing Cylinders (#2): (*Dependant on Model, see below*)

Standard Configuration Models

During operation, place the Wing Cylinders into the ***FLOAT position*** before operation.



- OR -

Models with Wing Pressure Kit

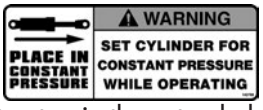

During operation, the wing circuit hydraulics need to be **engaged constantly** from the tractor, in the extended direction. This will ensure constant down pressure is applied to the wings and the machine can still contour over uneven terrain effectively.

⚠ **IMPORTANT:** *Operator* **must** *read and understand the tractor manual to place the required hydraulic circuits into* ***constant pressure position,*** *in the correct direction.*

4. **IDEAL OPERATING SPEED** is 10-12 mph.
   Minimum operating speed is 8 mph.
   Maximum operating speed is 14 mph.

5. When making headland turns, the operator may wish to slightly raise the disc sections by activating the Depth Cylinders (#1). Remember to lower after coming out of the turn.

6. Each time you start a new field you may need to adjust the cutting depth depending on the type of crop residue or soil conditions. The operator can adjust the cutting depth by following the guidelines in the "Setting Disc Depth" section.

7. After making adjustments to the cutting depth it is recommended to bring the Pro-Till up to speed (10-12mph) to test the depth setting by driving about 100m (cutting performance changes dramatically from a slow speed to high speed). Stop, check depth and cut of field, re-adjust the height higher or lower, if needed, based on your preference. Remember: Removing one depth stop lowers cutting depth 1/2" deeper, Adding one depth stop raises discs up 1/2" higher.

8. Check/adjust the deflector shield height setting.

9. Harder, packed soil may require additional passes for optimum results. It is recommended to do a second pass at an angle to the original pass.

FACTORY SETTINGS **PRO-TILL 14|17|20**

COMMON SETTINGS

Both Sides:
2-1/4"

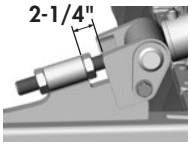

Initial Distance settings for Wing Cylinder Pitch Adjustment Lugs.

Front Hitch Setting
Hitch set to lowest position & install one bolt and nut from each side.

Safety Chain
Bolt and small washer installed in front.

Safety Chain, thick washer & lock nut behind front plate.

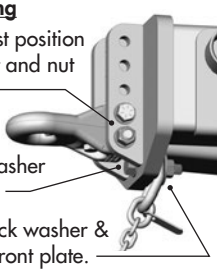

20" DISC SETUP

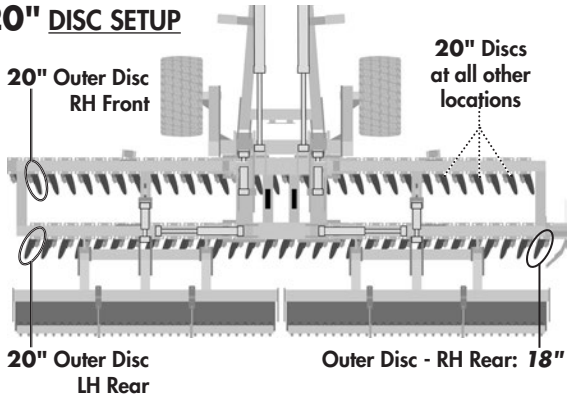

22" DISC SETUP

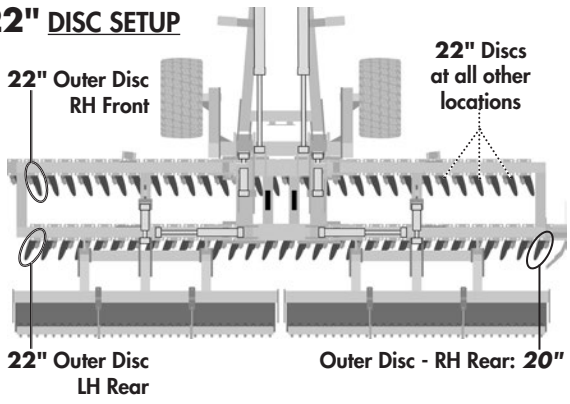

SETTING DISC DEPTH & DIRT DEFLECTOR

NOTE: *As the discs wear with usage, the disc depth settings will also need to be adjusted accordingly.*

Use the following as a guideline for setting depth:

1. Drive the PRO-TILL onto level ground. For initial setup, try **"8 Depth Stops"** on each cylinder stop.
2. Fully retract the Depth (#1) cylinders to lower rear frame to ground.
3. Check the penetration depth of the front and rear row of discs. Take note of how much you would like to raise or lower both the front and rear disc sections - round to the nearest 1/2".
4. Fully raise the frame back off the ground by extending the Depth (#1) cylinders.
5. Adjust Disc height at the two front wheel cylinder positions.

   Lower Discs - **Remove one Depth Stop** for each **1/2"**

   Raise Discs - **Add one Depth Stop** for each **1/2"**
6. Repeat above procedure until proper depth is achieved.
7. Adjust Dirt Deflector height as shown below.

DEPTH SETTING OVERVIEW

Adjusting the disc cutting depth is accomplished by adding or removing a number of spacers from depth adjustment cylinder.

The spacers limit the stroke distance of the cylinder, changing the amount that the disc frames are lowered.

Each spacer that is added to the cylinders raises the frame height by 1/2". Therefore, to lower discs deeper into the soil, you would remove *one* spacer for *each* 1/2" of depth change required.

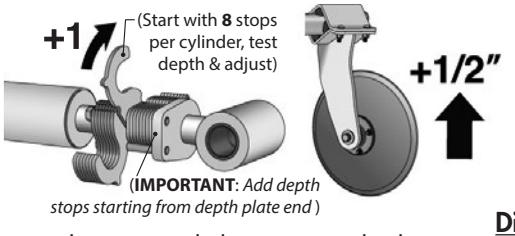

A typical recommended penetration depth of 2" is suggested. This depth, however, can be adjusted to the operators needs and preferences or based on different crop varieties and soil conditions.

PITCH ADJUSTMENT

Some operators may also prefer to adjust the front or rear frame disc sections to run slightly higher than the other. Adjustments to the front to rear disc section height or "pitch" are done with the threaded pitch adjustment rods:

- Shortening adjustment rod length:
  - Lowers the Rear Discs
  - Reduces Roller Pressure
- Lengthening adjustment rod length:
  - Raises the Rear Discs
  - Increases Roller Pressure

NOTE: For better performance, adjust pitch slightly down (lengthen rod length) to increase roller pressure.

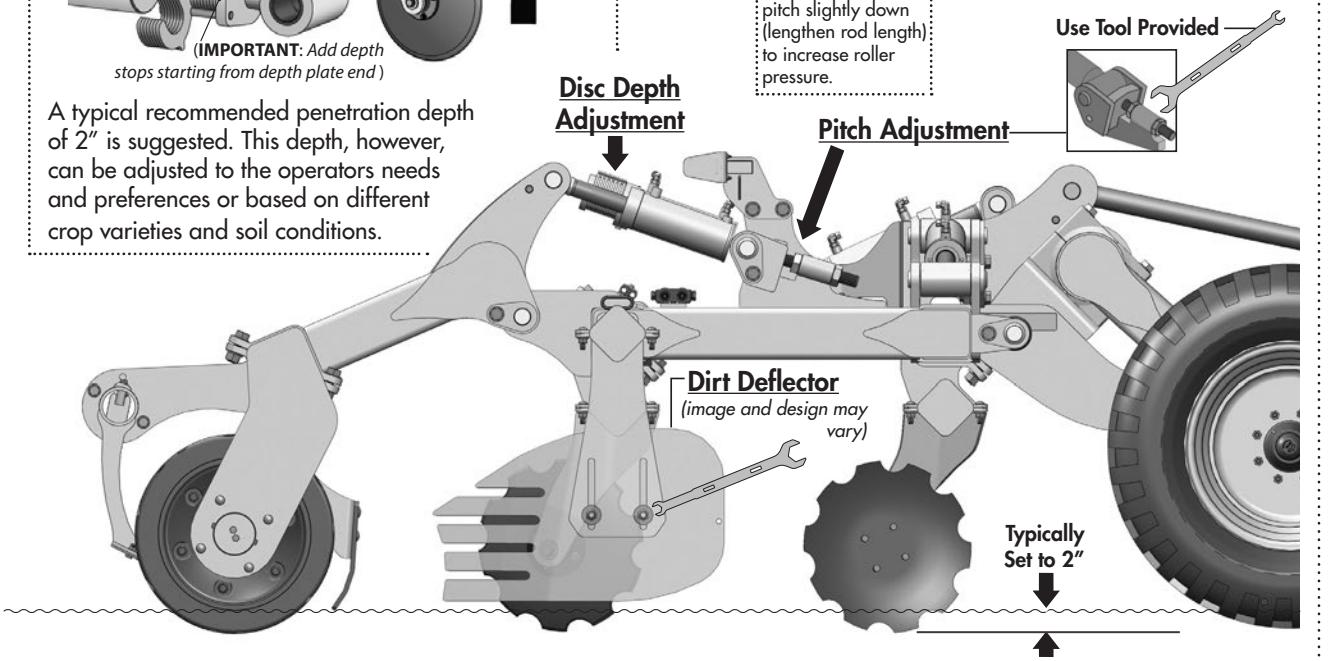

IMPORTANT: You may need to adjust the deflector height according to soil penetration. Best setting is when deflector runs just slightly above the ground.

RECOMMENDED PROCEDURE TO SET DEFLECTOR HEIGHT:
1 - Run the machine with discs set to the proper depth.
2 - Stop the machine.
3 - Adjust the height so the deflector is running just slightly above the ground.

Adjust "Dirt Deflector Angle" whenever the Pitch of the Frame is adjusted.
Note: If running *Nose up* or *Nose down,* adjust the deflector angle accordingly.

ADJUSTMENT TOOL

A tool is provided to help adjust the large 1-1/2" nuts on the *Pitch adjustment rods*. It can also adjust the 3/4" hardware on the *Dirt Deflector.* It is located and stored on the inside of the left wing frame.

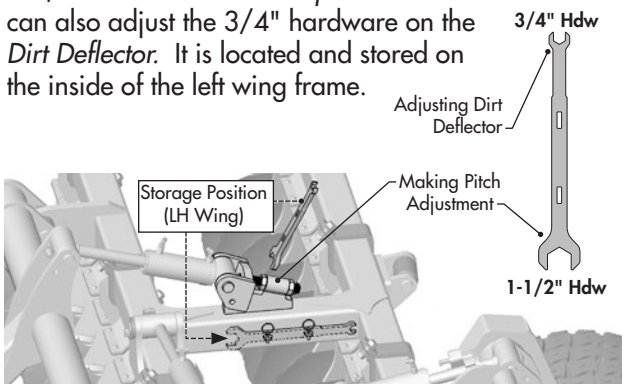

PROCEDURE TO SET DEFLECTOR HEIGHT:

⚠ **IMPORTANT:** *You may need to adjust the deflector height according to soil penetration. Best setting is when deflector runs just slightly above the ground.*

The following is a recommended procedure to set the height of the dirt deflector:

1. Run the machine with discs set to the proper depth.
2. Stop the machine.
3. Adjust the height so the deflector is running just slightly above the ground.

SETTING DEFLECTOR ARM DISTANCE (Previous)

The *Dirt Deflector Arm* has multiple extension settings. The position can be adjusted to the operator's preference depending on the disc/frame pitch settings and soil conditions.

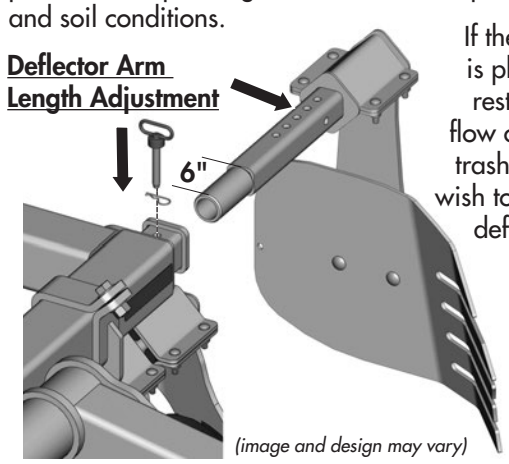

(image and design may vary)

If the deflector is plugging or restricting the flow of dirt and trash, you may wish to move the deflector arm outward.

6-WAY DIRT DEFLECTOR ADJUSTMENT

The main purpose of the Dirt Deflector is to fill the furrow caused by the right rear disc by capturing, & containing some of the dirt flow from the right front disc & redistributing it.

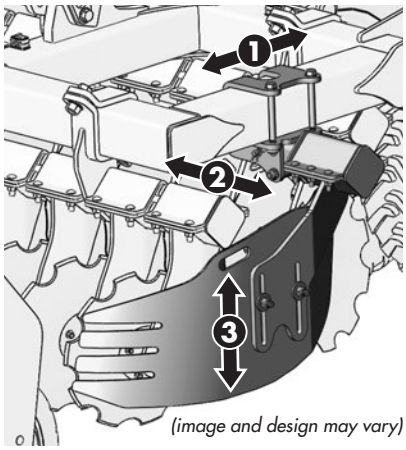

(image and design may vary)

The Dirt Deflector can be adjusted in six directions to enable optimum performance & operator preference.

❶ To maintain optimum dirt placement while operating at higher speeds, the entire Dirt Deflector assembly could be moved rearward. Inversely, for slower speeds, the entire Dirt Deflector assembly may need to be moved forward.

❷ The operator may wish to adjust the arm distance depending on the disc option, frame pitch settings and soil conditions. For example, if the deflector is plugging or restricting the flow of dirt and trash, you may wish to move the deflector arm outward.

❸ When cutting deep, the operator should move the deflector plate upward to avoid dragging high volumes of dirt & smearing the ground.

NOTE: *You may need to adjust the deflector height according to soil penetration. Best setting is when deflector runs just slightly above the ground.*

DISENGAGING THE DIRT DEFLECTOR

The quickest way to disengage the *Dirt Deflector* is to:

- Loosen the two deflector adjustment bolts
- Fully raise the deflector plate to the top of the adjustment slot.
- Then retighten the bolts.

Optional:

The Dirt Deflector Assembly may be removed & stored.

ROCK EJECTOR POSITION OVERVIEW - LSTXE

(Pro-Till 20NT Models above SN PTL 6909)

Sample of Mounted Rock Ejector Position

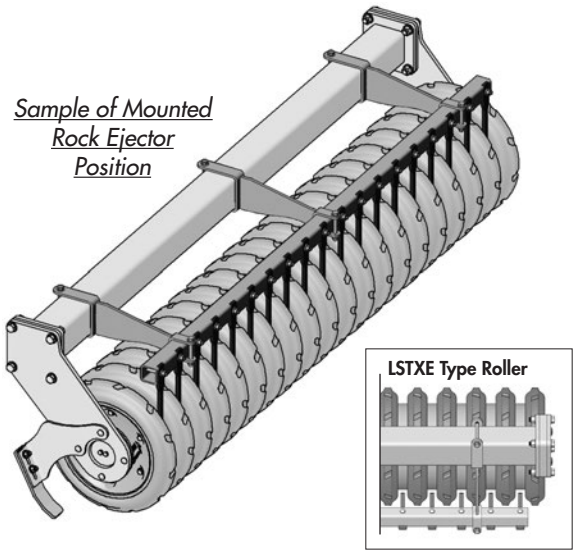

LSTXE - PT 20NT *Rock Ejector Mount Distances*

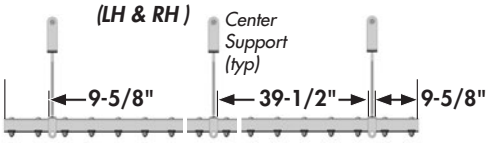

INDIVIDUAL EJECTOR ADJUSTMENT - LSTXE

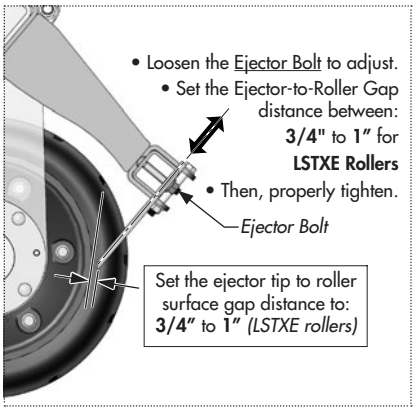



SCRAPER POSITION OVERVIEW

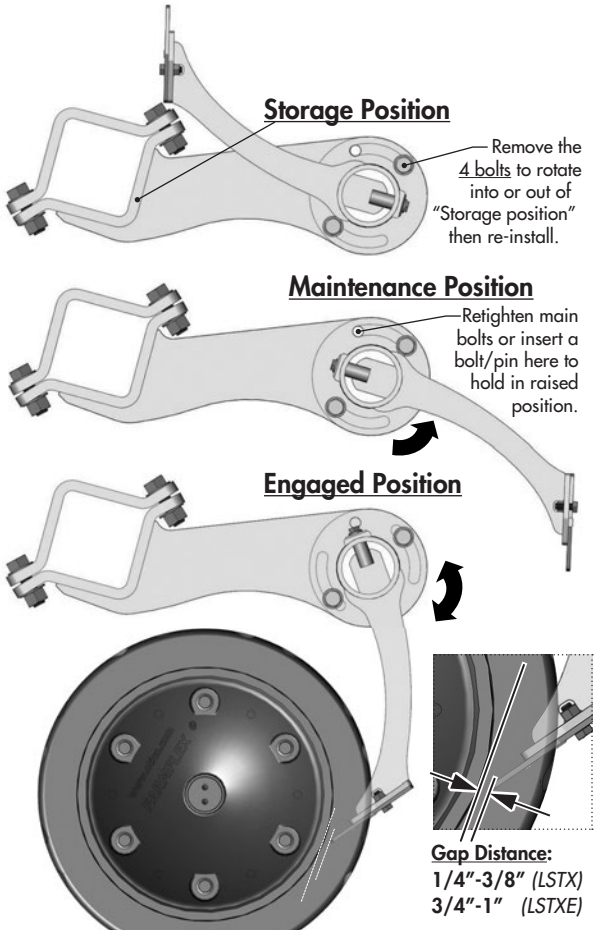

SCRAPER SIDE-TO-SIDE POSITIONING

Inspect that the scraper plates are as close to centered as possible in the roller groove & that no scrapers are touching the sides of the rubber roller. Ideally this gap should be ***1/4" for LSTX*** rollers *(as shown in diagram)* or ***1/2" for LSTXE*** rollers.

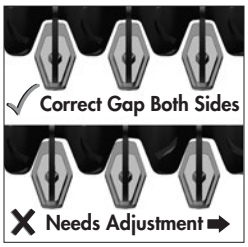

(LSTX Roller shown above)

If adjustment is needed, loosen the scraper arm clamps and adjust position until there is proper clearance on all edges. You may need to slightly adjust engagement distance if side-to-side is unsuccessful.



(Example of LSTXE Roller)

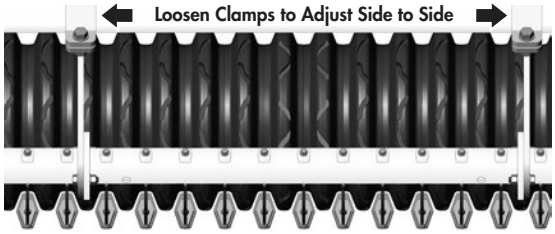

SETTING SCRAPER POSITION

Change into Storage Position:

- Loosen & remove the 4 bolts (2 per arm).
- Rotate section upward to new position.
- Reinstall bolts and tighten in place.
- Reverse procedure to put into working position.

Change into Maintenance Position (from engaged):

- Loosen the 4 bolts (2 per arm).
- Rotate section upward until top hole is open.
- Tighten bolts to secure and/or insert bolt or insert pin (user supplied) into top hole to secure in position.

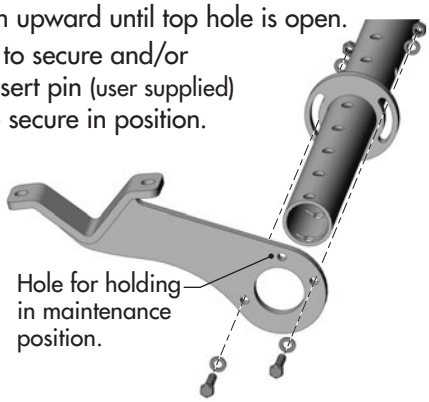

Change into Engaged Position (from maintenance):

- Loosen the 4 bolts (2 per arm).
- Rotate section down until scraper blades are set to proper distance from inner roller groove. *(Recommended distance: **1/4" to 3/8"** for **LSTX** rollers or **3/4" to 1"** for **LSTXE** rollers)*
- Tighten bolts to secure in position.

INDIVIDUAL SCRAPER ARM ADJUSTMENT

The individual scraper arm position can also be fine tuned by loosening the top mounting bolt, adjusting the position, and then "holding in place" while retightening the bolt.

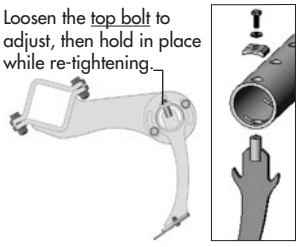

REVERSING SCRAPER BLADES

The scraper blades are designed to be reversible in order to provide extended wear. It is advised to reorder replacement blades soon after reversing to prevent possible downtime in the future.

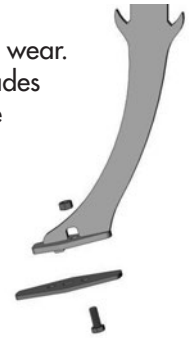



Double Sided Scraper Blades

Note: When blades are being reversed, the complete section must be changed at the same time or adjustment will not work properly.

TRACKING ADJUSTMENTS

Tracking is a common occurrence related to how the front & rear row disc angles respond to varying degrees of soil hardness. Firm, untilled soil sometimes causes the machine to slightly track to the left. In softer soils, or when completing a "second pass", the machine may tend to track to the right.

NOTE: *Sometimes tracking changes in operation on the same pass due to variable soil conditions.*

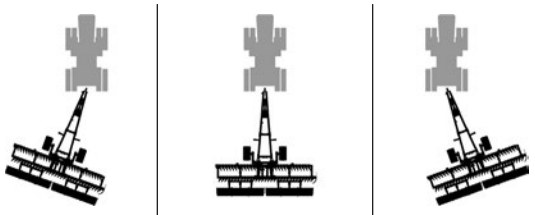

Tracking Left
Firm Soil

Straight

Tracking Right
Soft Soil

Mild tracking, one side or the other may not cause too much concern, but more pronounced offsets can lead to larger sub-soil ridges. This results from gaps in the disc coverage due to the skewed angle of offset discs.

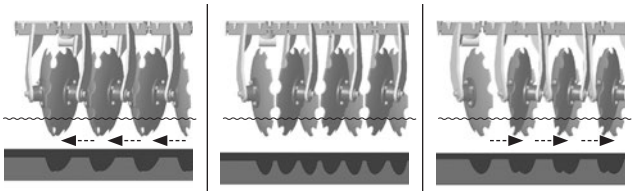

Left - Larger Ridges | Straight (uniform) | Right - Larger Ridges

Tracking Left Correction:

If you find the machine tracking to the left, you can adjust the pitch of the unit so the front disc does less work & the rear disc does more work. This is achieved by either raising the front row of discs or lowering the rear row using the independent wheel & roller depth stops.

Tracking Right Correction:

In soft soil or during a "second pass" the rear row might overpower the front row causing the Pro-Till to track to the right. To correct for this and achieve straight tracking, either the rear discs may need to be raised or the front discs lowered by adjusting the number of the depth stops.

ADJUSTING WING DOWN PRESSURE

***For PT20NT Models with Constant Wing Pressure Kit.**

The purpose of the wing pressure valve is to provide constant down pressure to the wings of the Pro-Till in order to reduce the likelihood of the "Resonance" or "Bounce" issue occurring. It also transfers some of the weight of the heavier center frame out towards the wings for a more even field finish and consistent tillage depth.

To Adjust:

Apply constant down pressure to the wing circuit using the tractor hydraulics. Verify that the pressure gauge reads around 700psi.



If the pressure reads higher or lower than 700psi (+/- 50psi) it may require adjustment.

****DO NOT EXCEED 900 PSI****

With the circuit still under pressure, loosen the lock nut (14mm) for the adjustment screw on the pressure reducing/relieving valve cartridge.



Using an allen key, adjust set screw clockwise to raise pressure or counter-clockwise to reduce it until the gauge reads the proper pressure setting.



Re-tighten lock nut.

Note: Future adjustment of this screw may be necessary for different field conditions and working depths.

Operation - Adjustments: Rephasing Cylinders

Overview & Principles of Rephasing

A **Rephasing Cylinder System** enables a pair (or multiple) cylinders to extend and retract in very near unison.

Rephasing is accomplished by using a rephasing passageway which is located at the position of full extension. Many design techniques accomplish this but in simplicity, the ***rephasing passageway*** allows a small amount of hydraulic fluid to bypass the cylinder piston in the fully extended position ultimately allowing the cylinders to rephase.

This feature allows the cylinders to be aligned during set up and ***rephased*** in the event of oil leakage/by-pass during usage or after service work.

A rephasing cylinder system will consist of a master cylinder and 1 or more slave cylinders. These cylinders operate evenly to raise and lower the implement to the desired working depth.

Bleeding Air & Rephasing Function

Rephasing cylinder lift systems should be ***rephased*** periodically to purge any air that may be ingested into the system over time and/or compensate for drift due to system leakage.

To rephase the system, with the cylinder fully extended, actuate the cylinder valve for 30 seconds, or 5-10 seconds if you rephase often.

In a new rephasing circuit, a much longer time of maintaining a fully extended sequence may be required to bleed excessive air out of the circuit and may have to be repeated several times.

⚠ **IMPORTANT:** *A rephasing cylinder circuit utilizes positive-displacement that effectively transfers power between cylinders, with the possibility of increasing internal pressures from cylinder to cylinder. Intensification occurs in hydraulic cylinders when there is pressure supplied to the full bore end of the hydraulic cylinder (extension) but the rod end (retraction) port becomes blocked or under excessive load. Pressure intensification may cause pressures to exceed the working pressure ratings of the cylinders themselves, or other components within the system. Safety awareness and caution should be taken to identify signs or causes of potential pressure build-up in the circuit.*

Troubleshooting

Series rephasing cylinder systems *(Master and Slave(s))* can exhibit undesirable behaviors such as ***creep*** *(drift or movement when the hydraulic cylinder is not in use)* or ***failing to stay synchronized*** *(not extending and retracting at the same rate).*

Below is a brief overview of some of the possible conditions that contribute to cylinder creep, drift or the series cylinder getting out of sync. Keep in mind that the cylinders are only part of the hydraulic circuit and there can be other contributing causes.

Cylinder rod measurement method:

Cylinder by-pass is a common field issue in series cylinder systems, and a systematic review is required to determine the problem.

- Extend the cylinders fully to the re-phasing position, then retract approximately 2+ inches away from the rephasing position.
- Immediately disconnect the hydraulics from tractor.
- Measure the length of the extended cylinder rod on each cylinder.
- Leave implement to stand for some an extended period of time, i.e. 3 hours.
- Re-measure length of rods again and compare before and after measurements.

  Please note: Variation can be expected if the implement is left over a time where the temperature change affects the hydraulics by contraction or expansion. Warm to cooler temperatures will cause the series cylinders to move. Make sure measurements are taken at similar temperatures.
- When the 'suspect' cylinder has been identified, disassembly must be carried out in a clean environment. The scoring of barrels and piston seals will usually indicate contamination of some type has entered the system.

Air in the system:

If one or all of the cylinders drift or the system is 'spongy' air is likely entrained in the system. Check for air bubbles going back to the tank or by removing the return line and catching oil in a clean container. With the rod clevises disconnected and the cylinders horizontal (ports at 12 o'clock) or vertical, hold in the re-phasing position until no aerated oil flows.

Please note: Check the reservoir levels when carrying out this exercise. Once the air has been pushed out of the system the reservoir can become low. This can introduce air into the system again.

Troubleshooting - Pro-Till 14/17/20

Plugging disc rows in wet conditions:

- Ensure roller is turning & scrapers are set properly.
- Raise machine working depth.*
- Increase operating speed slightly.
- Adjust pitch so front discs are slightly higher by retracting threaded pitch adjustment.
- Fully extend depth control cylinders & hold for 30 seconds to re-phase.
- Check condition & operation of disc hubs (make sure they turn freely).
- Wait for soil conditions to dry out more.

Roller skidding in wet conditions:

- Check scraper operation & settings.
- Raise machine working depth.*
- Adjust pitch so front discs are slightly lower by extending threaded pitch adjustment & add depth stops to raise machine working depth.
- Momentarily take out of float & extend transport cylinders to simulate a rigid hitch ***(flat ground only)***. **Re-engage float** as soon as possible to avoid possible equipment damage.
- Wait for soil conditions to dry out more.
- Check condition & operation of bearings on both ends of the rollers.

Mud not clearing from rubber rollers:

- Check scraper to roller distance & adjust if necessary (scraper should be 1/4" to 3/8″ from **LSTX** rollers - or 3/4" to 1" for **LSTXE** models).
- Check scraper plate wear & adjust or replace as necessary (replace all scrapers per row at the same time).
- Check scraper row adjustment for slippage & re-torque or replace hardware if necessary.

Roller plugged in wet conditions:

- Retract transport cylinders to pass over pushed up mound & smooth out when soil dries.
- Raise discs all the way up & drive 12-14 mph on firm soil to clear rollers.
- In certain wet soil conditions place scrapers in storage position to continue operating.
- If plugging persists wait for soil conditions to dry out even more.

Rear discs or roller not engaging in very hard soil:

- Adjust pitch so front discs are higher by retracting threaded pitch adjustment. (It may be necessary to lower overall machine depth also*).
- Extend gauge wheel ratchet jacks as necessary to reduce weight on outer front wing corners.
- Momentarily take out of float & extend transport cylinders to simulate a rigid hitch ***(flat ground only)***. **Re-engage float** as soon as possible to avoid possible equipment damage.

Restriction or blocking on right side:

- Raise the deflector plate.
- Move deflector assembly outward.
- Raise machine working depth.*
- Reduce operating speed slightly.
- Check condition & operation of disc hubs (make sure they turn freely).
- Wait for soil conditions to dry out more.

Leaving a ridge or a groove between rollers:

- Adjust ridge wiper down slightly to remove ridge.
- Adjust ridge wiper up slightly to eliminate groove.



Leaving a ridge between passes:

- Adjust deflector up to reduce ridge.
- Adjust deflector assembly out to reduce ridge.
- Check that end disc size configuration matches factory suggested setup.
- Reduce implement width on guidance system for slightly more overlap.

Tractor oil temperatures are too high:

(PT20 models with Wing Pressure Kit only)

- Lower the flow on the wing circuit hydraulic remote. (Please refer to the Tractor's Operators Manual)

* *Gauge wheel usually needs adjustment when changing working depth by more than one depth control plate. (Pro-Till 20 Model Only)*

Troubleshooting - Pro-Till 14/17/20

Leaving a ridge or a groove between passes:

- Adjust deflector down to fill groove.
- Adjust deflector assembly in to fill groove.
- Set right rear adjustable disc higher.
- Check that end disc size configuration matches factory suggested setup.
- Reduce implement width on guidance system for slightly more overlap.

Subsoil leaving a groove every 10":

- Adjust pitch to level machine (disc rows are not set to the same depth).
- Adjust pitch to lower rear disc row by retracting threaded pitch adjustment (front is prone to running deeper with floating hitch & firm soil conditions).
- Rear discs following in front disc groove (see troubleshooting for this below).

Rear discs following in front disc cut or discs not doing a full cut:

- Adjust tracking by extending threaded pitch adjustment to track left or retract threaded pitch adjustment to track right.
- Adjust entire front row in small increments either left or right to achieve full cut.
- Check disc wear & adjust gang spacing or replace discs as necessary (as discs wear move front row right).
- Check factory settings on disc row locations to verify gang clamp hardware is tight & clamps have not slipped.
- Adjust GPS to actual cutting width *(see chart)* minus 6" overlap <u>per side</u> depending on working depth.
  Note: Also consider adjusting the GPS settings to include a 6" implement offset to the right.

(with 20" discs)	<u>2" Depth</u>	<u>MAX Depth</u>
Pro-Till 14	150" (3.8m)	154" (3.9m)
Pro-Till 17	190" (4.8m)	193" (4.9m)
Pro-Till 20	230" (5.8m)	233" (5.9m)

- Adjust working angle to approximately 20 degrees to the right from previously worked or seeded rows. *(Recommended practice)*



(Pro-Till 20 Model Only)

* *Gauge wheel usually needs adjustment when changing working depth by more than one depth control plate.*

End of wing discs cutting deeper or shallower than center:

- Fully extend depth control cylinders & hold for 30 seconds to re-phase.
- Extend gauge wheel ratchet jack slightly to reduce weight at end of wing if cutting deeper.
- Retract gauge wheel ratchet jack slightly to increase weight at end of wing if cutting shallower.
- Check for same number of depth control plates used on each side.
- *Models with Wing Pressure Kit:* Adjust the wing down pressure valve using an allen wrench in small increments of 50-100 psi until the desired result is achieved. **IMPORTANT:** *Do not exceed 900 psi or mechanical damage will occur.*

Tracking to the left:



- Adjust pitch so front discs are higher by retracting threaded pitch adjustment.
- Reduce implement width on guidance system for slightly more overlap.
- Adjust implement offset on guidance system to the right.

Tracking to the right:



- Adjust pitch so rear discs are higher by extending threaded pitch adjustment.
- Reduce implement width on guidance system for slightly more overlap.
- Adjust implement offset on guidance system to the left.

Hopping or leaving waves:

- Change operating speed (best performance is achieved over 10mph).
- Change field working angle (best finishing at 5 to 20 degrees off previously worked).
- Adjust working depth (deeper & run slower or shallower to run faster*).
- Pre-work heavy trash or wet areas at a slower speed & at a different angle than final pass.
- Wait for soil conditions to dry out more.
- Pro-Till 20 Models: Install optional gauge wheels (*if not already equipped*) & ensure proper adjustment as shown in the manual.
- *Models with Wing Pressure Kit:* Ensure the wing circuit hydraulic remote is constantly engaged in the extended direction.

MAINTENANCE SAFETY

1. Review the Operator's Manual and all safety items before working with, maintaining or operating the PRO-TILL.
2. Stop the tractor engine, set park brake, remove ignition key and wait for all moving parts to stop before servicing, adjusting, repairing or unplugging.
3. Keep hands, feet, clothing and hair away from all moving and/or rotating parts.
4. Clear the area of bystanders, especially children, when carrying out any maintenance and repairs or making any adjustments.



5. Place safety stands or large blocks under the frame before removing tires or working beneath the machine.
6. Be careful when working around or maintaining a high-pressure hydraulic system. Wear proper eye and hand protection when searching for a high pressure hydraulic leak. Use a piece of wood or cardboard as a backstop when searching for a pin hole leak in a hose or a fitting.
7. Always relieve pressure before disconnecting or working on hydraulic system.
8. Never disconnect Pro-Till from tractor if rear sections of machine are partially raised. See warning below:





⚠ **WARNING/DANGER:** ***Never*** *disconnect Pro-Till from tractor if rear sections of machine are partially raised.* ***Negative Hitch Weight*** *may result, the hitch pole may suddenly raise and the rear section would come crashing down. Only disconnect when unit is on level ground in the proper transport or field position.*

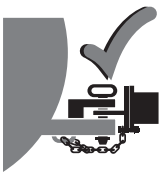

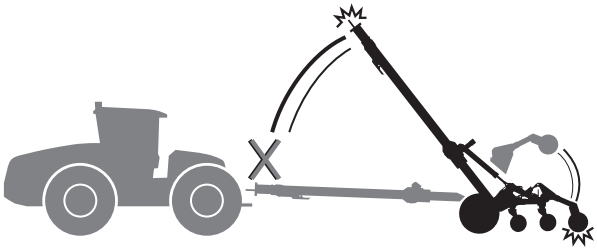

MAINTENANCE CHECKLIST

After reviewing the Maintenance and Hydraulic Safety Information, use the Maintenance Checklist provided for regular service intervals and keep a record of all scheduled maintenance:

(Initial break-in review. Read full section on pg.8)

A. Before using:

1. Read Safety Info. & Operator's Manual.
2. Complete "Pre-Operation Checklist"
3. Check all Bolt Tightness.
4. Adjust Disc Cutting Depth as outlined in the "Setting Disc Depth" section.

B. After operating for **2 hours**:

1. Check all hardware. Tighten as required.
2. Check all hydraulic system connections. Tighten if any are leaking.

Maintenance Check - 10 Hours

- Check for worn or damaged parts
- Hydraulic fluid leaks
- Damaged hoses
- Check tire pressure:
  41 PSI (283 kPa)

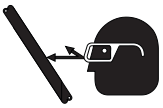



Maintenance Check - 50 Hours

- Grease hubs & spindles
- Check working points & pins
- Parking Jack *(4 pins*)*
  *Refer to parts section for locations
- Safety signs clean



Annually

- Bolt tightness
- Wheel bearings



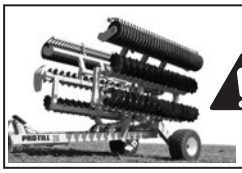

IMPORTANT: ⚠ *Safely secure Pro-Till in winged forward transport position when changing or servicing discs.*

SERVICE

GREASING

Grease: Use an SAE multipurpose grease with extreme pressure (EP) performance. Also acceptable is an SAE multipurpose lithium.

1. Use only a hand-held grease gun for all greasing.
2. Wipe grease fitting with a clean cloth before greasing, to avoid injecting dirt.
3. Replace and repair broken fittings immediately.
4. If fittings will not take grease, remove and clean thoroughly. Also clean lubricant passageway. Replace fitting if necessary.
5. Inject grease until you see grease being expelled from the bearing or bushing areas.

STORAGE

The PRO-TILL should be carefully prepared for storage to ensure that all dirt, mud, debris and moisture has been removed.

Follow this procedure when preparing to store:

1. Wash the entire machine thoroughly using a water hose or pressure washer to remove all dirt, mud, debris or residue.
2. Inspect all parts to see if anything has become entangled in them. Remove entangled material.
3. Lubricate hub and spindle grease fittings to remove moisture
4. Inspect all hydraulic hoses, fittings, lines and couplers. Tighten any loose fittings. Replace any hose that is badly cut, nicked or abraded or is separating from the crimped end of the fitting.
5. Touch up all paint nicks and scratches to prevent rusting.
6. Select an area that is dry, level and free of debris.
7. Store in either Transport or Field position.
8. Use hydraulic cylinder jack.
9. Oil any exposed chrome shafts on the hydraulic cylinders to prevent rusting.

REPLACING A PRESSED BUSHING

NOTE: *You may need the following tools: Press, hammer, punch, pry-bar, "Step-Tool"*

Use the following as a guideline for repair:

1. Ensure the area and frame are properly secured, supported, and safe to work on. Safely remove the pin(s), cylinder, and/or components necessary in order to access and work on the damaged bushing.
2. Remove the existing bushing using required tools. In some instances, you may need to cut the damaged bushing in order for easier removal (use proper safety precautions and try not to damage other components if using this method).
3. With the bushing removed, clean and prepare the location for the new bushing insert. **Note:** A mixture of "*Dish Soap and Water*" is recommended to use as a lubricant on the outside of the composite bushing.

> ⚠ **IMPORTANT:** DO NOT use *oil or grease* on outside or inside of composite bushings.

4. Use a stepped tool to ensure the edge of the bushing is not damaged when inserting.

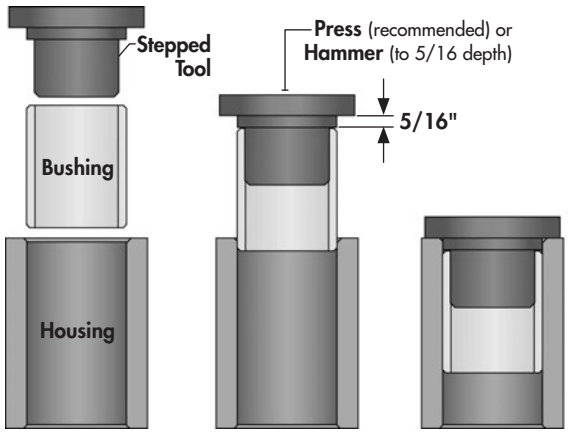

5. Ensuring the bushing is properly aligned, press into hole (preferred method) or hammer into position by striking the stepped tool.
6. Continue to install until the bushing edge is recessed in to a distance of 5/16" to allow for the outer seal to be properly installed. Do not exceed this depth.
7. Repeat steps 4-6 for opposite bushing (*if applicable*).
8. When both bushings are installed to the proper depth, install the new seals.
9. Re-assemble all other necessary components.

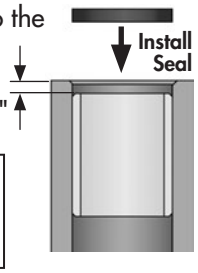

> ⚠ **IMPORTANT:** DO NOT use *oil or grease* on pins or bushing surfaces when re-installing.

HARDWARE SPECIFICATIONS

Note: Unless stated otherwise, hardware is typically:
Hex, Plated GR5 UNC or P8.8 (metric)

TORQUE SPECIFICATIONS

TORQUE

Checking Bolt Torque

The tables below give correct torque values for various bolts and capscrews. Tighten all bolts to the torques specified in chart unless otherwise noted. Check the tightness of bolts periodically, using these bolt torque charts as a guide. Replace hardware with the same strength (Grade/Class) bolt.

IMPERIAL TORQUE SPECIFICATIONS

(Coarse Thread - based on "Zinc Plated" values)



Size	Grade 5	Grade 8
	lb.ft (*N.m*)	lb.ft (*N.m*)
1/4"	**7 (*10*)**	**10 (*14*)**
5/16"	15 (*20*)	20 (*28*)
3/8"	**25 (*35*)**	**35 (*50*)**
7/16"	40 (*55*)	60 (*80*)
1/2"	**65 (*90*)**	**90 (*120*)**
9/16"	90 (*125*)	130 (*175*)
5/8"	**130 (*175*)**	**180 (*245*)**
3/4"	230 (*310*)	320 (*435*)
7/8"	**365 (*495*)**	**515 (*700*)**
1"	550 (*745*)	770 (*1050*)
1-1/8"	**675 (*915*)**	**1095 (*1485*)**
1-1/4"	950 (*1290*)	1545 (*2095*)
1-3/8"	**1250 (*1695*)**	**2025 (*2745*)**
1-1/2"	1650 (*2245*)	2690 (*3645*)

METRIC TORQUE SPECIFICATIONS

(Coarse Thread - based on "Zinc Plated" values)



Size	Class 8.8	Class 10.9
	lb.ft (*N.m*)	lb.ft (*N.m*)
M6	**7 (*10*)**	**10 (*14*)**
M8	16 (*22*)	23 (*31*)
M10	**30 (*42*)**	**45 (*60*)**
M12	55 (*75*)	80 (*108*)
M14	**90 (*120*)**	**125 (*170*)**
M16	135 (*185*)	195 (*265*)
M18	**190 (*255*)**	**270 (*365*)**
M20	265 (*360*)	380 (*515*)
M22	**365 (*495*)**	**520 (*705*)**
M24	460 (*625*)	660 (*895*)
M27	**675 (*915*)**	**970 (*1315*)**
M30	915 (*1240*)	1310 (*1780*)
M33	**1250 (*1695*)**	**1785 (*2420*)**
M36	1600 (*2175*)	2290 (*3110*)

HYDRAULIC SAFETY

- Make sure that all components in the hydraulic system are kept in good condition and are clean.
- Replace any worn, cut, abraded, flattened or crimped hoses and metal lines.
- Do not attempt any makeshift repairs to the hydraulic lines, fittings or hoses by using tape, clamps or cements. The hydraulic system operates under extremely high-pressure. Such repairs will fail suddenly and create a hazardous and unsafe condition.
- Wear proper hand and eye protection when searching for a high-pressure hydraulic leak. Use a piece of wood or cardboard as a backstop instead of hands to isolate and identify a leak.

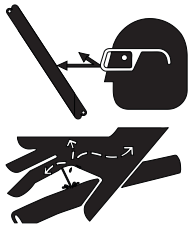

- If injured by a concentrated high-pressure stream of hydraulic fluid, seek medical attention immediately. Serious infection or toxic reaction can develop from hydraulic fluid piercing the skin surface.
- Before applying pressure to the system, make sure all components are tight and that lines, hoses and couplings are not damaged.

HYDRAULIC HOSE SPECIFICATIONS

Note: Unless otherwise stated, Hydraulic Hoses are either 3/8 or 1/2 with ORF female swivel ends.

HYDRAULIC HOSE INSTALLATION TIPS

The following tips are to help you identify some possible problem areas in the installation of hydraulic hoses.

1. Installation should be completed in a clean environment clear of dust and contaminants. Hoses and fittings should be capped if not installed.
2. Ensure hoses are not twisted during installation as this may weaken the hose. Also, the pressure in a twisted hose may loosen fittings or connections.
3. Allow sufficient bend radius in hoses when installing to prevent lines from collapsing and flow becoming restricted.
4. When installing hoses in an area of movement or flexing, allow enough free length for motion and to ensure fitting connections are not stressed.
5. Ensure hoses are properly clamped and secured in position after routing is complete to provide a cleaner installation and prevent possible damage or hazards.

HYDRAULIC FITTING INSTALLATION

The following info is to help you identify and properly install some of our standard hydraulic fittings.

SAE (JIC) 37° Flare

JIC fittings - Metal-to-metal sealing type fittings featuring a 37° flare (angle of sealing surface) and straight UNF (Unified National Fine) Threads.

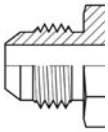

(Lubricated Values) Dash	Thread Size	Torque - lb.ft (*N.m*)	
-4	7/16 - 20	9-12	(12-16)
-6	9/16 - 18	14-20	(*19-27*)
-8	3/4 - 16	27-39	(*37-53*)
-10	7/8 - 14	36-63	(*50-85*)
-12	1-1/16 - 12	65-88	(*90-119*)

Tightening JIC 37° Flare Type Fittings

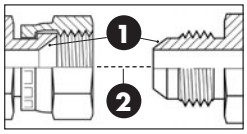

1. Check flare and flare seat for defects that might cause leakage.
2. Align fittings before tightening. Lubricate connections & hand tighten swivel nut until snug.
3. Using two wrenches, torque to values shown in table.

Alternate Installation Method

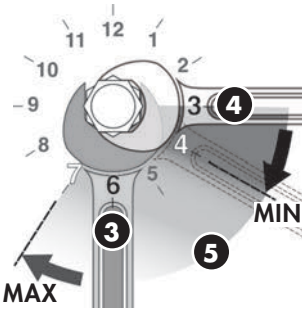

3. Using two wrenches. Place one wrench on the fixed connector body at a clock position of **6** o'clock.
4. Place the second wrench on the second connection as close to the **3** o'clock position as possible.
5. Tighten by rotating the second connection firmly to at least the **4** o'clock position, but no more than the **7** o'clock position. Typically, the larger the fitting size the less rotation required.

ORFS (O-Ring Face Seal)

ORFS fittings use an O-ring compression method to seal. This method offers a high level of sealing along with good vibration resistance. Male fittings include an O-ring located in a groove on the flat face. Female fittings feature a flat face and UNF straight threaded swivel nut.

The **Torque** method is recommended for ORFS installation.

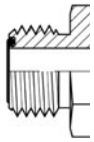

Dash	Thread Size	Torque - lb.ft (*N.m*)	
-4	9/16 - 18	18	(*25*)
-6	11/16 - 16	30	(*40*)
-8	13/16 - 16	40	(*55*)
-10	1 - 14	60	(*80*)
-12	1-3/16 - 12	85	(*115*)

Tightening ORFS (O-Ring Face Seal) Fittings

1. Inspect components and ensure the O-Ring seal is undamaged and properly installed in the groove of the face seal. Replacing the O-Ring may be necessary.
2. Align, thread into place and hand tighten.
3. Tighten to proper torque from the table shown above.

Note: A **DASH** size refers to a diameter of a hose (*inside*) or of a tube (*outside*) measured in 1/16″ increments.
For example, a ***Hose*** specified as *dash* **8** or **-8** would have an **inside** diameter of **8***/16″* or **1/2″**.
Alternatively, a ***Tube*** specified as *dash* **8** or **-8** would have an ***outside*** diameter of **8***/16″* or **1/2″**.

ORB (O-Ring Boss)

Male ORB fittings have straight UNF threads, a sealing face and an O-ring. The female fittings are generally found in the ports of machines and feature straight threads, a machined surface, and a chamfer to accept the O-ring. Sealing is achieved through the compression of the male O-ring against the chamfered sealing face of the female fitting.

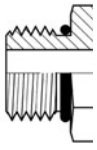

(Lubricated Values) Dash	Thread Size	Torque Non-Adjustable lb.ft (*N.m*)	Torque Adjustable lb.ft (*N.m*)
-4	7/16 - 20	30 (*40*)	15 (*20*)
-6	9/16 - 18	35 (*46*)	35 (*46*)
-8	3/4 - 16	60 (*80*)	60 (*80*)
-10	7/8 - 14	100 (*135*)	100 (*135*)
-12	1-1/16 - 12	135 (*185*)	135 (*185*)

Tightening ORB (O-Ring Boss) Fittings

Non-adjustable Port End Assembly

1. Inspect the components to ensure that male and female threads and sealing surfaces are free of nicks, burrs, scratches, or any foreign material.
2. Ensure O-Ring seal is properly installed and undamaged.
3. Lubricate threads and O-ring to help the O-ring slide past the port entrance corner and avoid damaging it.
4. Screw the fitting into position tighten to proper torque value from the table shown above.

Adjustable Port End Assembly

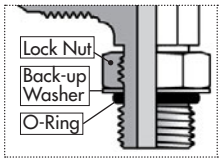

1. Inspect the components to ensure male & female threads and sealing surfaces are free of nicks, burrs, scratches, or any foreign material.
2. Ensure O-Ring seal is properly installed and undamaged.
3. Lubricate threads and O-ring to help the O-ring slide smoothly into the port and avoid damage.
4. Loosen back the lock nut as far as possible. Make sure back-up washer is not loose and is pushed up as far as possible.
5. Screw the fitting into port until the back-up washer or the retaining ring contacts face of the port. Light wrenching may be necessary. Over tightening may damage washer.
6. To align the end of the fitting to accept incoming tube or hose assembly, unscrew the fitting by the required amount, but not more than one full turn.
7. Using two wrenches, hold the fitting in desired position and tighten the locknut to the proper torque value from the table located above.
8. Inspect to ensure that O-ring is not pinched and that washer is seated flat on the face of the port.

WHEEL HUB REPAIR

IMPORTANT: *Be sure to block up unit securely before removing tires.*

DISASSEMBLY

1. Remove dust cap.
2. Remove cotter pin from nut.
3. Remove nut and washer.
4. Pull hub off spindle.
5. Dislodge the inner cone bearing and dust seal.
6. Inspect cups that are press fitted into hub for pits or corrosion and remove if necessary.
7. Inspect and replace defective parts with new ones.

ASSEMBLY

1. If cups need replacing, be careful to install them gently and evenly into hub until they are fully seated.
2. Apply a thick wall of grease inside hub. Pack grease in cones.
3. Install inner cone and dust seal as illustrated.
4. Position hub onto spindle and fill surrounding cavity with grease.
5. Assemble outer cone, washer and nut.
6. Tighten nut while rotating hub until there is a slight drag.
7. Turn nut back approximately 1/2 turn to align cotter pin hole with notches on nut.
8. Install cotter pin and bend legs sideways over nut.
9. Fill dust cap half full of grease and gently tap into position.
10. Pump grease into hub through grease fitting until lubricant can be seen from dust seal.

COMMON HUB & SPINDLE COMPONENTS

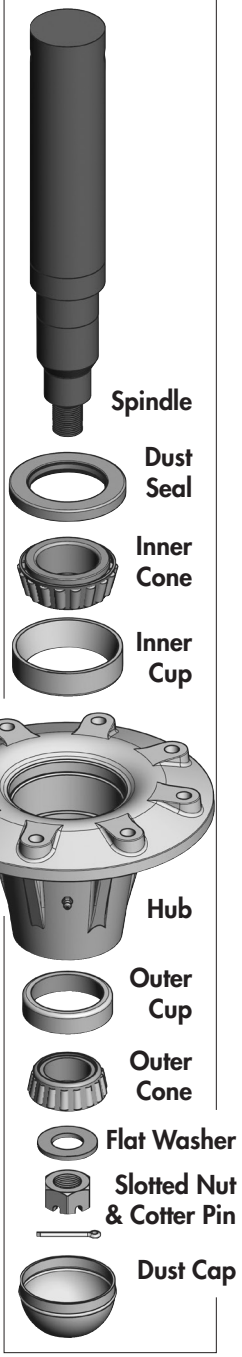

WHEEL NUT & WHEEL BOLT TORQUE

TORQUE

BOLT PATTERNS

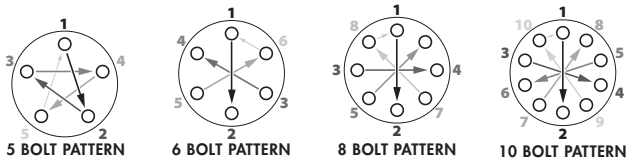

Wheel Nut/Bolt Torque	
Size	lb.ft (N.m)
9/16	120-130 (165-175)
5/8	185-190 (250-260)
3/4	280-300 (380-405)

Wheel Tightening Procedure

1. Install and **hand tighten** nuts/bolts.
2. Tighten to approx. **20% Torque** value using the Bolt **Star or CrissCross** patterns shown above.
3. Tighten to **Full Torque** value using the **Star or CrissCross** pattern.
4. If applicable, install **Rear Locknuts** using **Wheel Torque Values**.

HYDRAULIC CYLINDER REPAIR

PREPARATION

When cylinder repair is required, clean off unit, disconnect hoses and plug ports before removing cylinder.

When removed, open the cylinder ports and drain the cylinder's hydraulic fluid.

Examine the type of cylinder. Make sure you have the correct tools for the job.

You may require the following tools:

- *Proper **Seal Kit***
- *Allen Key Set*
- *Emery cloth*
- *Torque Wrench*

Threaded Head Cylinder
(Monarch)

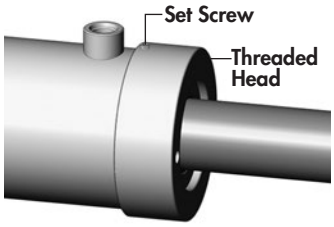

CYLINDER ROD LOCKNUT TORQUE VALUES

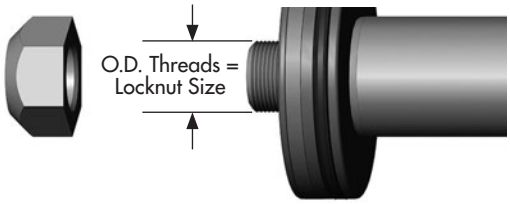

LOCKNUT SIZE (PISTON)	TORQUE VALUE
3/8 - 24 UNF	25-30 lb.ft (35-42 *N.m*)
1/2 - 20 UNF	**40-60 lb.ft *(55-80 N.m)***
5/8 - 18 UNF	95-105 lb.ft (130-140 *N.m*)
3/4 - 16 UNF	**175-225 lb.ft *(240-305 N.m)***
7/8 - 14 UNF	200-275 lb.ft (270-370 *N.m*)
1 - 14 UNF	**300-380 lb.ft *(405-515 N.m)***
1 1/8 - 12 UNF	400-500 lb.ft (540-675 *N.m*)
1 1/4 - 12 UNF	**500-600 lb.ft *(675-810 N.m)***
1 1/2 - 12 UNF	700-800 lb.ft (950-1085 *N.m*)
1 3/4 - 12 UNF	**800-900 lb.ft *(1085-1220 N.m)***

REPAIRING A THREADED HEAD CYLINDER

Set Screw Style

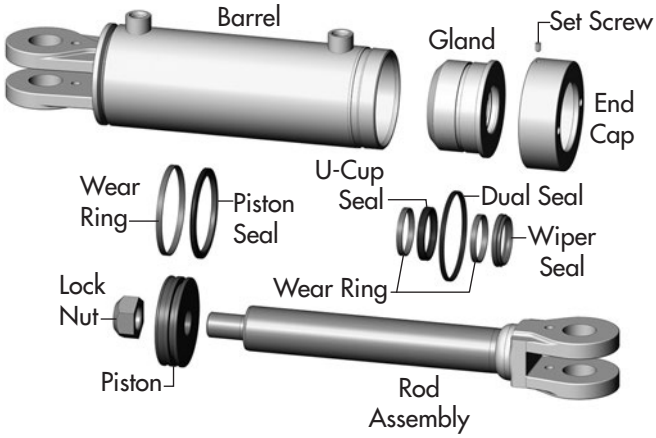

DISASSEMBLY

1. Loosen Set Screw and turn off end cap.
2. Carefully remove piston/rod/gland assemblies.
3. Disassemble the piston from the rod assembly by removing lock nut.

NOTE: *DO NOT* clamp rod by chrome surface.

4. Slide off gland assembly & end cap.
5. Remove seals and inspect all parts for damage.
6. Install new seals and replace damaged parts with new components.
7. Inspect the inside of the cylinder barrel, piston, rod and other polished parts for burrs and scratches. Smooth areas as needed with an emery cloth.

REASSEMBLY

1. Reinstall rod through end cap & gland assembly.
2. Secure piston to rod with lock nut. Torque lock nut to proper value (refer to chart for proper torque value).
3. Lube inside of barrel, piston seals, and gland seals with hydraulic oil.
4. With cylinder body held gently in a vise, insert piston, gland, end cap and rod combination using a slight rocking motion.
5. Apply Loctite anti-seize before installing cylinder end cap.
6. Torque cylinder end cap to 440 lb.ft (600 N.m).
7. Tighten Set Screw on end cap to 6 lb.ft (8 N.m).

DECAL LOCATION OVERVIEW

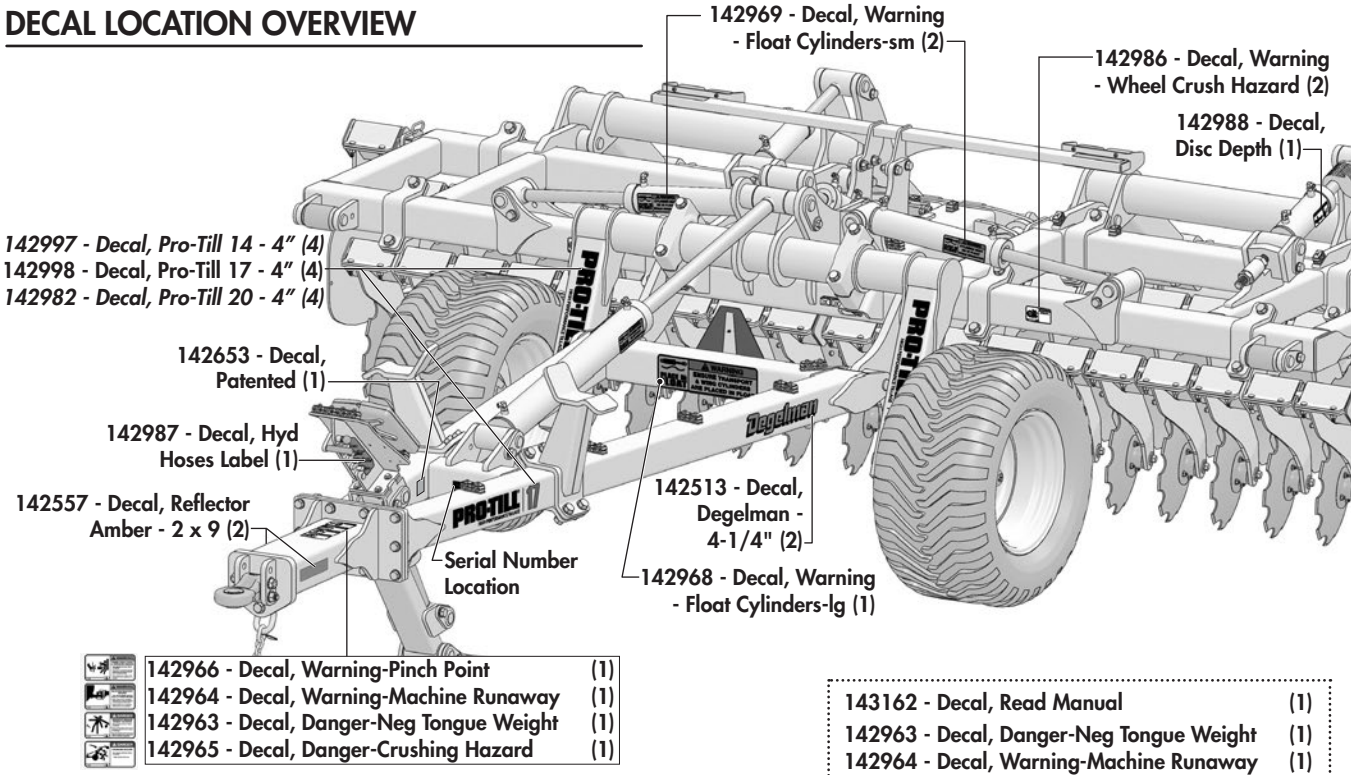

	142966 - Decal, Warning-Pinch Point	(1)
	142964 - Decal, Warning-Machine Runaway	(1)
	142963 - Decal, Danger-Neg Tongue Weight	(1)
	142965 - Decal, Danger-Crushing Hazard	(1)

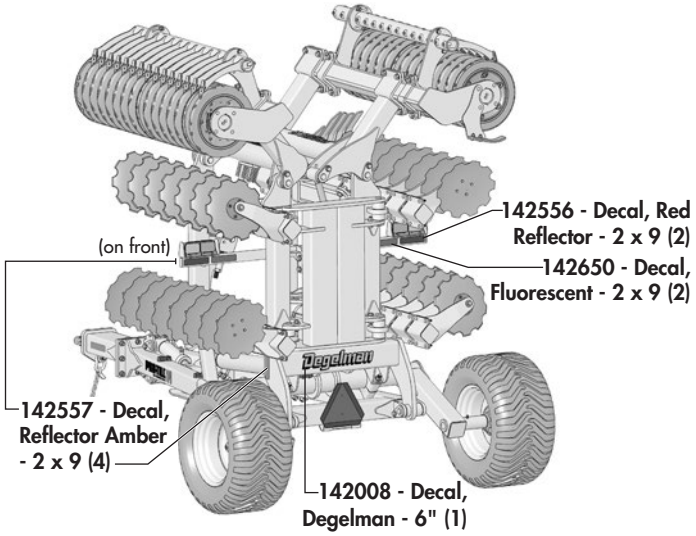

143162 - Decal, Read Manual	(1)
142963 - Decal, Danger-Neg Tongue Weight	(1)
142964 - Decal, Warning-Machine Runaway	(1)
142965 - Decal, Danger-Crushing Hazard	(1)
142966 - Decal, Warning-Pinch Point	(1)
142968 - Decal, Warning-Float Cylinders-lg	(1)
142969 - Decal, Warning-Float Cylinders-sm	(4)
142986 - Decal, Warning-Wheel Crush Hazard	(2)
142556 - Decal, Reflector Red - 2 x 9	(2)
142557 - Decal, Reflector Amber - 2 x 9	(6)
142650 - Decal, Fluorescent - 2 x 9	(2)
142987 - Decal, Hydraulic Hose Label	(1)
142988 - Decal, Disc Depth	(1)
142008 - Decal, Degelman - 6"	(1)
142513 - Decal, Degelman - 4-1/4"	(3)
142997 - Decal, Pro-Till 14 - 4"	(5)
142998 - Decal, Pro-Till 17 - 4"	(5)
142982 - Decal, Pro-Till 20 - 4"	(5)

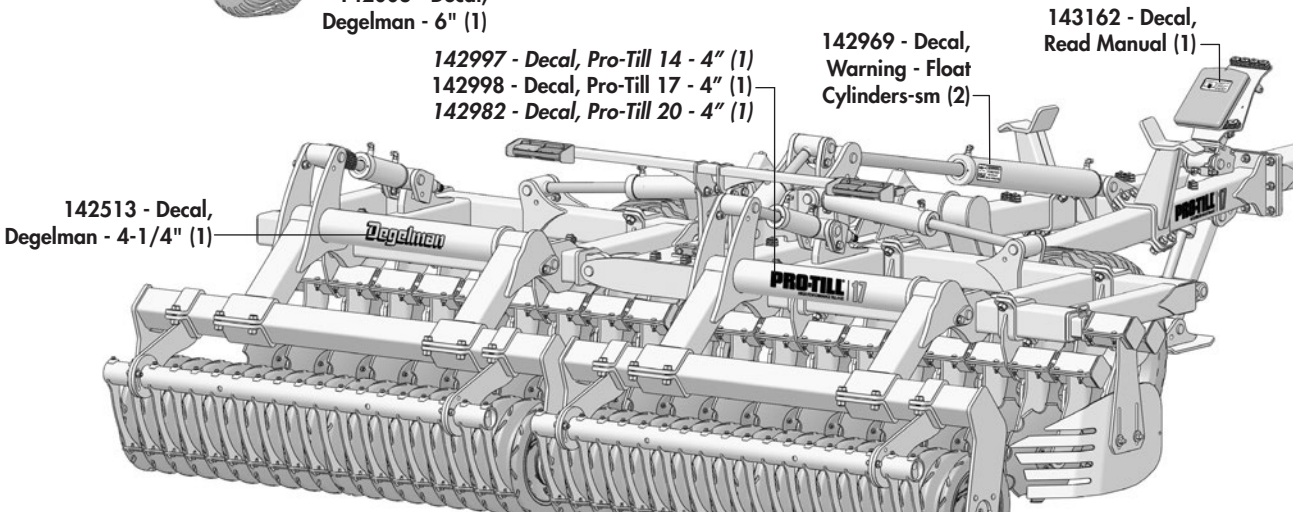

Pro-Till Part Section Overview

PARTS SECTION **- TABLE OF CONTENTS**

Pro-Till Section Overview	*25*
Hitch Pole Frame Components	*26*
Wheel & Rockshaft Components	*28*
Center Frame Components	*29*
Wing Frame Components	*30*
Disc Gang Assembly & Components	*32*
Disc Arm Components & Disc Options	*34*
Roller Options & Components	*35*
Hydraulic Routing & Cylinders	*41*
Light Routing & Components	*48*
Optional Gauge Wheel & Components	*49*
Warranty	***51***

Exploded Overview (**17' Pro-Till** model shown)

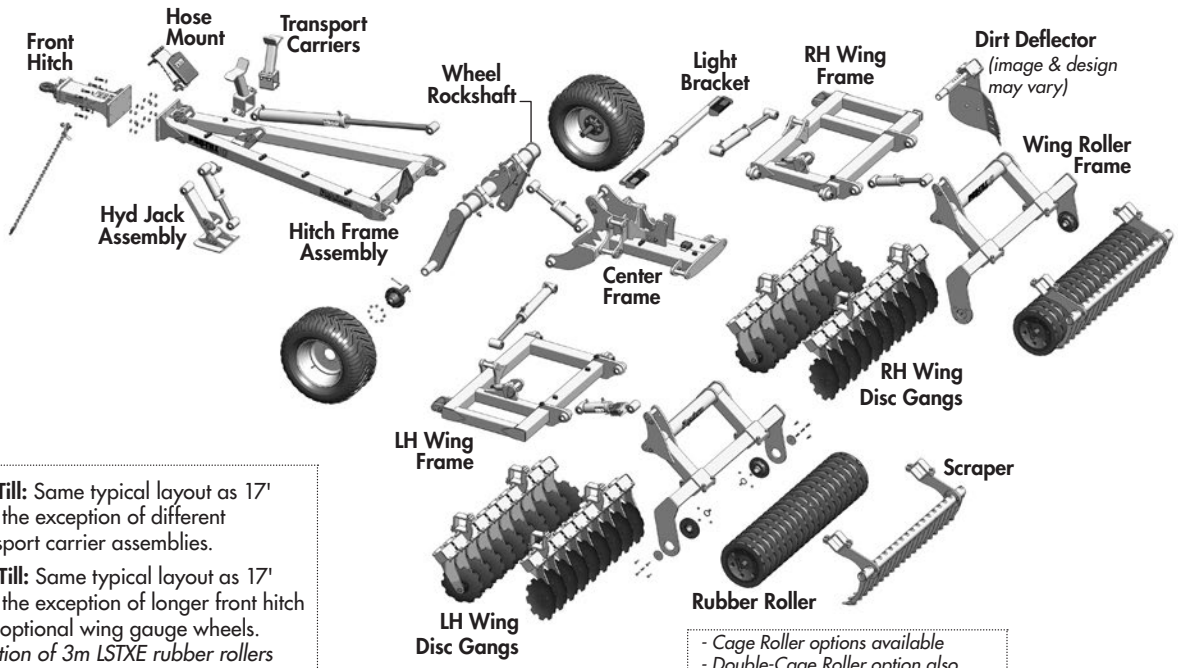

14' Pro-Till: Same typical layout as 17' with the exception of different transport carrier assemblies.

20' Pro-Till: Same typical layout as 17' with the exception of longer front hitch and optional wing gauge wheels. **Option of 3m LSTXE rubber rollers also available for PT 20 models only.*

- Cage Roller options available
- Double-Cage Roller option also available for PT17 & PT 20 models.

Front Hitch / Hitch Frame Components

Hitch Pole /Front Frame Overview

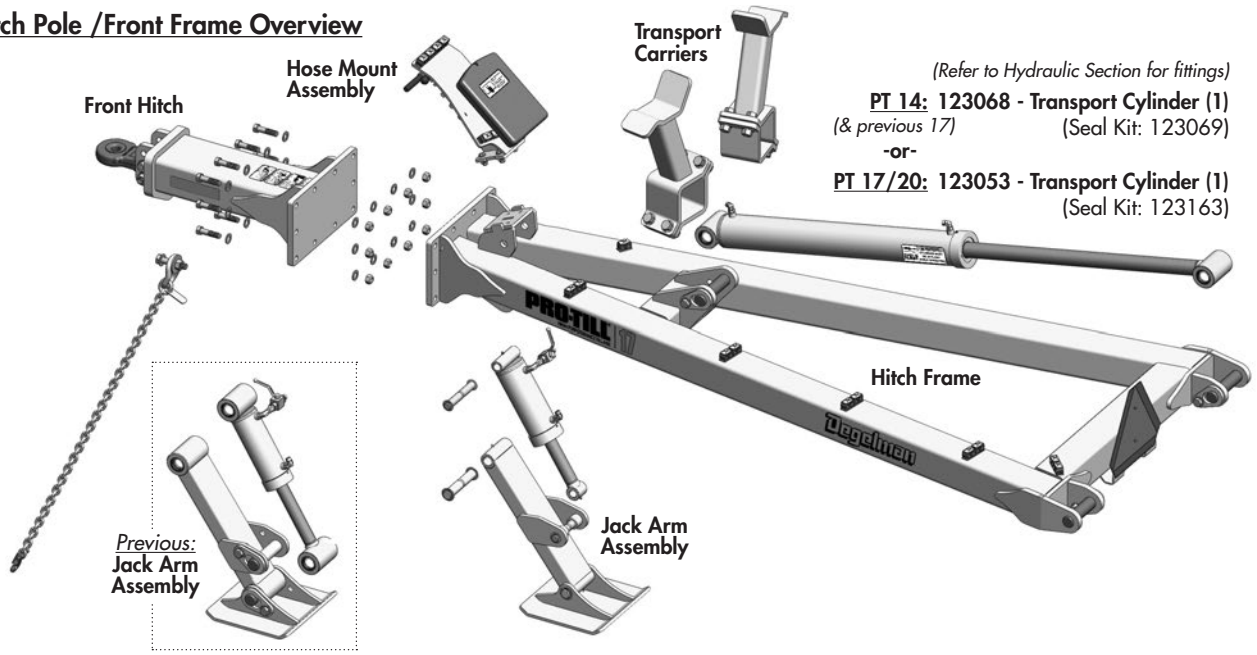

(Refer to Hydraulic Section for fittings)

PT 14: 123068 - Transport Cylinder (1) (Seal Kit: 123069)
(& previous 17)
-or-
PT 17/20: 123053 - Transport Cylinder (1) (Seal Kit: 123163)

Front Hitch Components

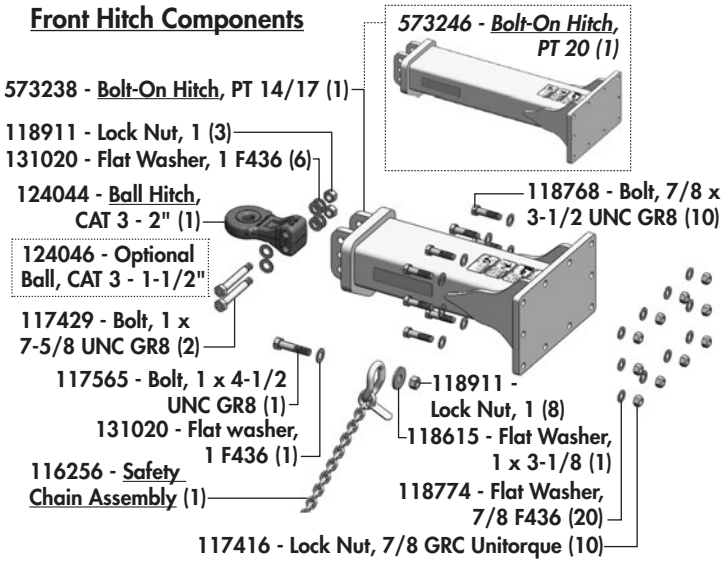

Transport Carrier Components

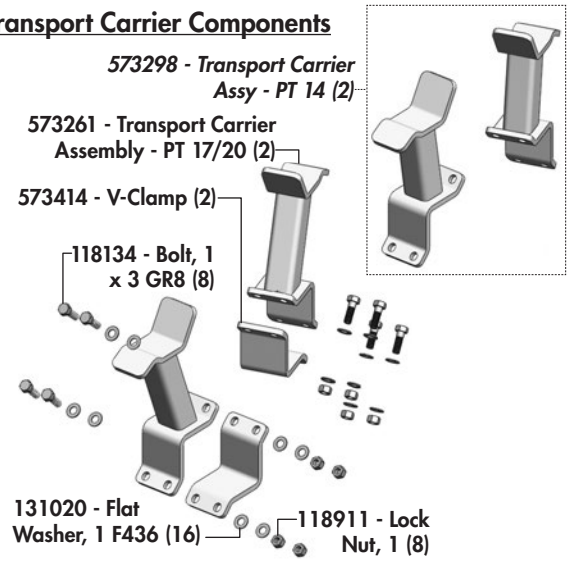

Hose Mount Components

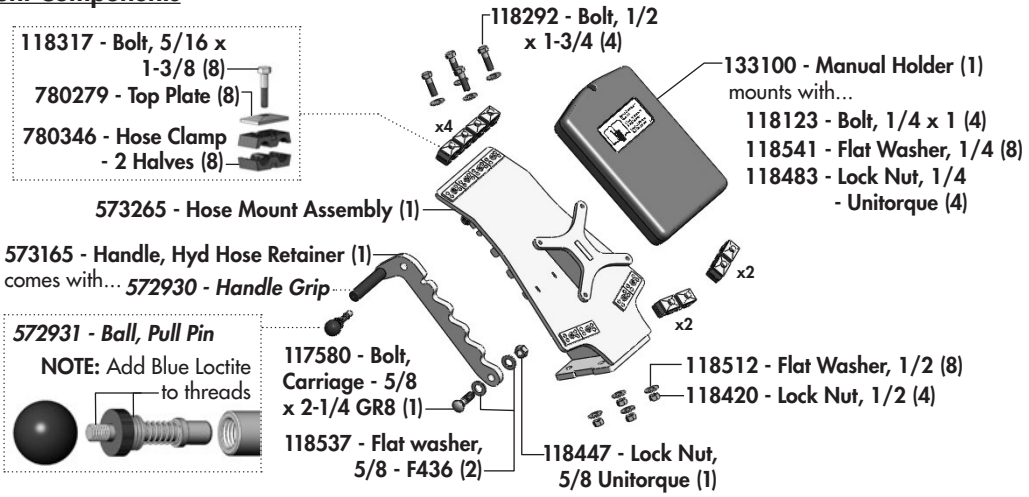

Front Hitch / Hitch Frame Components

Front Frame Components

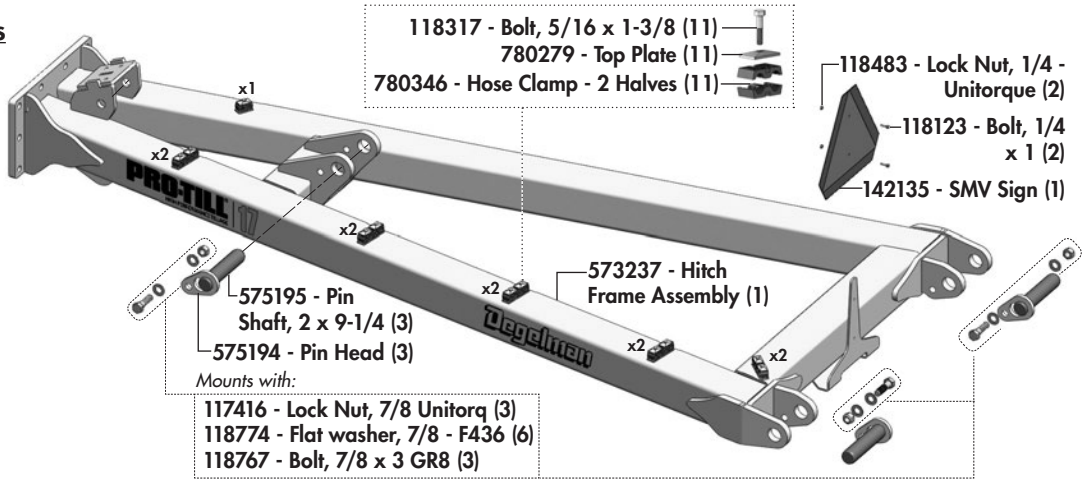

Jack Assembly Components

(For models with SN: PTL7162 & up.)

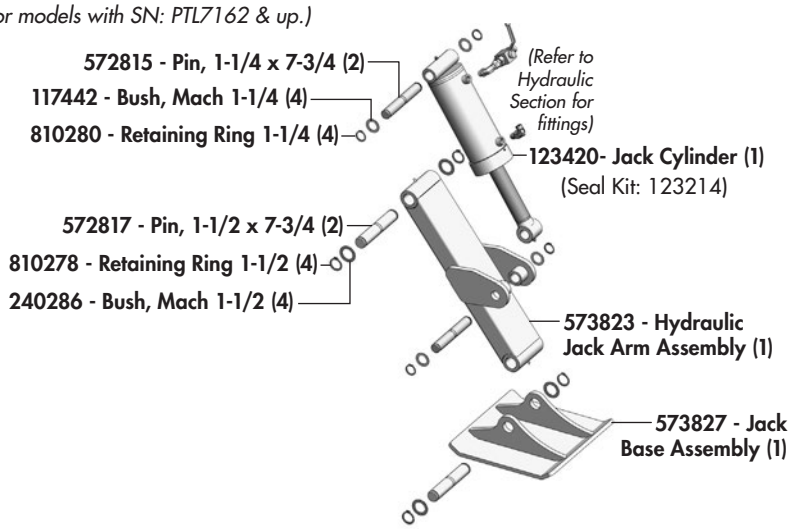

Previous: ***Jack Assembly Components***

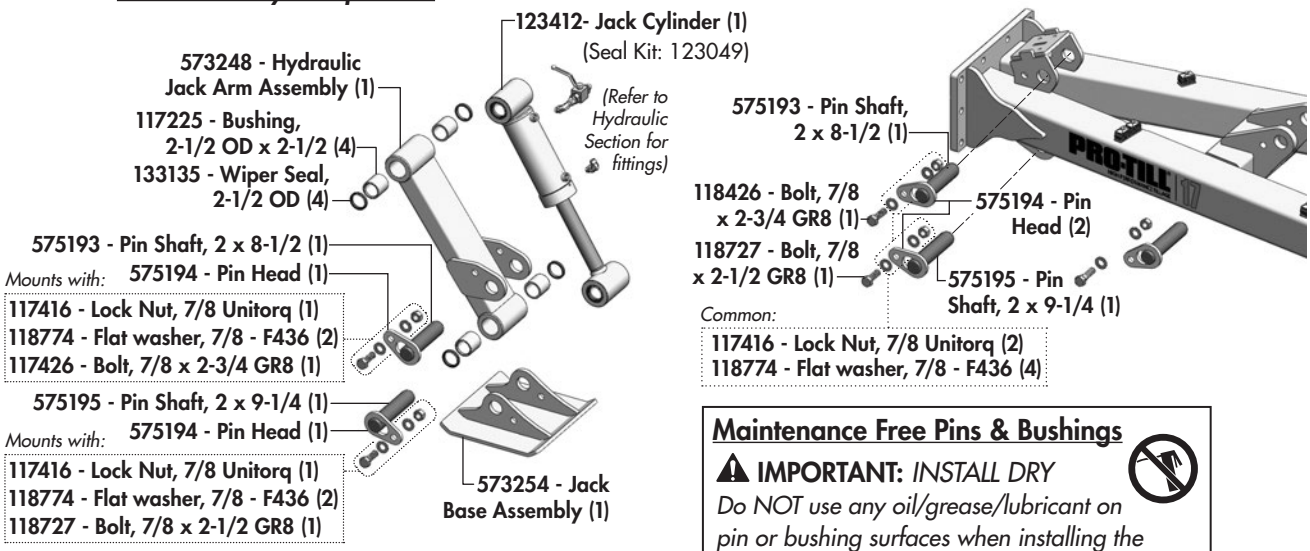

Maintenance Free Pins & Bushings

⚠ IMPORTANT: *INSTALL DRY*

Do NOT use any oil/grease/lubricant on pin or bushing surfaces when installing the maintenance free pins into composite bushings.

Wheel & Rockshaft Components

Rockshaft & Wheel Components

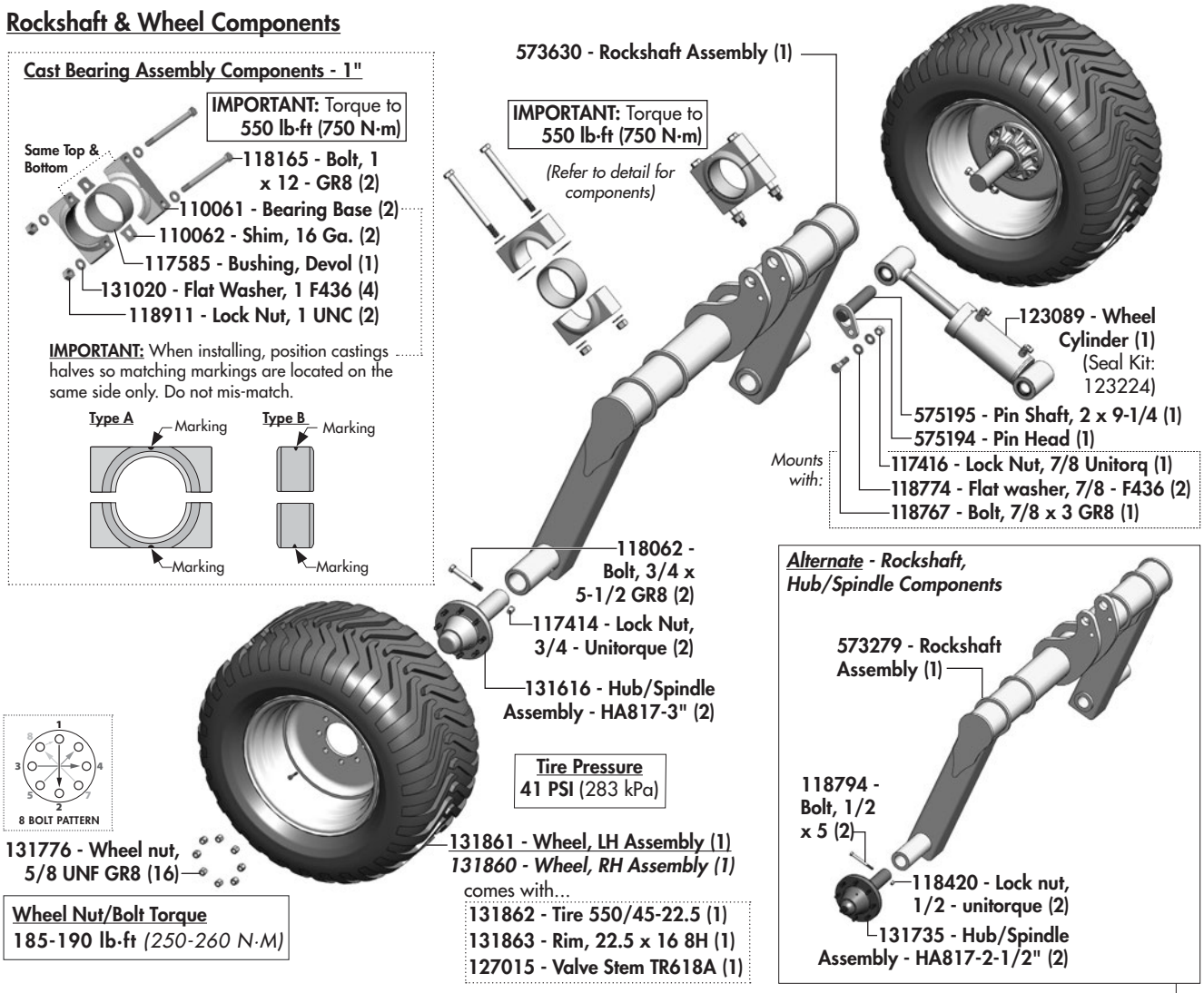

131616 - Hub/3" Spindle Assembly (2)

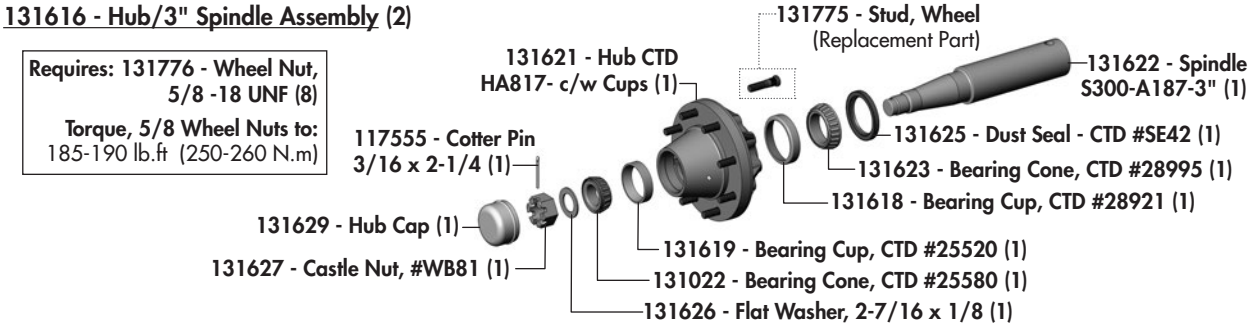

Alternate Hub/Spindle:

131735 - Hub/2-1/2" Spindle Assembly (2)

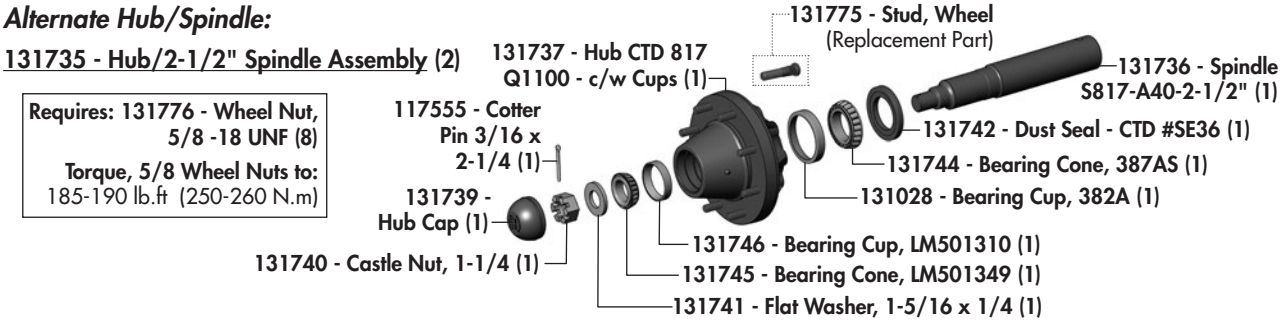

Center Frame Components

Center Frame Component Overview

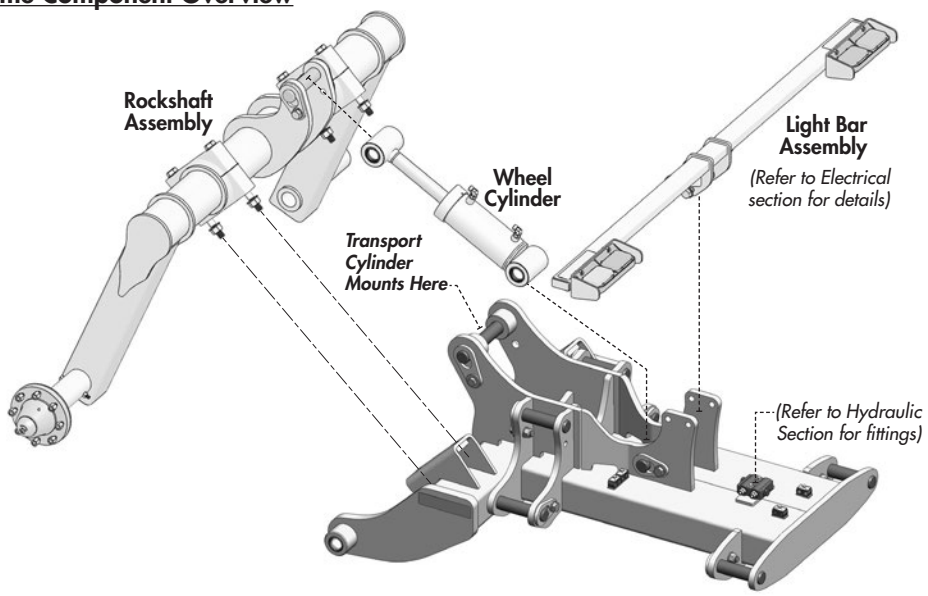

Center Frame Components

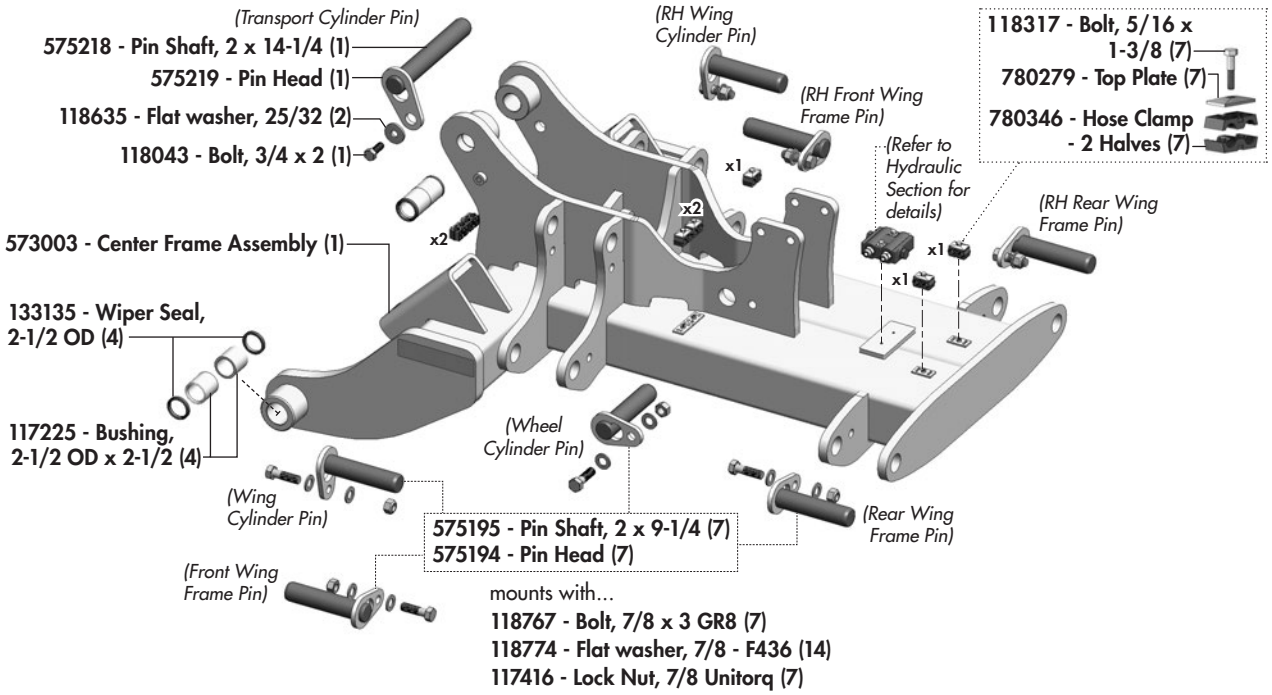

Maintenance Free Pins & Bushings

⚠ **IMPORTANT:** *INSTALL DRY*

Do NOT use any oil/grease/lubricant on pin or bushing surfaces when installing the maintenance free pins into composite bushings.

Wing Frame Components (LH)

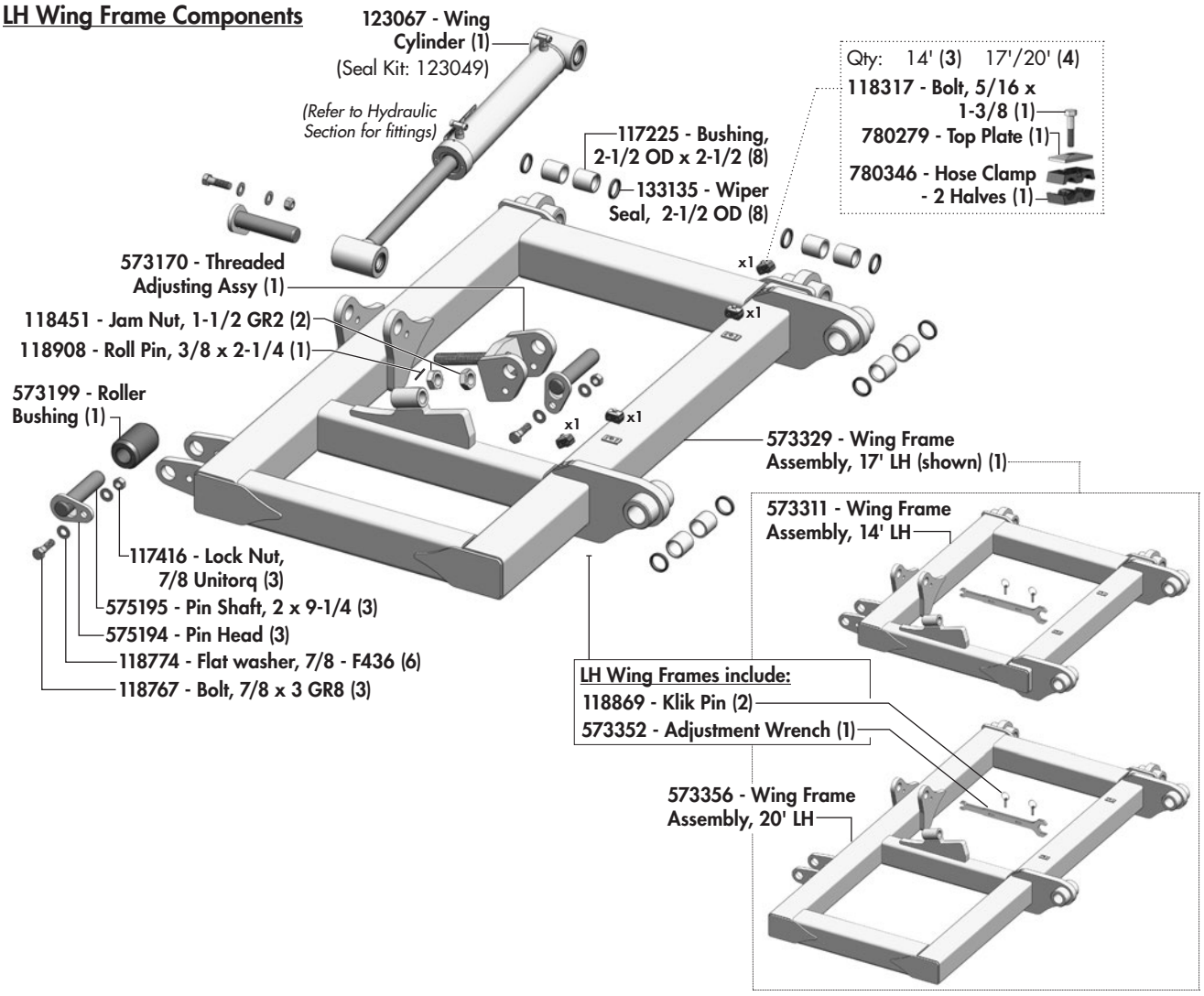

Maintenance Free Pins & Bushings

IMPORTANT: *INSTALL DRY*

Do NOT use any oil/grease/lubricant on pin or bushing surfaces when installing the maintenance free pins into composite bushings.

Wing Frame Components (RH)

RH Wing Frame Components

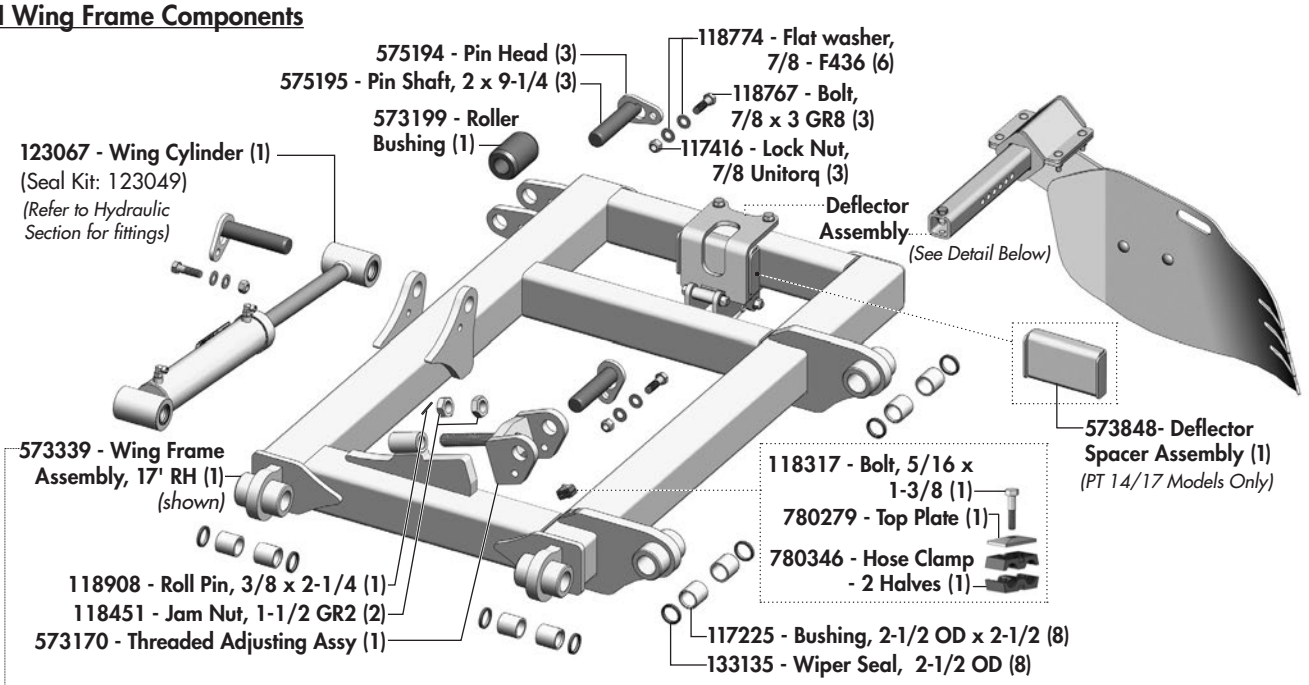

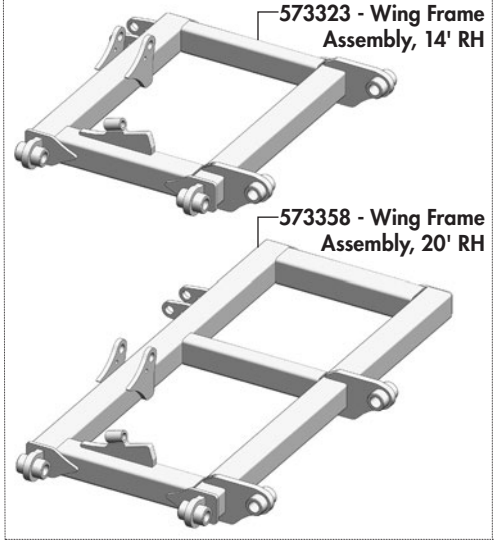

Deflector Components

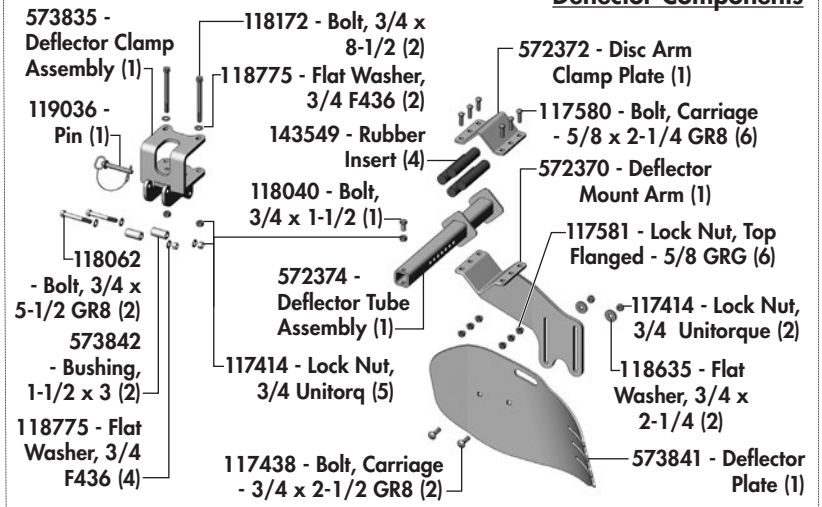

Previous Deflector Components

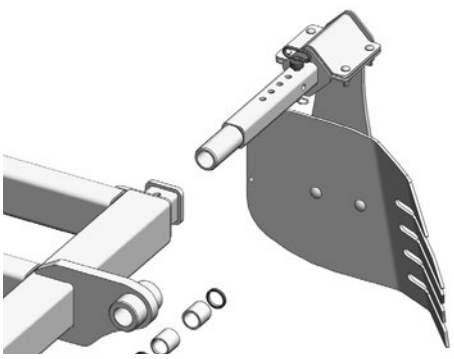

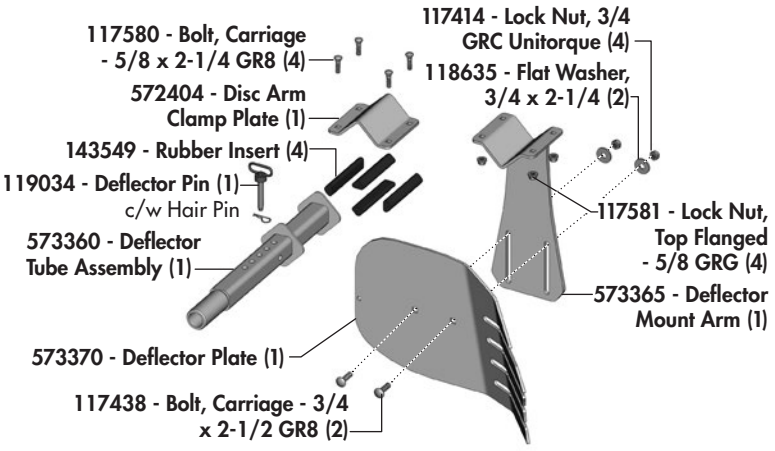

Disc Gang Components - 14/17

14' Pro-Till Disc Gang Overview

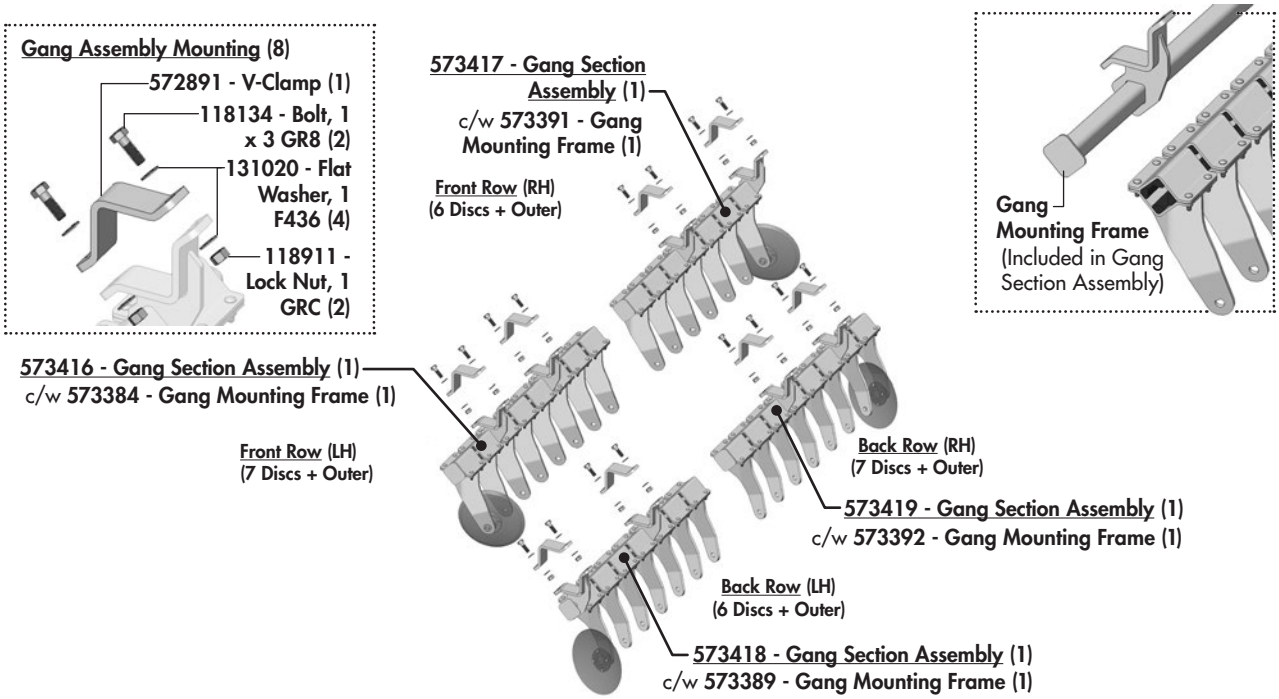

17' Pro-Till Disc Gang Overview

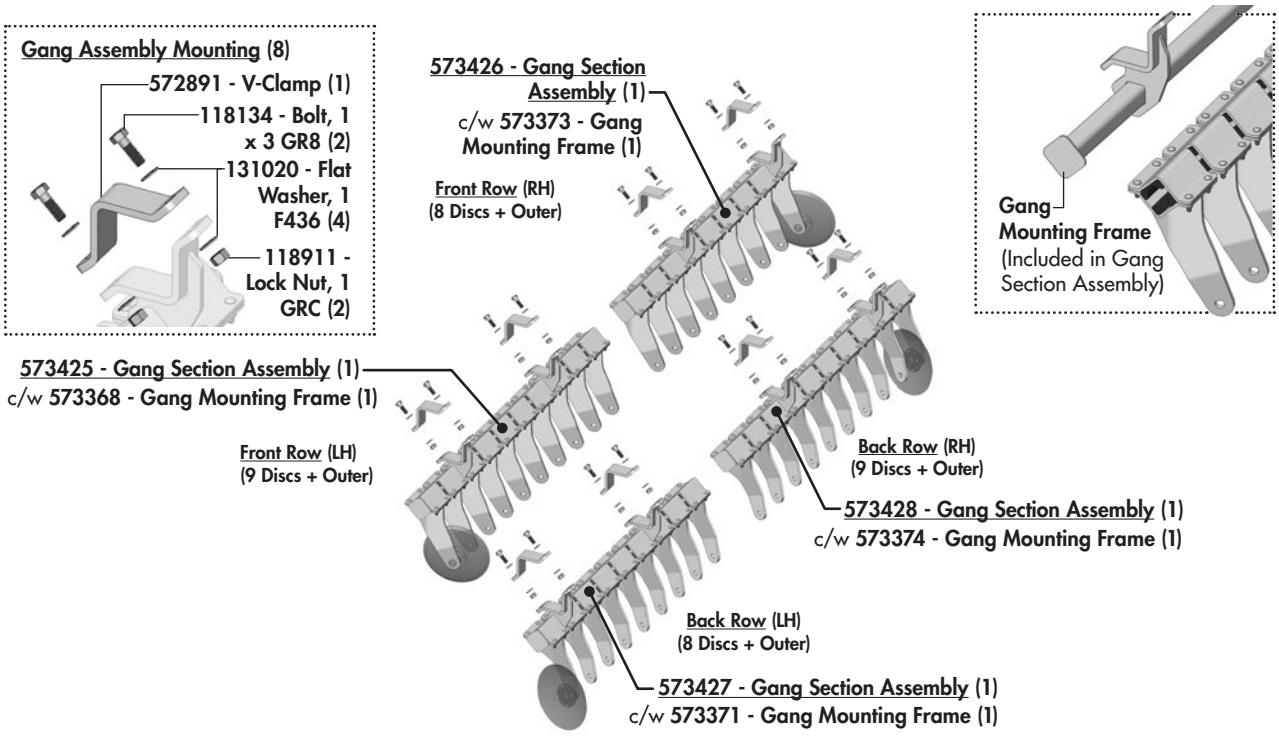

Disc Gang Components - 20

20' Pro-Till Disc Gang Overview

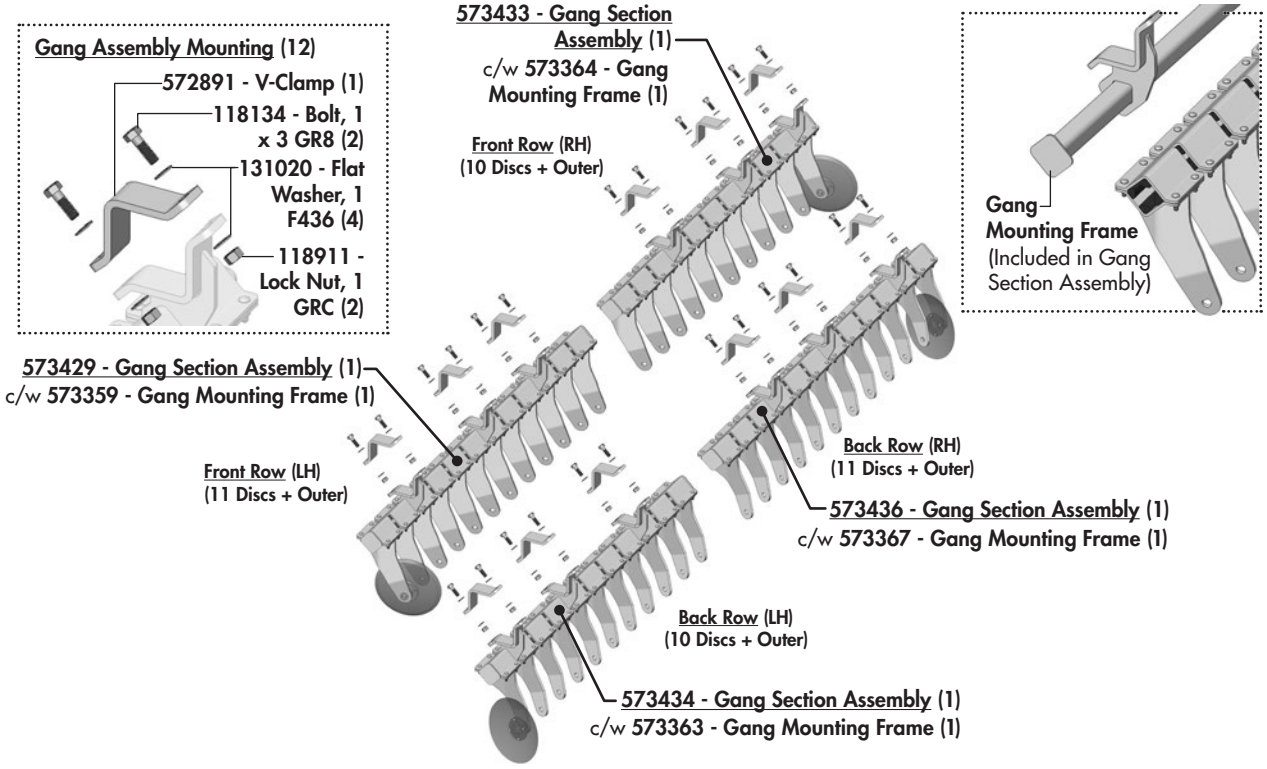

Setting Gang Section Spacing - Overview

STEP 1	14'	17'	20'
	20" Discs A = 1-1/4" B = 7-5/8" -OR- 22" Discs A = 1-3/8" B = 7-1/4"	20" Discs A = 11-1/4" B = 7-5/8" -OR- 22" Discs A = 11-3/8" B = 7-1/4"	20" Discs A = 9-1/4" B = 5-5/8" -OR- 22" Discs A = 9-3/8" B = 5-1/4"

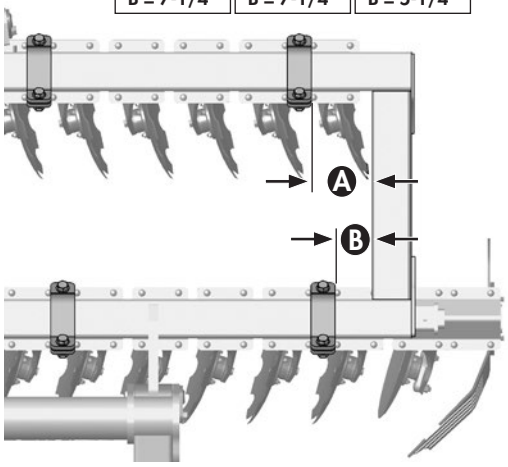

1. Gang section spacing starts by setting the distance from the inside RH Wing Frame to the edge of the first V-Clamp on front & rear gang sections.
   (Measurments - **A** *&* **B** *in diagram).*
2. Then, the distance between the *left* endcap of the first gang section and the *right* endcap of the next gang section should be set to 1-1/2". This should be the standard distance between all gang sections.

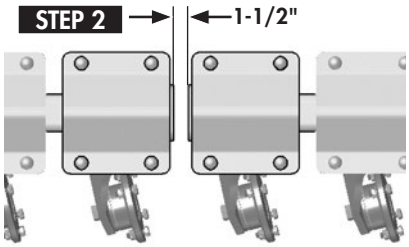

Disc Arm Components & Disc Options

Front Row - Standard Disc Assembly Components

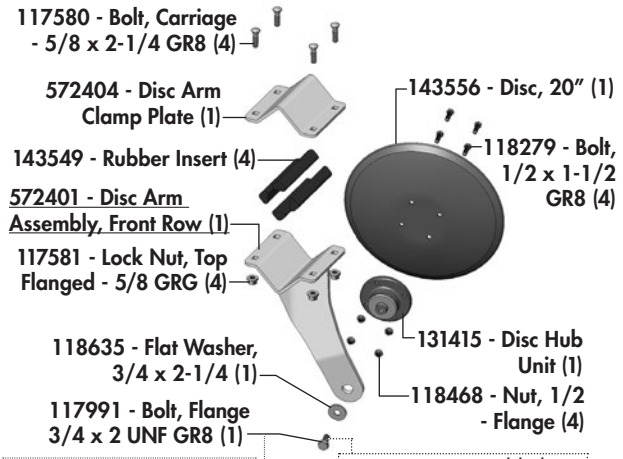

Back Row - Standard Disc Assembly Components

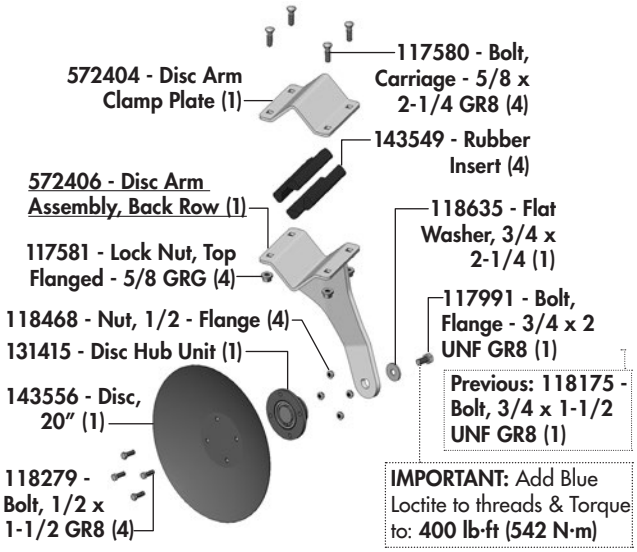

Disc Hub Components

131415 - Disc Hub Unit (Varied Suppliers) - *Replacement O-Rings*

INA - Markings



121080 - O-Ring, Nitrile M6x88 (1)

SKF - Markings



121082 - O-Ring, Nitrile M5.3x87.5 (1)

Discs/Hubs - Required Numbers Per Machine

14' Pro-Till Requires **30** Discs/Hubs
17' Pro-Till Requires **38** Discs/Hubs
20' Pro-Till Requires **46** Discs/Hubs



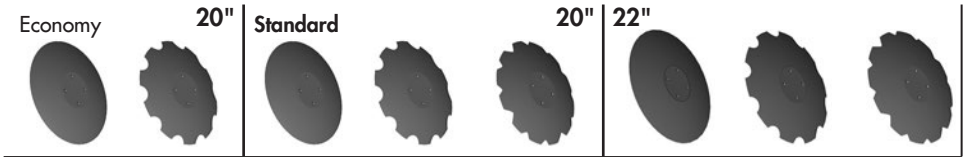

Economy Discs		Premium Discs					
20" Straight	20" *Notched*	20" Straight	20" *Notched*	20" *Double-V Notched*	22" Straight	22" *Notched*	22" *Double-V Notched*
143567	*143568*	*143556*	*143557*	*143553*	*143562*	*143563*	*143566*

Typical Factory Settings of End Discs

20" Disc Option

(3) - 20" End Discs - Straight *143556* &
(1) - 18" Rear RH - End Disc *143550*

22" Disc Option

(3) - 22" End Discs - Straight *143562* &
(1) - 20" Rear RH - End Disc *143556*

(**Note**: Customers may wish to adjust the end disc sizes and locations for customer preferred performance in certain soil or field conditions.)

Fixed Frame - Components & Roller Options *(PT14/17 & previous 20)*

Fixed Roller Frame Components (RH/LH)

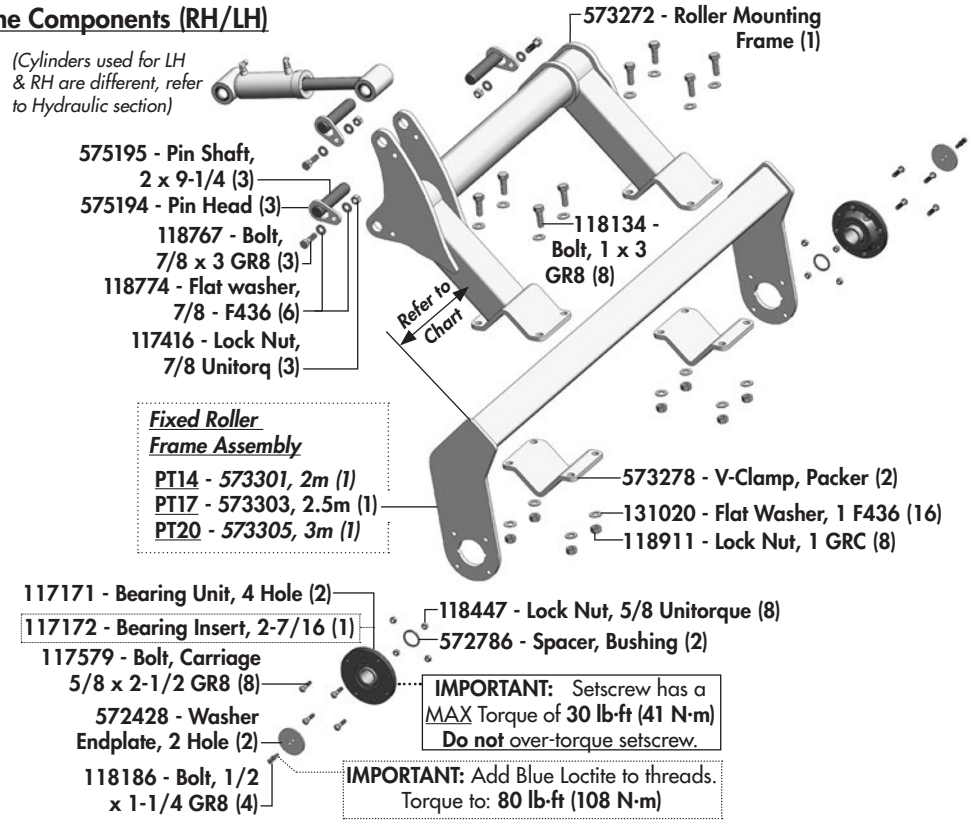

Roller Options Overview

(Fixed Roller Frame models)

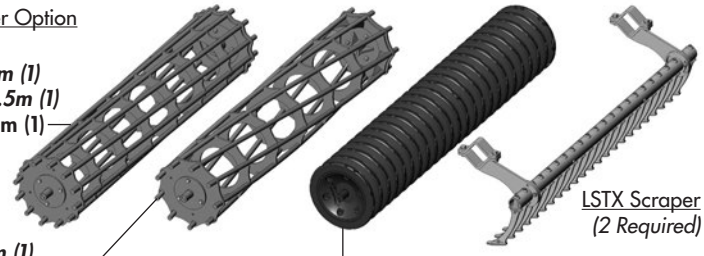

Fixed Roller Frame Positioning Guide *(Rubber & Cage Rollers - PT17 shown)*

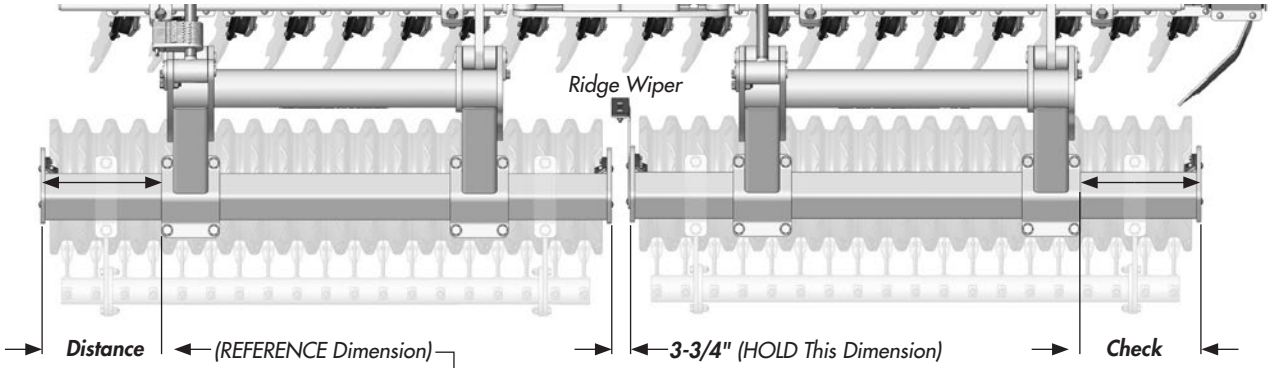

- **Position** the closest edge of the clamp bracket at the **Reference Distance** from the outer most edge of the roller frame plate. *(Refer to chart)*

PT Model	Distance
14'	1-1/4"
17'	20-3/4"
20'	40-3/8"

- **HOLD** this **3-3/4"** Distance between the outer most edges of the roller frames.
- **Check** this final distance from the clamp edge to the outer most edge of the roller frame plate. It should be the same or close to the intital **Reference Distance.**

Bolted Frame - Components & Roller Options *(PT20 Only)*

Bolted Roller Frame Components (RH/LH)

(Cylinders used for LH & RH are different, refer to Hydraulic section)

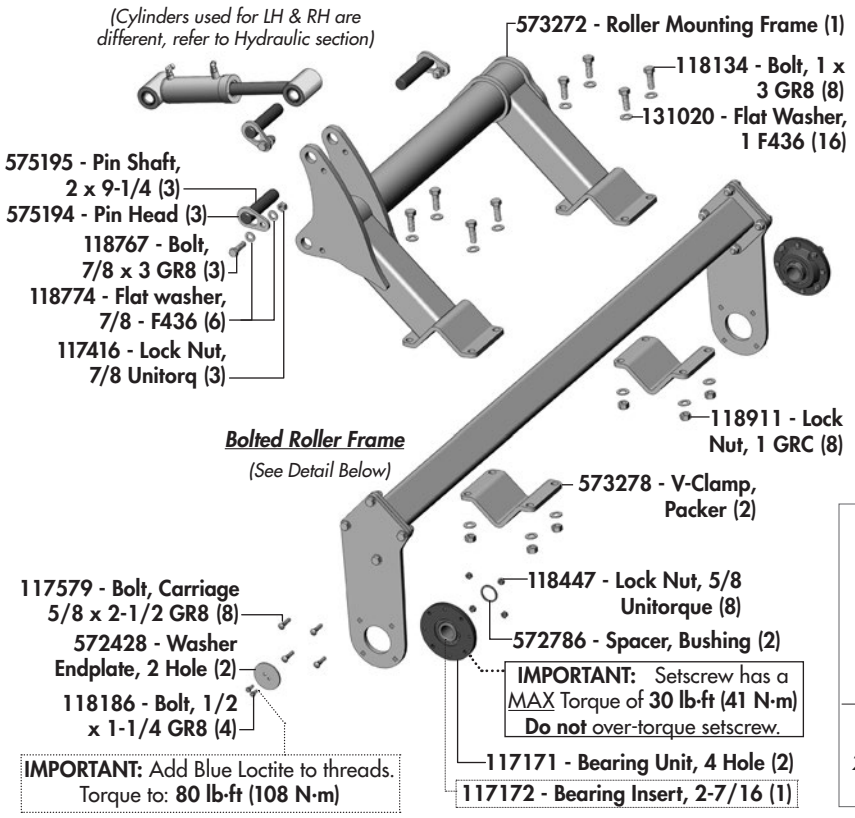

IMPORTANT: Add Blue Loctite to threads. Torque to: **80 lb·ft (108 N·m)**

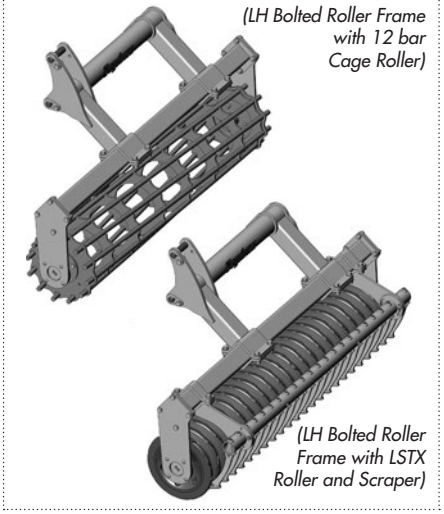

Bolted Roller Frame Positioning - PT20 NT (3m)

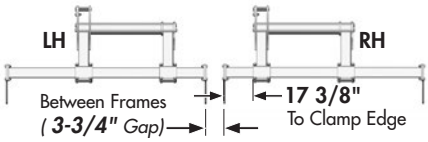

1. *Position the RH roller frame as shown.*
2. *Use a distance of 3-3/4" between the ends of the RH and LH roller frame to set the LH frame position.*

Bolted Roller Frame Components

LSTXE ONLY: These shims *(one per side)* are ***only used with*** **LSTXE Rollers.**
575788 - 5/8" Shims (2) for 3m Rollers.

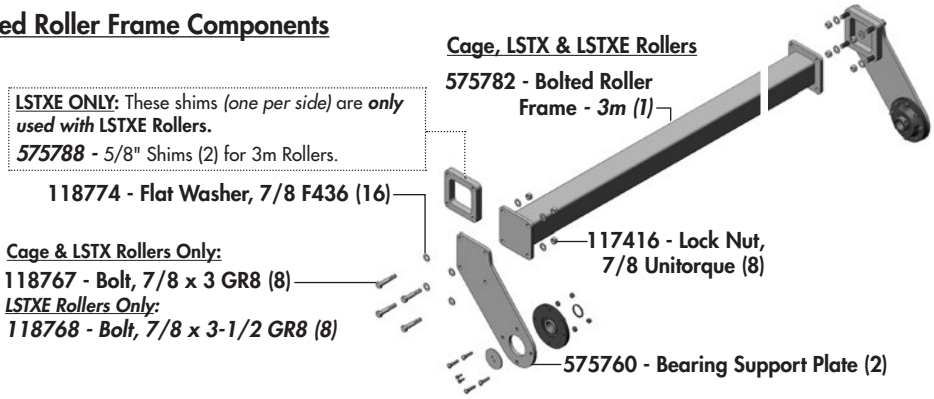

Roller Options Overview *(Bolted Roller Frame PT20 Models only)*



Cage Rollers

A 12 Bar Cage Roller
572465 - Cage Roller Assembly, 12-Bar - 3m (1)

B 9 Bar Cage Roller
572479 - Cage Roller Assembly, 9 Bar 3m (1)

LSTX Rollers

C LSTX Rubber Roller
131845 - Rubber Roller Assembly, LSTX 3m (1)

D LSTX Scraper, Wing
- 572440 - Standard Assembly, 3m (1)
- 572459 - Max-Life Assembly, 3m (1)

LSTXE Rollers

E LSTXE Rubber Roller
131908 - Rubber Roller Assembly, LSTXE - 3m (1)

F LSTXE Rock Ejector
575802 - Rock Ejector Assy LSTXE 3m (1)

LSTXE Previous Scraper

G LSTXE Scraper
573815 - Scraper Assembly - 3m (1)

(LH & RH)

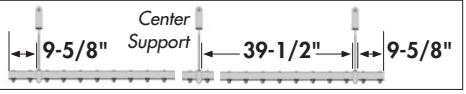

Double Cage Roller & Roller Frame Assemblies *(PT17 & PT20 Only)*

Roller Assembly Overview

Double Cage Rollers	PT17	PT20
A 2.5M Double Cage Roller	(2)	(0)
B 3M Double Cage Roller	(0)	(2)

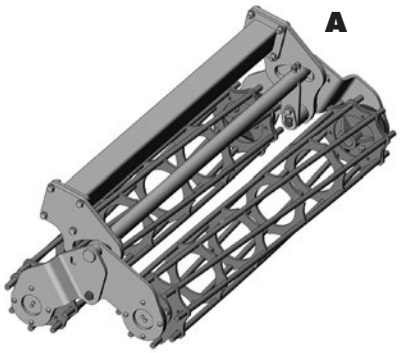

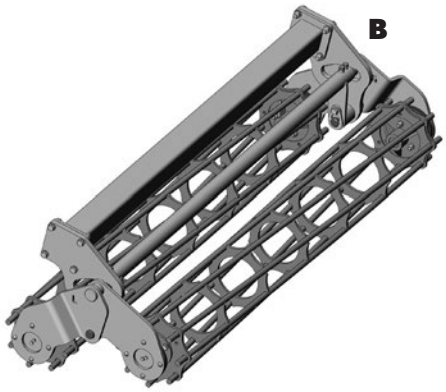

Double Cage Roller Frame Components

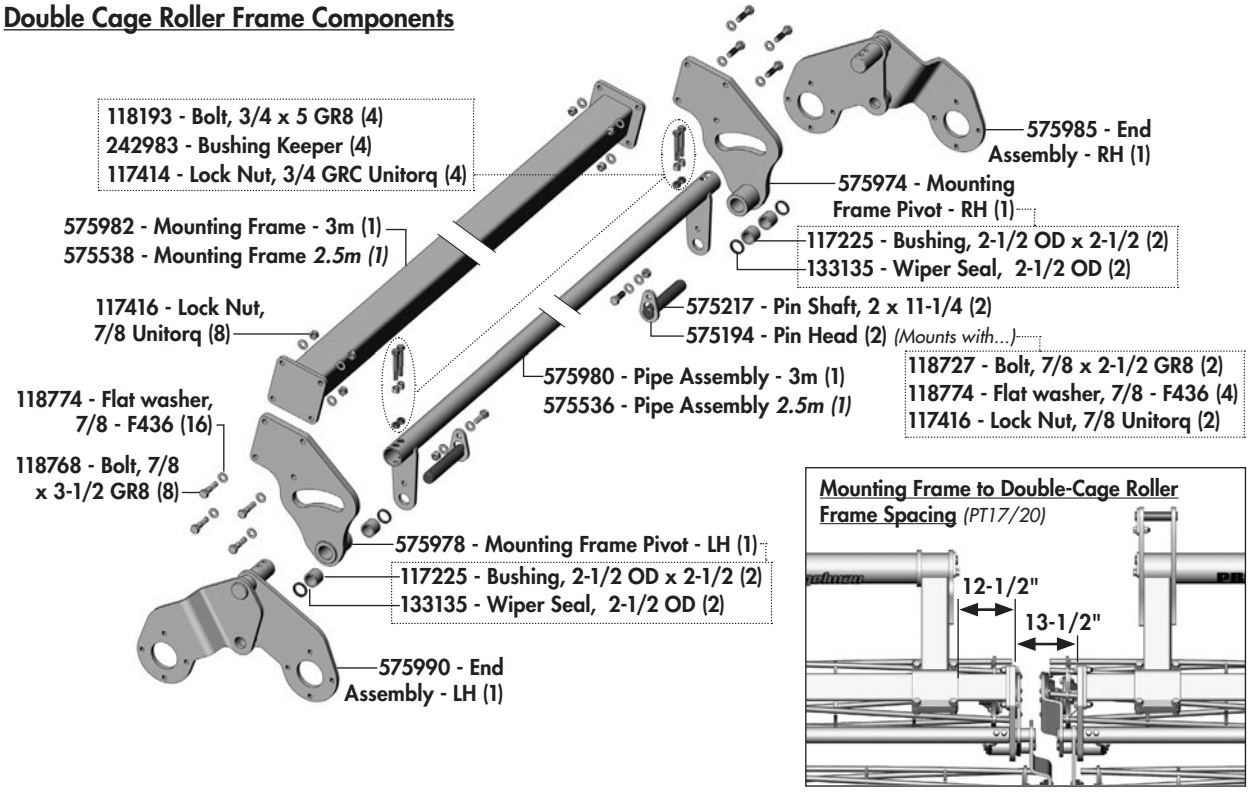

Mounting Frame to Double-Cage Roller Frame Spacing *(PT17/20)*

Common Roller Bearing Components

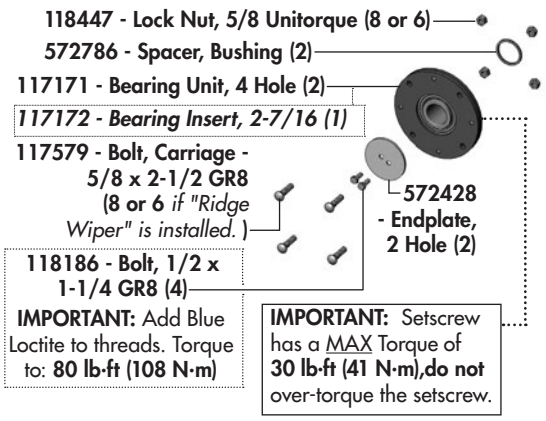

Double Cage Roller Part Components

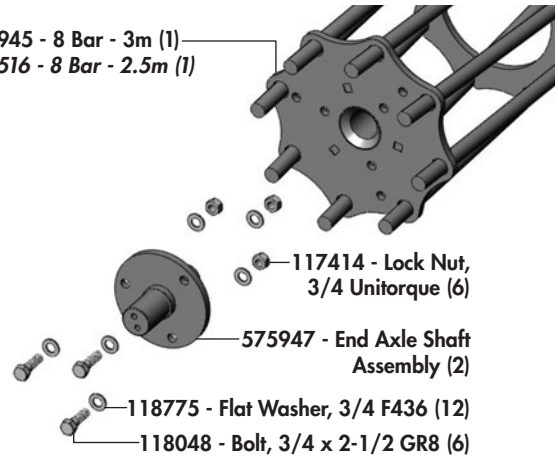

Single Rubber/Cage Roller & Ridge Wiper Components

Ridge Wiper Components

Knocks down the possible ridge of dirt left from buildup in-between the rollers.

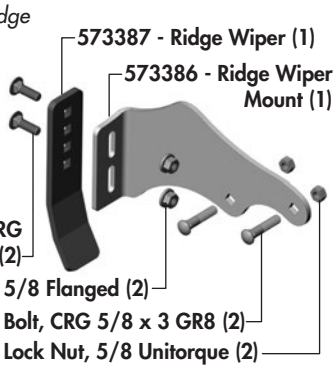

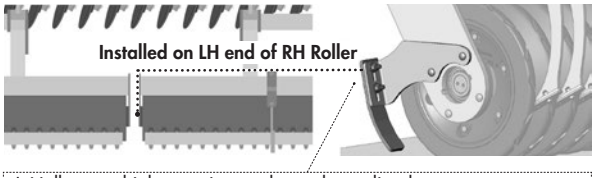

Initially set to highest setting as shown then adjust lower as necessary until desired results are achieved.

Note: *Setting too low can result in a trench or possibly cause plugging.*

Rubber Roller Components - LSTX Models



Rubber Roller Components - LSTXE Models *(3m Only)*



Cage Roller Components

572463 - 12 Bar - 2m (1)
572414 - 12 Bar - 2.5m (1)
572464 - 12 Bar - 3m (1) (shown)

572474 - 9 Bar - 2m (1)
572476 - 9 Bar - 2.5m (1)
572478 - 9 Bar - 3m (1)

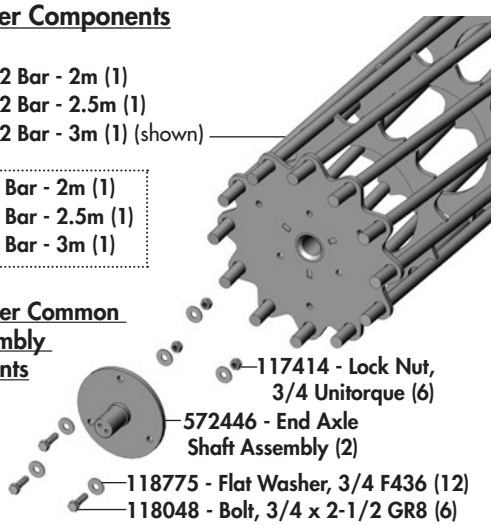

Rubber Roller Common End Assembly Components

131896 - Repair Toolkit (1)
(required for removal of endplate)

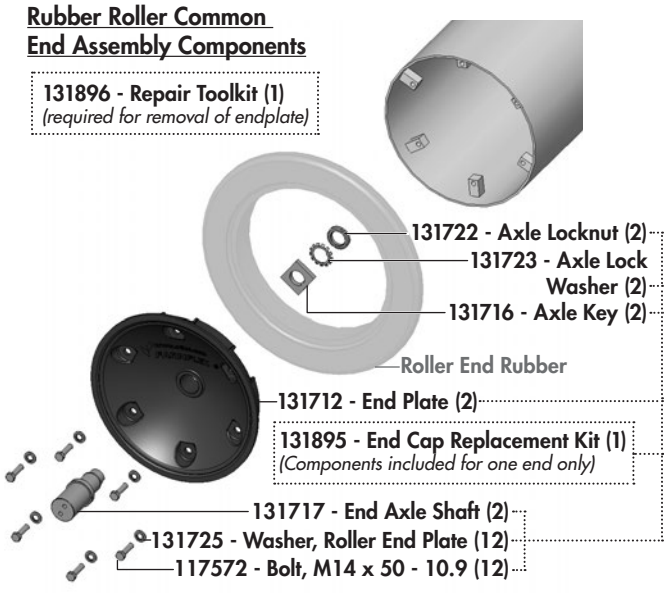

Scraper Components

Scraper Section Component Overview

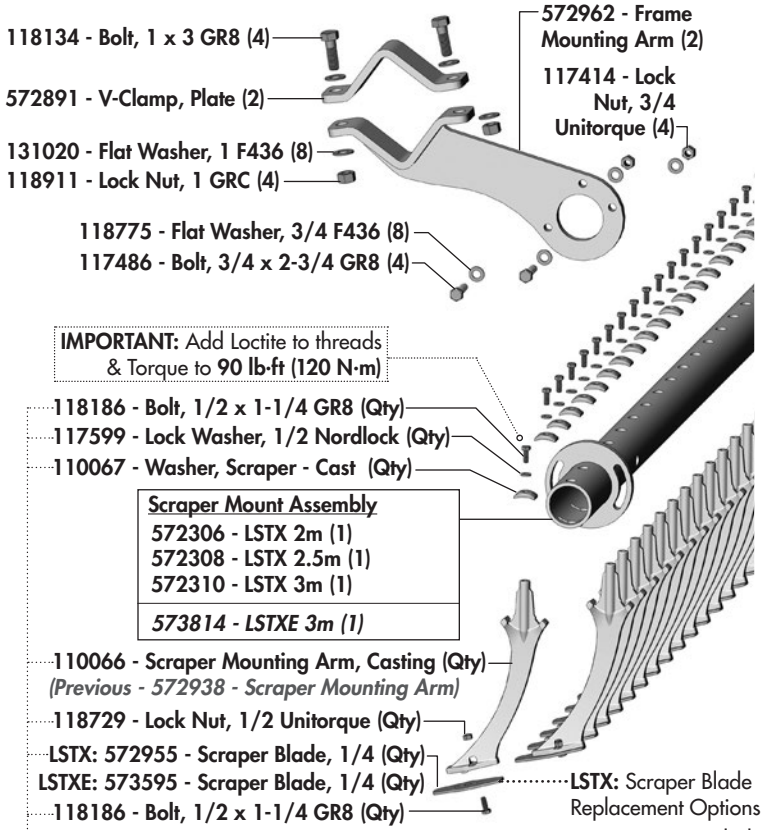

Qty per Mount Assembly

LSTX,	2m	(Qty - 15)
LSTX,	2.5m	(Qty - 19)
LSTX,	3m	(Qty - 23)
LSTXE,	3m	(Qty - 19)

Roller Model Quick-Reference

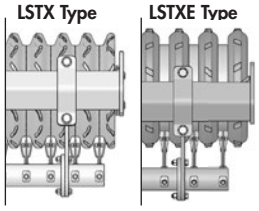

LSTX: Scraper Blade Replacement Options

LSTXE: Scraper Blade Replacement Options

LSTXE: Scraper Blades



PT20
Qty: (38)

573595 - LSTXE Scraper Blade, STD 1/4 (Qty)
mounts with:
118186 - Bolt, 1/2 x 1-1/4 GR8 (Qty)
118729 - Lock Nut, 1/2 Unitorque (Qty)

LSTX - Scraper Blades

Standard LSTX Blade Kits (c/w blades, bolts & locknuts)
KIT: **14'** 572687 (30) **17'** 572688 (38) **20'** 572676 (46)

572955 - Scraper Blade, Standard - 1/4
mounts with:
118186 - Bolt, 1/2 x 1-1/4 GR8
118729 - Lock Nut, 1/2 Unitorque



Max-Life LSTX Blade Kits
Note: ***requires*** new hardware (*locknuts*).
KIT: **14'** 572689 (30) **17'** 572694 (38) **20'** 572649 (46)

572957 - Scraper Blade, Max-Life - 1/4
mounts with:
118186 - Bolt, 1/2 x 1-1/4 GR8
118729 - Lock Nut, 1/2 Unitorque



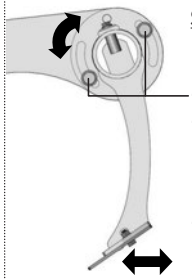

Setting the Gap Quick-Reference
(**NOTE:** *Refer to adjustment section of manual for more detailed info.*)

- Loosen the 4 bolts to rotate.
- Set the Scraper-to-Roller Gap distance between either:
  (**1/4"** to **3/8"**) for **LSTX Rollers** or
  (**3/4"** to **1"**) for **LSTXE Rollers**
- Then, properly tighten.

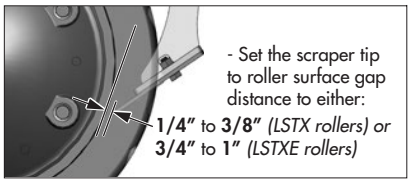

- Set the scraper tip to roller surface gap distance to either:
1/4" to **3/8"** *(LSTX rollers) or*
3/4" to **1"** *(LSTXE rollers)*

LSTXE Roller Rock Ejector Components *(PT 20 Bolted Frame Models Only)*

LSTXE Rock Ejector Component Overview

(PT20 Models above SN PTL 6909)

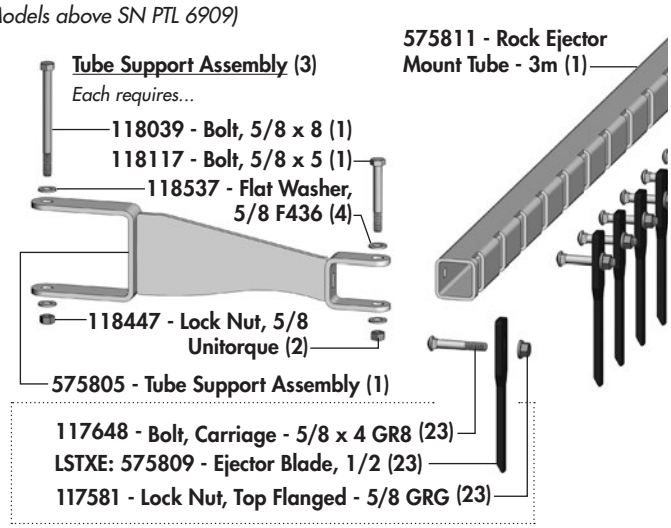

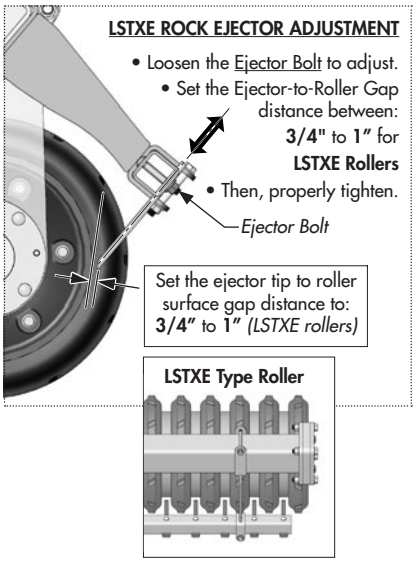

Hydraulic Layout - 1 - Depth

Hydraulic Fittings Required

1	141581 - Coupler Tip, 3/4 ORB F	(2)	
2	141676 - Connector, 3/4 ORB M x M	(0)	
3	141830 - Coupler, Green (+)	(1)	
4	141831 - Coupler, Green (-)	(1)	
5	141703 - Adaptor, 1/2 ORB M x ORFS M	(2)	
6	141704 - Elbow, 90° 1/2 ORB M x ORFS M	(5)	(6)

8	141707 - Tee, 1/2 ORFS M x M x 1/2 ORB M-adj	(1)
9	141679 - Nipple, 3/4 ORB M x 3/4 ORB M-adj	(1)
10	141735 - Hydraulic Check Valve	(1)
11	141711 - Elbow, 90° 1/2 ORFS M x 9/16 ORB M	(1)
12	141715 - Elbow, 90° 1/2 ORFS F-SW x ORFS M	(1)
13	126755 - Hose, 1/2 x 8 - 1/2 ORFS F-SW-1 EL	(1)

Required Hoses for Depth Cylinders

- (140) 126759 - Hose, 3/8 x 140 (1)
- (164) 126774 - Hose, 3/8 x 164 (1)
- (320) 126777 - Hose, 3/8 x 320 (1)
- (370) 126789 - Hose, 3/8 x 370 (1)

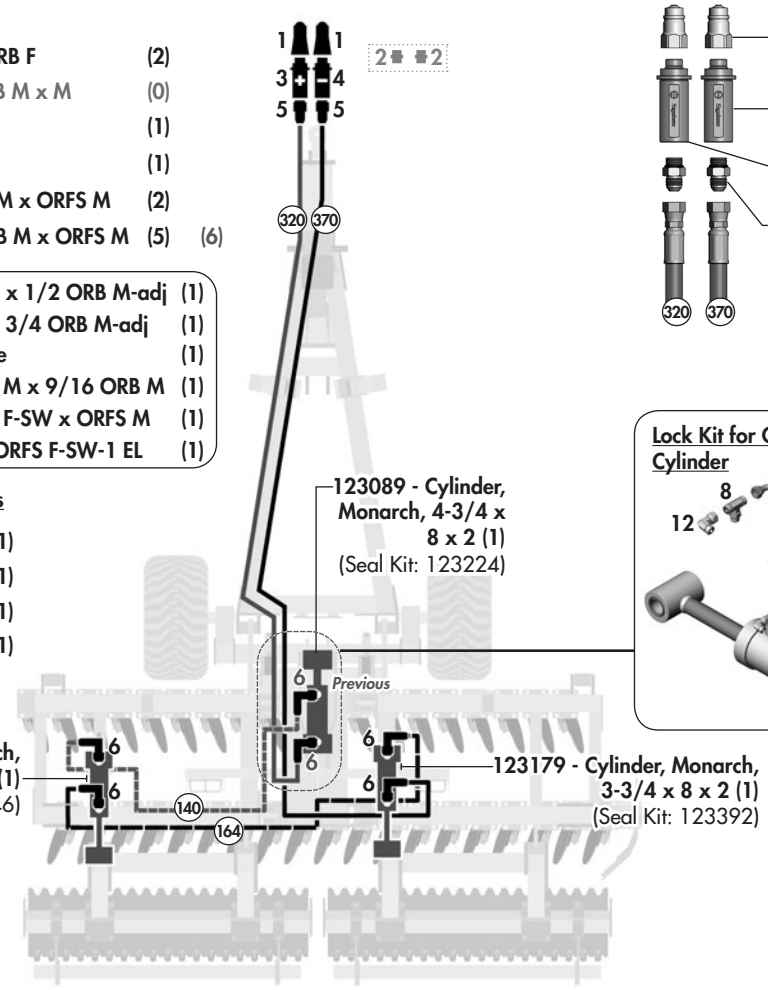

Lock Kit for Center Cylinder

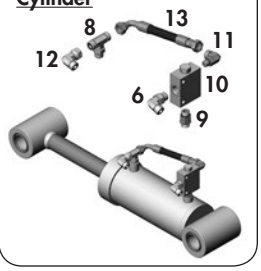

123178 - Cylinder, Monarch - 4-1/4 x 8 x 2 (1)

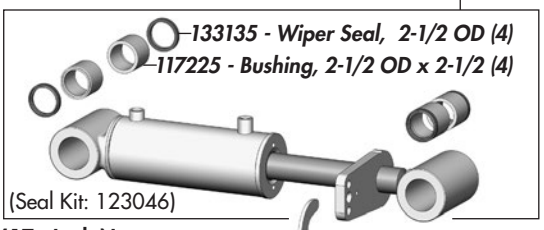

(Seal Kit: 123046)

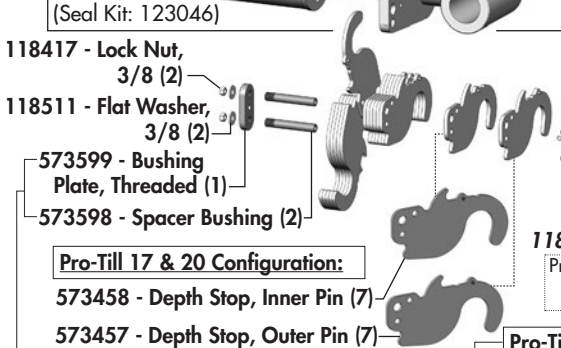

Pro-Till 17 & 20 Configuration:

573458 - Depth Stop, Inner Pin (7)

573457 - Depth Stop, Outer Pin (7)

(**Note**: The factory height setting of the threaded bushing / bolt plate bushing distance is set by using the stack of depth plates and a gap clearance of less than 1/32")

Pro-Till 14 Configuration:

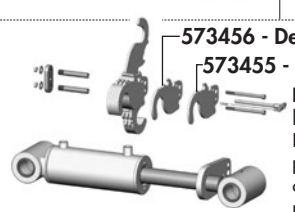

573456 - Depth Stop, Inner Pin (7)

573455 - Depth Stop, Outer Pin (7)

NOTE: Depth stop plates are located on opposite side for Pro-Till 14 and require different part numbers. All the other components have the same part numbers for both configurations.

123179 - Cylinder, Monarch - 3-3/4 x 8 x 2 (1)

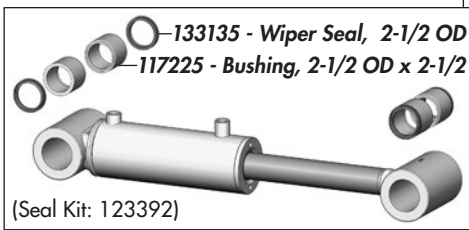

(Seal Kit: 123392)

123089 - Cylinder, Monarch - 4-3/4 x 8 x 2 (1)

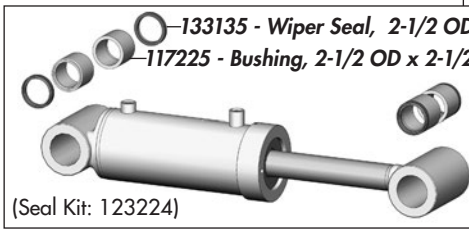

(Seal Kit: 123224)

Maintenance Free Pins & Bushings

⚠ **IMPORTANT:** *INSTALL DRY*

Do NOT use any oil/grease/lubricant on pin or bushing surfaces when installing the maintenance free pins into composite bushings.

Hydraulic Layout - 2 - Wings *(Pro-Till 14/17/20 models)*

(PT20 Models with *Wing Pressure Kit,* see next page)

Hydraulic Fittings Required

1	141581 - Coupler Tip, 3/4 ORB F	(2)
2	141676 - Connector, 3/4 ORB M x M	(0)
3	141832 - Coupler, Blue (+)	(1)
4	141833 - Coupler, Blue (-)	(1)
5	141703 - Adaptor, 1/2 ORB M x ORFS M	(6)
6	141704 - Elbow, 90° 1/2 ORB M x ORFS M	(2)
7	141707 - Tee, 1/2 ORFS M x M x ORB M	(2)
8	122668 - Orifice, 3/4-16 UNF	(2)
9	141524 - Relief Valve, 2000 PSI - 3/4 ORB	(1)

Required Hoses for Wing Cylinders

- (43) 126742 - Hose, 3/8 x 43 (2)
- (63) 126790 - Hose, 3/8 x 63 - 1/2 ORFS F-SW EL (2)
- (266) 126776 - Hose, 3/8 x 266 (1)
- (288) 126792 - Hose, 3/8 x 288 - 1/2 ORFS F-SW EL (1)

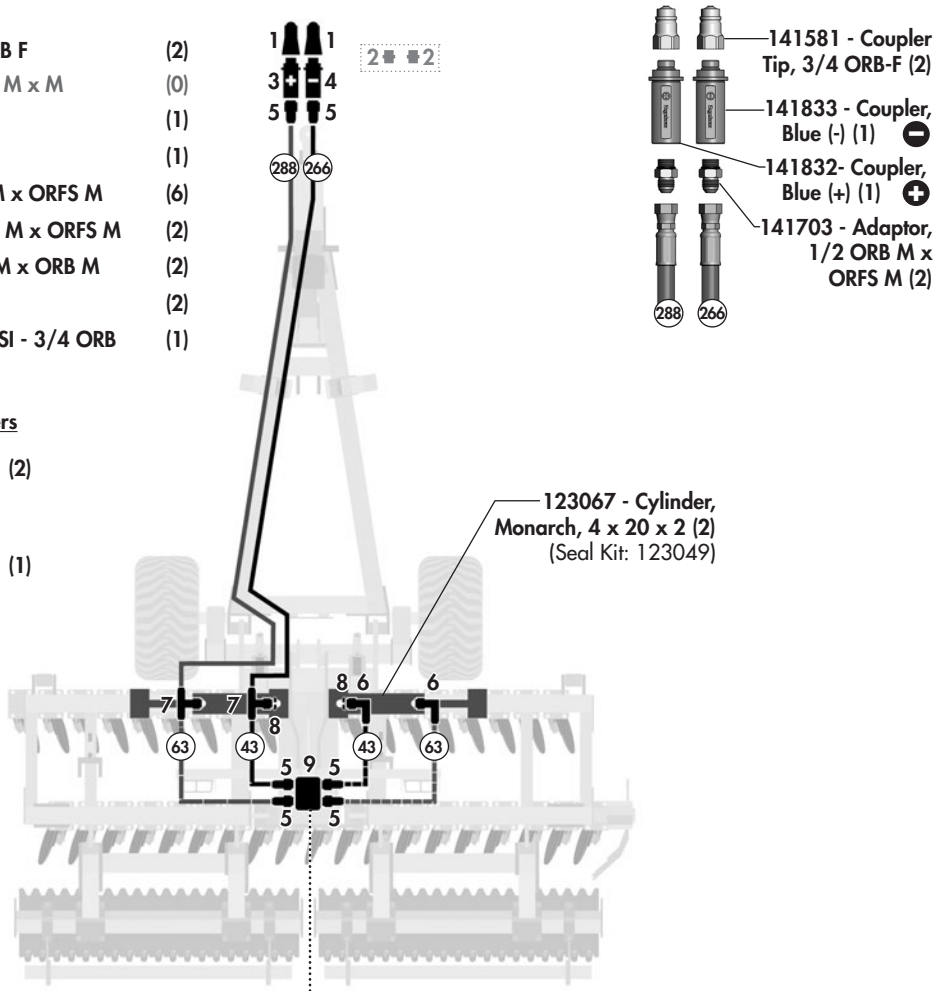

123067 - Cylinder, Monarch - 4 x 20 x 2 (1)

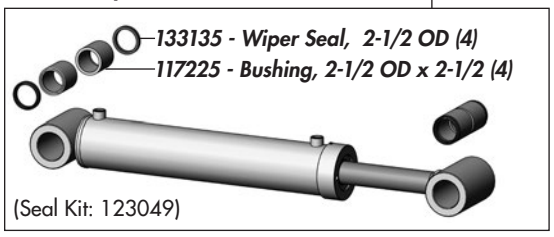

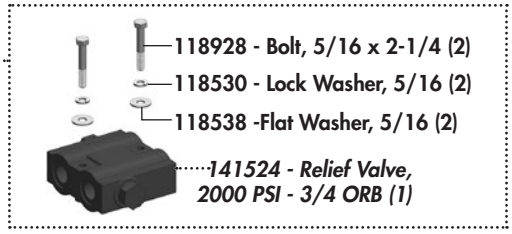

Maintenance Free Pins & Bushings

⚠ **IMPORTANT:** *INSTALL DRY*

Do NOT use any oil/grease/lubricant on pin or bushing surfaces when installing the maintenance free pins into composite bushings.

Hydraulic Layout - 2 - Wings *(Pro-Till 20 Constant Wing Pressure models only)*

(Models without Wing Pressure Kit, see previous page)

Hydraulic Fittings Required

1	141581 - Coupler Tip, 3/4 ORB F	(2)
2	141676 - Connector, 3/4 ORB M x M	(0)
3	141832 - Coupler, Blue (+)	(1)
4	141833 - Coupler, Blue (-)	(1)
5	141703 - Adaptor, 1/2 ORB M x ORFS M	(8)
6	141704 - Elbow, 90° 1/2 ORB M x ORFS M	(2)
7	141707 - Tee, 1/2 ORFS M x M x ORB M	(2)
8	122668 - Orifice, 3/4-16 UNF	(2)
9	141524 - Relief Valve, 2000 PSI - 3/4 ORB	(1)
10	141741 - Pressure Gauge	(1)
11	141727 - Tee, 1/2 ORFS M x F-SW x M	(1)
12	141711 - 90° Elbow, 1/2 ORFS M x 9/16 ORB	(1)
13	141715 - 90° Elbow, 1/2 ORFS M x ORFS F-SW	(1)
14	141740 - Valve, Reducing Relieving	(1)

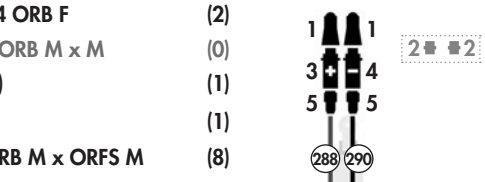

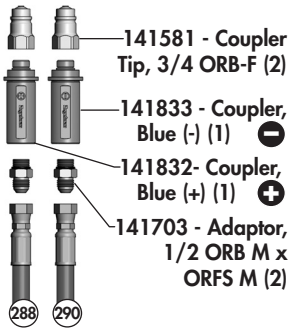

Maintenance Free Pins & Bushings

⚠ IMPORTANT: *INSTALL DRY*

Do NOT use any oil/grease/lubricant on pin or bushing surfaces when installing the maintenance free pins into composite bushings.

Required Hoses for Wing Cylinders

- (26) 126797 - Hose, 3/8 x 26 - 1/2 ORFS F-SW EL (1)
- (43) 126742 - Hose, 3/8 x 43 (2)
- (52) 126796 - Hose, 3/8 x 52 (1)
- (63) 126790 - Hose, 3/8 x 63 - 1/2 ORFS F-SW EL (2)
- (288) 126792 - Hose, 3/8 x 288 - 1/2 ORFS F-SW EL (1)
- (290) 126908 - Hose, 3/8 x 290 (1)

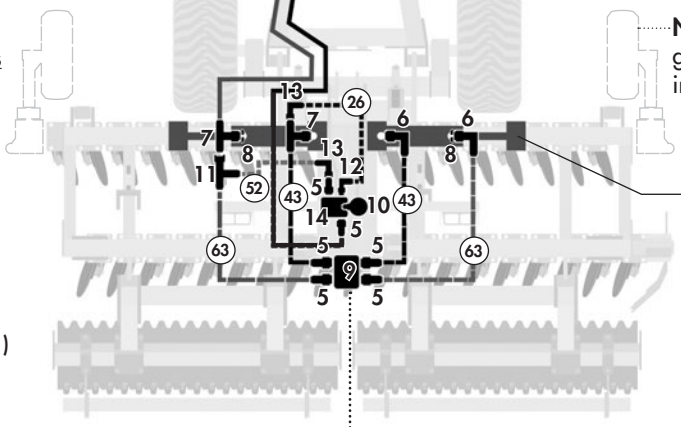

Note: Requires wing gauge wheels to be installed.

123067 - Cylinder, Monarch, 4 x 20 x 2 (2) (Seal Kit: 123049)

123067 - Cylinder, Monarch - 4 x 20 x 2 (1)

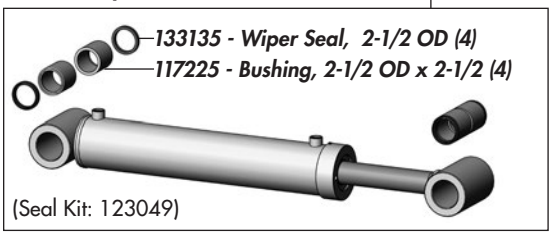

(Seal Kit: 123049)

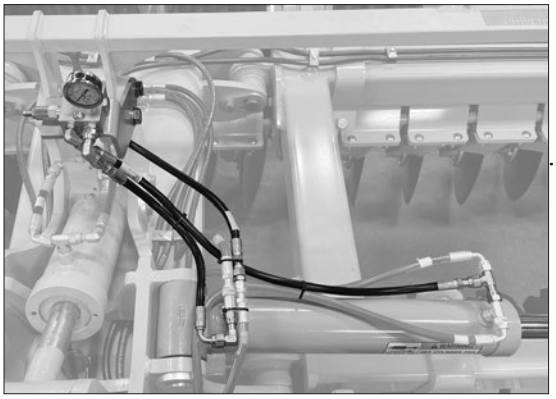

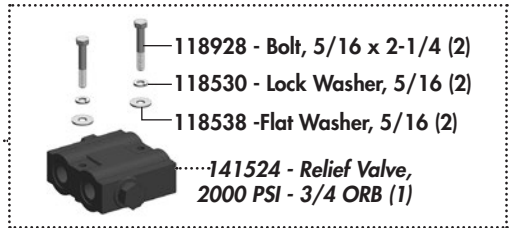

Wing Pressure Bracket Mounting Components

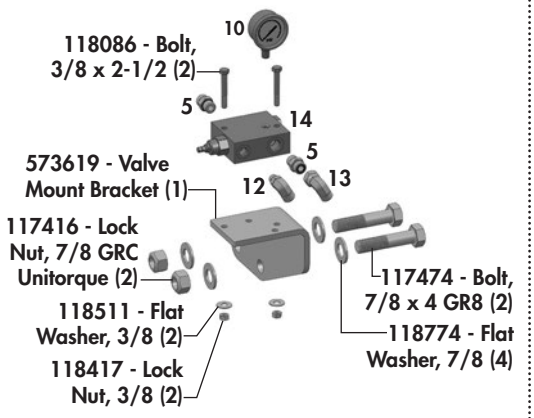

Hydraulic Layout - 3 - Transport

Hydraulic Fittings Required

1	141581 - Coupler Tip, 3/4 ORB F	(2)
2	141676 - Connector, 3/4 ORB M x M	(0)
3	141834 - Coupler, Brown (+)	(1)
4	141835 - Coupler, Brown (-)	(1)
5	141703 - Adaptor, 1/2 ORB M x ORFS M	(2)
6	141704 - Elbow, 90° 1/2 ORB M x ORFS M	(2)

Required Hoses for Transport Cylinders

(148) 126767 - Hose, 3/8 x 148 (1)

(188) 126775 - Hose, 3/8 x 188 (1)

PT 14: *(previous 17)* **123068 - Cylinder, Monarch 5 x 40 x 2-1/2 (1)** (Seal Kit: 123069)

-or-

PT 17/20: 123053 - Cylinder, Monarch 6 x 40 x 2-1/2 (1) (Seal Kit: 123163)

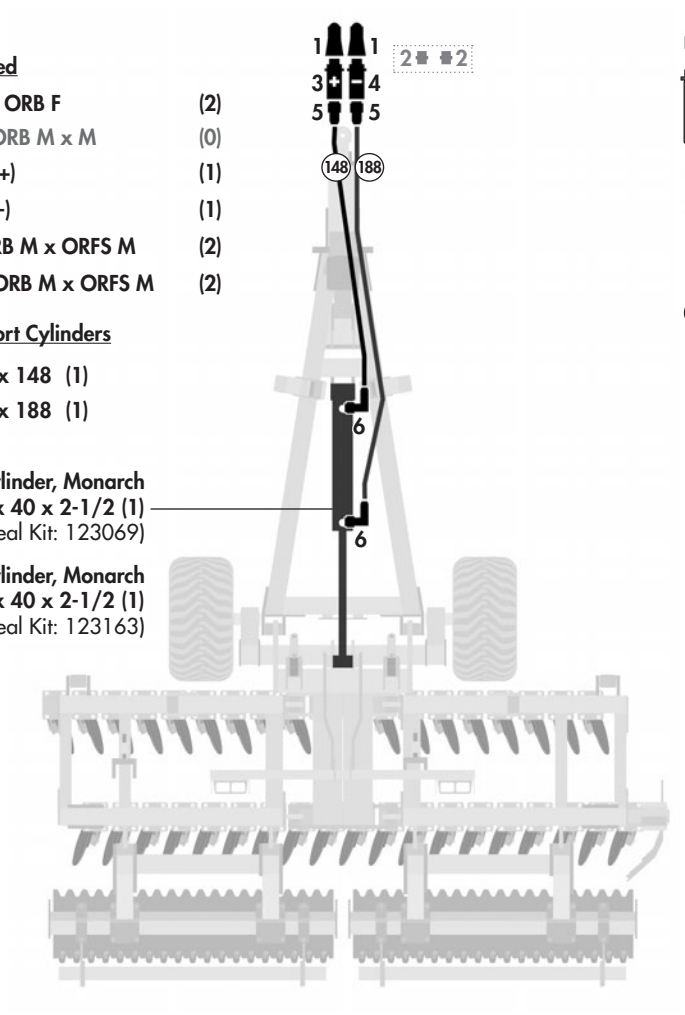

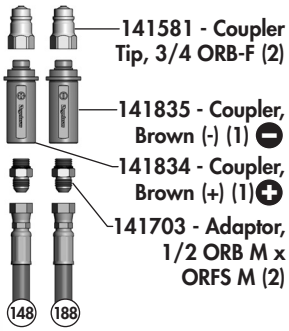

PT 14 *(& previous 17)***:**

123068 - Cylinder, Monarch - 5 x 40 x 2-1/2 (1)

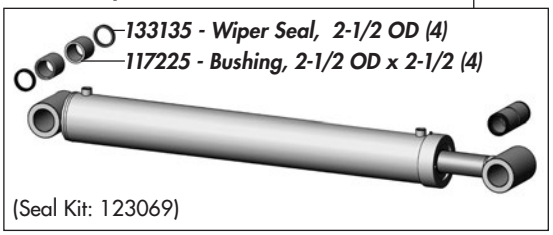

(Seal Kit: 123069)

PT 17/20:

123053 - Cylinder, Monarch - 6 x 40 x 2-1/2 (1)

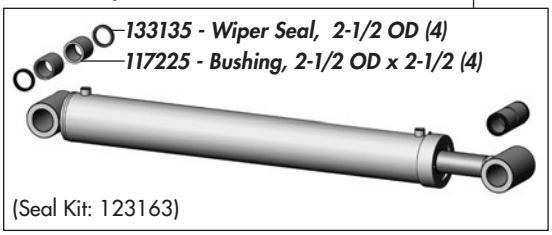

(Seal Kit: 123163)

Maintenance Free Pins & Bushings

⚠ **IMPORTANT:** *INSTALL DRY*

Do NOT use any oil/grease/lubricant on pin or bushing surfaces when installing the maintenance free pins into composite bushings.

Hydraulic Layout - 4 - Jack

Hydraulic Fittings Required

1	141581 - Coupler Tip, 3/4 ORB F	(2)
2	141676 - Connector, 3/4 ORB M x M	(0)
3	141836 - Coupler, Black (+)	(1)
4	141837 - Coupler, Black (-)	(1)
5	141703 - Adaptor, 1/2 ORB M x ORFS M	(4)
6	141704 - Elbow, 90° 1/2 ORB M x ORFS M	(1)
7	141705 - Elbow, 90° 1/2 ORB M x ORFS F-SW	(1)
8	122668 - Orifice, 3/4-16 UNF	(1)
9	141597 - Ball Valve - 3/4 ORB F	(1)

Required Hoses for Jack Cylinder

(110) 126791 - Hose, 3/8 x 112 - 1/2 ORFS F-SW EL (1)

(126) 126748 - Hose, 3/8 x 126 (1)

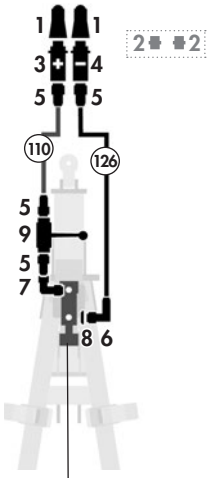

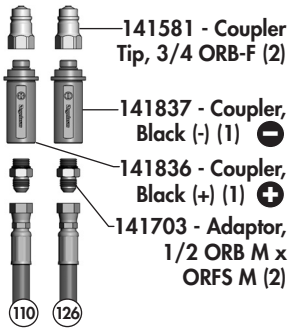

123420 - Cylinder, Monarch - 4-1/2 x 8 x 2 (1)

(For models with SN: PTL7162 & up.)

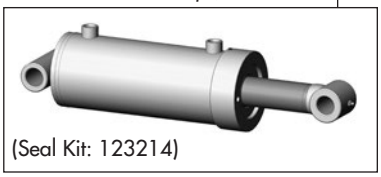

(Seal Kit: 123214)

(Previously Used Cylinder:)

123412 - Cylinder, Monarch - 4 x 8 x 2 (1)

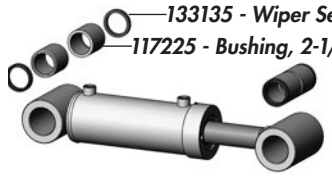

(Seal Kit: 123049)

Maintenance Free Pins & Bushings

⚠ IMPORTANT: *INSTALL DRY*

Do NOT use any oil/grease/lubricant on pin or bushing surfaces when installing the maintenance free pins into composite bushings.

Jack / Ball Valve Connection Detail

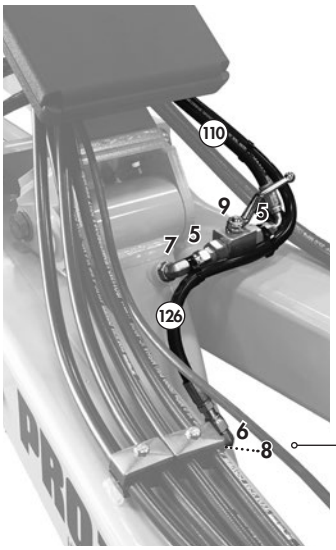

⚠ IMPORTANT:

Close the ball valve to prevent accidental operation of this circuit. Ensure ball valve handle remains in closed position.

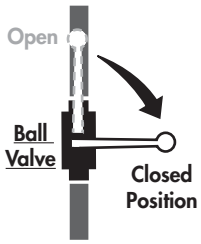

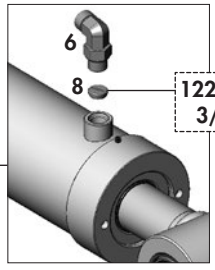

122668 - Orifice, 3/4-16 UNF (1)

Hydraulic Schematic

Reference Number Information

1	**123420 - Cylinder, 4-1/2 x 8 x 2** (Seal Kit 123214)	**(1)**
1b	*Previous*: ***123412 - Cylinder, 4 x 8 x 2*** *(Seal Kit 123049)*	**(1)**
2	**122668 - Orifice, 3/4-16 UNF**	**(3)**
3	**141597 - Ball Valve - 3/4 ORB F**	**(1)**
4	**141581 - Coupler Tip, 3/4 ORB F**	**(8)**
5a	**123068 - Cylinder, 5 x 40 x 2-1/2** (Seal Kit 123069)	**(1)**
5b	**123053 - Cylinder, 6 x 40 x 2-1/2** (Seal Kit 123163)	**(1)**
6	**141740 - Valve, Reducing Relieving**	**(1)**
7	**141741 - Pressure Gauge**	**(1)**
8	**141524 - Relief Valve, 2000 PSI - 3/4 ORB**	**(1)**
9	**141735 - Valve, P.O. Check Valve**	**(1)**
10	**123067 - Cylinder, 4 x 20 x 2** (Seal Kit 123049)	**(2)**
11	**123089 - Cylinder, 4-3/4 x 8 x 2** (Seal Kit 123224)	**(1)**
12	**123178 - Cylinder, 4-1/4 x 8 x 2** (Seal Kit 123046)	**(1)**
13	**123179 - Cylinder, 3-3/4 x 8 x 2** (Seal Kit 123392)	**(1)**

(For models with SN: PTL7162 & up.)

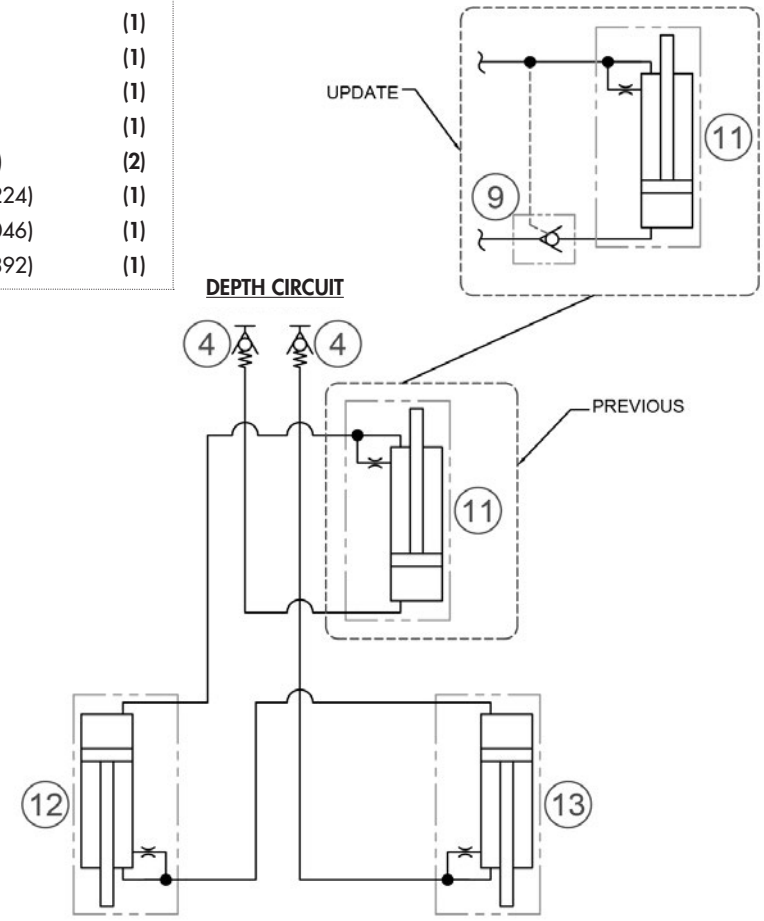

TRANSPORT CIRCUIT

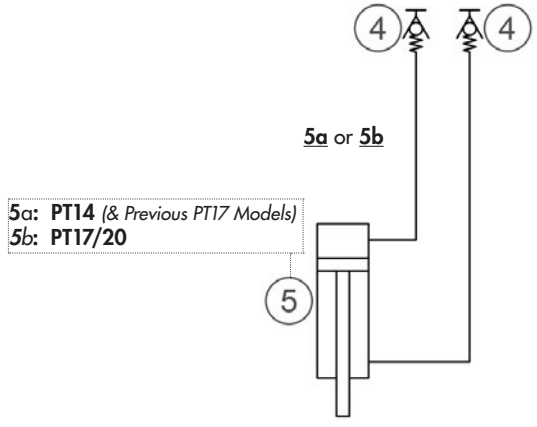

JACK CIRCUIT

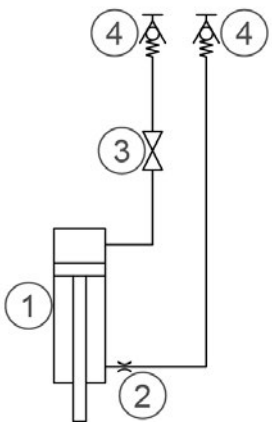

WING CIRCUIT *(PRO-TILL14/17/20)*

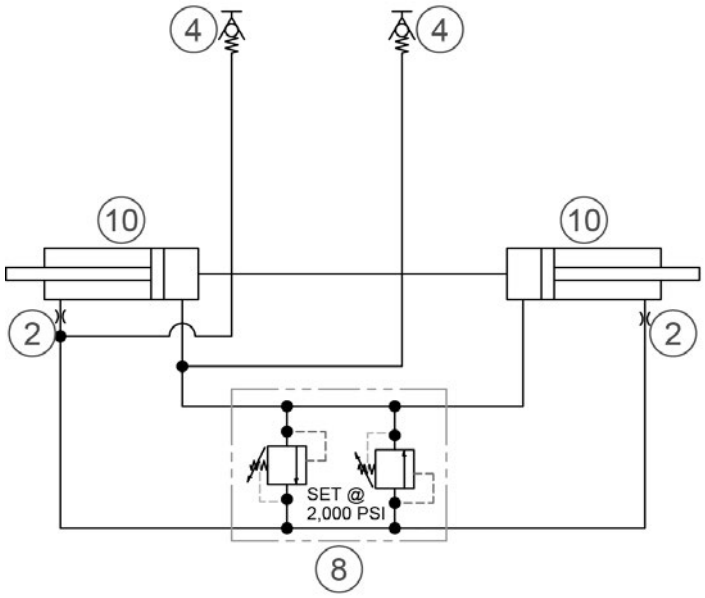

WING CIRCUIT *(PRO-TILL 20 CONSTANT WING PRESSURE MODELS ONLY)*

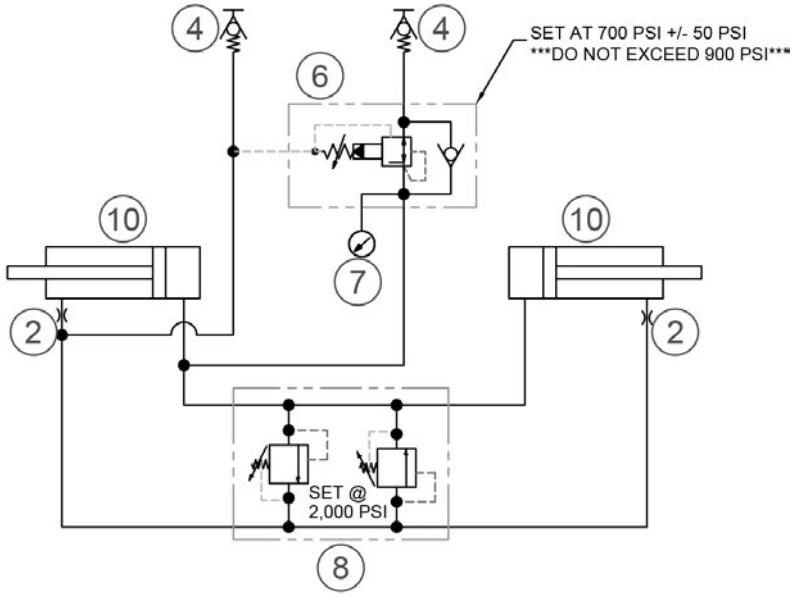

Light Routing - Standard

Dual & Single Amber Wire Routing Overview

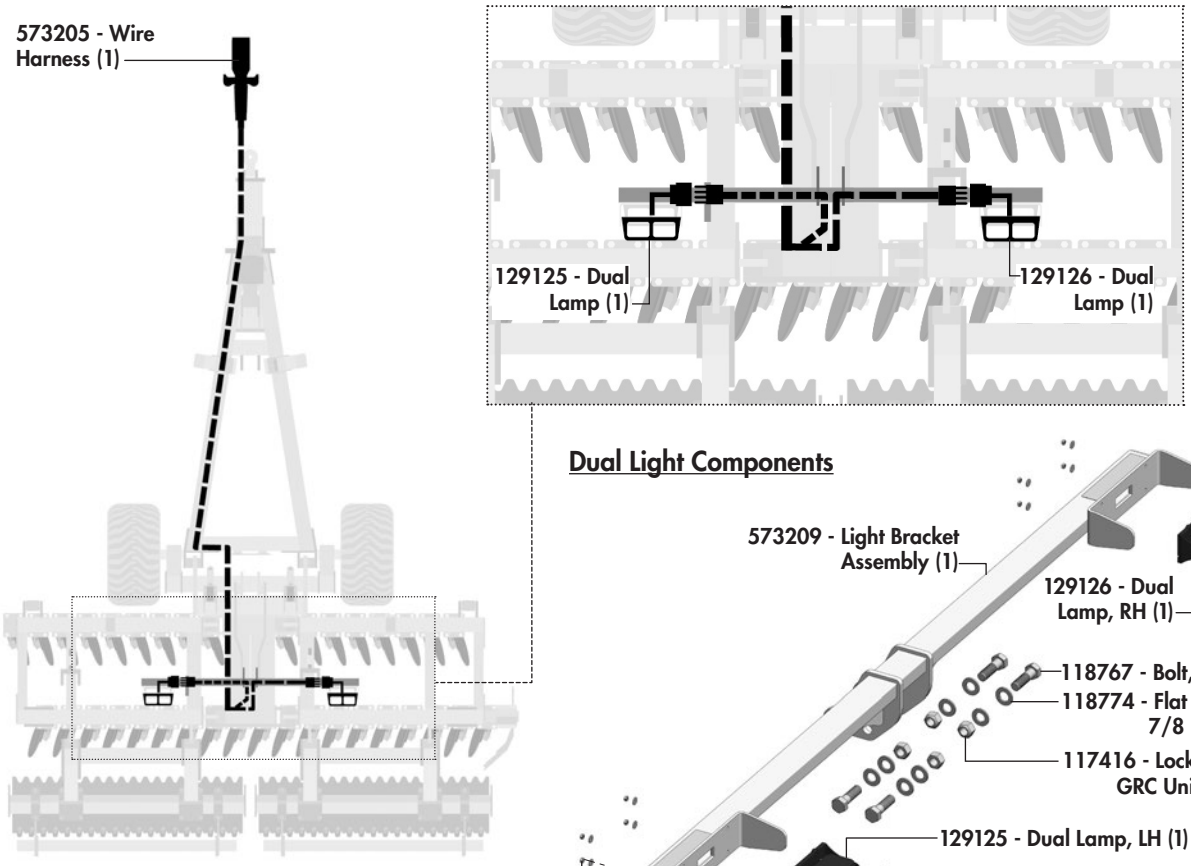

Dual Light Components

Optional Gauge Wheel - Components

Gauge Wheel Components for Pro-Till 20

(RH Shown Below, LH Assembled Opposite)

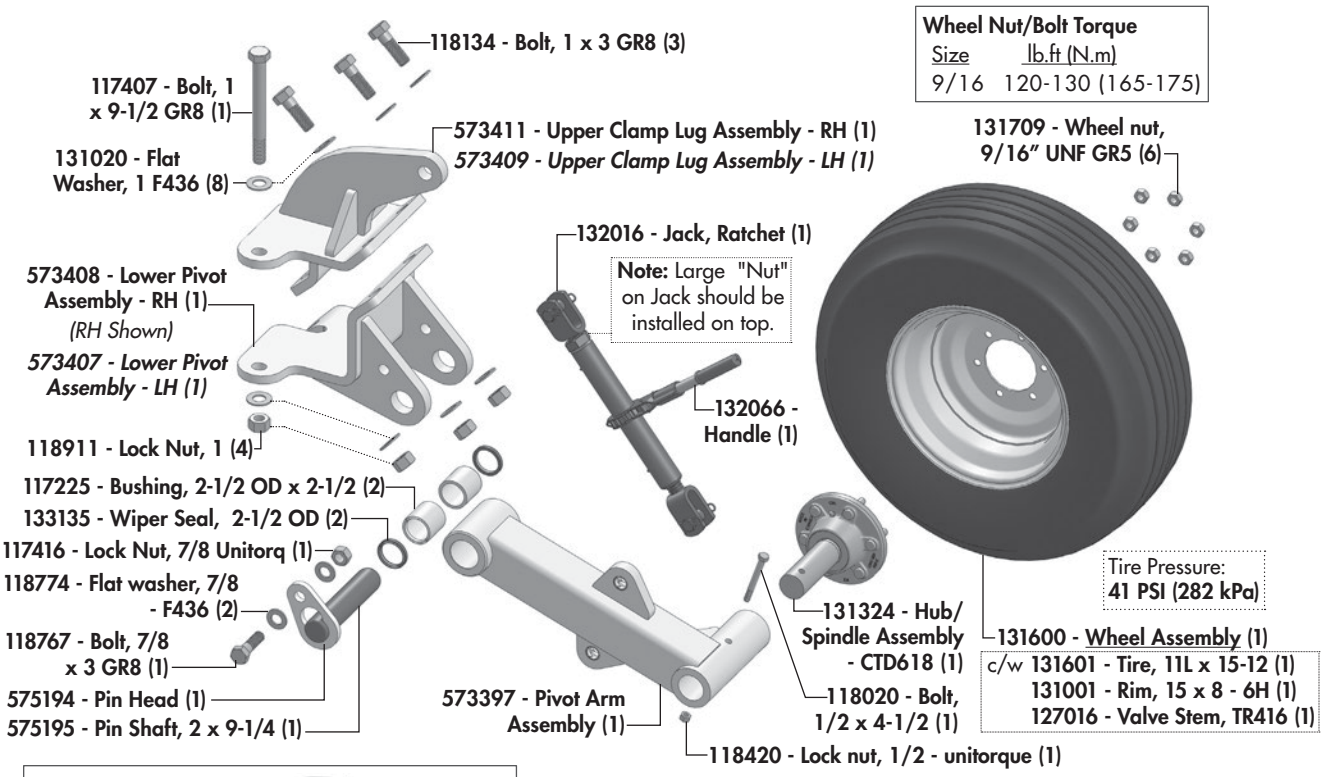

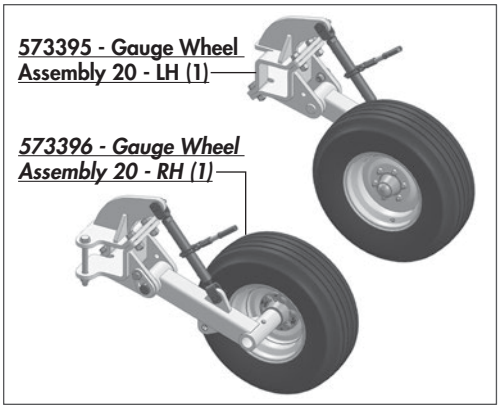

Maintenance Free Pins & Bushings

⚠ IMPORTANT: *INSTALL DRY*

Do NOT use any oil/grease/lubricant on pin or bushing surfaces when installing the maintenance free pins into composite bushings.

131324 - Hub/Spindle Assembly

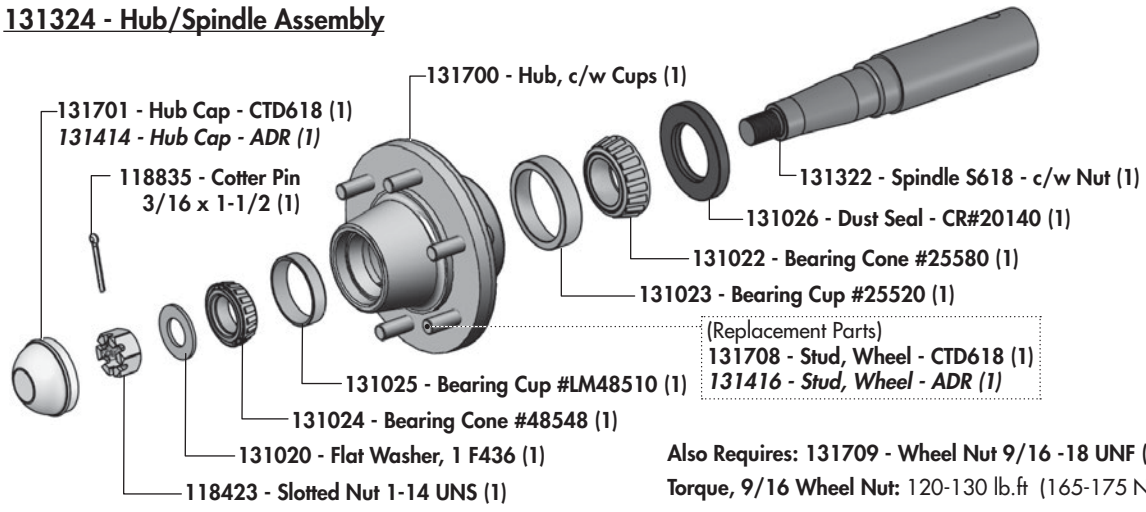

Also Requires: 131709 - Wheel Nut 9/16 -18 UNF (6)

Torque, 9/16 Wheel Nut: 120-130 lb.ft (165-175 N.m)

Optional Gauge Wheel - Settings

Gauge Wheel Frame Location for Pro-Till 20

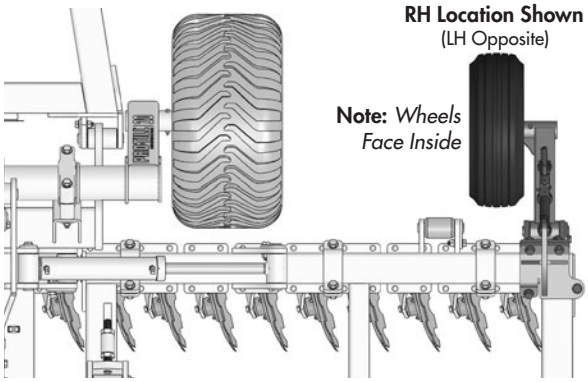

SETTING THE GAUGE WHEEL HEIGHT

Follow this procedure for setting Gauge Wheels:

1. The Pro-Till should be properly adjusted to the desired disc working depth first *(gauge wheels raised off ground).* Then run a test strip with the gauge wheels not touching the ground. When satisfied with the depth, proceed to next step.
2. Using the ratchet jack, lower the gauge wheel until it just touches the soil, then go 1-1/2 to 2 extra rotations -or- to the point where it's putting enough down pressure to take some weight off the wing or just start lifting the wing.

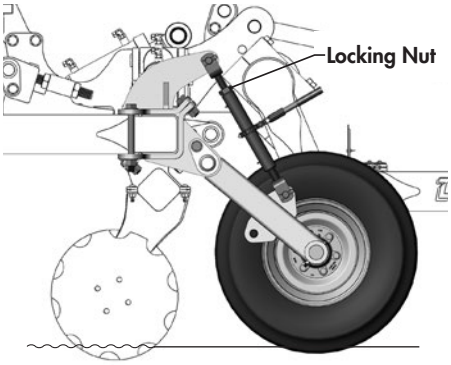

3. Lock the ratchet jack in place with large jack nut.
4. Test and re-adjust if necessary.

Machine Depth Change

Note: If a machine depth change is required you can usually adjust up or down ***1 Depth Stop*** without having to adjust gauge wheels.

If you adjust ***2 or more Depth Stops*** re-adjusting the gauge wheel will be necessary. Follow the above procedure.

2 Year

Limited Warranty - Agricultural Products

Degelman Industries LP ("Degelman") warrants to the original purchaser of any new Degelman equipment, purchased from an authorized Degelman dealer, that the equipment will be free from defects in material and workmanship for a period of two (2) years from the date of delivery, for non-commercial use (including farm, institutional, government, and municipality) and (1) year from the date of delivery for commercial use. The obligation of Degelman to the purchaser under this warranty is limited to the repair or replacement of defective parts in the first year and to the provision, but not the installation of replacement parts in the second year. Degelman reserves the right to inspect any equipment or parts which are claimed to have been defective in material or workmanship.

This warranty limits its replacement or repair coverage to what is consistent with the warranty of Degelman's suppliers of purchased components.

Replacement or repair parts installed in the equipment covered by this limited warranty are warranted for ninety (90) days from the date of delivery of such part or the expiration of the applicable new equipment warranty period, which ever occurs later. Warranted parts shall be provided at no cost to the user at an authorized Degelman dealer during regular working hours. Warranted replacement parts will either be replaced or rebuilt at Degelman's discretion.

Disclaimer of implied warranties & consequential damages

This warranty shall not be interpreted to render Degelman Industries LP liable for injury, death, property damage or damages of any kind, whether direct, consequential, or contingent to property. Without limiting the generality of the foregoing, Degelman shall not be liable for damages resulting from any cause beyond its reasonable control, including, without limitation, loss of crops, any expense or loss of labour, supplies, rental machinery or loss of use.

No other warranty of any kind whatsoever, express or implied is made with respect to this sale; and all implied warranties of merchantability and fitness for a particular purpose which exceed the obligations set forth in this written warranty are hereby disclaimed and excluded from this sale. This exclusion shall not apply in any jurisdiction where it is not permitted by law.

This limited warranty shall not apply:

1. If, in the sole opinion of Degelman, the unit has been subjected to misapplication, abuse, misuse, negligence accident or incorrect off-site machine set-up.
2. To any goods that have sustained damage or deterioration attributable to a lack of routine maintenance (eg. Check and Re-torque of fastening hardware, Hydraulic fluid purities, drive train alignments, and clutch operation)
3. If parts not made or supplied by Degelman have been used in the connection with the unit, if, in the sole judgement of Degelman such use affects its performance, safety, stability or reliability.
4. If the unit has been altered or repaired outside of an authorized Degelman dealership in a manner which, in the sole judgement of Degelman, affects its performance, safety, stability or reliability.
5. To expendable or wear items such as (eg. Harrow tines, Rock Picker and Rock Rake wear teeth and replaceable bushings and pins.) and any other items that in the company's sole judgement are a wear item.

No employee or representative of Degelman Industries LP is authorized to change this limited warranty in any way or grant any other warranty unless such change is made in writing and signed by the Degelman Service Manager.

This limited warranty is subject to any future availability of supply, which may directly affect Degelman's ability to obtain materials or manufacture replacement parts.

Degelman reserves the right to make improvements in design or changes in specifications at any time, without incurring obligations to owners of equipment previously delivered.

This limited warranty is subject to compliance by the customer to the enclosed *Retail Customer's Responsibility Under Degelman Warranty.*

Warranty

Retail Customer's Responsibility Under Degelman Warranty.

It is the retail customer and/or Operator's responsibility to read the Operator's Manual, to operate, lubricate, maintain and store the equipment in accordance with all instructions and safety procedures. Failure of the operator to read the operators manual is a misuse of this equipment.

It is the retail customer and/or operators responsibility to inspect the product and to have any part(s) repaired or replaced when continued operation would cause damage or excessive wear to other parts or cause safety hazard.

It is the retail customer's responsibility to deliver the product to the authorized Degelman dealer, from whom he purchased it, for service or replacement of defective parts, which are covered by warranty. Repairs to be submitted for warranty consideration must be made within forty-five days of failure.

It is the Retail Customer's responsibility for any cost incurred by the dealer for hauling of the product for the purpose of performing a warranty obligation or inspection.

WARRANTY INFORMATION

Make certain the warranty registration card has been forwarded to:

Degelman Industries LP
Box 830 -272 Industrial Dr.
Regina, SK, Canada
S4P 3B1

Always give your dealer the serial number of your Degelman product when ordering parts or requesting service or other information.

The serial number is located on the machine as shown in the diagram below. In the space provided record the model number, the serial number and the date of purchase to assist your dealer in providing you with prompt and efficient service.

SERIAL NUMBER: _____

MODEL NUMBER: _____

DATE OF PURCHASE: _____





© 2026 Degelman Industries LP