Degelman

OPERATOR & PARTS MANUAL

PRO-TILL®
HIGH PERFORMANCE TILLAGE

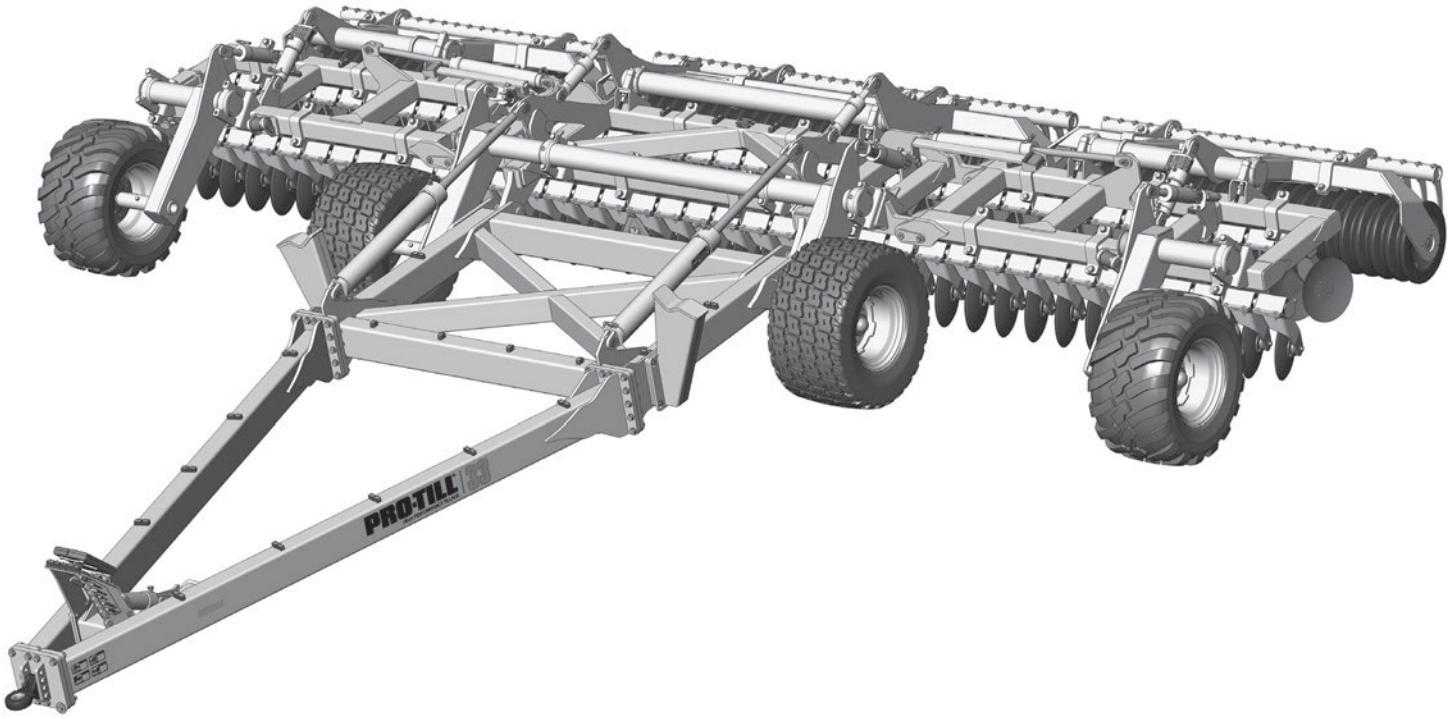

PRO-TILL® 33 HIGH PERFORMANCE TILLAGE

PRO-TILL® 40 HIGH PERFORMANCE TILLAGE

143368 v1.8

DEGELMAN INDUSTRIES LP
BOX 830-272 INDUSTRIAL DRIVE,
REGINA, SK, CANADA, S4P 3B1
FAX 306.543.2140 PH 306.543.4447
1.800.667.3545 DEGELMAN.COM

PRO-TILL 33/40 & PRO-TILL 40 (Controlled Traffic)

Serial Numbers: 1728 to 6593

QUICK-START GUIDE*
for PRO-TILL 33/40

* Refer to operators manual for complete safety and operation info.

REMEMBER! You must complete Product Registration to be eligible for Warranty.

Degelman

A Connect Hydraulics

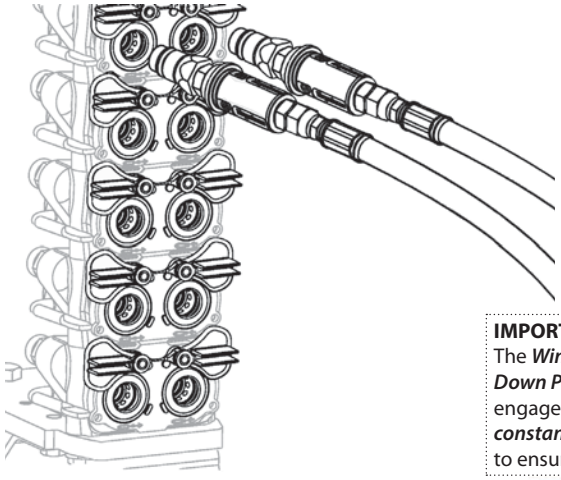

1. WHEELS
2. ROLLERS
3. TRANSPORT
4. WINGS
5. JACK

Standard Configuration Models	Models with *Wing Pressure Kit*
FLOAT -OR-	CONSTANT PRESSURE

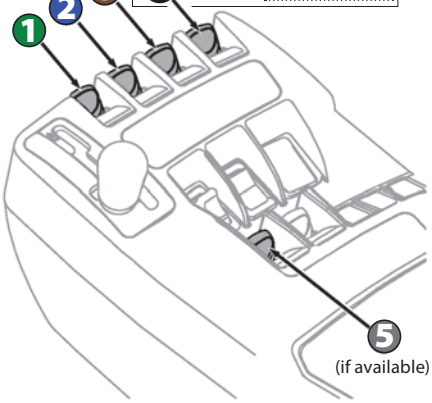

IMPORTANT: *Models with Wing Pressure Kit*
The ***Wing Cylinder Circuit*** includes a ***Down Pressure Valve***. Operator must engage wing circuit hydraulics ***constantly*** in the extended direction to ensure constant down pressure.



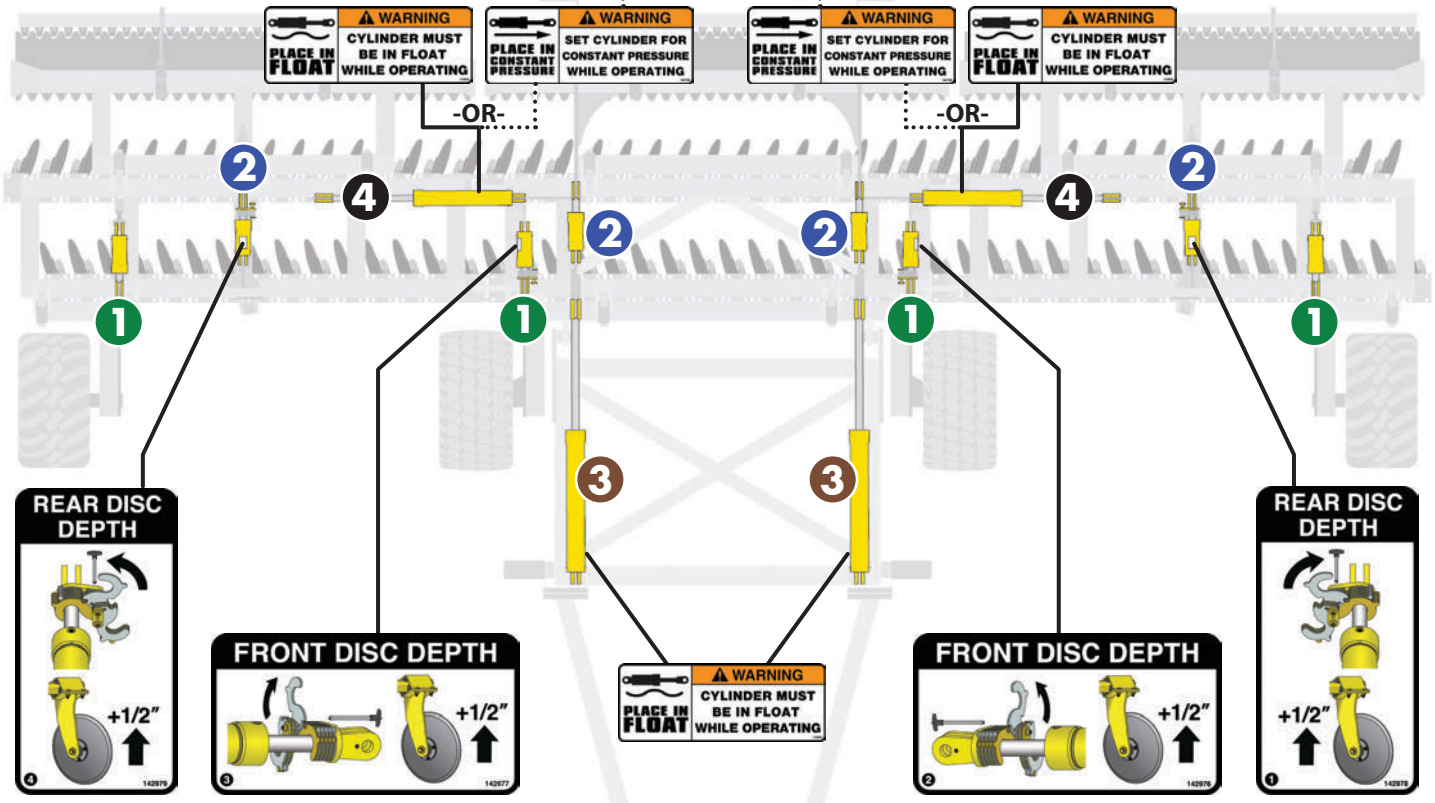

Maintenance
(Check Machine Daily)

Grease Points

- Front Frame / Rockshaft Pins
- Wing Frame Pins
- Cylinder Pins
- Wing Transport Roller Pins
- Hubs & Spindles
- Working points & pins

GPS Reference
(Set overlap to 6" per side)

(with 20" discs)	2" Depth
Pro-Till 33	390" (9.9m)
Pro-Till 40	470" (11.9m)
Pro-Till 40 CT	491" (12.4m)
(with 20" discs)	MAX Depth
Pro-Till 33	393" (10m)
Pro-Till 40	473" (12m)
Pro-Till 40 CT	493" (12.5m)

(Consider setting the GPS to include a 6" implement offset to the right)

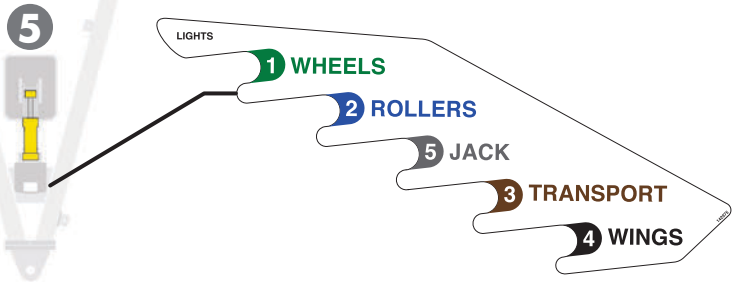

* Refer to operators manual for complete safety and operation info.

B Put in Field Position

i)



ii)

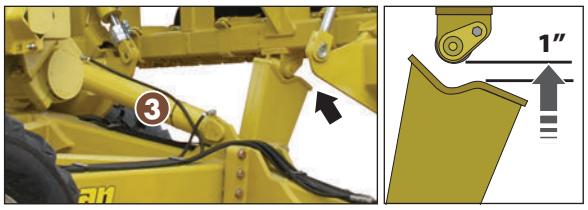

iii)

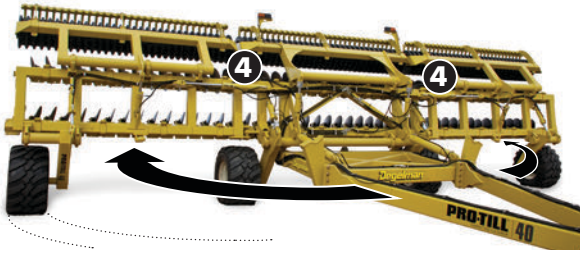

iv)

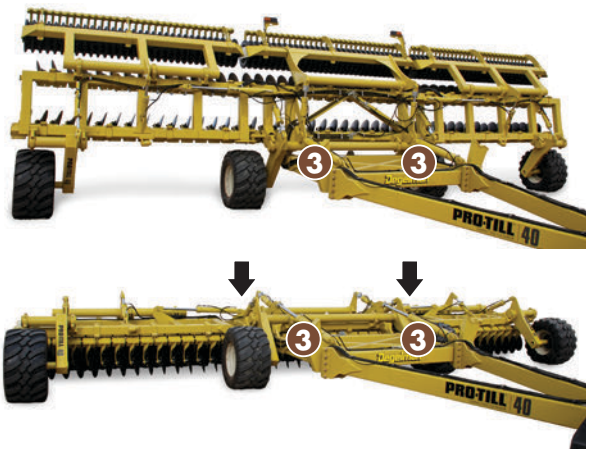

v)





Standard Configuration

-OR-



Models that have a ***Wing Pressure Kit*** installed

IMPORTANT: Operator **must** read and understand the tractor manual in order to place the required hydraulic circuits into **float position** or **constant pressure position**.

C Set Cutting Depth

IMPORTANT: Re-phase and cycle oil in the Depth Control Cylinders 1 2 before use. This is especially important after long periods of storage.

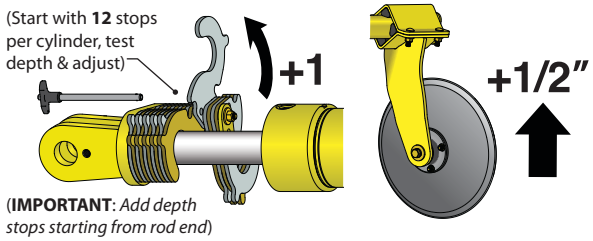

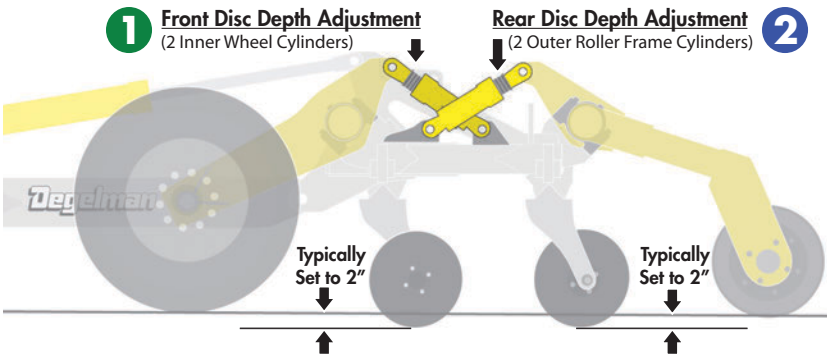

D Test. Check. Adjust.

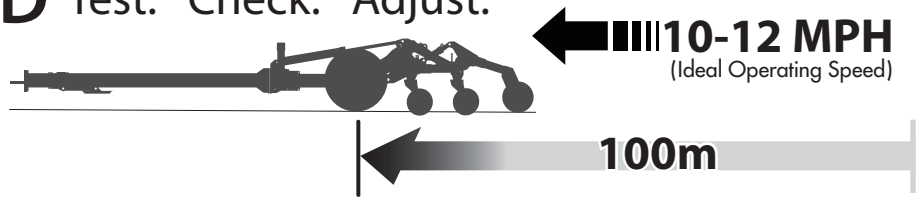

E Lower 1 Wheels for Headland Turns.

F ⚠ **MAX** Transport Speed: **40 km/h (25 MPH)**

Scraper Position Overview (Rubber Rollers)

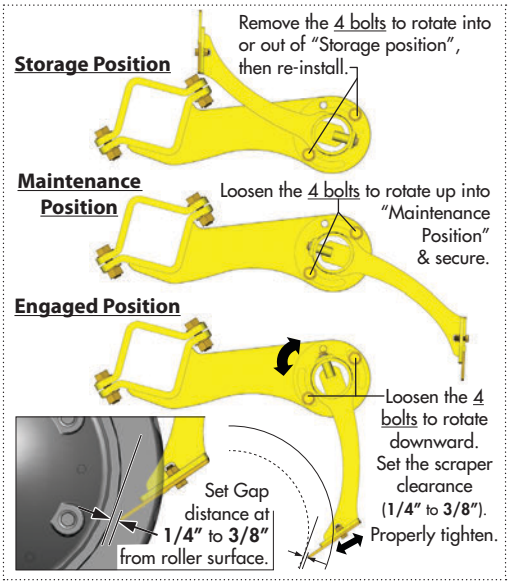

UNLOADING GUIDELINES - Lowboy Trailer

1. Position trailer on level ground with lots of room on the unloading side for unloading and driving unit of trailer.
2. Use appropriate forklifts to unload front "A" frame hitch, hardware container, and unloading ramps from trailer.
3. Position the four unloading ramps on unloading side of trailer at each tire location.
4. Position tractor near but to the side of the raised hitch frame on the main assembly. Connect the hoses for the two main transport cylinders (#4) and lower the hitch frame.
5. Position and support the front "A" frame hitch in front of the lower frame section. Use the 1" x 4-1/2" GR8 bolts and hardware from the shipping container to re-attach the frame sections.
   Torque as required: 770 lb.ft (1050 N.m)
6. Re-route, secure and connect all hydraulic hoses and wiring onto the main frame.
7. Hook up to an appropriately sized tractor and properly secure with clevis hitch and safety chain.

⚠ DANGER:
NEGATIVE TONGUE WEIGHT/ TIP OVER HAZARD

• Make certain that machine is securely hitched to the tractor at all times. An unhitched machine can tip over backwards during folding and unfolding if the tongue is not properly secured.



8. Ensure the four loading ramps are properly positioned in front of the four tires.
9. Connect hydraulics to tractor. Slightly retract the transport hydraulic cylinders, just enough to raise disc sections and rollers to clear trailer deck while unloading. Do not fully lift rear sections.
10. Clear the area of any people and equipment. Slowly and safely drive unit forward off trailer.
11. Rotate the Ridge Wiper assemblies located in-between the rollers and re-secure in proper position. (*Refer to Manual for proper adjustments.*)
12. If Pro-Till is equipped with Rubber Rollers, the "Scraper Assemblies" may be shipped unattached and will need to be installed onto the rear roller frames.



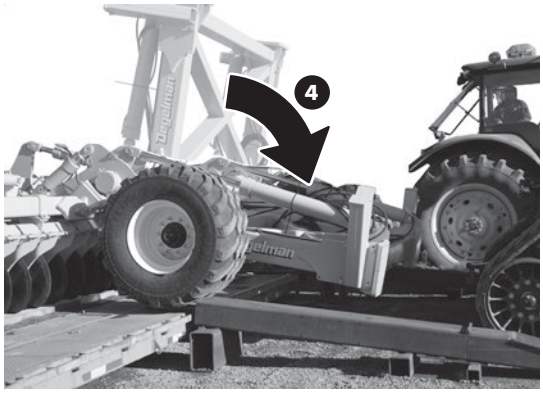

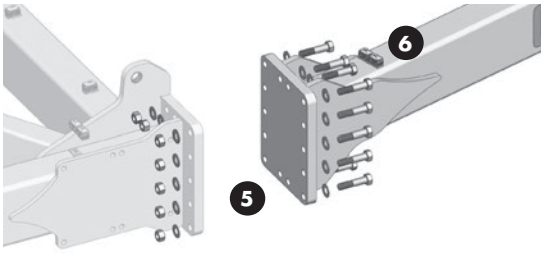

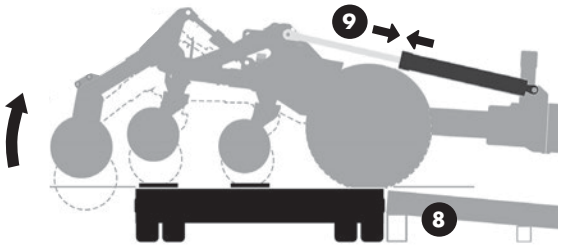

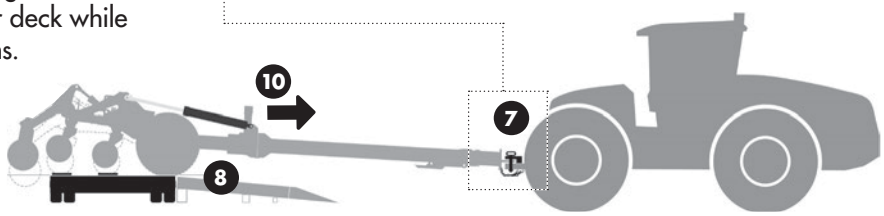

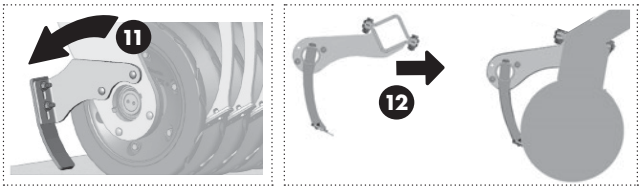

UNLOADING GUIDLINES - Flatbed Truck

The weight of the Pro-Till is over 30,000 lbs.

Any lifting of the Pro-Till main assembly during loading or unloading must be accomplished using an overhead crane capable of safely lifting the unit at the designated secure lift locations.

1. To lift the Pro-Till main assembly, the unit must be secured at several designated lift locations. The following images will help show the appropriate areas for lifting.
2. ⚠ Ensure assembly is level while being lifted. Wing sections must be lifted level with center section to avoid any damage to wing cylinders.

Step 4 - 12: Refer to same steps/images on opposite page

4. After lowering to ground, position a tractor near, but to the side of, the raised hitch frame on the main assembly. Connect the hoses for the two main transport cylinders (#4) and lower the hitch frame.
5. Position and support the front "A" frame hitch in front of the lower frame section. Use the 1" x 4-1/2" GR8 bolts and hardware from the shipping container to re-attach the frame sections.
   Torque as required: 770 lb.ft (1050 N.m)
6. Re-route, secure and connect all hydraulic hoses and wiring onto the main frame.

11. Rotate the Ridge Wiper assemblies located in-between the rollers and re-secure in proper position. (*Refer to Manual for proper adjustments.*)
12. If Pro-Till is equipped with Rubber Rollers, the "Scraper Assemblies" may be shipped unattached and will need to be installed onto the rear roller frames.

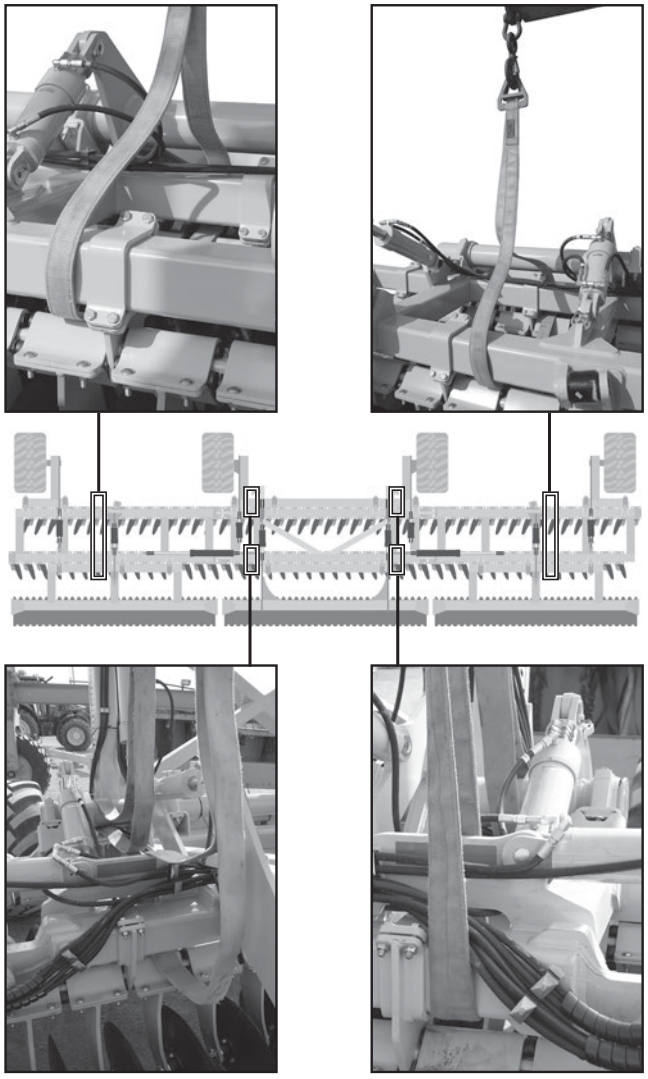





Degelman

PRO-TILL®

HIGH PERFORMANCE TILLAGE

** Reference Sheet Quick-Start Guide / Unloading Instructions*

OPERATORS SECTION - TABLE OF CONTENTS

IMPORTANT Safety Notice	
Introduction	***1***
Safety	***2***
Hook-Up	***4***
Transport	***5***
Transport to Field Position	*6*
Field to Transport Position	*7*
Operation	***8***
Pre-Operation Checklist	*8*
Operation Guidelines / Suggestions	*9*
Setting Disc Depth	*10*
Scraper Settings	*11*
Adjustments: Rephasing Cylinders	*12*
Adjustments: Wing Down Pressure	*13*
Troubleshooting	***14***
Service & Maintenance	***16***
Maintenance Checklist	*16*
Repair - Wheel Hub	*17*
Repair - Hydraulic Cylinder	*20*

PARTS SECTION - TABLE OF CONTENTS

Pro-Till Section Overview	*23*
Hitch Pole & Front Frame Components	*24*
Wheel & Rockshaft Components	*26*
Center & Wing Frame Components	*27*
Roller Assembly Components	*31*
Scraper Components	*32*
Disc Gang Assembly & Components	*33*
Disc Arm Components & Disc Options	*36*
Hydraulic Cylinders	*37*
Hydraulic Routing	*38*
Dirt Deflector Components & Adjustments	*46*
Light Electrical Routing & Components	*48*
Warranty	***50***

DEGELMAN INDUSTRIES LP
BOX 830-272 INDUSTRIAL DRIVE,
REGINA, SK, CANADA, S4P 3B1
FAX 306.543.2140 PH 306.543.4447
1.800.667.3545 DEGELMAN.COM

⚠ IMPORTANT:



READ MANUAL

Degelman

IMPORTANT SAFETY REMINDER

⚠ DANGER - NEVER PARK, UNHOOK, or SERVICE Pro-Till with REAR WINGS *RAISED*

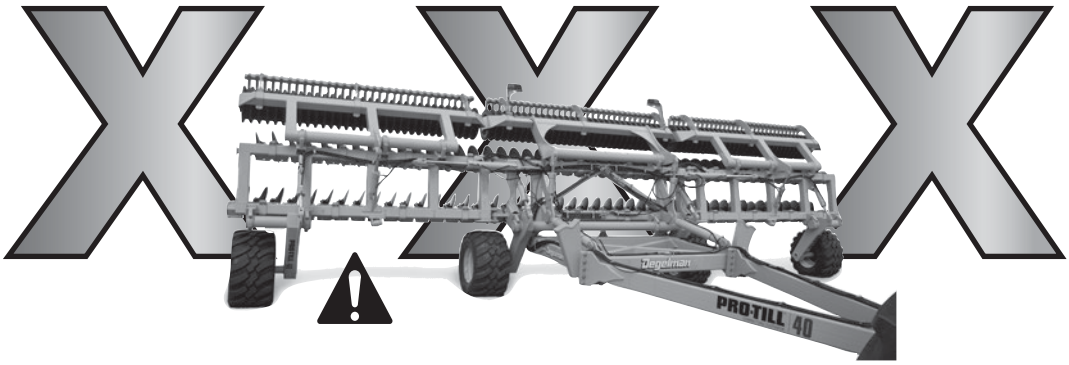



⚠ DANGER

If the front hitch becomes disconnected in this position the front hitch will raise suddenly and the back of the machine will drop!

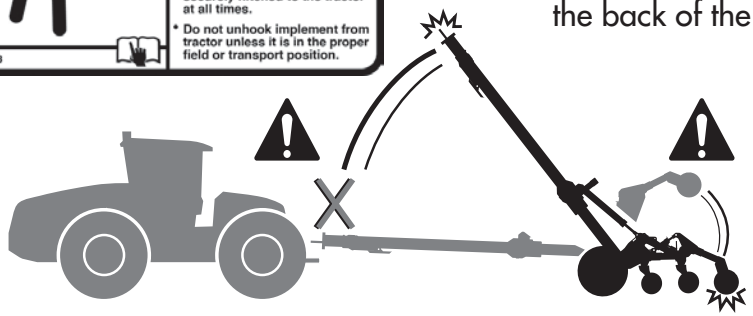



PRO-TILL®
HIGH PERFORMANCE TILLAGE

CHANGING DISCS AND SERVICING

The best position to safely change or service the discs on the Pro-Till is when it is secured in the winged forward transport position.



Introduction

PRO-TILL®
HIGH PERFORMANCE TILLAGE

CONGRATULATIONS on your choice of a Degelman PRO-TILL to complement your farming operation. It has been designed and manufactured to meet the needs of a discerning agricultural market. Degelman PRO-TILL shreds heavy fall residue, opens up spring fields, levels ruts, destroys clods and produces an absolutely perfect seed bed. Degelman PRO-TILL is the fastest and most versatile piece of tillage equipment you will ever own. Use this manual as your first source of information about this machine.

TO THE NEW OPERATOR OR OWNER - Safe, efficient and trouble free operation of your Degelman PRO-TILL requires that you and anyone else who will be operating or maintaining it, read and understand the Safety, Operation, Maintenance and Troubleshooting information contained within this manual.

By following the operating instructions in conjunction with a good maintenance program your machine will provide many years of trouble-free service. Keep this manual handy for frequent reference and to pass on to new operators or owners. Call your Degelman Dealer if you need assistance, information, or additional copies of the manual.

OPERATOR ORIENTATION - The directions left, right, front and rear, as mentioned throughout the manual, are as seen from the tractor drivers' seat and facing in the direction of travel.

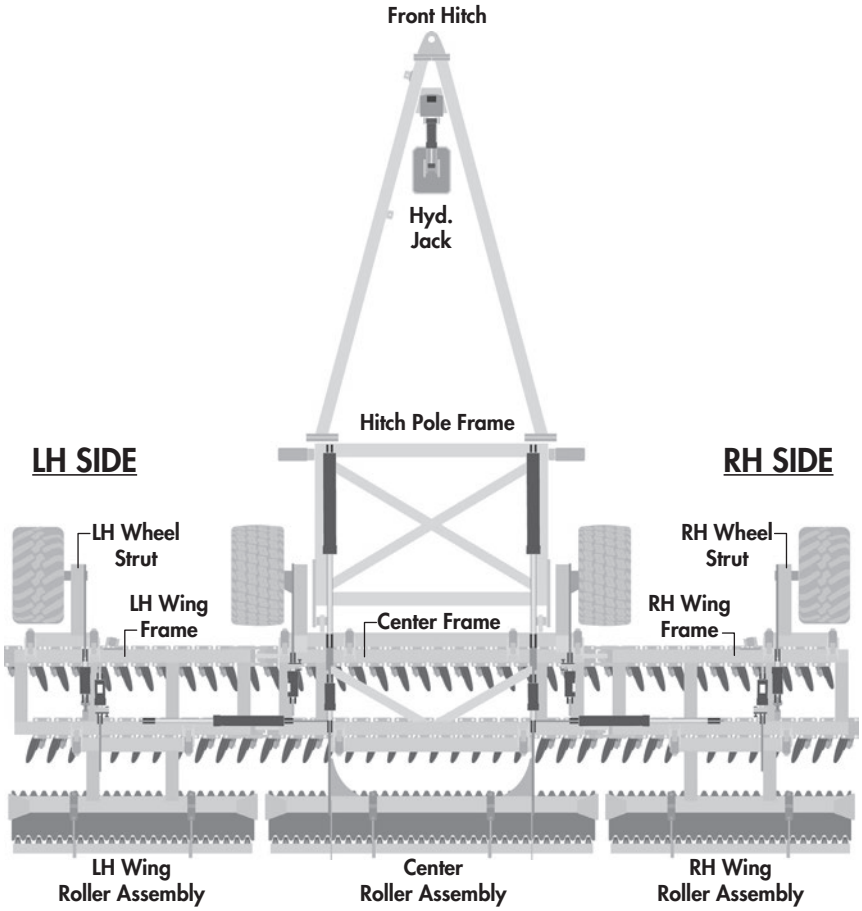

PRO-TILL® 33
HIGH PERFORMANCE TILLAGE

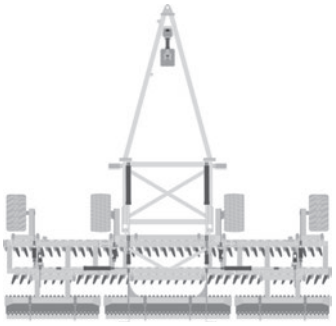

PRO-TILL® 40
HIGH PERFORMANCE TILLAGE

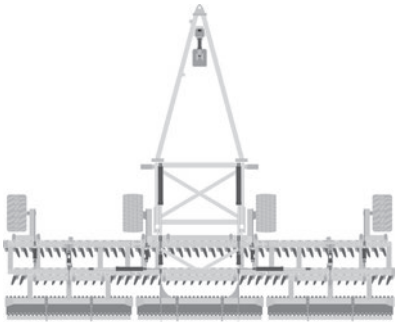

Why is SAFETY important to YOU?

3 **BIG** Reasons:

- Accidents Can Disable and Kill
- Accidents Are Costly
- Accidents Can Be Avoided



SAFETY ALERT SYMBOL

The **Safety Alert Symbol** identifies important safety messages applied to the PRO-TILL and in this manual. When you see this symbol, be alert to the possibility of **injury or death**. Follow the instructions provided on the safety messages.

The **Safety Alert Symbol** means:

ATTENTION!
BECOME ALERT!
YOUR SAFETY IS INVOLVED!

SIGNAL WORDS

Note the use of the Signal Words: **DANGER**, **WARNING**, and **CAUTION** with the safety messages. The appropriate Signal Word has been selected using the following guidelines:

DANGER

DANGER: Indicates an imminently hazardous situation that, if not avoided, **WILL** result in death or serious injury if proper precautions are not taken.

WARNING

WARNING: Indicates a potentially hazardous situation that, if not avoided, **COULD** result in death or serious injury if proper precautions are not taken.

CAUTION

CAUTION: Indicates a potentially hazardous situation that, if not avoided, **MAY** result in minor or moderate injury if proper practices are not taken, or, serves as a reminder to follow appropriate safety practices.

SAFETY

YOU are responsible for the safe operation and maintenance of your Degelman PRO-TILL. **YOU** must ensure that you and anyone else who is going to operate, maintain or work around the PRO-TILL be familiar with the operating and maintenance procedures and related **SAFETY** information contained in this manual. This manual will take you step-by-step through your working day and alerts you to all good safety practices that should be adhered to while operating this equipment.

Remember, **YOU** are the key to safety. Good safety practices not only protect you but also the people around you. Make these practices a working part of your safety program. Be certain that **EVERYONE** operating this equipment is familiar with the recommended operating and maintenance procedures and follows all the safety precautions. Most accidents can be prevented. Do not risk injury or death by ignoring good safety practices.

- PRO-TILL owners must give operating instructions to operators or employees before allowing them to operate the PRO-TILL, and at least annually thereafter per OSHA regulation 1928.51.
- The most important safety device on this equipment is a SAFE operator. It is the operator's responsibility to read and understand ALL Safety and Operating instructions in the manual and to follow these. All accidents can be avoided.
- A person who has not read and understood all operating and safety instructions is not qualified to operate the machine. An untrained operator exposes himself and bystanders to possible serious injury or death.
- Do not modify the equipment in any way. Unauthorized modification may impair the function and/or safety and could affect the life of the equipment.
- Think SAFETY! Work SAFELY!

GENERAL SAFETY

1. Read and understand the Operator's Manual and all safety signs before operating, maintaining or adjusting.



2. Install and properly secure all shields and guards before operating. Use hitch pin with a mechanical locking device.
3. Have a first-aid kit available for use should the need arise and know how to use it.



4. Have a fire extinguisher available for use should the need arise and know how to use it.



5. Wear appropriate protective gear. This list includes but is not limited to:
   - A hard hat
   - Protective shoes with slip resistant soles
   - Protective glasses or goggles
   - Heavy gloves
   - Wet weather gear
   - Hearing protection
   - Respirator or filter mask

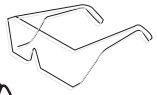



6. Clear the area of people, especially small children, and remove foreign objects from the machine before starting and operating.
7. Do not allow riders.
8. Stop tractor engine, set park brake, remove ignition key and wait for all moving parts to stop before servicing, adjusting, repairing or unplugging.
9. Review safety related items with all operators annually.

HOOK-UP / UNHOOKING

The PRO-TILL should always be parked on a level, dry area that is free of debris and foreign objects. Follow this procedure to hook-up:

1. Clear the area of bystanders and remove foreign objects from the machine and working area.
2. Make sure there is enough room to back the tractor up to the trailer hitch.
3. Start the tractor and slowly back it up to the hitch point.
4. Connect the hydraulics. To connect, proceed as follows:
   - Use a clean cloth or paper towel to clean the couplers on the ends of the hoses. Also clean the area around the couplers on the tractor. Remove the plastic plugs from the couplers and insert the male ends.
   - Be sure to match the pressure and return line to one valve bank.
   - Hoses have been labelled in a suggested order of priority from most used to least: (1) Wheels (2) Rollers (3) Transport (4) Wings (5) Jack
5. Use the hydraulic jack controls to raise or lower the hitch to align with the drawbar.

   ⚠ **IMPORTANT:** Close the ball valve (if equipped) to prevent accidental operation of this circuit. Ensure ball valve handle remains in closed position.

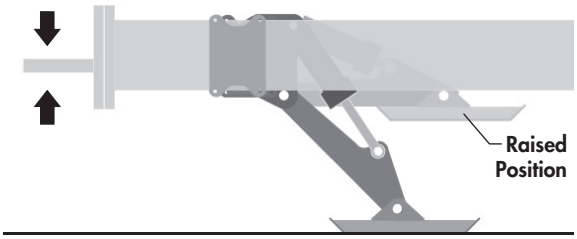

⚠ **WARNING:** *Tractor **MUST** be equipped with a clevis hitch to prevent unit from tipping upward while folding into and out of transport. A safety chain must also always be properly installed.*

6. Slowly back tractor up to align the hitch.
7. Install a drawbar pin with provisions for a mechanical retainer such as a KLIK pin. Install the retainer.
8. Install a safety chain between the tractor and the hitch.
9. Connect lights (electrical socket plug) to tractor.
10. Raise the hydraulic hitch jack.
11. When unhooking from the tractor, reverse the above procedure.

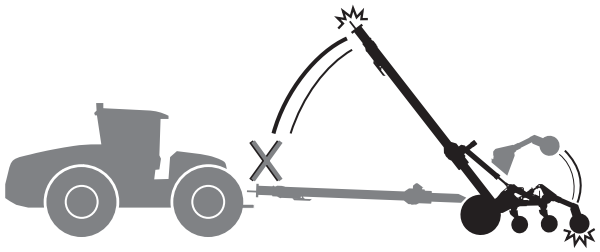

⚠ **WARNING/DANGER:**

Never *disconnect Pro-Till from tractor if rear sections of machine are partially raised.*

Negative Hitch Weight *may result, the hitch pole may suddenly raise, and the rear section would come crashing down. Only disconnect when unit is on level ground in the proper transport or field position.*





⚠ **WARNING/DANGER:**

*The tractor **MUST** be properly equipped with a clevis hitch and safety chain to prevent **Negative Hitch Weight** occurring when raising or lowering the rear sections.*

If the unit is not properly attached to the tractor with a clevis hitch and safety chain, the negative hitch weight could result in the hitch pole suddenly raising and the rear section to come crashing down.

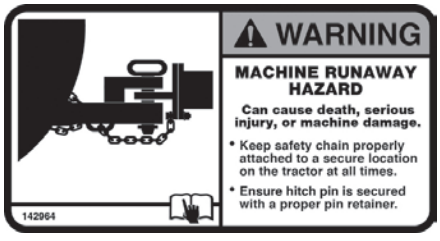

Transport

TRANSPORT SAFETY

1. Read and understand ALL the information in the Operator's Manual regarding procedures and SAFETY when operating the PRO-TILL in the field/yard or on the road.
2. Check with local authorities regarding machine transport on public roads. Obey all applicable laws and regulations.
3. Always travel at a safe speed. Use caution when making corners or meeting traffic.
4. Make sure the SMV (Slow Moving Vehicle) sign, and all the lights and reflectors that are required by the local highway and transport authorities are in place, are clean and can be seen clearly by all overtaking and oncoming traffic. Be sure to check with local highway authorities and comply with their lighting and transport requirements.
5. Keep to the right and yield the right-of-way to allow faster traffic to pass. Drive on the road shoulder, if permitted by law.
6. Always use hazard warning flashers on tractor when transporting unless prohibited by law.
7. Always use a pin with provisions for a mechanical retainer and a safety chain when attaching to a tractor or towing vehicle.

TRANSPORTING

Use the following guidelines while transporting the PRO-TILL*:*

1. Use a safety chain and a pin with provisions for a mechanical retainer.

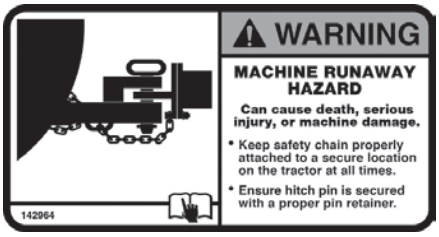

2. Ensure Pro-Till is in the full transport position with the wing rollers secure and properly in place.
3. Ensure debris that may fall or become dislodged during transport is removed.
4. Be sure hazard lights are flashing and SMV decal is visible.
5. MAXIMUM RECOMMENDED TRANSPORT SPEED: **MAX 40 km/h** or **25 mph**. (Road Conditions, Field speeds may be lower.)

   Due to weight of the machine and tire ratings, do not exceed the recommended maximum speeds or severe tire damage / excessive wear may occur.
6. If the Pro-Till is to be towed in Transport for an extended duration with speeds up to 40km/hr, the centre frame wheels (transport tires) must be checked and properly inflated: **94 PSI** (648 kPa).

⚠ **IMPORTANT:** *Under NO CIRCUMSTANCES should there ever be riders while the Pro-Till is in transport.*



Transport to Field Position Overview

TRANSPORT TO FIELD POSITION

FOLLOW PROCEDURE BELOW:

A. On level ground, position the PRO-TILL so it is straight in-line behind the tractor.



B. **Slightly** extend the Transport Cylinders (#3) just enough to remove the weight of wings off from the wing transport carriers. Do not lift more than needed.

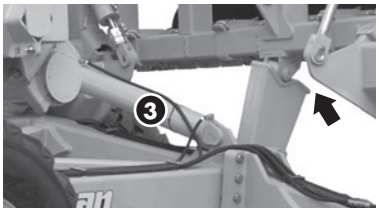

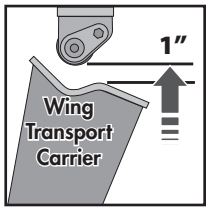

⚠ **IMPORTANT:** ***Do Not*** *fully extend the transport cylinders at this point. Follow proper procedures to prevent possible equipment damage or failure.*

C. Extend the Wing Cylinders (#4) to fully open the wings behind the machine.

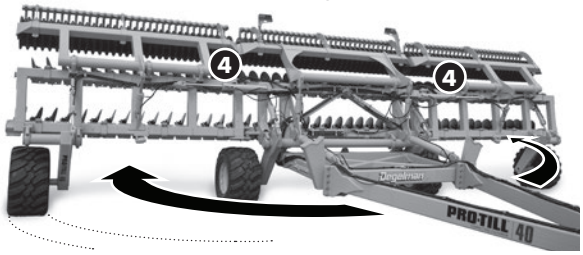

⚠ NEVER LIFT WINGS!

Unfold using the **Wing Cylinders (4)**, *then* lower all rear sections using the **Transport Cylinders (3)**.

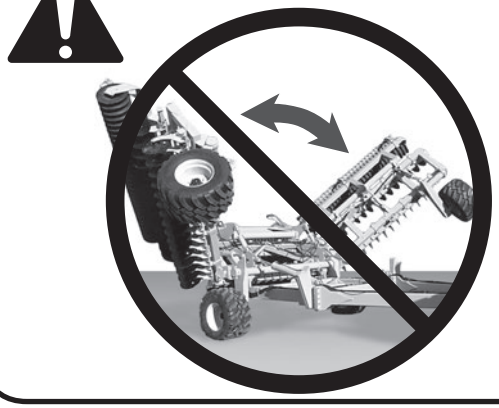

D. After fully opening the wings, extend the Transport Cylinders (#3) to completely lower all the PRO-TILL rear frame sections to the ground.

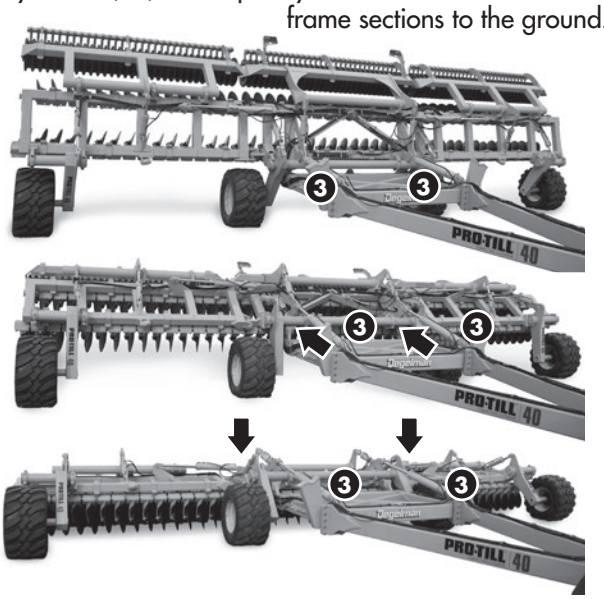

E. Place the Transport Cylinders (#3) into FLOAT position before operation.

⚠ **IMPORTANT:** *The* ***Transport*** *Cylinders* **MUST** *be in the "**FLOAT**" position in order for the PRO-TILL to properly contour the ground and to avoid possible cylinder or equipment damage.*





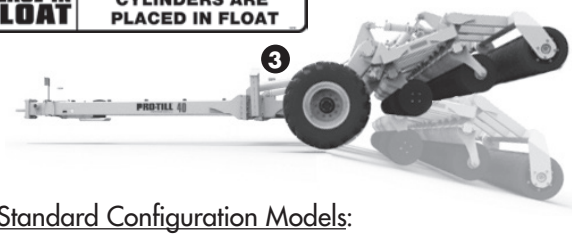

F. Standard Configuration Models:

Wing Cylinders (#4) - During operation, place the Wing Cylinders into the FLOAT position before operation.

- OR -



F. Models with Wing Pressure Kit:

Wing Cylinders (#4): During operation, the wing circuit hydraulics need to be engaged **constantly** from the tractor, in the extended direction. This will ensure constant down pressure is applied to the wings and the machine can still contour over uneven terrain effectively. (*Refer to your tractor's manual for proper procedures.*)



Field to Transport Position Overview

FIELD TO TRANSPORT POSITION

FOLLOW PROCEDURE BELOW:



A. Fully extend the Wheel & Roller Cylinders (#1 & #2) to completely raise the **disc frames**.

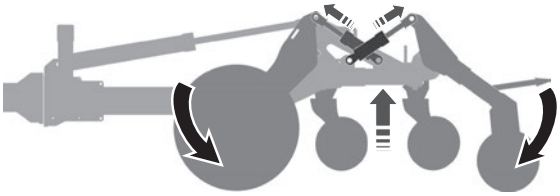

NOTE: *It is important to fully raise the disc frames up as high as possible as it puts the rollers and wheels in the correct position for low transport.*

B. Retract the Transport Cylinders (#3), fully raising the **complete rear section** (center & both wing sections).

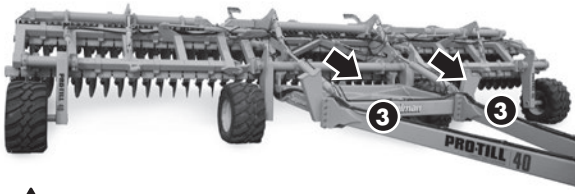

⚠ **IMPORTANT:** ***Do Not*** *retract the wing cylinders to raise the wings at this point. Follow proper procedures to prevent possible equipment damage or failure.*

⚠ NEVER LIFT WINGS!

Lift rear sections using the **Transport Cylinders (3)**, *then* fold the wings forward using the **Wing Cylinders (4).**

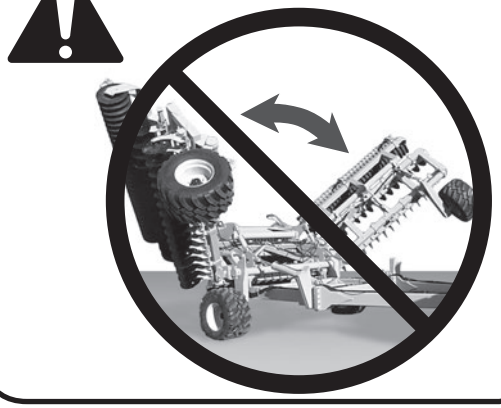

C. After raising all the rear sections together, retract the Wing Cylinders (#4) to bring both wings inward towards the frame.

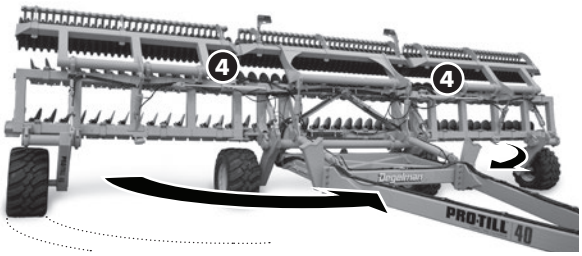



D. When the wings get close to the wing transport carriers, you may need to *slightly* extend the Transport Cylinders (#3) so the rollers can reach the correct position.

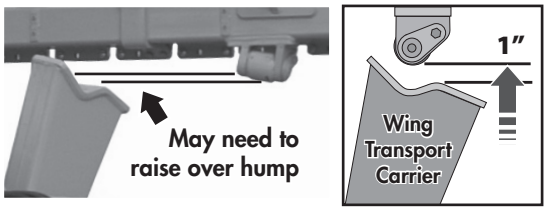

E. With the wings in the proper position, retract the Transport Cylinders (#3) fully lowering the wings onto the wing transport carriers.

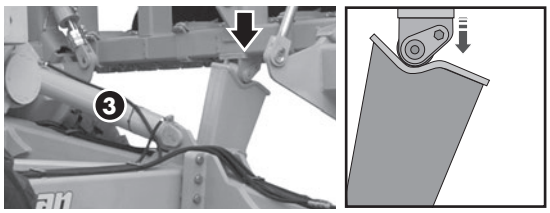

OPERATING SAFETY

1. Read and understand the Operator's Manual and all safety signs before using.
2. Stop tractor engine, set park brake, remove ignition key and wait for all moving parts to stop before servicing, adjusting, repairing or unplugging.
3. Keep hands, feet, hair and clothing away from all moving and/or rotating parts.



4. Do not allow riders on the PRO-TILL tractor during operation or transporting.
5. Keep all shields and guards in place when operating (if applicable).
6. Clear the area of all bystanders, especially children, before starting.
7. Do not operate machine on overly steep side hills or slopes.
8. Be careful when working around or maintaining a high-pressure hydraulic system. Ensure all components are tight and in good repair before starting.

BREAK-IN

Although there are no operational restrictions on the PRO-TILL when it is new, there are some checks that should be done when using the machine for the first time, follow this procedure:

⚠ **IMPORTANT:** *It is important to follow the Break-In procedures especially those listed in the "Before using" section below to avoid damage:*

A. Before using:

1. Read Safety Info. & Operator's Manual.
2. Complete steps in "Pre-Operation Checklist".
3. Lubricate all grease points.
4. Check all bolt tightness.
5. Confirm Ridge Wipers are installed in proper position after shipping and adjusted.
6. Adjust Disc Cutting Depth as outlined in the "Setting Disc Depth" section.

B. After operating for 2 hours:

1. Check all hardware. Tighten as required.
2. Check all hydraulic system connections. Tighten if any are leaking.

PRE-OPERATION CHECKLIST

It is important for both personal safety and maintaining good operational condition of the machine that the pre-operational checklist be followed.

Before operating the machine and each time thereafter, the following areas should be checked off:

1. Lubricate the machine per the schedule outlined in the "Maintenance Section".
2. Use only a tractor with adequate power to pull the PRO-TILL under ordinary operating conditions.

   NOTE: *It is important to pin the drawbar in the central location only.*

3. Ensure that the machine is properly attached to the tractor using a clevis hitch, safety chain and a drawbar pin with provisions for a mechanical retainer. Make sure that a retainer such as a Klik pin is installed.

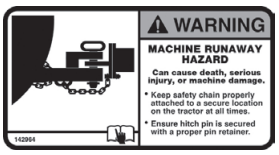

⚠ **WARNING:** ***Negative Hitch Weight*** *may occur when raising or lowering the rear sections. If the unit is not properly attached to the tractor with a clevis hitch and safety chain, the negative hitch weight could result in the hitch pole to suddenly raise and the rear sections to come crashing down.*





4. Before using, inflate tires to:

   Outer Wing Tires (FL630 ULTRA):
   600/50 R22.5: **58 PSI (400 kPa)**

   Center/Transport Tires (382 FLOTRUCK):
   600/50 R22.5: **94 PSI (648 kPa)**

5. Check oil level in the tractor hydraulic reservoir. Top up as required.
6. Inspect all hydraulic lines, hoses, fittings and couplers for tightness. Tighten if there are leaks. Use a clean cloth to wipe any accumulated dirt from the couplers before connecting to the tractor's hydraulic system.
7. Inspect the condition/wear of the discs. If needed or desired, adjust the Disc Cutting Depth as outlined in the adjustments section. If excessive disc wear is evident, replacement may be required. Refer to maintenance section.

OPERATING GUIDELINES

1. Re-phase and cycle oil in the Depth Control Cylinders (Wheels #1 and Rollers #2) before use. This is especially important after long periods of storage.

2. Place the Transport Cylinders (#3) into the FLOAT position before operation.



IMPORTANT: *The Transport Cylinders* **MUST** *be in the* ***FLOAT*** *position for the PRO-TILL to contour properly and to avoid possible cylinder or equipment damage.*



IMPORTANT: *Operator* **must** *read and understand the tractor manual in order to place the required hydraulic circuits into* ***float position****.*

3. Wing Cylinders (#4): (*Dependant on Model, see below*)

Standard Configuration Models

During operation, place the Wing Cylinders into the ***FLOAT position*** before operation.



- OR -

Models with Wing Pressure Kit



During operation, the wing circuit hydraulics need to be **engaged constantly** from the tractor, in the extended direction. This will ensure constant down pressure is applied to the wings and the machine can still contour over uneven terrain effectively.

IMPORTANT: *Operator* **must** *read and understand the tractor manual to place the required hydraulic circuits into* ***constant pressure position,*** *in the correct direction.*

4. **IDEAL OPERATING SPEED** is 10-12 mph.
   Minimum operating speed is 8 mph.
   Maximum operating speed is 14 mph.

5. When making headland turns, the operator may wish to slightly raise the disc sections by activating the Wheel (#1) or Roller (#2) cylinders (or both). Remember to lower after coming out of the turn.

6. Each time you start a new field you may need to adjust the cutting depth depending on the type of crop residue or soil conditions. The operator can adjust the cutting depth by raising/lowering the front or rear sets of discs by following the guidelines in the "Setting Disc Depth" section.

7. After making adjustments to the cutting depth it is recommended to bring the Pro-Till up to speed (10-12mph) to test the depth setting by driving about 100m (cutting performance changes dramatically from a slow speed to high speed). Stop, check depth and cut of field, re-adjust the height higher or lower, if needed, based on your preference. Remember: Removing a 1/4" stop lowers cutting depth 1/2" deeper, Adding a 1/4" stop raises discs up 1/2" higher.

8. Harder, packed soil may require additional passes for optimum results. It is recommended to do a second pass at an angle to the original pass.

FACTORY DISC SETUP

20" Disc Setup

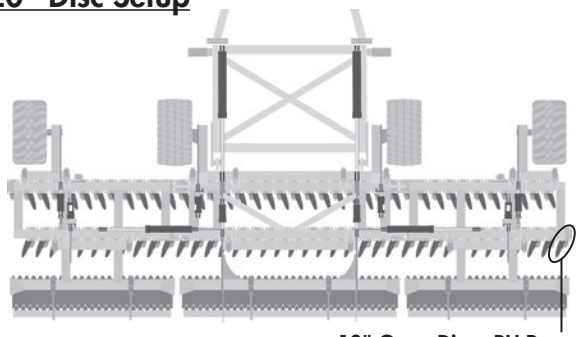

18" Outer Disc - RH Rear

LH WING 2-1/2"

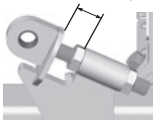

Intitial Distance settings for Wing Wheel Cylinder Adjustment Lugs.

RH WING 2"

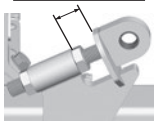

22" Disc Setup

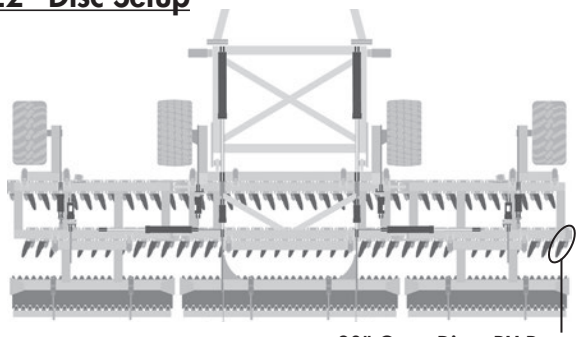

20" Outer Disc - RH Rear

LH WING 2-1/2"

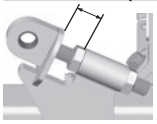

Intitial Distance settings for Wing Wheel Cylinder Adjustment Lugs.

RH WING 2"

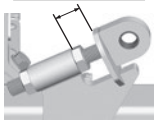

SETTING DISC DEPTH - FRONT AND REAR

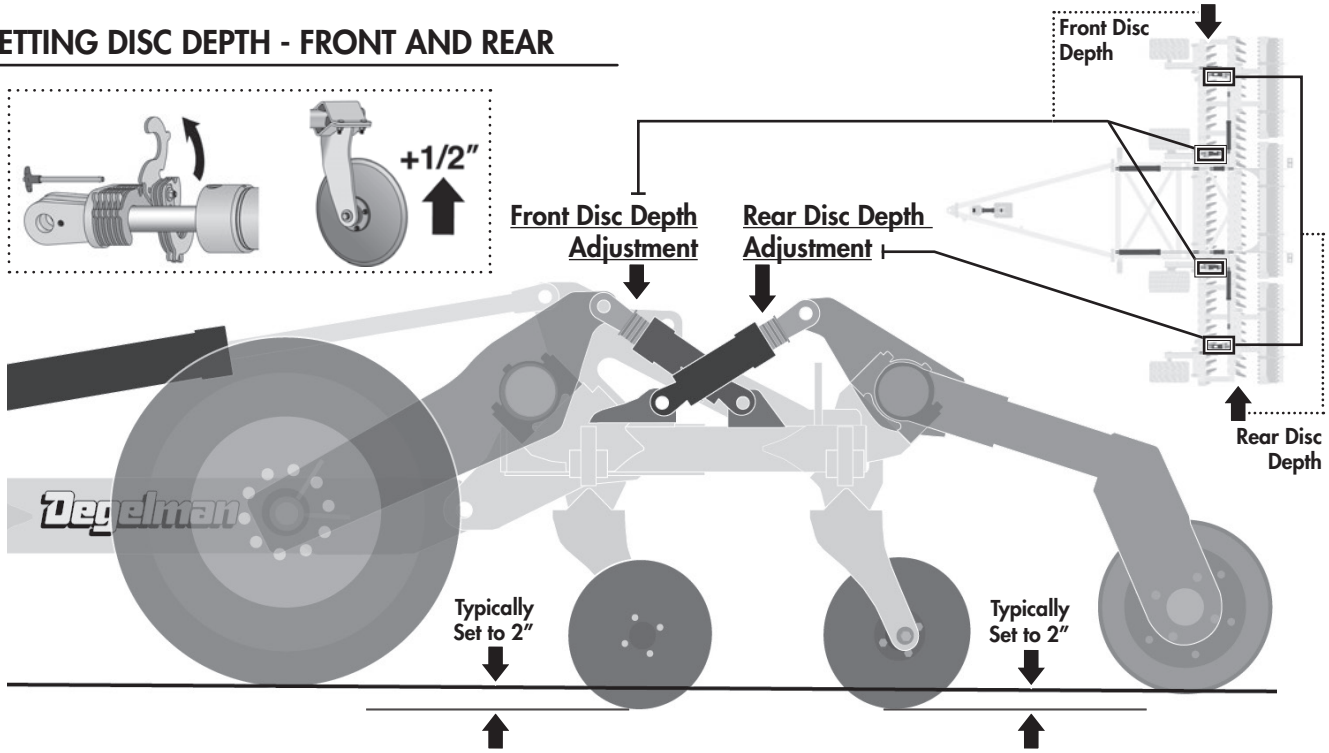

DEPTH SETTING OVERVIEW

Adjusting the cutting depth of the front and rear discs is accomplished by adding or removing a number of spacers from specified cylinders.

The spacers limit the stroke distance of the cylinders, changing the amount that the front and rear of the disc frames are lowered.

Each spacer that is added to the cylinders raises the frame height by 1/2". Therefore, to lower discs deeper into the soil, you would remove *one* spacer for *each* 1/2" of depth change required.

A typical recommended penetration depth of 2" is suggested for both front and rear discs. This depth, however, can be adjusted to the operators needs and preferences or based on different crop varieties and soil conditions.

Some operators may also prefer to adjust the front or rear frame disc sections to run slightly higher than the other. Adjustments to the front or rear disc sections are done individually:

• Adjust the front disc height by adding/removing spacers to the two center section wheel cylinders.

• Adjust the rear disc height by adding/removing spacers to the two rear wing roller cylinders.

NOTE: *As the discs wear with usage, the disc depth settings will also need to be adjusted accordingly.*

Use the following as a guideline for setting depth:

1. Drive the PRO-TILL onto level ground. For initial setup, try **"12 Spacers"** on each cylinder stop.
2. Fully retract the Wheel (#1) and Roller (#2) cylinders to lower rear frame to ground.
3. Check the penetration depth of the front and rear row of discs. Take note of how much you would like to raise or lower both the front and rear disc sections - round to the nearest 1/2".
4. Fully raise the frame back off the ground by extending the Wheel (#1) and Roller (#2) cylinders.
5. Adjust Front Disc height from the two center wheel cylinder positions.

   Lower Front Discs - **Remove one spacer** for each **1/2"** you want to **Lower** it.

   Raise Front Discs - **Add one spacer** for each **1/2"** you want to **Raise** it.

6. Adjust Rear Disc height from the two wing roller cylinders positions.

   Lower Rear Discs - **Remove one spacer** for each **1/2"** you want to **Lower** it.

   Raise Rear Discs - **Add one spacer** for each **1/2"** you want to **Raise** it.

7. Repeat above procedure until proper depth is achieved.

SCRAPER POSITION OVERVIEW

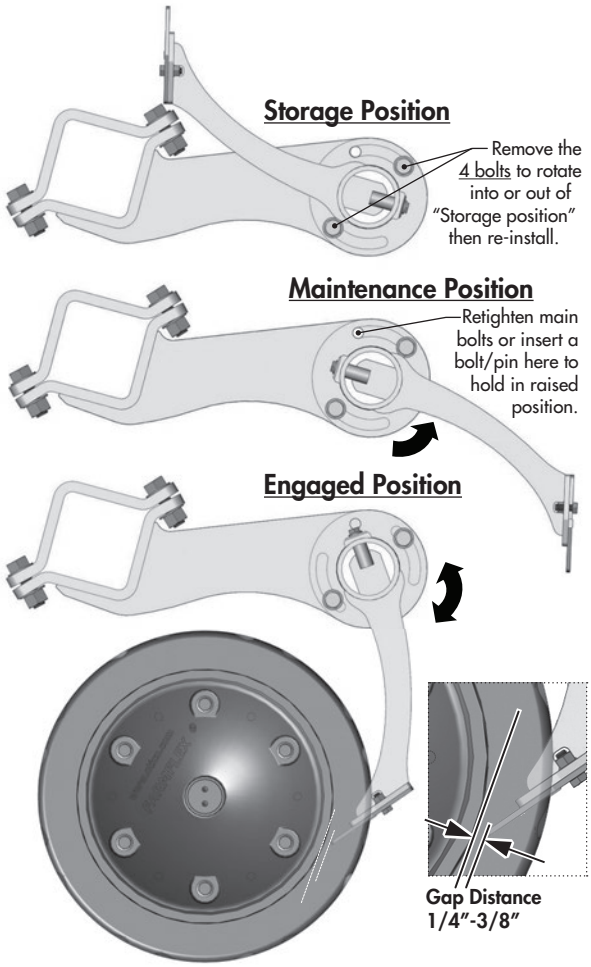

SCRAPER SIDE-TO-SIDE POSITIONING

Inspect that the scraper plates are as close to centered as possible in the roller groove & that no scrapers are touching the sides of the rubber roller. *(Ideally there should be a 1/4" gap)*

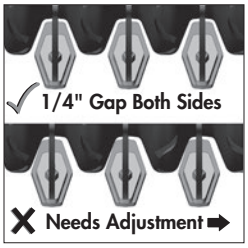

If adjustment is needed, loosen the scraper arm clamps and adjust position until there is proper clearance on all edges. You may need to slightly adjust engagement distance if side-to-side is unsuccessful.

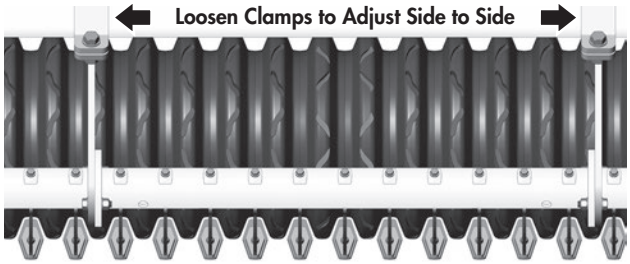

SETTING SCRAPER POSITION

Change into Storage Position:

- Loosen & remove the 4 bolts (2 per arm).
- Rotate section upward to new position.
- Reinstall bolts and tighten in place.
- Reverse procedure to put into working position.

Change into Maintenance Position (from engaged):

- Loosen the 4 bolts (2 per arm).
- Rotate section upward until top hole is open.
- Tighten bolts to secure and/or insert bolt or insert pin (user supplied) into top hole to secure in position.

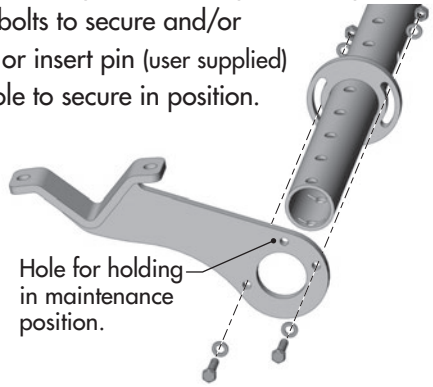

Change into Engaged Position (from maintenance):

- Loosen the 4 bolts (2 per arm).
- Rotate section down until scraper blades are set to proper distance from inner roller groove. (1/4" to 3/8" is the recommended distance)
- Tighten bolts to secure in position.

INDIVIDUAL SCRAPER ARM ADJUSTMENT

The individual scraper arm position can also be fine tuned by loosening the top mounting bolt, adjusting the position, and then "holding in place" while retightening the bolt.

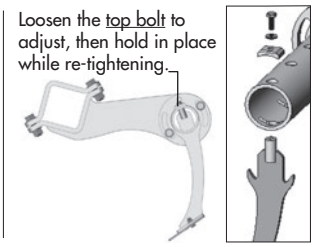

REVERSING SCRAPER BLADES

The scraper blades are designed to be reversible in order to provide extended wear. It is advised to reorder replacement blades soon after reversing to prevent possible downtime in the future.

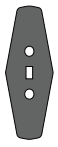

Double Sided Scraper Blades

Note: When blades are being reversed, the complete section must be changed at the same time or adjustment will not work properly.



Operation - Adjustments: Rephasing Cylinders

Overview & Principles of Rephasing

A **Rephasing Cylinder System** enables a pair (or multiple) cylinders to extend and retract in very near unison.

Rephasing is accomplished by using a rephasing passageway which is located at the position of full extension. Many design techniques accomplish this but in simplicity, the ***rephasing passageway*** allows a small amount of hydraulic fluid to bypass the cylinder piston in the fully extended position ultimately allowing the cylinders to rephase.

This feature allows the cylinders to be aligned during set up and ***rephased*** in the event of oil leakage/by-pass during usage or after service work.

A rephasing cylinder system will consist of a master cylinder and 1 or more slave cylinders. These cylinders operate evenly to raise and lower the implement to the desired working depth.

Bleeding Air & Rephasing Function

Rephasing cylinder lift systems should be ***rephased*** periodically to purge any air that may be ingested into the system over time and/or compensate for drift due to system leakage.

To rephase the system, with the cylinder fully extended, actuate the cylinder valve for 30 seconds, or 5-10 seconds if you rephase often.

In a new rephasing circuit, a much longer time of maintaining a fully extended sequence may be required to bleed excessive air out of the circuit and may have to be repeated several times.

⚠ **IMPORTANT:** *A rephasing cylinder circuit utilizes positive-displacement that effectively transfers power between cylinders, with the possibility of increasing internal pressures from cylinder to cylinder. Intensification occurs in hydraulic cylinders when there is pressure supplied to the full bore end of the hydraulic cylinder (extension) but the rod end (retraction) port becomes blocked or under excessive load. Pressure intensification may cause pressures to exceed the working pressure ratings of the cylinders themselves, or other components within the system. Safety awareness and caution should be taken to identify signs or causes of potential pressure build-up in the circuit.*

Troubleshooting

Series rephasing cylinder systems *(Master and Slave(s))* can exhibit undesirable behaviors such as ***creep*** *(drift or movement when the hydraulic cylinder is not in use)* or ***failing to stay synchronized*** *(not extending and retracting at the same rate).*

Below is a brief overview of some of the possible conditions that contribute to cylinder creep, drift or the series cylinder getting out of sync. Keep in mind that the cylinders are only part of the hydraulic circuit and there can be other contributing causes.

Cylinder rod measurement method:

Cylinder by-pass is a common field issue in series cylinder systems, and a systematic review is required to determine the problem.

- Extend the cylinders fully to the re-phasing position, then retract approximately 2+ inches away from the rephasing position.
- Immediately disconnect the hydraulics from tractor.
- Measure the length of the extended cylinder rod on each cylinder.
- Leave implement to stand for some an extended period of time, i.e. 3 hours.
- Re-measure length of rods again and compare before and after measurements.

  Please note: Variation can be expected if the implement is left over a time where the temperature change affects the hydraulics by contraction or expansion. Warm to cooler temperatures will cause the series cylinders to move. Make sure measurements are taken at similar temperatures.
- When the 'suspect' cylinder has been identified, disassembly must be carried out in a clean environment. The scoring of barrels and piston seals will usually indicate contamination of some type has entered the system.

Air in the system:

If one or all of the cylinders drift or the system is 'spongy' air is likely entrained in the system. Check for air bubbles going back to the tank or by removing the return line and catching oil in a clean container. With the rod clevises disconnected and the cylinders horizontal (ports at 12 o'clock) or vertical, hold in the re-phasing position until no aerated oil flows.

Please note: Check the reservoir levels when carrying out this exercise. Once the air has been pushed out of the system the reservoir can become low. This can introduce air into the system again.

ADJUSTING WING DOWN PRESSURE

The purpose of the wing pressure valve is to provide constant down pressure to the wings of the Pro-Till in order to reduce the likelihood of the "Resonance" or "Bounce" issue occurring. It also transfers some of the weight of the heavier center frame out towards the wings for a more even field finish and consistent tillage depth.



To Adjust:

Apply constant down pressure to the wing circuit using the tractor hydraulics. Verify that the pressure gauge reads around 1100psi.

If the pressure reads higher or lower than 1100psi (+/- 50psi) it may require adjustment.

******DO NOT EXCEED 1400 PSI******



With the circuit still under pressure, loosen the lock nut (14mm) for the adjustment screw on the pressure reducing/relieving valve cartridge.

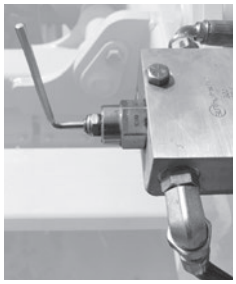

Using an allen key, adjust set screw clockwise to raise pressure or counter-clockwise to reduce it until the gauge reads the proper pressure setting.

Re-tighten lock nut.

Note: Future adjustment of this screw may be necessary for different field conditions and working depths.

Troubleshooting - Pro-Till 33/40

Plugging disc rows in wet conditions:

- Ensure roller is turning & scrapers are set properly.
- Raise machine working depth.
- Increase operating speed slightly.
- Adjust pitch so front discs are slightly higher (add one more depth stop plate to wheel cylinders).
- Fully extend wheel & roller depth cylinders & hold for 30 seconds to re-phase.
- Check condition & operation of disc hubs (make sure they turn freely).
- Wait for soil conditions to dry out more.

Roller skidding in wet conditions:

- Check scraper operation & settings.
- Raise machine working depth.
- Adjust pitch so rear discs are slightly higher & raise machine working depth.
- Momentarily take out of float & extend transport cylinders to simulate a rigid hitch ***(flat ground only)***. **Re-engage float** as soon as possible to avoid possible equipment damage.
- Wait for soil conditions to dry out more.
- Check condition & operation of bearings on both ends of the rollers.

Mud not clearing from rubber rollers:

- Check scraper to roller distance & adjust if necessary (scraper should be 1/4" to 3/8" from roller).
- Check scraper plate wear & adjust or replace as necessary (replace all scrapers per row at the same time).
- Check scraper row adjustment for slippage & re-torque or replace hardware if necessary.

Roller plugged in wet conditions:

- Retract transport cylinders to pass over pushed up mound & smooth out when soil dries.
- Raise discs all the way up & drive 12-14 mph on firm soil to clear rollers.
- In certain wet soil conditions place scrapers in storage position to continue operating.
- If plugging persists wait for soil conditions to dry out even more.

Rear discs or roller not engaging in very hard soil:

- Adjust pitch so front discs are higher by adding two depth stops or more to wheel cylinders only (It may be necessary to lower overall machine depth also).
- Momentarily take out of float & extend transport cylinders to simulate a rigid hitch ***(flat ground only)***. **Re-engage float** as soon as possible to avoid possible equipment damage.

Not folding up for transport:

- Ensure hydraulic coupler has not disengaged or try a different tractor hydraulic port.
- Check for hose or fitting leaks.
- Tractor hydraulic system should have 2800 psi.
- Hydraulic fluid bypassing piston seals in one or both hydraulic cylinders. (Replace cylinder or re-build with new seals).
- Excessive mud built up on frame & rollers. Clear off frame raise discs all the way up & drive 12-14 mph on firm soil to clear rollers.

Restriction or blocking on right side:

- Raise the deflector plate.
- Raise working depth of adjustable disc.
- Raise machine working depth.
- Reduce operating speed slightly.
- Extend right hand wheel adjustment to lift end of wing.
- Check condition & operation of disc hubs (make sure they turn freely).
- Wait for soil conditions to dry out more.

Leaving a ridge or a groove between rollers:

- Adjust ridge wiper down slightly to remove ridge.
- Adjust ridge wiper up slightly to eliminate groove.



Tractor oil temperatures are too high:

(models with Wing Pressure Kit)

- Lower the flow on the wing circuit hydraulic remote. (Please refer to the Tractor's Operators Manual)

Troubleshooting - Pro-Till 33/40

Leaving a ridge or a groove between passes:

- Adjust deflector up to reduce ridge.
- Adjust deflector down to fill groove.
- Set right rear adjustable disc lower if there is a ridge.
- Set right rear adjustable disc higher if there is a groove.
- Check that end disc size configuration matches factory suggested setup.
- Reduce implement width on guidance for slightly more overlap.

Subsoil leaving a groove/ridge every 10":

- Adjust pitch to level machine (disc rows are not set to the same depth).
- Adjust pitch to lower/raise rear disc row (front is prone to running deeper with floating hitch & firm soil conditions).
- Rear discs following in front disc groove (see troubleshooting for this below).

Rear discs following in front disc cut or discs not doing a full cut:

- Adjust tracking by changing implement pitch.
- Adjust entire front row of disc gangs in small increments either left or right to achieve full cut.
- Check disc wear & adjust gang spacing or replace discs as necessary (as discs wear move front row right).
- Check factory settings on disc row locations to verify gang clamp hardware is tight & clamps have not slipped.
- Adjust GPS to actual cutting width *(see chart)* minus 6" overlap per side depending on working depth.
  Note: Also consider adjusting the GPS settings to include a 6" implement offset to the right.



(with 20" discs)	2" Depth	MAX Depth
Pro-Till 33	390" (9.9m)	392" (10m)
Pro-Till 40	470" (11.9m)	473" (12m)
Pro-Till 40 CT	491" (12.4m)	493" (12.5m)

- Adjust working angle to approximately 20 degrees to the right from previously worked or seeded rows. *(Recommended practice)*

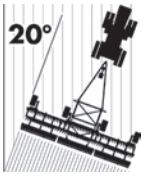

End of wing discs cutting deeper or shallower than center:

- Fully extend wheel & roller depth cylinders & hold for 30 seconds to re-phase.
- Extend wheel adjustment to lift end of wing if cutting deeper.
- Retract wheel adjustment to lower end of wing if cutting shallower.
- Check for same number of depth control plates used on each side.
- Adjust the wing down pressure valve using an allen wrench in small increments of 50-100 psi until the desired result is achieved. **IMPORTANT:** *Do not exceed 1400 psi or mechanical damage will occur.*

Tracking to the left:

- Add a depth stop to wheel cylinders to adjust the pitch so the front disc is higher.
- Reduce implement width on guidance system for slightly more overlap.
- Adjust implement offset on guidance system to the right.



Tracking to the right:

- Add a depth stop to roller cylinders to adjust the pitch so the rear disc is higher.
- Reduce implement width on guidance system for slightly more overlap.
- Adjust implement offset on guidance system to the left.



Hopping or leaving waves:

- Change operating speed (best performance is achieved over 10 mph).
- Change field working angle (best finishing at 5 to 20 degrees off previously worked).
- Adjust working depth (deeper & run slower or shallower to run faster).
- Pre-work heavy trash or wet areas at a slower speed & at a different angle than final pass.
- Wait for soil conditions to dry out more.
- *Models with Wing Pressure Kit:* Ensure the wing circuit hydraulic remote is constantly engaged in the extended direction.

MAINTENANCE SAFETY

1. Review the Operator's Manual and all safety items before working with, maintaining or operating the PRO-TILL.
2. Stop the tractor engine, set park brake, remove ignition key and wait for all moving parts to stop before servicing, adjusting, repairing or unplugging.
3. Keep hands, feet, clothing and hair away from all moving and/or rotating parts.
4. Clear the area of bystanders, especially children, when carrying out any maintenance and repairs or making any adjustments.



5. Place safety stands or large blocks under the frame before removing tires or working beneath the machine.
6. Be careful when working around or maintaining a high-pressure hydraulic system. Wear proper eye and hand protection when searching for a high pressure hydraulic leak. Use a piece of wood or cardboard as a backstop when searching for a pin hole leak in a hose or a fitting.
7. Always relieve pressure before disconnecting or working on hydraulic system.
8. Never disconnect Pro-Till from tractor if rear sections of machine are partially raised. See warning below:





⚠ **WARNING/DANGER:** ***Never*** *disconnect Pro-Till from tractor if rear sections of machine are partially raised.* ***Negative Hitch Weight*** *may result, the hitch pole may suddenly raise and the rear section would come crashing down. Only disconnect when unit is on level ground in the proper transport or field position.*

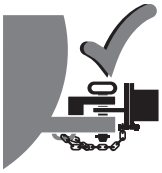

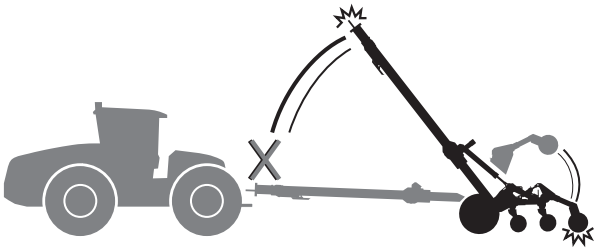

MAINTENANCE CHECKLIST

After reviewing the Maintenance and Hydraulic Safety Information, use the Maintenance Checklist provided for regular service intervals and keep a record of all scheduled maintenance:

(Note**: Do* **NOT** *grease the* ***spherical bearings)

Maintenance Check - 10 Hours

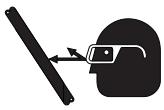

- Hydraulic fluid leaks
- Damaged hoses
- Check tire pressure:



Outer Wing Tires (FL630 ULTRA): 600/50 R22.5: **58 PSI (400 kPa)**

Center/Transport Tires (382 FLOTRUCK): 600/50 R22.5: **94 PSI (648 kPa)**

Grease Points - 25 Hours

- Front Frame / Rockshaft Pins
- Wing Frame Pins
- Cylinder Pins



Grease Points - 50 Hours

- Wing Transport Roller Pins
- Hubs & Spindles
- Working points & pins
- Safety signs clean

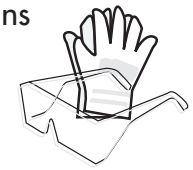

Annually

- Bolt tightness
- Wheel bearings



⚠ **IMPORTANT:** *Safely secure Pro-Till in winged forward transport position when changing or servicing discs.*

SERVICE

GREASING

Grease: Use an SAE multipurpose grease with extreme pressure (EP) performance. Also acceptable is an SAE multipurpose lithium.

1. Use only a hand-held grease gun for all greasing.
2. Wipe grease fitting with a clean cloth before greasing, to avoid injecting dirt.
3. Replace and repair broken fittings immediately.
4. If fittings will not take grease, remove and clean thoroughly. Also clean lubricant passageway. Replace fitting if necessary.
5. Inject grease until you see grease being expelled from the bearing or bushing areas.

WHEEL NUT & WHEEL BOLT TORQUE

TORQUE

BOLT PATTERNS

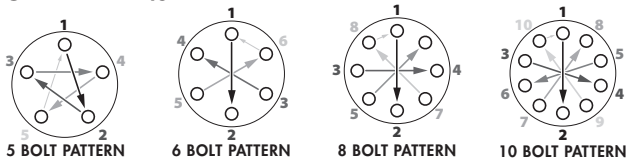

Wheel Nut/Bolt Torque

Size	lb.ft (N.m)
9/16	120-130 (165-175)
5/8	185-190 (250-260)
3/4	280-300 (380-405)

Wheel Tightening Procedure

1. Install and **hand tighten** nuts/bolts.
2. Tighten to approx. **20% Torque** value using the Bolt **Star or CrissCross** patterns shown above.
3. Tighten to **Full Torque** value using the **Star or CrissCross** pattern.
4. If applicable, install **Rear Locknuts** using **Wheel Torque Values**.

WHEEL HUB REPAIR

IMPORTANT: *Be sure to block up unit securely before removing tires.*

DISASSEMBLY

1. Remove dust cap.
2. Remove cotter pin from nut.
3. Remove nut and washer.
4. Pull hub off spindle.
5. Dislodge the inner cone bearing and dust seal.
6. Inspect cups that are press fitted into hub for pits or corrosion and remove if necessary.
7. Inspect and replace defective parts with new ones.

ASSEMBLY

1. If cups need replacing, be careful to install them gently and evenly into hub until they are fully seated.
2. Apply a thick wall of grease inside hub. Pack grease in cones.
3. Install inner cone and dust seal as illustrated.
4. Position hub onto spindle and fill surrounding cavity with grease.
5. Assemble outer cone, washer and nut.
6. Tighten nut while rotating hub until there is a slight drag.
7. Turn nut back approximately 1/2 turn to align cotter pin hole with notches on nut.
8. Install cotter pin and bend legs sideways over nut.
9. Fill dust cap half full of grease and gently tap into position.
10. Pump grease into hub through grease fitting until lubricant can be seen from dust seal.

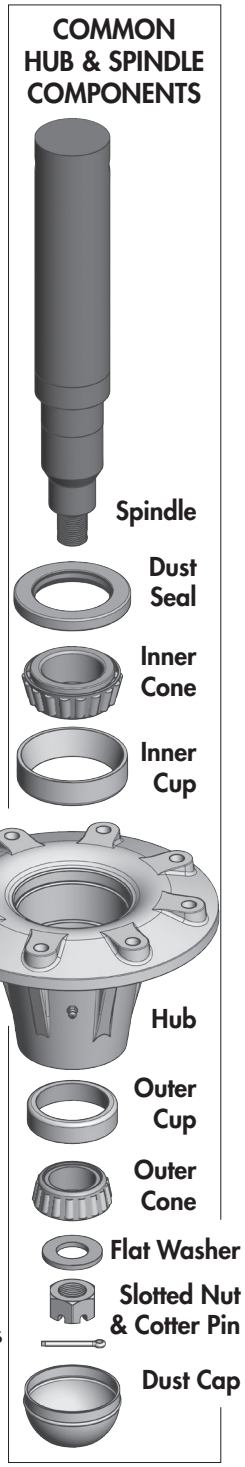

HARDWARE SPECIFICATIONS

Note: Unless stated otherwise, hardware is typically:
Hex, Plated GR5 UNC or P8.8 (metric)

TORQUE SPECIFICATIONS

TORQUE

Checking Bolt Torque

The tables below give correct torque values for various bolts and capscrews. Tighten all bolts to the torques specified in chart unless otherwise noted. Check the tightness of bolts periodically, using these bolt torque charts as a guide. Replace hardware with the same strength (Grade/Class) bolt.

IMPERIAL TORQUE SPECIFICATIONS

(Coarse Thread - based on "Zinc Plated" values)



Size	Grade 5	Grade 8
	lb.ft (*N.m*)	lb.ft (*N.m*)
1/4"	**7 (*10*)**	**10 (*14*)**
5/16"	15 (*20*)	20 (*28*)
3/8"	**25 (*35*)**	**35 (*50*)**
7/16"	40 (*55*)	60 (*80*)
1/2"	**65 (*90*)**	**90 (*120*)**
9/16"	90 (*125*)	130 (*175*)
5/8"	**130 (*175*)**	**180 (*245*)**
3/4"	230 (*310*)	320 (*435*)
7/8"	**365 (*495*)**	**515 (*700*)**
1"	550 (*745*)	770 (*1050*)
1-1/8"	**675 (*915*)**	**1095 (*1485*)**
1-1/4"	950 (*1290*)	1545 (*2095*)
1-3/8"	**1250 (*1695*)**	**2025 (*2745*)**
1-1/2"	1650 (*2245*)	2690 (*3645*)

METRIC TORQUE SPECIFICATIONS

(Coarse Thread - based on "Zinc Plated" values)



Size	Class 8.8	Class 10.9
	lb.ft (*N.m*)	lb.ft (*N.m*)
M6	**7 (*10*)**	**10 (*14*)**
M8	16 (*22*)	23 (*31*)
M10	**30 (*42*)**	**45 (*60*)**
M12	55 (*75*)	80 (*108*)
M14	**90 (*120*)**	**125 (*170*)**
M16	135 (*185*)	195 (*265*)
M18	**190 (*255*)**	**270 (*365*)**
M20	265 (*360*)	380 (*515*)
M22	**365 (*495*)**	**520 (*705*)**
M24	460 (*625*)	660 (*895*)
M27	**675 (*915*)**	**970 (*1315*)**
M30	915 (*1240*)	1310 (*1780*)
M33	**1250 (*1695*)**	**1785 (*2420*)**
M36	1600 (*2175*)	2290 (*3110*)

HYDRAULIC SAFETY

- Make sure that all components in the hydraulic system are kept in good condition and are clean.
- Replace any worn, cut, abraded, flattened or crimped hoses and metal lines.
- Do not attempt any makeshift repairs to the hydraulic lines, fittings or hoses by using tape, clamps or cements. The hydraulic system operates under extremely high-pressure. Such repairs will fail suddenly and create a hazardous and unsafe condition.
- Wear proper hand and eye protection when searching for a high-pressure hydraulic leak. Use a piece of wood or cardboard as a backstop instead of hands to isolate and identify a leak.

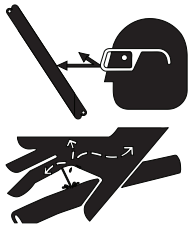

- If injured by a concentrated high-pressure stream of hydraulic fluid, seek medical attention immediately. Serious infection or toxic reaction can develop from hydraulic fluid piercing the skin surface.
- Before applying pressure to the system, make sure all components are tight and that lines, hoses and couplings are not damaged.

HYDRAULIC HOSE SPECIFICATIONS

Note: Unless otherwise stated, Hydraulic Hoses are either 3/8 or 1/2 with 3/4 JIC female swivel ends.

HYDRAULIC HOSE INSTALLATION TIPS

The following tips are to help you identify some possible problem areas in the installation of hydraulic hoses.

1. Installation should be completed in a clean environment clear of dust and contaminants. Hoses and fittings should be capped if not installed.
2. Ensure hoses are not twisted during installation as this may weaken the hose. Also, the pressure in a twisted hose may loosen fittings or connections.
3. Allow sufficient bend radius in hoses when installing to prevent lines from collapsing and flow becoming restricted.
4. When installing hoses in an area of movement or flexing, allow enough free length for motion and to ensure fitting connections are not stressed.
5. Ensure hoses are properly clamped and secured in position after routing is complete to provide a cleaner installation and prevent possible damage or hazards.

HYDRAULIC FITTING INSTALLATION

The following info is to help you identify and properly install some of our standard hydraulic fittings.

SAE (JIC) 37° Flare

JIC fittings - Metal-to-metal sealing type fittings featuring a 37° flare (angle of sealing surface) and straight UNF (Unified National Fine) Threads.

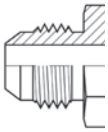

(Lubricated Values) Dash	Thread Size	Torque - lb.ft (*N.m*)	
-4	7/16 - 20	9-12	(12-16)
-6	9/16 - 18	14-20	(*19-27*)
-8	3/4 - 16	27-39	(*37-53*)
-10	7/8 - 14	36-63	(*50-85*)
-12	1-1/16 - 12	65-88	(*90-119*)

Tightening JIC 37° Flare Type Fittings

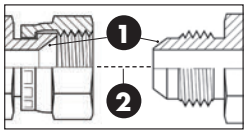

1. Check flare and flare seat for defects that might cause leakage.
2. Align fittings before tightening. Lubricate connections & hand tighten swivel nut until snug.
3. Using two wrenches, torque to values shown in table.

Alternate Installation Method

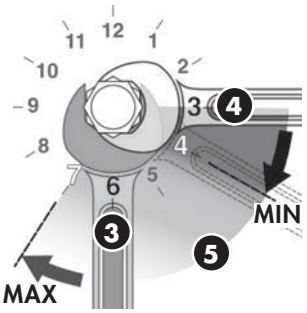

3. Using two wrenches. Place one wrench on the fixed connector body at a clock position of **6** o'clock.
4. Place the second wrench on the second connection as close to the **3** o'clock position as possible.
5. Tighten by rotating the second connection firmly to at least the **4** o'clock position, but no more than the **7** o'clock position. Typically, the larger the fitting size the less rotation required.

ORFS (O-Ring Face Seal)

ORFS fittings use an O-ring compression method to seal. This method offers a high level of sealing along with good vibration resistance. Male fittings include an O-ring located in a groove on the flat face. Female fittings feature a flat face and UNF straight threaded swivel nut.

The **Torque** method is recommended for ORFS installation.

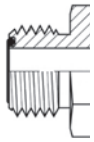

Dash	Thread Size	Torque - lb.ft (*N.m*)	
-4	9/16 - 18	18	(*25*)
-6	11/16 - 16	30	(*40*)
-8	13/16 - 16	40	(*55*)
-10	1 - 14	60	(*80*)
-12	1-3/16 - 12	85	(*115*)

Tightening ORFS (O-Ring Face Seal) Fittings

1. Inspect components and ensure the O-Ring seal is undamaged and properly installed in the groove of the face seal. Replacing the O-Ring may be necessary.
2. Align, thread into place and hand tighten.
3. Tighten to proper torque from the table shown above.

Note: A **DASH** size refers to a diameter of a hose (*inside*) or of a tube (*outside*) measured in 1/16″ increments.
For example, a ***Hose*** specified as *dash* **8** or **-8** would have an **inside** diameter of **8***/16″* or **1/2″**.
Alternatively, a ***Tube*** specified as *dash* **8** or **-8** would have an ***outside*** diameter of **8***/16″* or **1/2″**.

ORB (O-Ring Boss)

Male ORB fittings have straight UNF threads, a sealing face and an O-ring. The female fittings are generally found in the ports of machines and feature straight threads, a machined surface, and a chamfer to accept the O-ring. Sealing is achieved through the compression of the male O-ring against the chamfered sealing face of the female fitting.

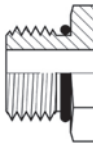

(Lubricated Values) Dash	Thread Size	Torque Non-Adjustable lb.ft (*N.m*)	Torque Adjustable lb.ft (*N.m*)
-4	7/16 - 20	30 (*40*)	15 (*20*)
-6	9/16 - 18	35 (*46*)	35 (*46*)
-8	3/4 - 16	60 (*80*)	60 (*80*)
-10	7/8 - 14	100 (*135*)	100 (*135*)
-12	1-1/16 - 12	135 (*185*)	135 (*185*)

Tightening ORB (O-Ring Boss) Fittings

Non-adjustable Port End Assembly

1. Inspect the components to ensure that male and female threads and sealing surfaces are free of nicks, burrs, scratches, or any foreign material.
2. Ensure O-Ring seal is properly installed and undamaged.
3. Lubricate threads and O-ring to help the O-ring slide past the port entrance corner and avoid damaging it.
4. Screw the fitting into position tighten to proper torque value from the table shown above.

Adjustable Port End Assembly

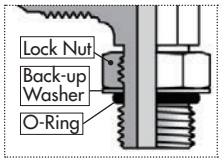

1. Inspect the components to ensure male & female threads and sealing surfaces are free of nicks, burrs, scratches, or any foreign material.
2. Ensure O-Ring seal is properly installed and undamaged.
3. Lubricate threads and O-ring to help the O-ring slide smoothly into the port and avoid damage.
4. Loosen back the lock nut as far as possible. Make sure back-up washer is not loose and is pushed up as far as possible.
5. Screw the fitting into port until the back-up washer or the retaining ring contacts face of the port. Light wrenching may be necessary. Over tightening may damage washer.
6. To align the end of the fitting to accept incoming tube or hose assembly, unscrew the fitting by the required amount, but not more than one full turn.
7. Using two wrenches, hold the fitting in desired position and tighten the locknut to the proper torque value from the table located above.
8. Inspect to ensure that O-ring is not pinched and that washer is seated flat on the face of the port.

HYDRAULIC CYLINDER REPAIR

PREPARATION

When cylinder repair is required, clean off unit, disconnect hoses and plug ports before removing cylinder.

When removed, open the cylinder ports and drain the cylinder's hydraulic fluid.

Examine the type of cylinder. Make sure you have the correct tools for the job.

You may require the following tools:

- *Proper **Seal Kit***
- *Rubber Mallet*
- *Screwdriver*
- *Punch*
- *Pliers*
- *Emery cloth*
- *Torque Wrench*

Types of Cylinders
(Wire Ring / Threaded Head)

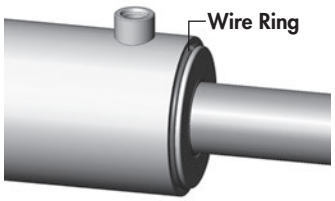

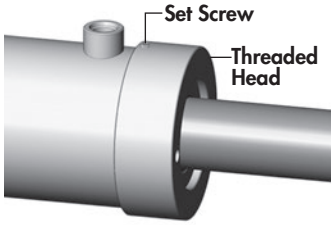

REPAIRING A WIRE RING CYLINDER

1. Retract the rod assembly.
2. Remove the external steel wire ring.

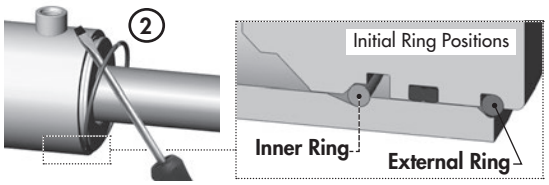

3. Remove any dirt that may have accumulated on the cylinder head.
4. Using the mallet and punch, push the head into the cylinder tube until the internal tube groove is fully exposed. This will also move the internal wire ring into its removal position.

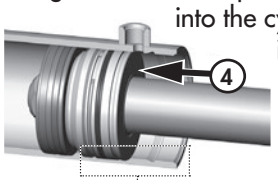



5. Take the plastic removal ring from the seal kit:
   a) Straighten the ring and remove any kinks or excessive curl to make installation easier and prevent it from falling out.
   b) Insert the removal ring into the internal groove with the feathered end pointing into the tube.

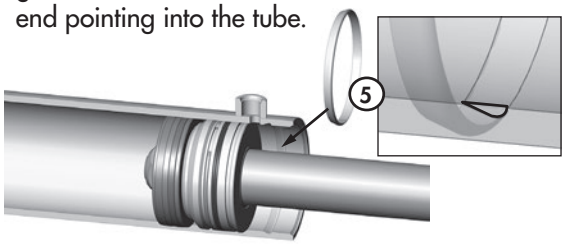

   c) Use a screwdriver or a finger to hold one end of the ring in the groove while fitting the other end of the ring into the groove. The tips should snap in together. Ensure it is secure and fully seated before the next step.

   IMPORTANT: It is important to e*nsure the removal ring is completely in the groove before pulling the rod out. If the ring sticks out it will get stuck between the head and tube.*

6. a) Extend the rod to pull head out of tube. If the rod does not pull out easily, push the head back in and ensure the ring is properly in the groove. Replace ring if necessary.

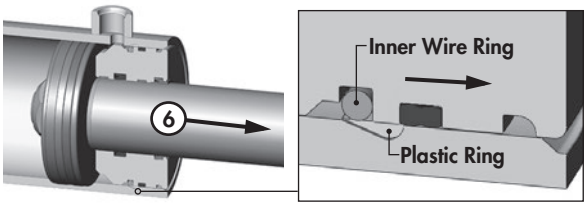

   Note: *Excessive force will not overcome a jammed ring and could damage the cylinder.*
   b) Completely remove rod and head from tube.

7. Remove plastic removal ring from the cylinder tube.

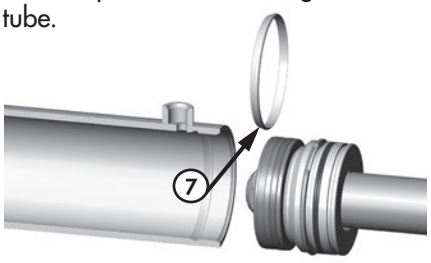

8. Remove locknut, piston and head from rod.

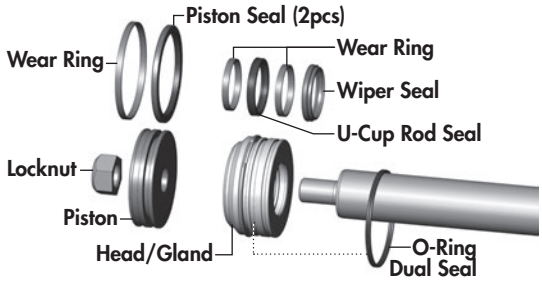

9. a) Inspect and replace all of the seals with new components.

   b) Inspect the inside of the cylinder barrel, piston, rod and other polished parts for burrs and scratches. Smooth areas as needed with an emery cloth.

   c) During re-assembly of head/gland assembly, leave the outer O-Ring Dual Seal loose on the rod to re-install at a later step.

10. Replace piston and torque the locknut to required value. (Refer to chart below)

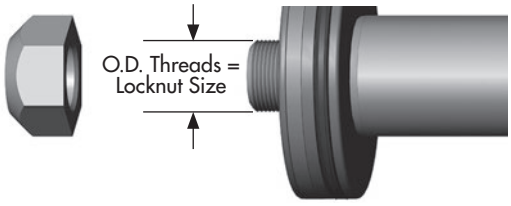

LOCKNUT SIZE (PISTON)	TORQUE VALUE
3/8 - 24 UNF	25-30 lb.ft (35-42 *N.m*)
1/2 - 20 UNF	**40-60 lb.ft *(55-80 N.m)***
5/8 - 18 UNF	95-105 lb.ft (130-140 *N.m*)
3/4 - 16 UNF	**175-225 lb.ft *(240-305 N.m)***
7/8 - 14 UNF	200-275 lb.ft (270-370 *N.m*)
1 - 14 UNF	**300-380 lb.ft *(405-515 N.m)***
1 1/8 - 12 UNF	400-500 lb.ft (540-675 *N.m*)
1 1/4 - 12 UNF	**500-600 lb.ft *(675-810 N.m)***
1 1/2 - 12 UNF	700-800 lb.ft (950-1085 *N.m*)
1 3/4 - 12 UNF	**800-900 lb.ft *(1085-1220 N.m)***

11. a) Install the supplied band clamp to compress the inner wire ring on the head/gland assembly so it will fit into the tube.

    Note: Make sure the cam of the band clamp is not overtop of the gap in the ring.

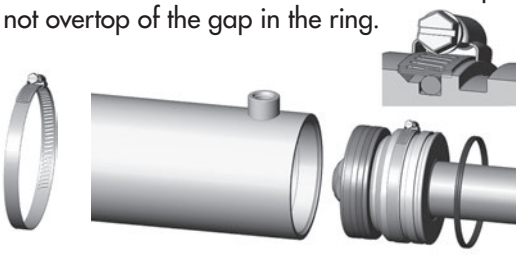

11. b) Tighten the band clamp to ensure the wire ring is fully seated. Then, loosen the clamp approx. 1/2 a turn to allow band clamp to slide during final assembly.

12. Lubricate the cylinder tube and piston seals.

13. Insert the piston into the tube. Tap the cylinder head into the tube until the clamp slides over and the inner wire ring is inside the tube.

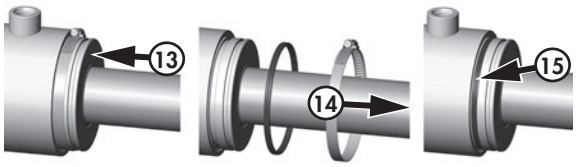

14. Loosen the clamp and remove.

15. Install the O-Ring Dual seal.

16. Tap the head the rest of the way until the end is flush with the tube.

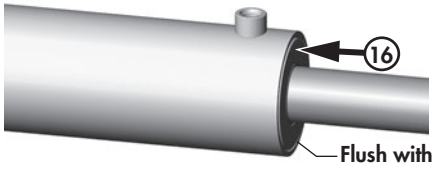

IMPORTANT: The head/gland must be inserted until it is flush with the tube to allow the inner wire ring to snap into its seated position in the internal cylinder groove. Failure to insert the head flush as shown will result in the head and rod assembly coming out of the tube when pressure is applied to the cylinder.

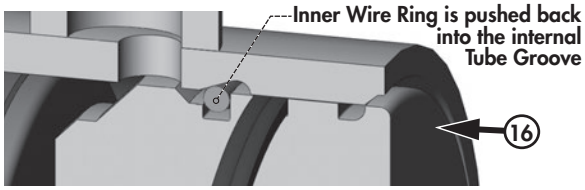

17. Pull the rod out to expose the external wire ring groove in cylinder head, and then install the external ring.

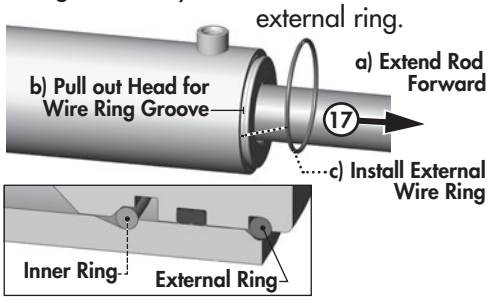

18. Before using the cylinder, ensure that you double check your work.

REPAIRING A THREADED HEAD CYLINDER

Set Screw Style

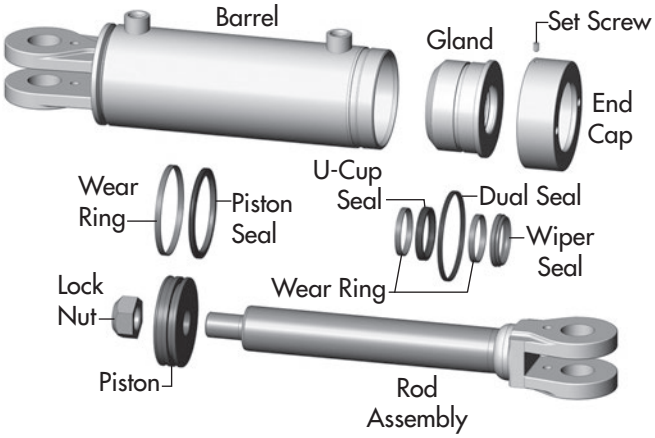

DISASSEMBLY

1. Loosen Set Screw and turn off end cap.
2. Carefully remove piston/rod/gland assemblies.
3. Disassemble the piston from the rod assembly by removing lock nut.

NOTE: *DO NOT* clamp rod by chrome surface.

4. Slide off gland assembly & end cap.
5. Remove seals and inspect all parts for damage.
6. Install new seals and replace damaged parts with new components.
7. Inspect the inside of the cylinder barrel, piston, rod and other polished parts for burrs and scratches. Smooth areas as needed with an emery cloth.

REASSEMBLY

1. Reinstall rod through end cap & gland assembly.
2. Secure piston to rod with lock nut. Torque lock nut to proper value (refer to chart on previous page for proper torque value).
3. Lube inside of barrel, piston seals, and gland seals with hydraulic oil.
4. With cylinder body held gently in a vise, insert piston, gland, end cap and rod combination using a slight rocking motion.
5. Apply Loctite anti-seize before installing cylinder end cap.
6. Torque cylinder end cap to 440 lb.ft (600 N.m).
7. Tighten Set Screw on end cap to 6 lb.ft (8 N.m).

STORAGE

The PRO-TILL should be carefully prepared for storage to ensure that all dirt, mud, debris and moisture has been removed.

Follow this procedure when preparing to store:

1. Wash the entire machine thoroughly using a water hose or pressure washer to remove all dirt, mud, debris or residue.
2. Inspect all parts to see if anything has become entangled in them. Remove entangled material.
3. Lubricate all grease fittings to remove moisture (except spherical bearings).
4. Inspect all hydraulic hoses, fittings, lines and couplers. Tighten any loose fittings. Replace any hose that is badly cut, nicked or abraded or is separating from the crimped end of the fitting.
5. Touch up all paint nicks and scratches to prevent rusting.
6. Select an area that is dry, level and free of debris.
7. Store in either Transport or Field position.
8. Use hydraulic cylinder jack.
9. Oil any exposed chrome shafts on the hydraulic cylinders to prevent rusting.

SAFETY DECALS & REFLECTORS

Keep safety decals and signs clean and legible at all times. Replace safety decals and signs that are missing or have become illegible. Safety decals or signs are available from your Dealer Parts Department.

142556 - Decal, Reflector Red - 2 x 9	**(2)**
142557 - Decal, Reflector Amber - 2 x 9	**(4)**
142650 - Decal, Fluorescent - 2 x 9	**(2)**
142963 - Decal, Danger-Neg Tongue Weight	**(2)**
142964 - Decal, Warning-Machine Runaway	**(2)**
142965 - Decal, Danger-Crushing Hazard	**(2)**
142966 - Decal, Warning-Pinch Point	**(2)**
142789 - Decal, Warning-Float Cylinders-lg	**(1)**
142969 - Decal, Warning-Float Cylinders-sm	**(4 or 2)**
142788 - Decal, Warning-Constant Pressure	**(0 or 2)**
142689 - Decal, Warning-Fully Extend	**(2)**
143162 - Decal, Important-Read Manual	**(1)**
142975 - Decal, Hydraulic Hose Label	**(1)**
142976 - Decal, Front Disc Depth - Loc 2	**(1)**
142977 - Decal, Front Disc Depth - Loc 3	**(1)**
142978 - Decal, Rear Disc Depth - Loc 1	**(1)**
142979 - Decal, Rear Disc Depth - Loc 4	**(1)**
142008 - Decal, Degelman - 6″	**(3)**
143198 - Decal, Degelman - 8-1/4″	**(1)**
142961 - Decal, Pro-Till 33 - 4″	**(2)**
142962 - Decal, Pro-Till 33 - 7″	**(2)**
142949 - Decal, Pro-Till 40 - 4″	**(4)**
142950 - Decal, Pro-Till 40 - 7″	**(2)**

Pro-Till Overview

Exploded Overview of a Pro-Till 40

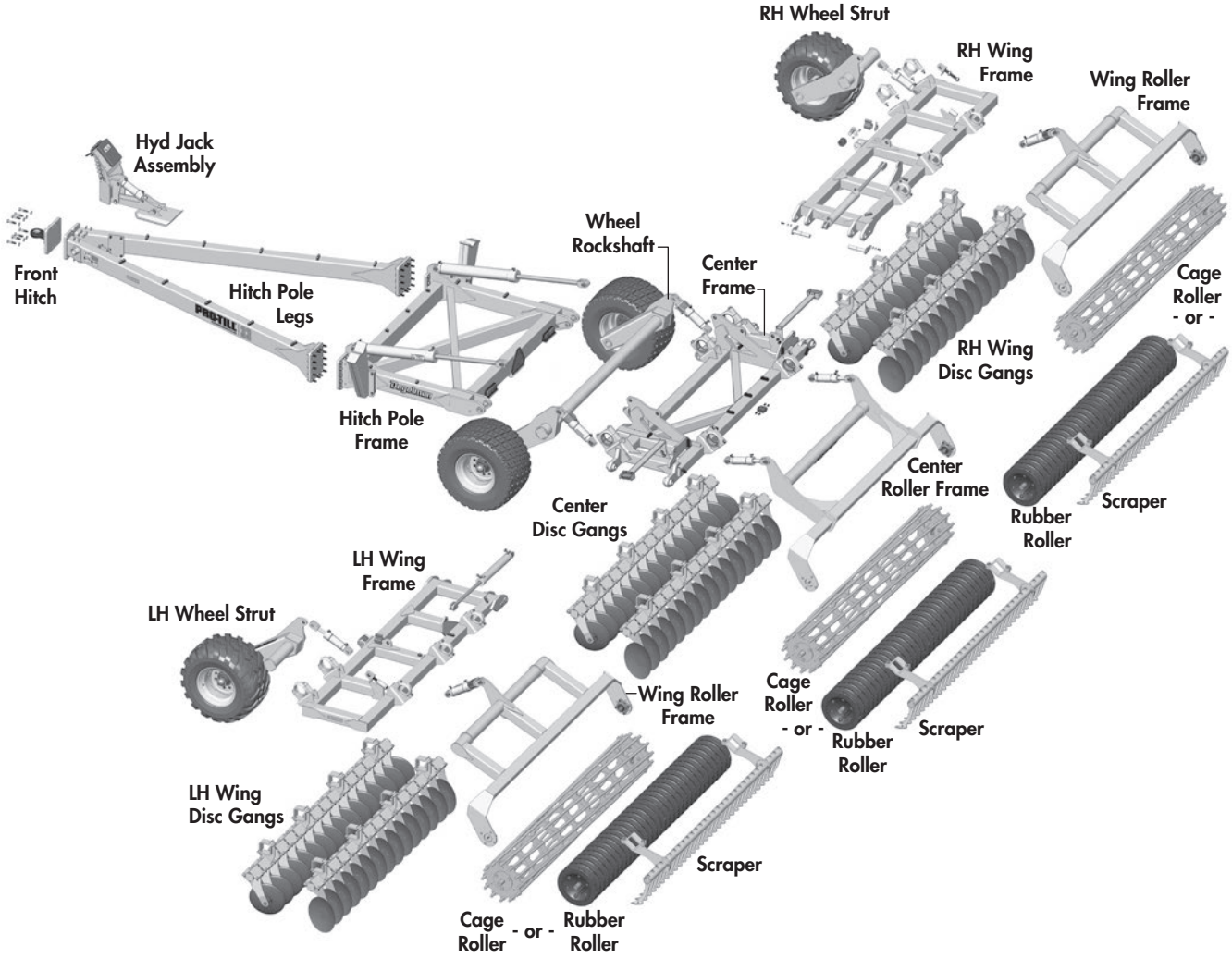

Hitch Pole / Front Frame Components

Hitch Pole/Front Frame Overview

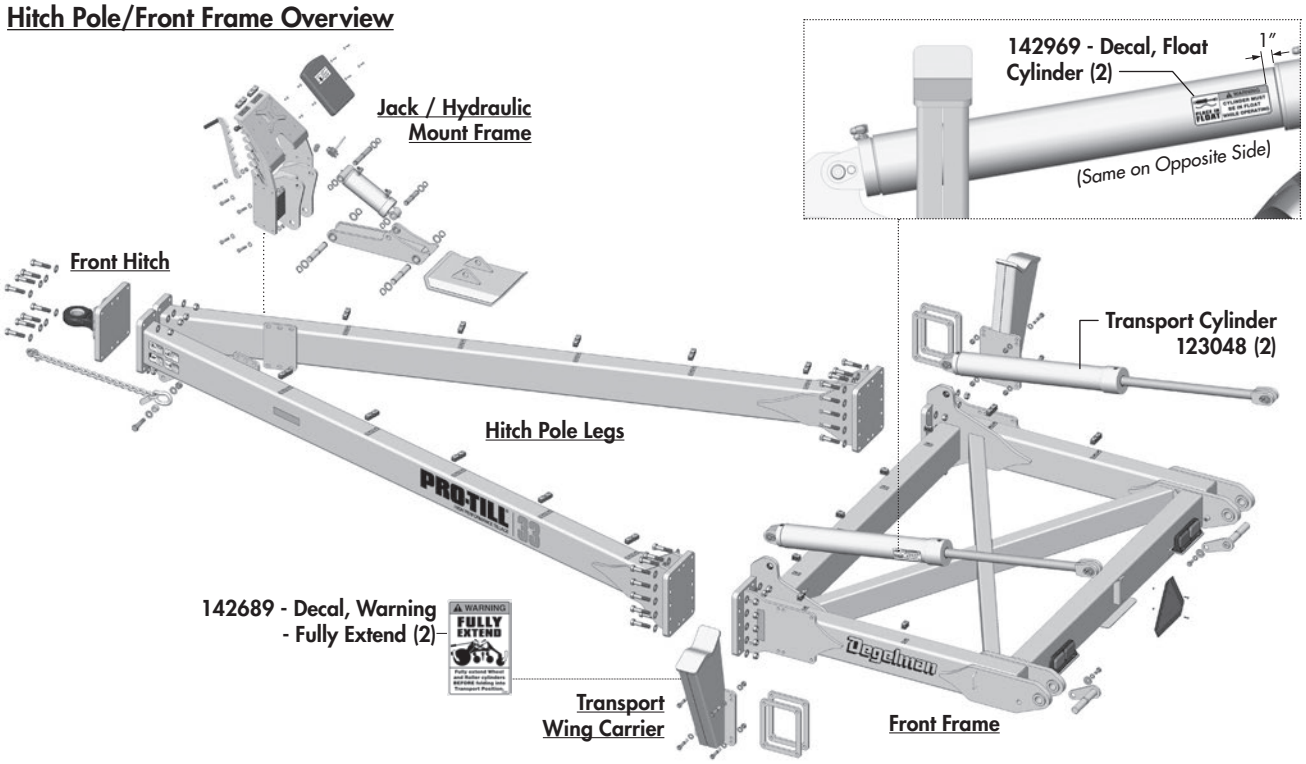

Front Frame Components

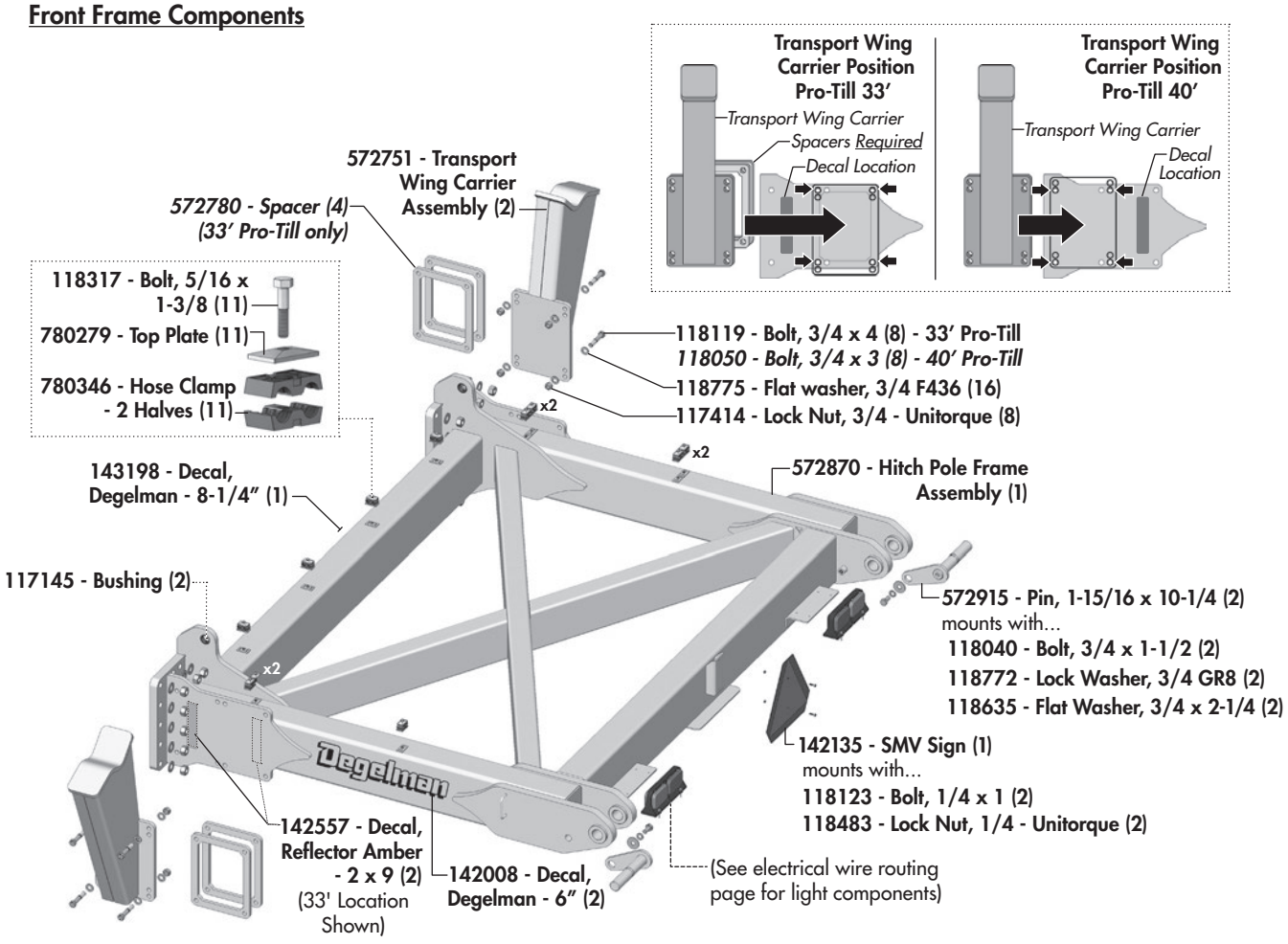

Hitch Pole Frame Components

Jack/Hydraulic Mount Frame Detail

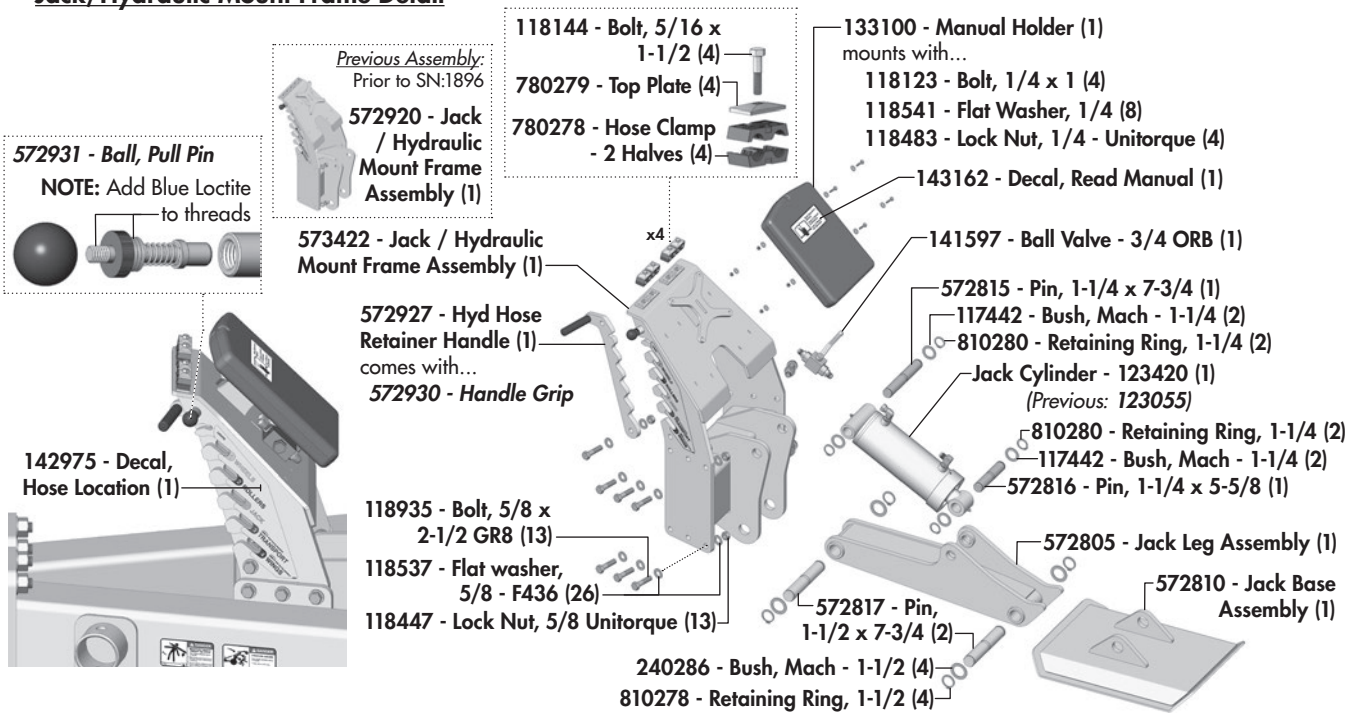

Hitch Pole Components

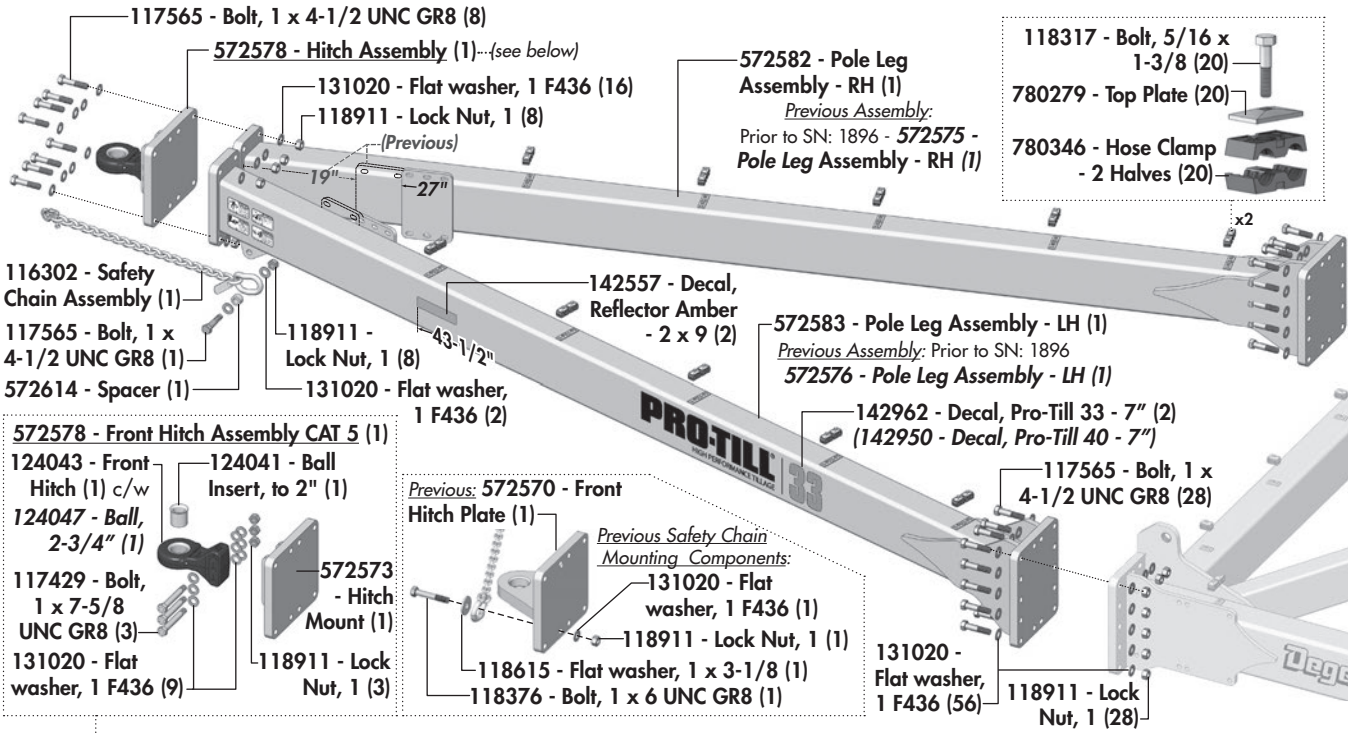

Wheel & Rockshaft Components

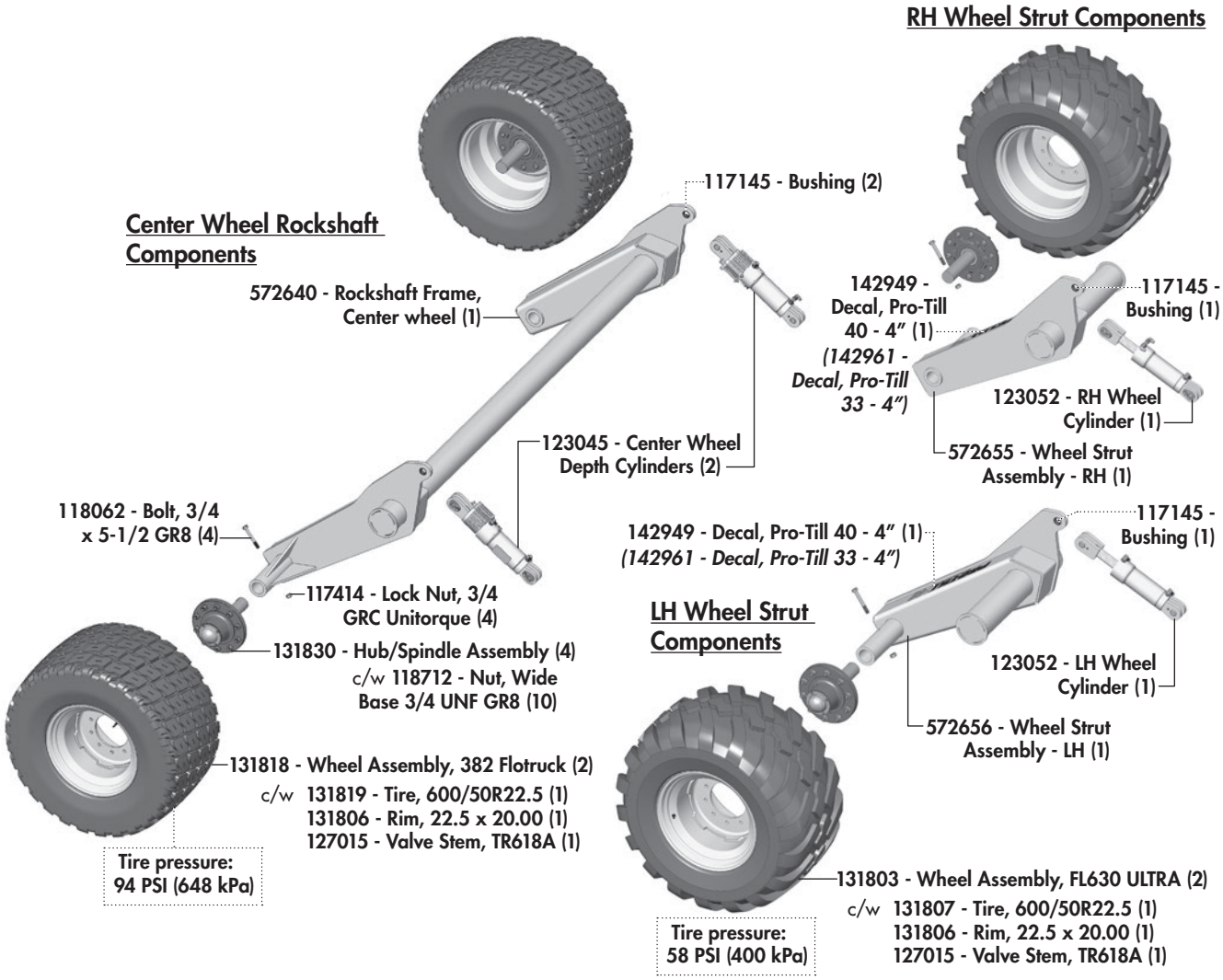

131830 - Hub/Spindle Assembly (4)

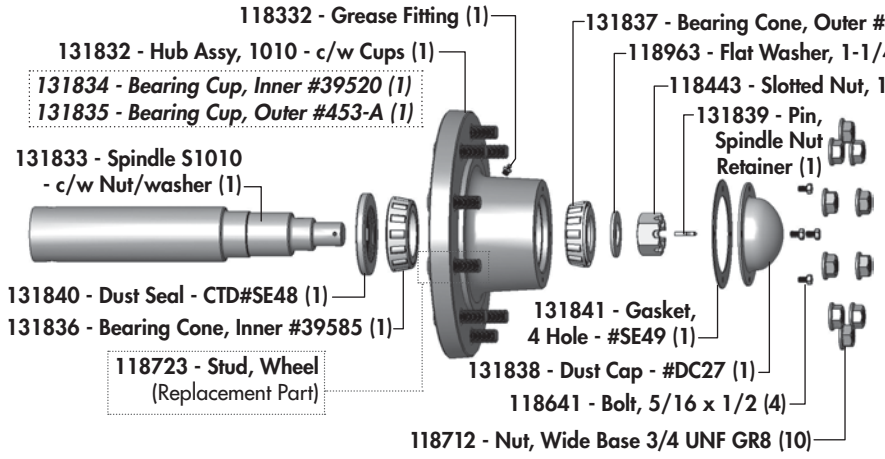

Wheel Nut Torque
3/4": 280-300 lb.ft
(380-405 N.M)

Bolt Pattern

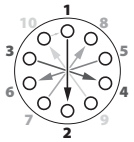

10 BOLT PATTERN

Center Frame & Center Roller Frame Components

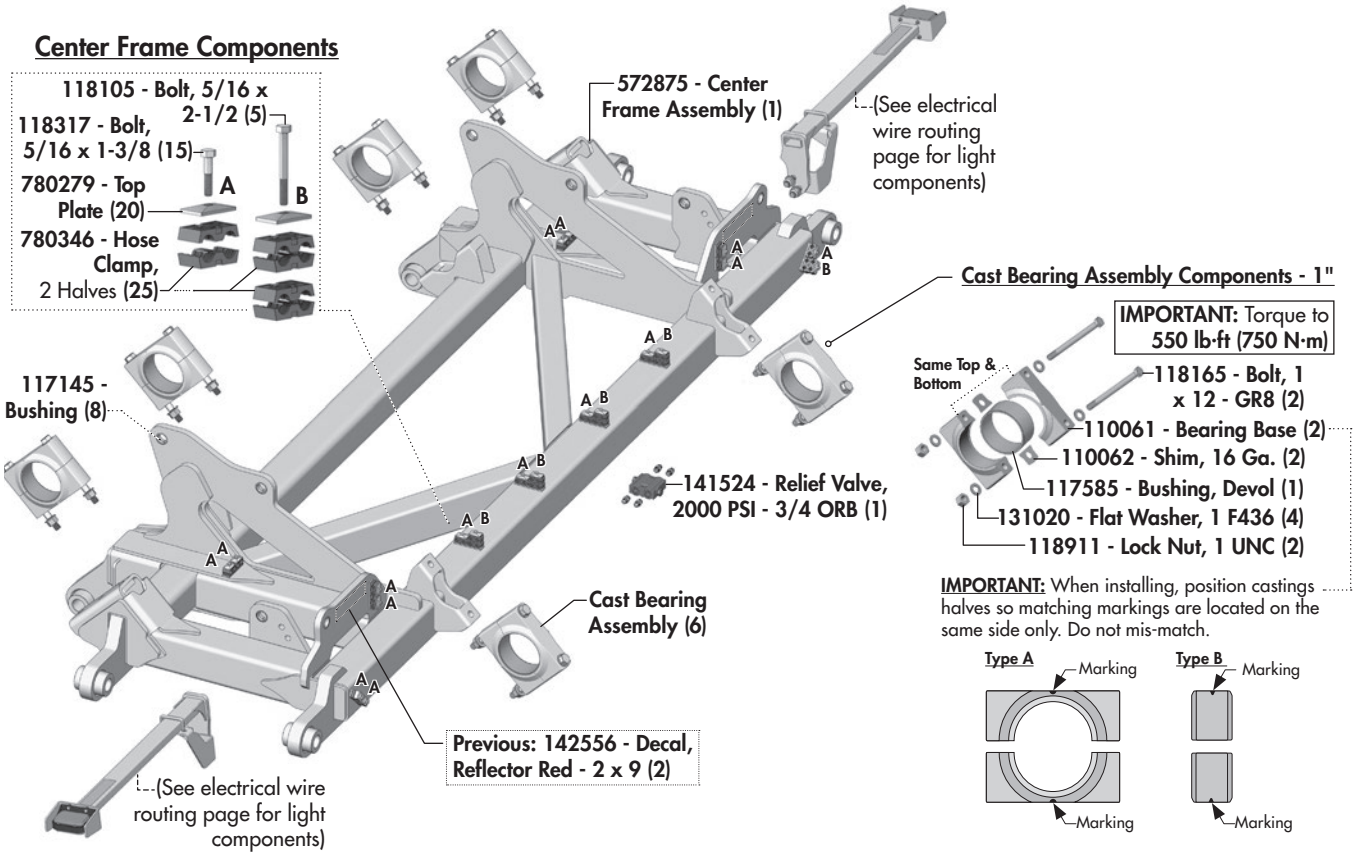

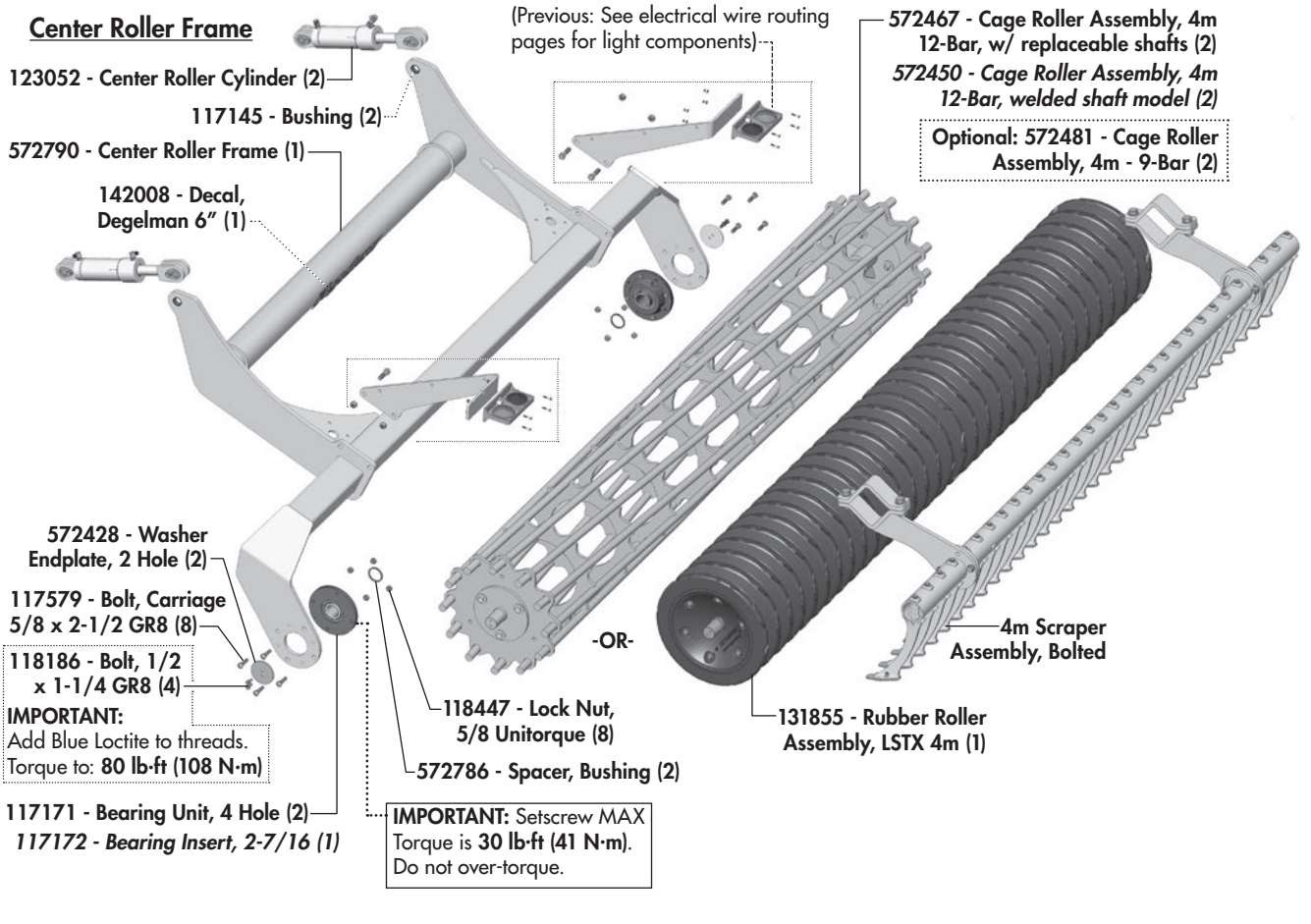

Wing Frame Components
(LH Shown)

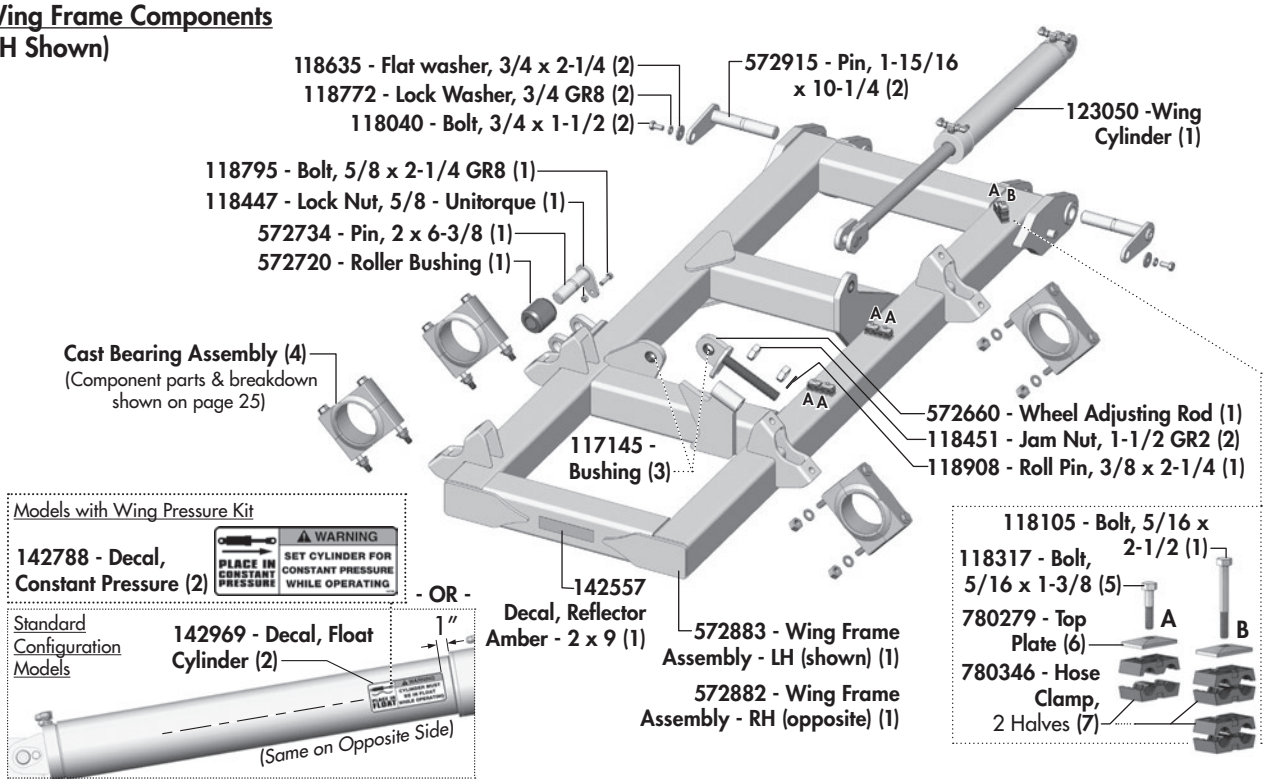

Wing Roller Frame Pro-Till 33
(LH Shown)

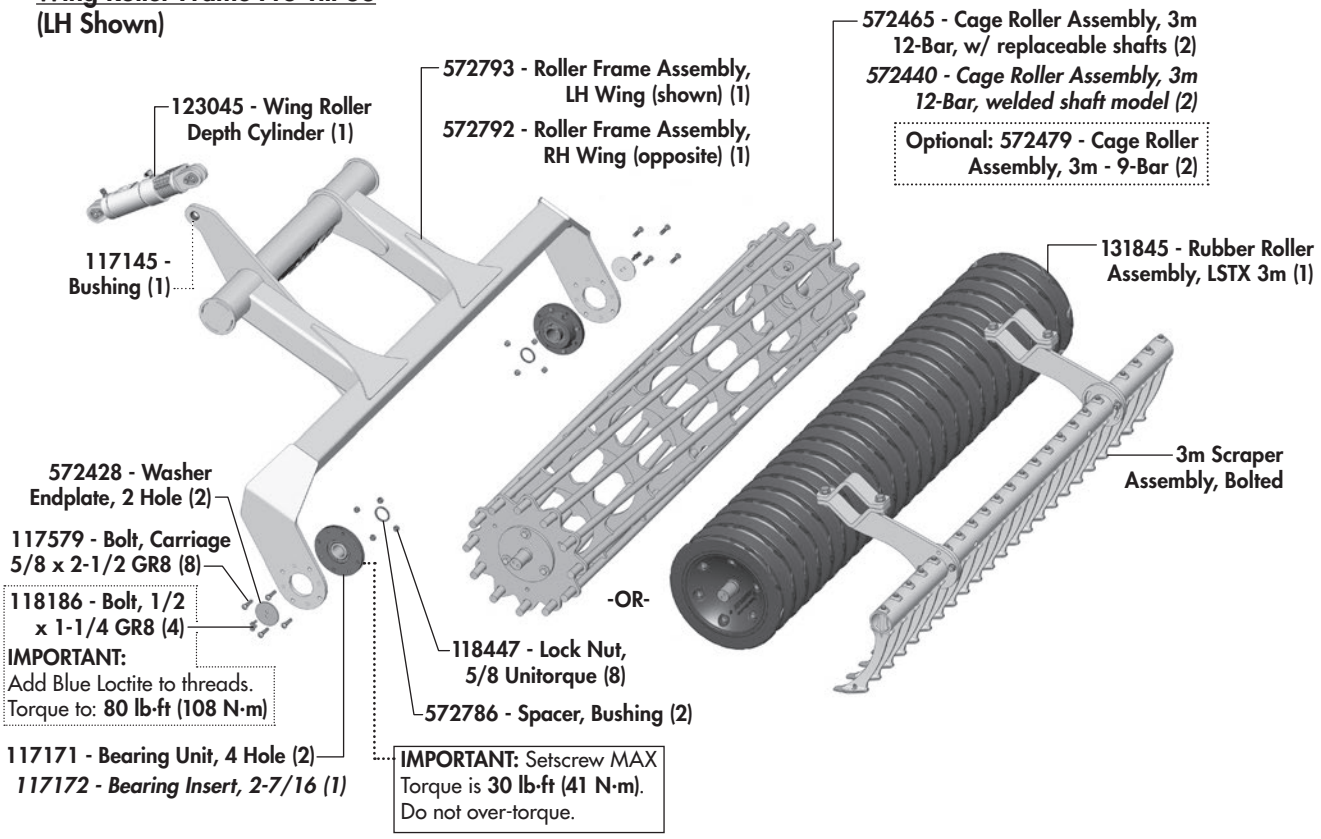

Wing Frame Components
(LH Shown)

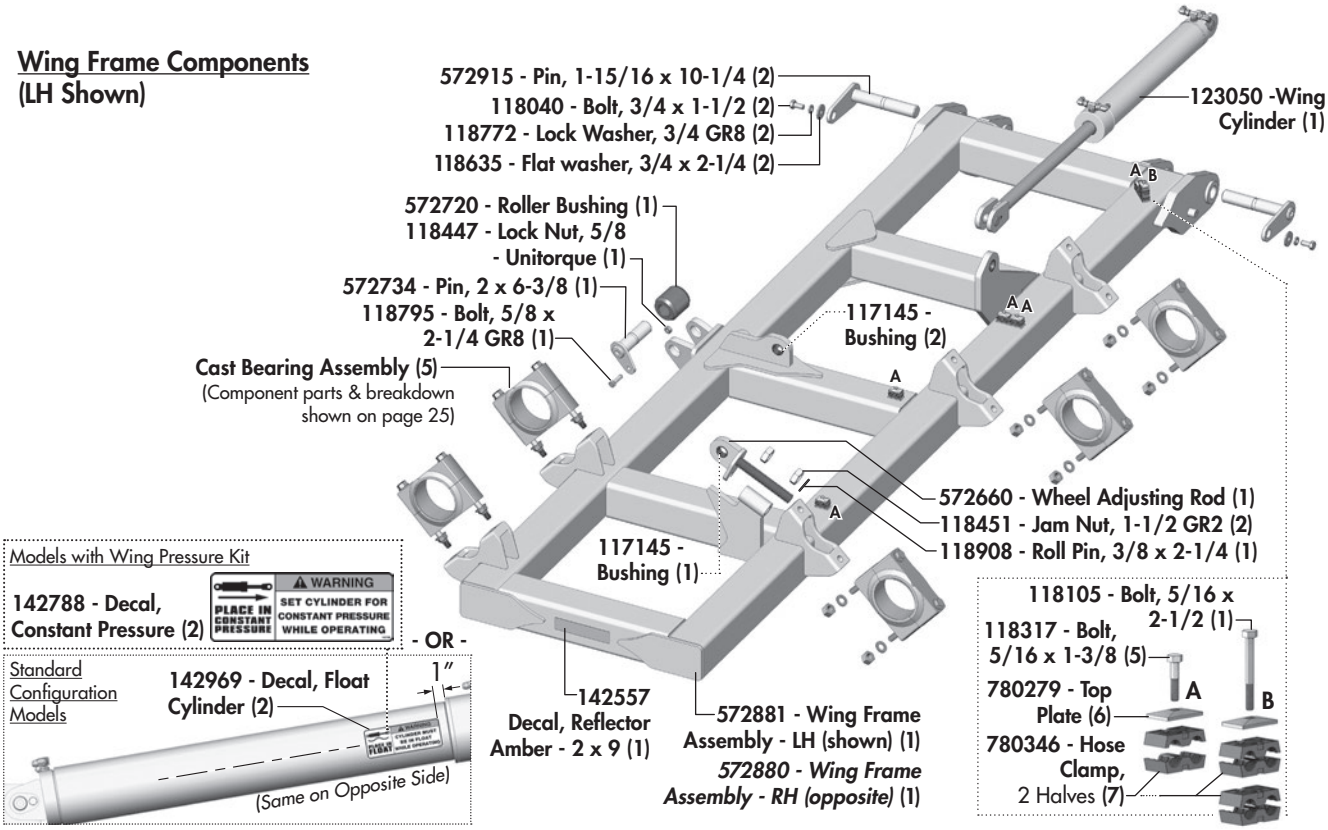

Wing Roller Frame Pro-Till 40
(RH / LH)

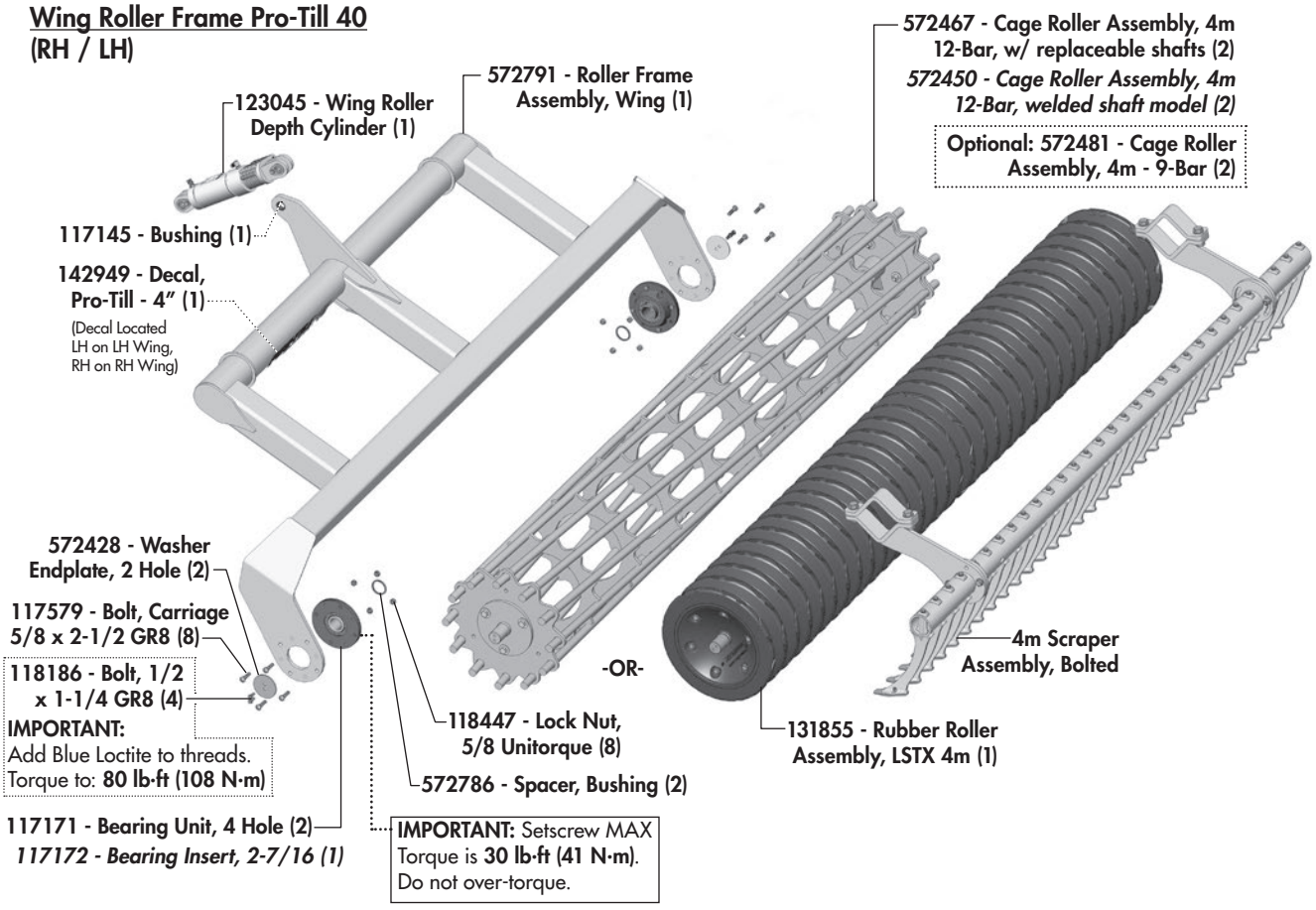

Wing Frame Components
(LH Shown)

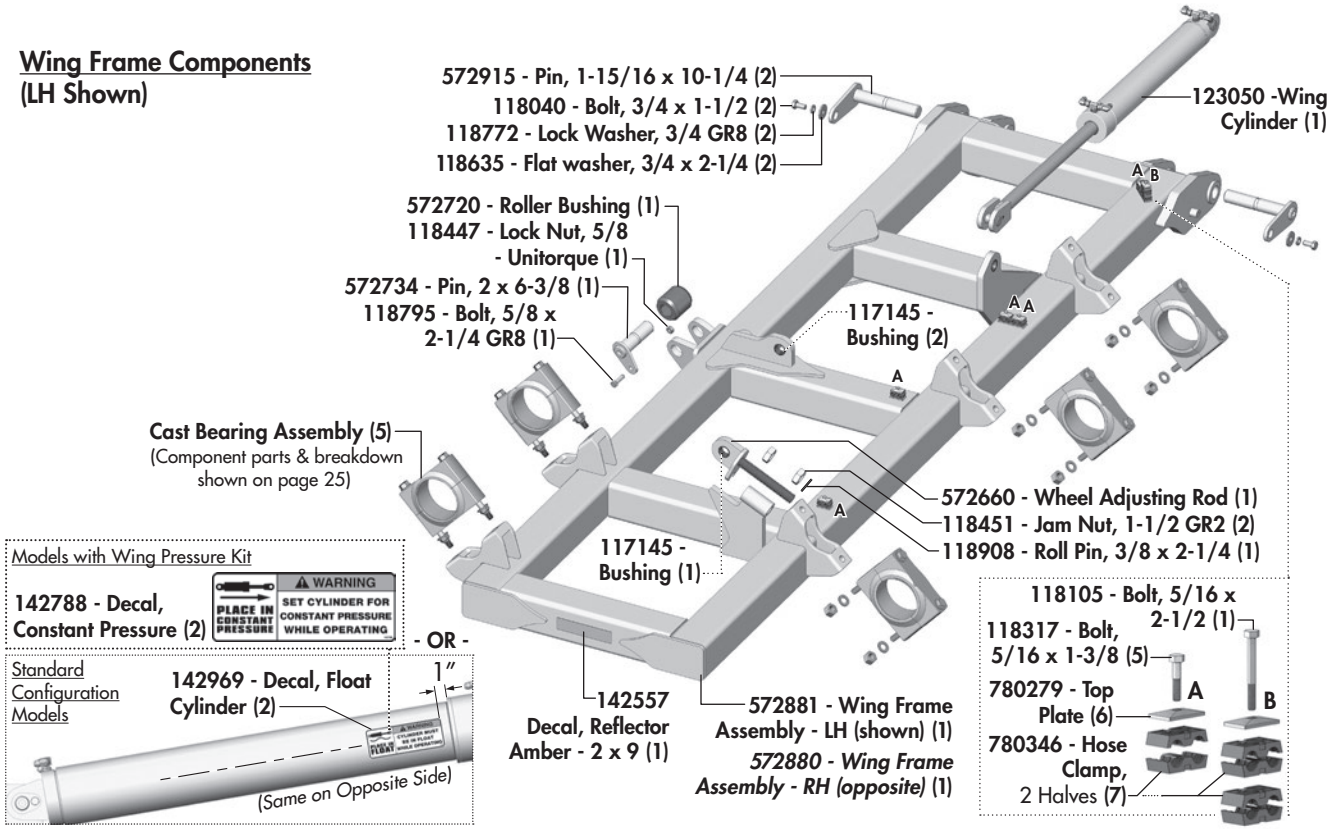

Wing Roller Frame Pro-Till 40 Controlled Traffic
(RH / LH)

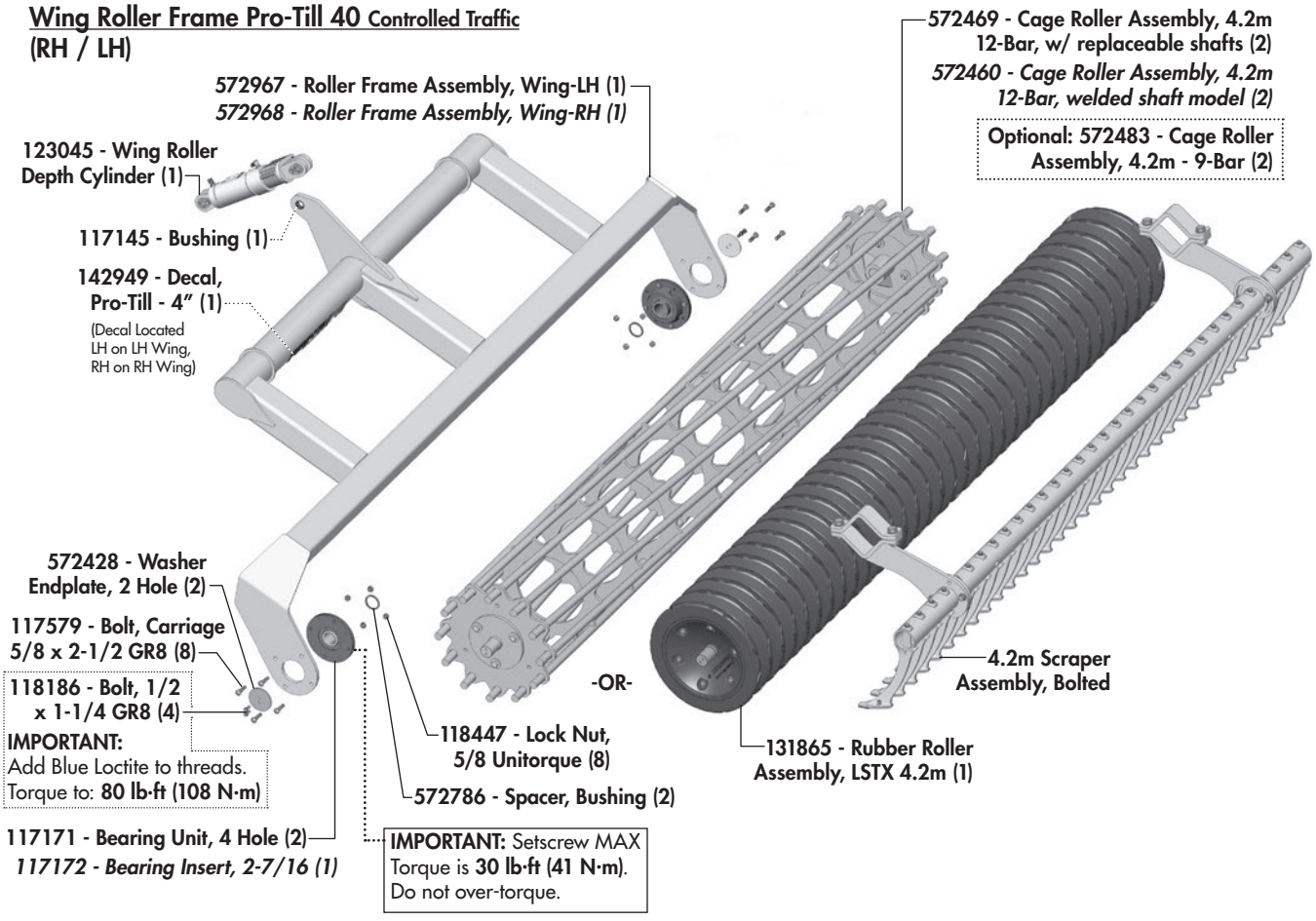

Roller Components

Roller Assembly Overview

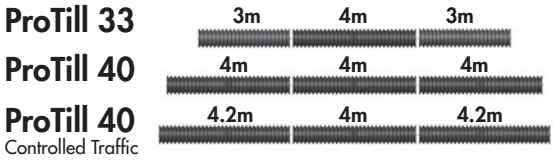

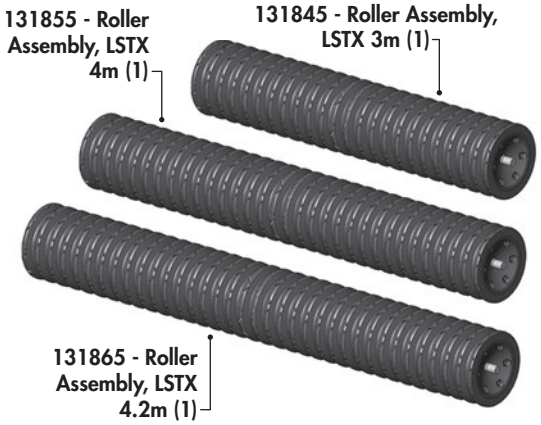



Rubber Roller Common End Assembly Components

131896 - Repair Toolkit (1)
(required for removal of endplate)

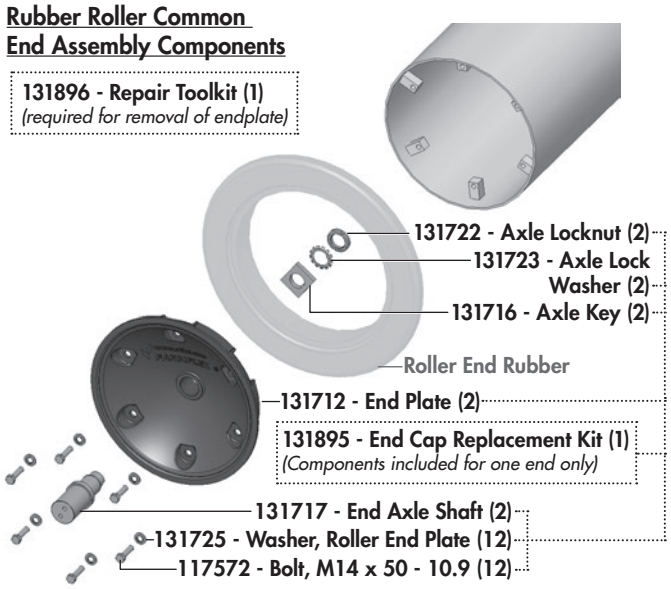

Cage Roller Part Components

572468 - 12 Bar - 4.2m (1)
572466 - 12 Bar - 4m (1)
572464 - 12 Bar - 3m (1)

572482 - 9 Bar - 4.2m (1)
572480 - 9 Bar - 4m (1)
572478 - 9 Bar - 3m (1)

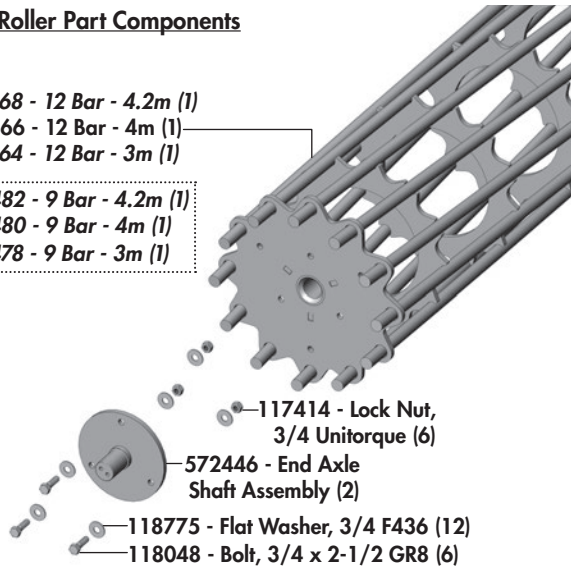

Ridge Wiper Components

Knocks down the possible ridge of dirt left from buildup in between the rollers.

573385 - Ridge Wiper Kit (1)
- 2 Kits Required per machine

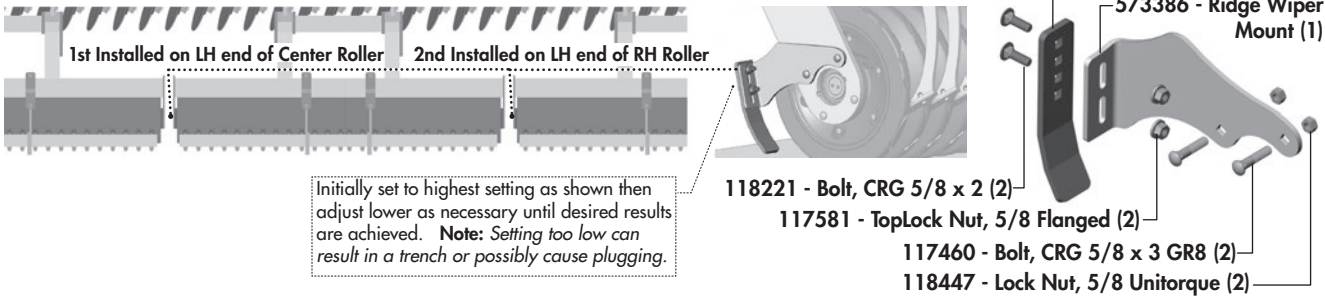

Initially set to highest setting as shown then adjust lower as necessary until desired results are achieved. **Note:** *Setting too low can result in a trench or possibly cause plugging.*

Scraper Components

Scraper Section Overview

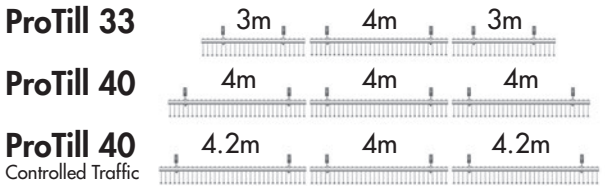

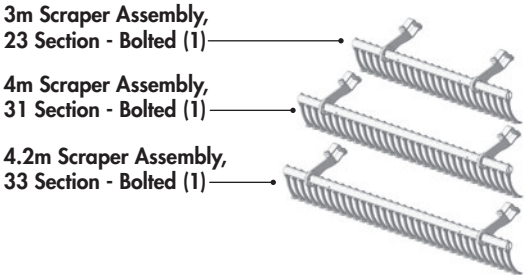

Scraper Section Component Overview

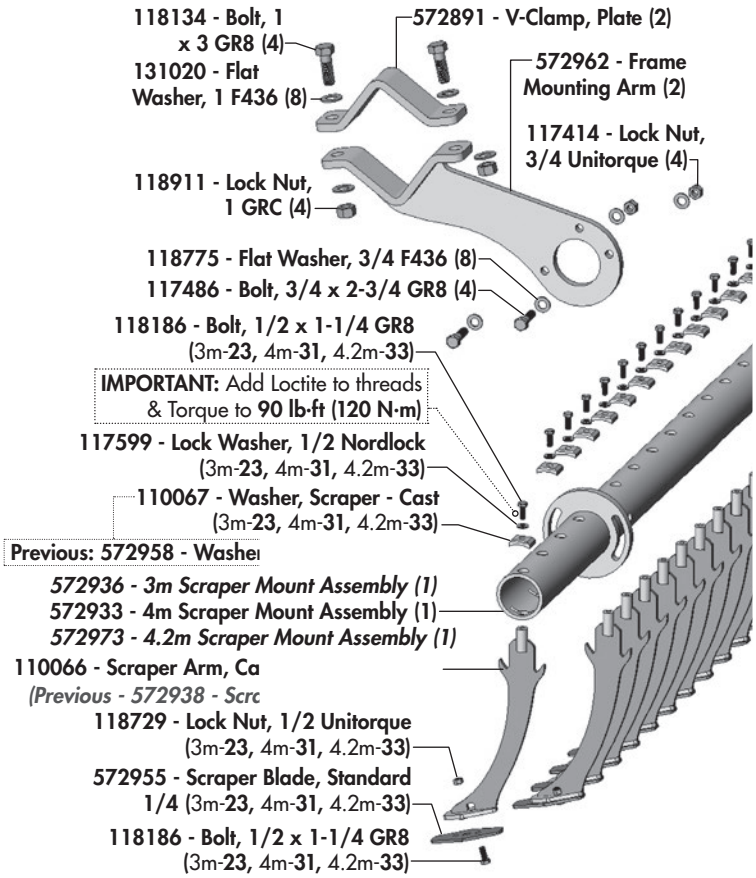

Previous: Pinned Scraper Mounting Components

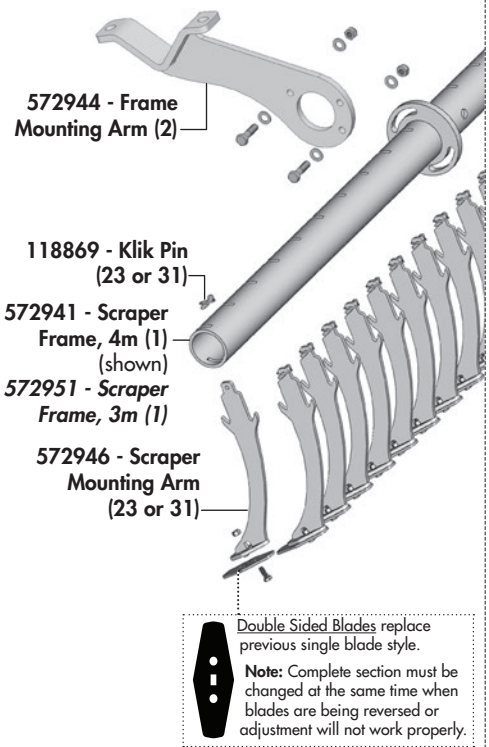

Double Sided Blades replace previous single blade style.

Note: Complete section must be changed at the same time when blades are being reversed or adjustment will not work properly.

Standard - Scraper Blade Kits - c/w Bolts & Locknuts.

33' Kit: 572675 (Set of 77) **40' Kit**: 572750 (Set of 93)

Scraper Blade Replacement Options

Heavy Duty Replacement Scraper Blades

requires new hardware (Bolts & Locknuts)

Note: *Replacement part only. Works best only after roller has been run and has relaxed into its permanent shape.*

Must purchase by QTY:
ProTill 33': **77** ProTill 40': **93** or ProTill 40' CT: **97**

573320 - Scraper Blade, HD - 3/8
118279 - Bolt, 1/2 x 1-1/2 GR8
118729 - Lock Nut, 1/2 Unitorque



Max-Life



Max-Life Replacement Scraper Blades

requires new hardware (Locknuts)

Kits: 33': 572652 (Set of 77) **40'**: 572653 (Set of 93)

572957 - Scraper Blade, Max-Life - 1/4
118186 - Bolt, 1/2 x 1-1/4 GR8
118729 - Lock Nut, 1/2 Unitorque

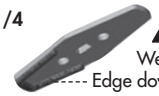

Scraper Position Overview

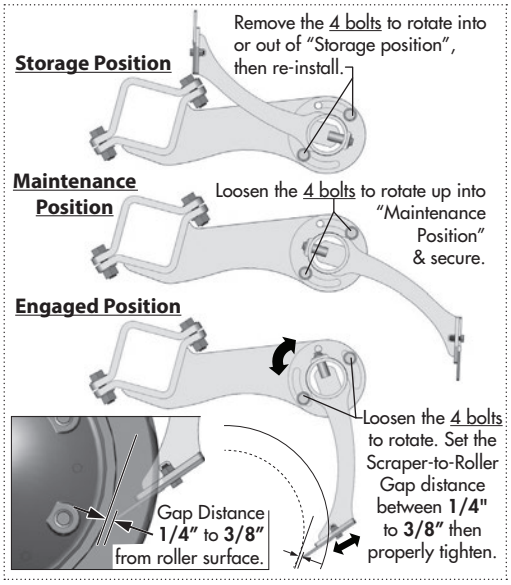

Disc Gang Components - Pro-Till 33 (10m)

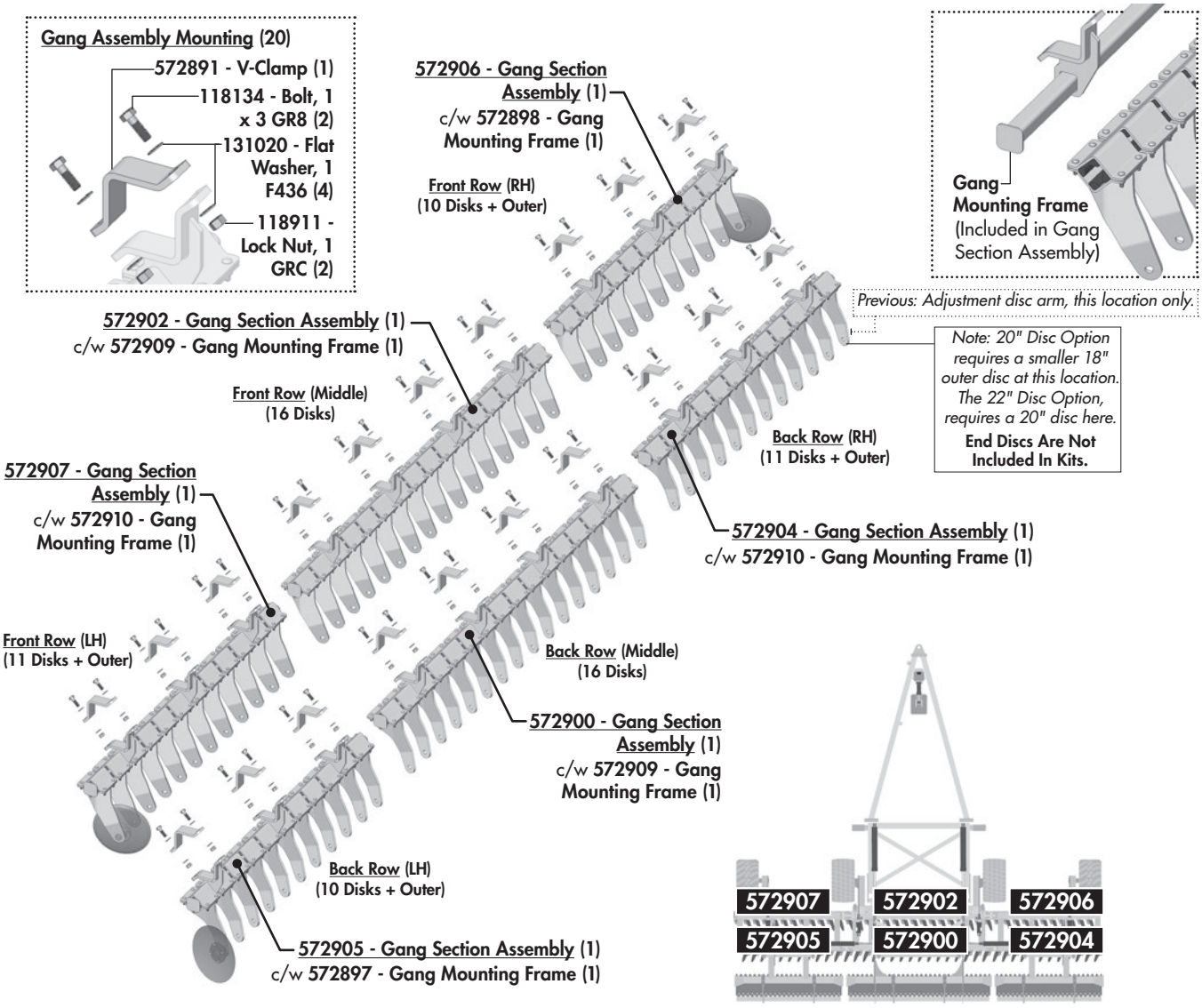

Setting Gang Section Spacing - Overview

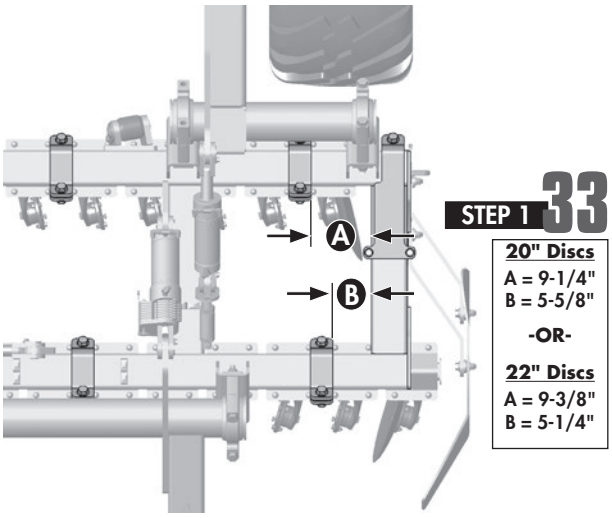

1. Gang section spacing starts by setting the distance from the inside RH Wing Frame to the edge of the first V-Clamp on front & rear gang sections. *(Measurements - **A** & **B** in diagram).*
2. Then, the distance between the *left* endcap of the first gang section and the *right* endcap of the next gang section should be set to 1-1/2". This should be the standard distance between all gang sections.

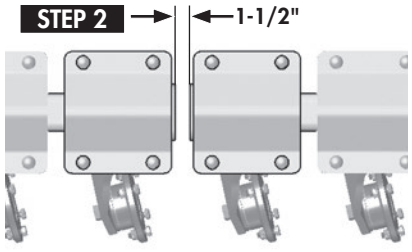

Disc Gang Components - Pro-Till 40 (12m)

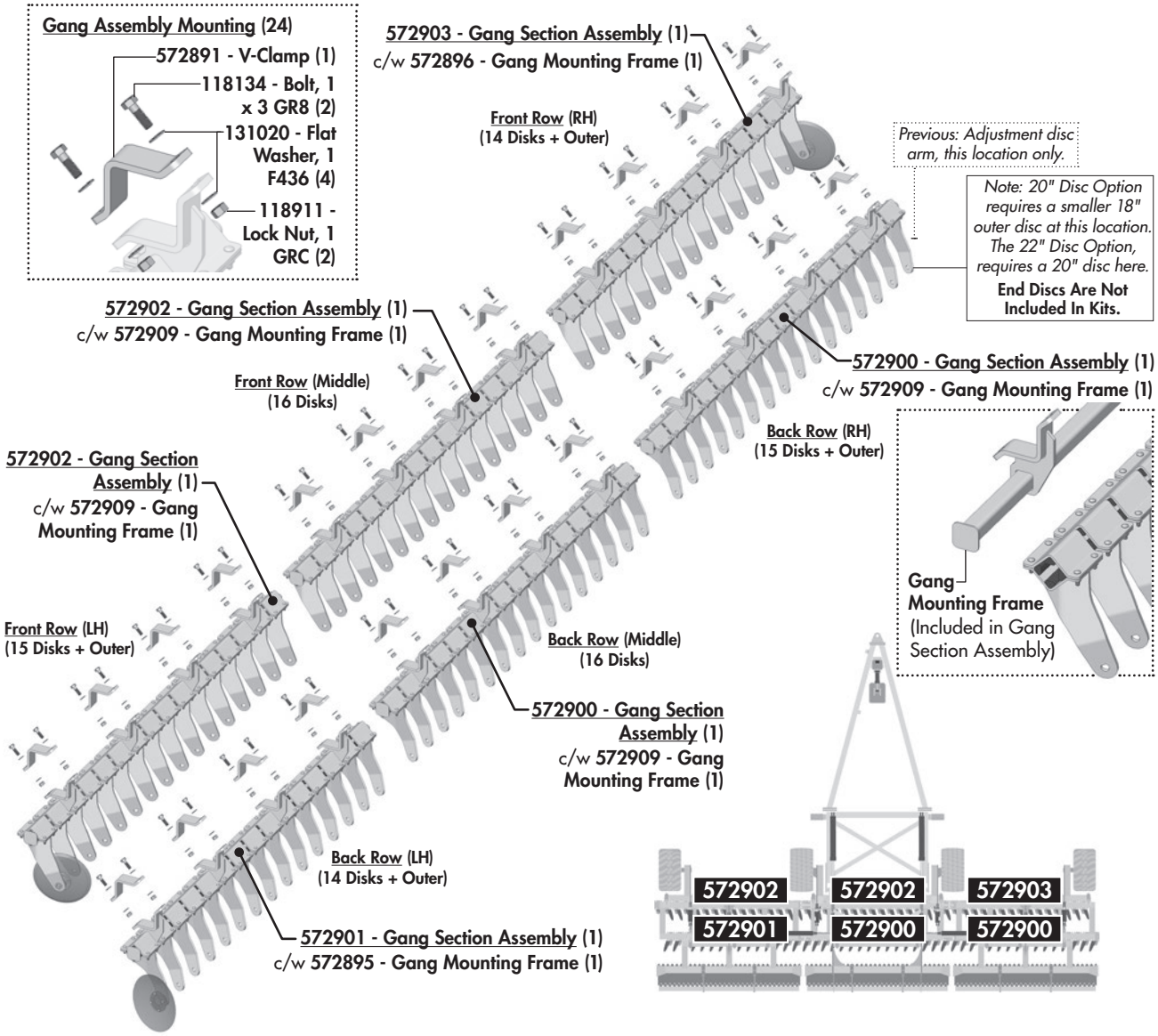

Setting Gang Section Spacing - Overview

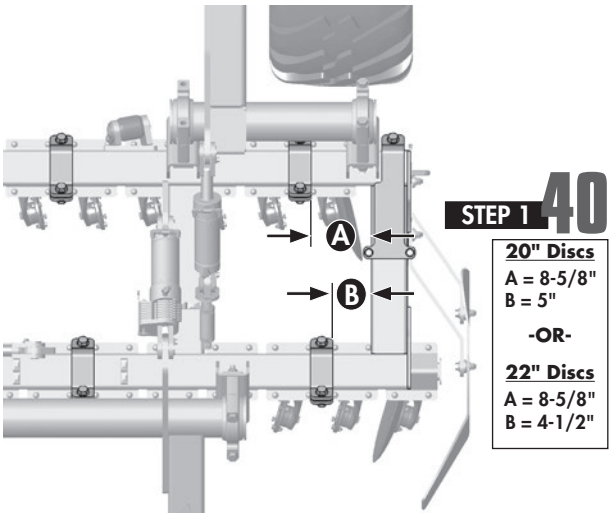

1. Gang section spacing starts by setting the distance from the inside RH Wing Frame to the edge of the first V-Clamp on front & rear gang sections.
   (Measurements - **A** *&* **B** *in diagram).*
2. Then, the distance between the *left* endcap of the first gang section and the *right* endcap of the next gang section should be set to 1-1/2". This should be the standard distance between all gang sections.

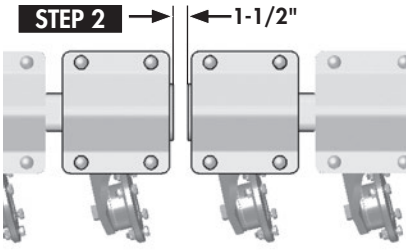

Disc Gang Components - Pro-Till 40 Controlled Traffic (12.5m)

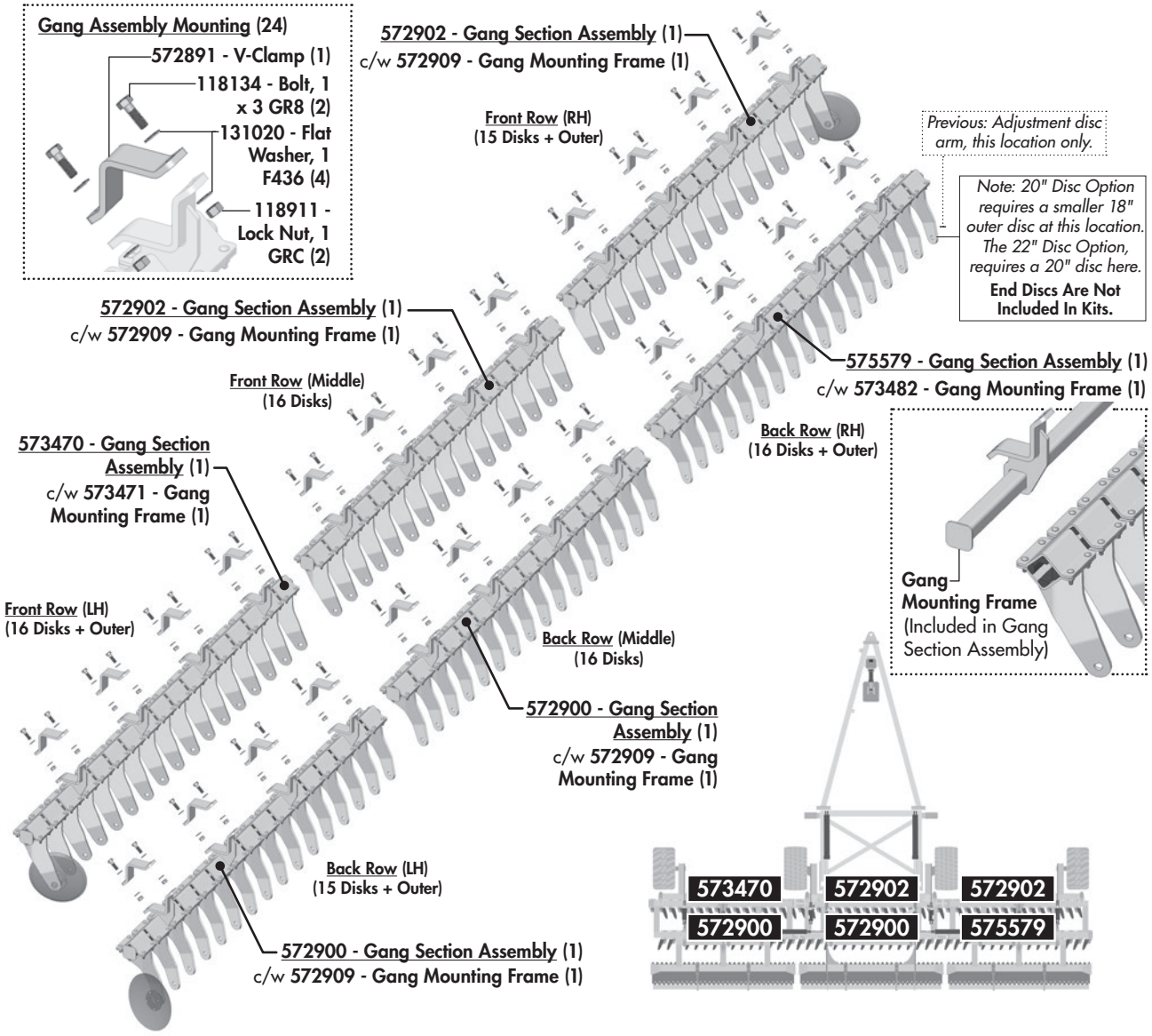

Setting Gang Section Spacing - Overview

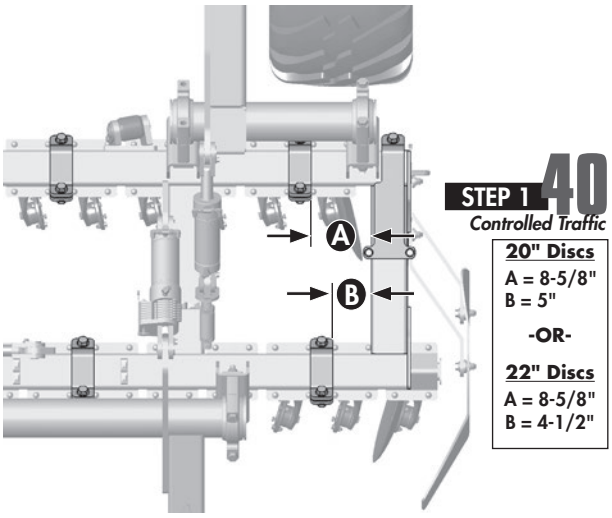

1. Gang section spacing starts by setting the distance from the inside RH Wing Frame to the edge of the first V-Clamp on front & rear gang sections.
   (Measurements - **A** *&* **B** *in diagram).*
2. Then, the distance between the *left* endcap of the first gang section and the *right* endcap of the next gang section should be set to 1-1/2". This should be the standard distance between all gang sections.

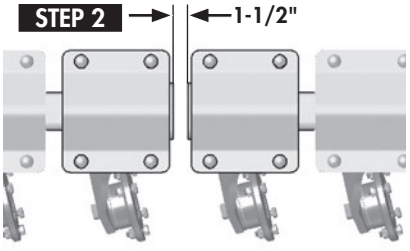

Disc Arm Components & Disc Options

Front Row - Standard Disc Assembly Components

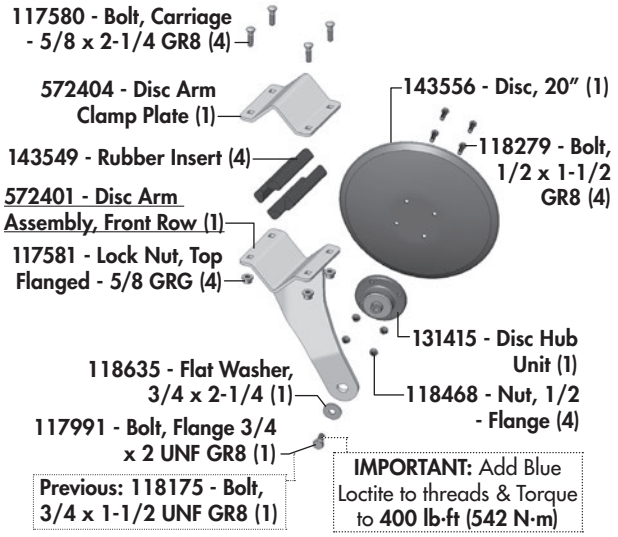

Back Row - Standard Disc Assembly Components

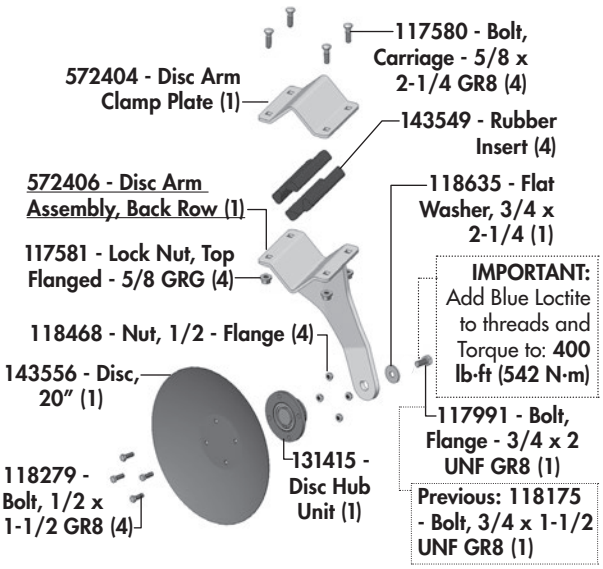

Disc Hub Components

131415 - Disc Hub Unit (Varied Suppliers) - *Replacement O-Rings*

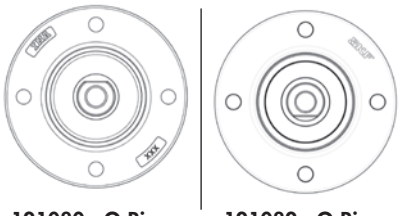

Adjustment Disc Arm Components

(Models with Adjustment Disc Arm on Rear Row - RH outer)

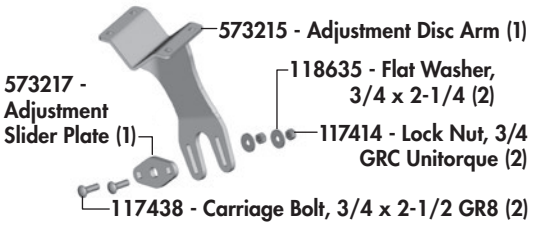

Discs/Hubs - Required Numbers Per Machine

33' Pro-Till Requires **78** Discs/Hubs
40' Pro-Till Requires **94** Discs/Hubs
40' CT Pro-Till Requires **98** Discs/Hubs



IMPORTANT: *Safely secure Pro-Till in winged forward transport position when changing or servicing discs.*

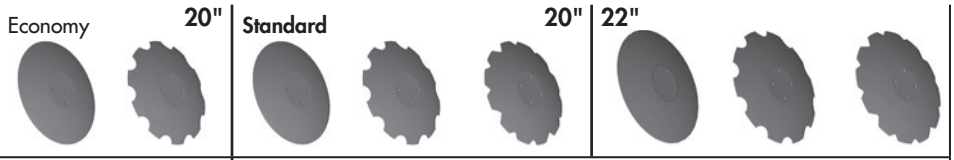

Economy Discs		Premium Discs					
20" Straight	20" *Notched*	20" Straight	20" *Notched*	20" *Double-V Notched*	22" Straight	22" *Notched*	22" *Double-V Notched*
143567	*143568*	*143556*	*143557*	*143553*	*143562*	*143563*	*143566*

Typical Factory Settings of End Discs

20" Disc Option

143550 - **18"** End Disc - Straight **(1)**
Located as outer disc on rear RH corner only.

22" Disc Option

143556 - **20"** End Disc - Straight **(1)**
Located as outer disc on rear RH corner only.

(**Note**: Customers may wish to adjust the end disc sizes and locations for customer preferred performance in certain soil or field conditions.)

Hydraulic Cylinders

Hydraulic Cylinders

Transport :	**123048 - Cylinder - 5-1/2 x 42 x 2-1/2**	(Seal Kit: **123047**)
Wheel / Roller :	**123052 - Cylinder - 3-3/4 x 8 x 2**	(Seal Kit: **123051**)
with **Depth Adjust :**	**123045 - Cylinder - 4-1/4 x 8 x 2**	(Seal Kit: **123046**)
Wing :	**123050 - Cylinder - 4 x 28 x 2** - Threaded	(Seal Kit: **123079**)
	123050 - Cylinder - 4 x 28 x 2 - Wire Ring	(Seal Kit: **123049**)
Jack :	**123420 - Cylinder - 4-1/2 x 8 x 2**	(Seal Kit: **123214**)
(Previous:	*123055 - Cylinder - 4 x 8 x 2*	*(Seal Kit: 123049)*

Cylinder Pins - Transport

Requires: **123562 - Pin, 1-1/2 x 3-1/4 (2)**
118924 - Flat Washer, .59 ID x .9 OD (2)
118796 - Bolt, Shoulder - 1/2 GR8 UNC (2)



Cylinder Pins - Wheel/Roller, Depth, & Wing

Require: **122670 - Pin, 1-1/2 x 2-3/4 (2)**
118924 - Flat Washer, .59 ID x .9 OD (2)
118796 - Bolt, Shoulder - 1/2 GR8 UNC (2)



Cylinder Locations

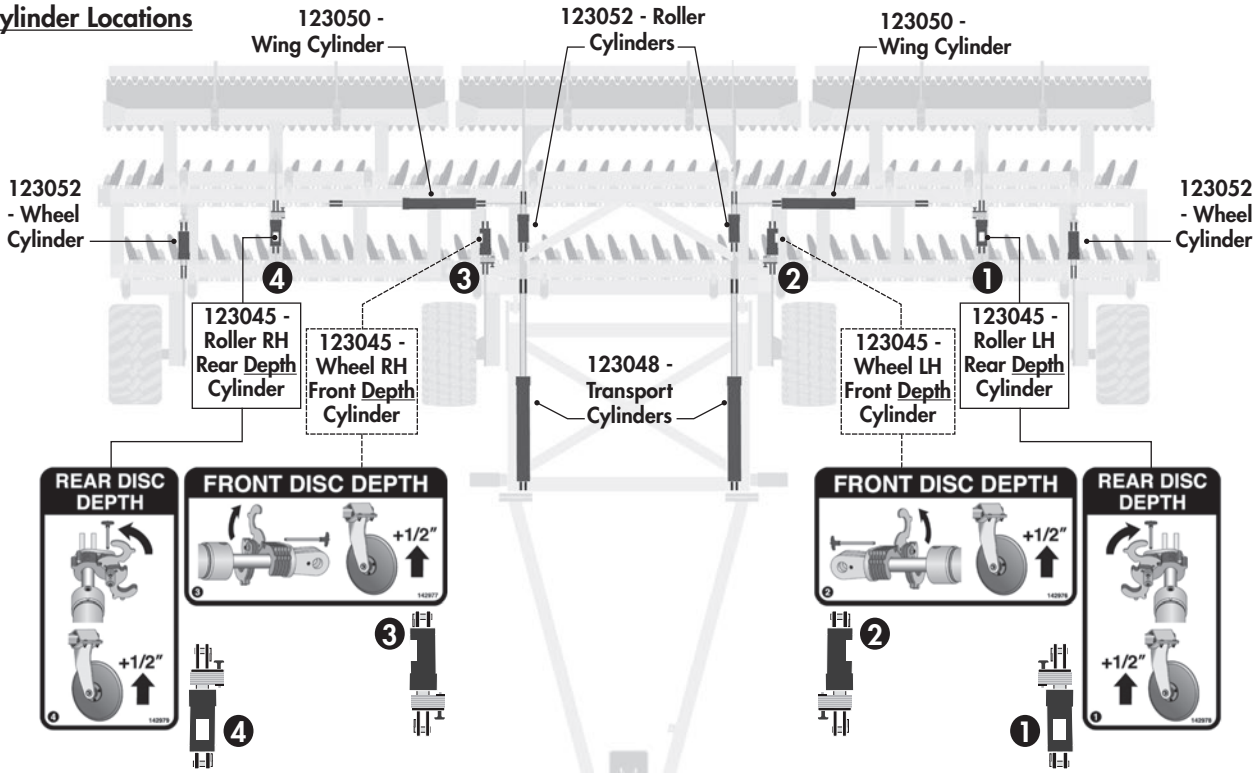

123420 - Jack Cylinder

123045 - Cylinder, Monarch, 4-1/4 x 8 x 2 (1)
(Seal Kit: 123046)

Depth Stop Cylinder Decals

Location

1. **142978 - Decal, Rear Disc Depth (1)**
2. **142976 - Decal, Front Disc Depth (1)**
3. **142977 - Decal, Front Disc Depth (1)**
4. **142979 - Decal, Rear Disc Depth (1)**

Depth Stop Components

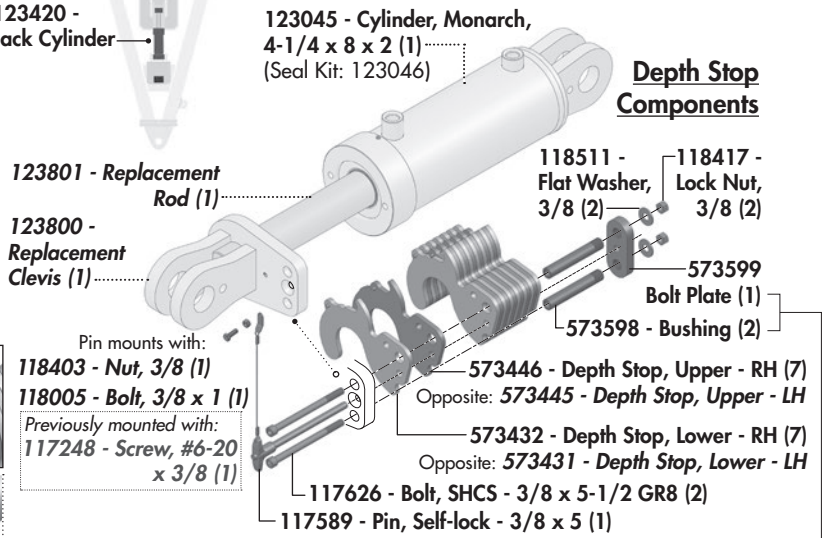

Depth Stop Configurations

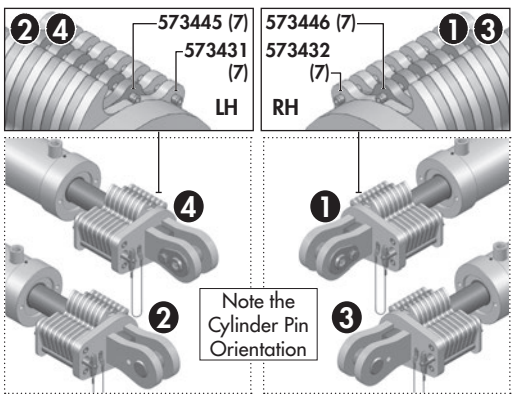

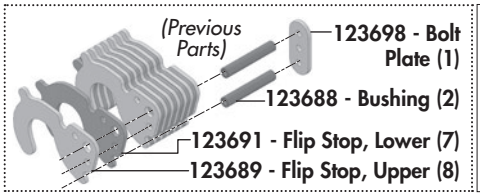

(**Note**: Factory height setting of the threaded bushing / bolt plate bushing distance is set by using the stack of depth plates and a gap clearance of less than 1/32")

Hydraulic Fittings Required

1	141581 - Quick Coupler-m - 3/4 ORB	(2)	
2	141676 - Nipple, 3/4 ORB-m	(2)	
3	141684 - Coupler, Green (+)	(1)	
4	141685 - Coupler, Green (-)	(1)	
5	141515 - Connector, 3/4 JIC-m x ORB	(2)	
6	141504 - Elbow, 90° 3/4 JIC m x ORB m	(5)	(6)
7	141505 - Tee, 3/4 JIC m x m x 3/4 ORB m	(3)	(2)
8	141518 - 90° Elbow, 3/4 JIC-m x 3/4 JIC-f-sw	(5)	(3)
9	126702 - Wrap, Hose/Cable - 24"	(2)	
10	141503 - Tee, 3/4 JIC-f-sw x m x m	(1)	
11	141679 - Nipple, 3/4 ORB m x 3/4 ORB m-adj	(2)	
12	141560 - Elbow, 90° 3/4 JIC m x 9/16 ORB m	(2)	
13	126756 - Hose, 3/8 x 7-1/2	(2)	
14	141735 - Hydraulic Check Valve	(2)	

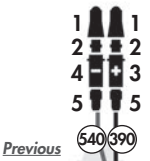

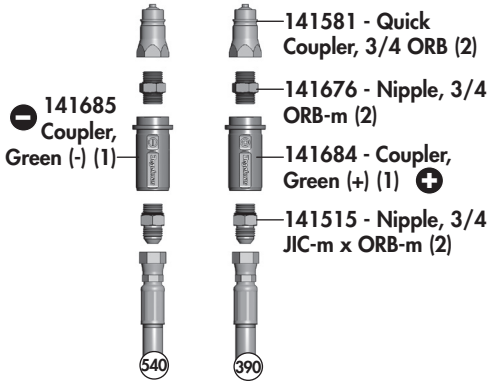

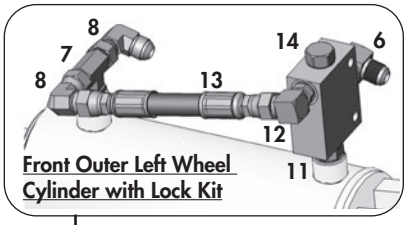

Front Outer Left Wheel Cylinder with Lock Kit

Required Hoses for Wheel Cylinders

540	126497 - Hose, 3/8 x 540	(1)
408	126492 - Hose, 3/8 x 408	(1)
390	126491 - Hose, 3/8 x 390	(1)
168	126486 - Hose, 3/8 x 168	(3)

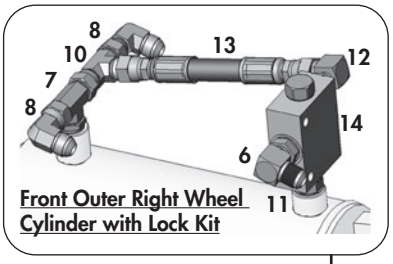

Front Outer Right Wheel Cylinder with Lock Kit

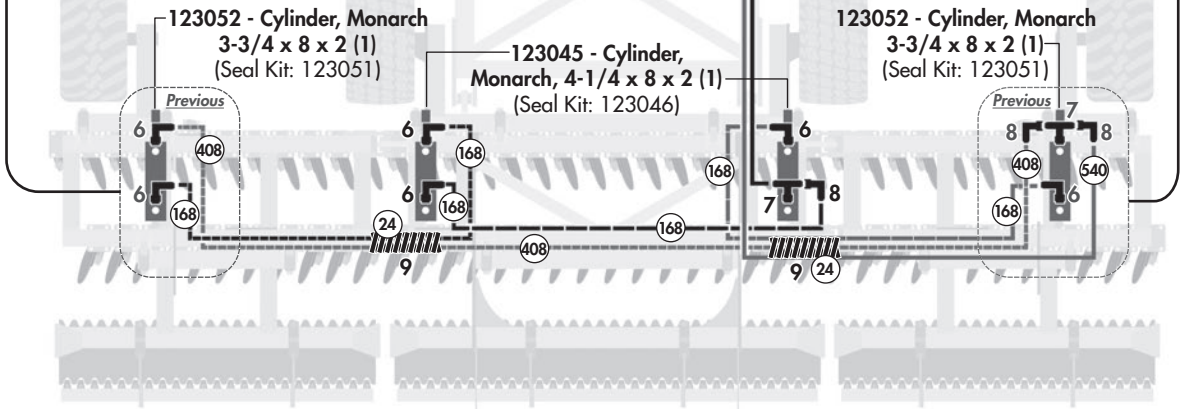

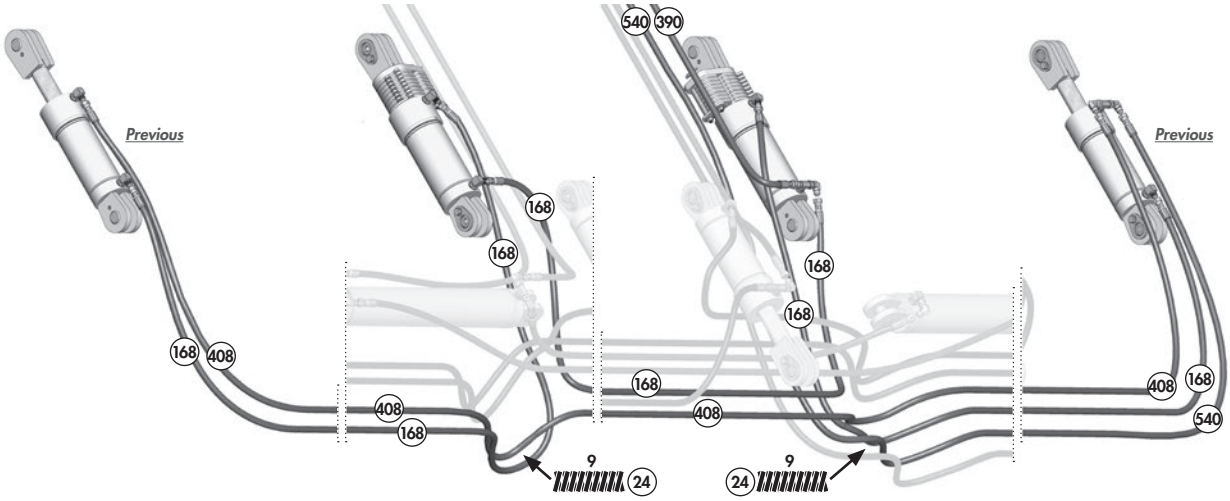

Hydraulic Fittings Required

1	141581 - Quick Coupler-m - 3/4 ORB	(2)	
2	141676 - Nipple, 3/4 ORB-m	(2)	
3	141684 - Coupler, Green (+)	(1)	
4	141685 - Coupler, Green (-)	(1)	
5	141515 - Connector, 3/4 JIC-m x ORB	(2)	
6	141504 - Elbow, 90° 3/4 JIC m x ORB m	(5)	(6)
7	141505 - Tee, 3/4 JIC m x m x 3/4 ORB m	(3	(2)
8	141518 - 90° Elbow, 3/4 JIC-m x 3/4 JIC-f-sw	(5)	(3)
9	126702 - Wrap, Hose/Cable - 24"	(2)	
10	141503 - Tee, 3/4 JIC-f-sw x m x m	(1)	
11	141679 - Nipple, 3/4 ORB m x 3/4 ORB m-adj	(2)	
12	141560 - Elbow, 90° 3/4 JIC m x 9/16 ORB m	(2)	
13	126756 - Hose, 3/8 x 7-1/2	(2)	
14	141735 - Hydraulic Check Valve	(2)	

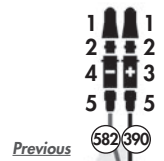

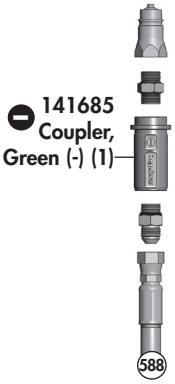

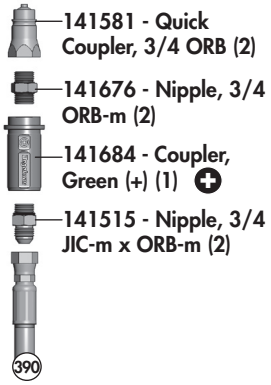

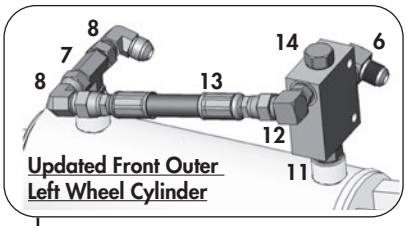

Required Hoses for Wheel Cylinders

582	126498 - Hose, 3/8 x 582	(1)
480	126494 - Hose, 3/8 x 480	(1)
390	126491 - Hose, 3/8 x 390	(1)
192	126488 - Hose, 3/8 x 192	(2)
168	126486 - Hose, 3/8 x 168	(1)

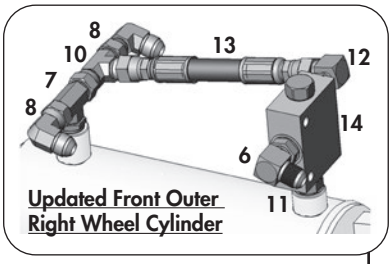

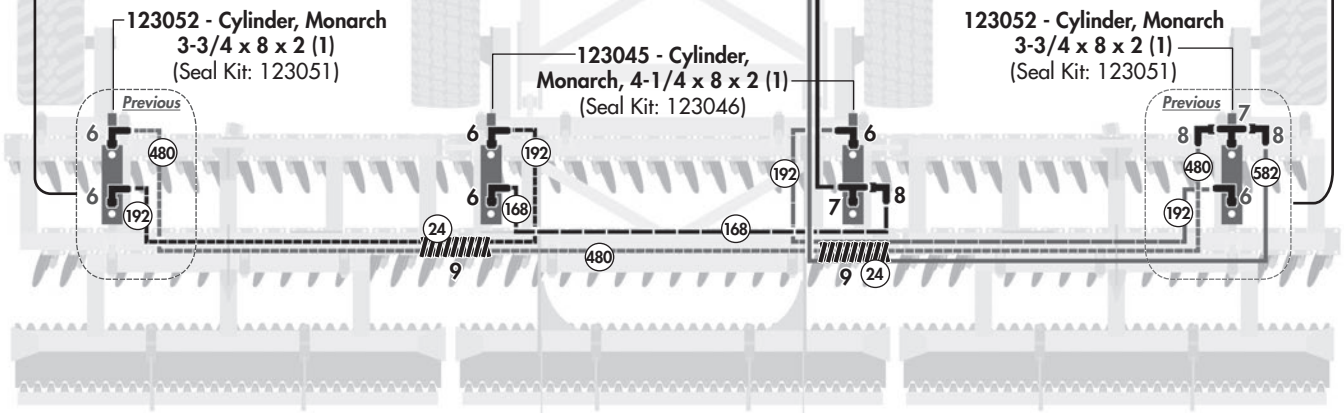

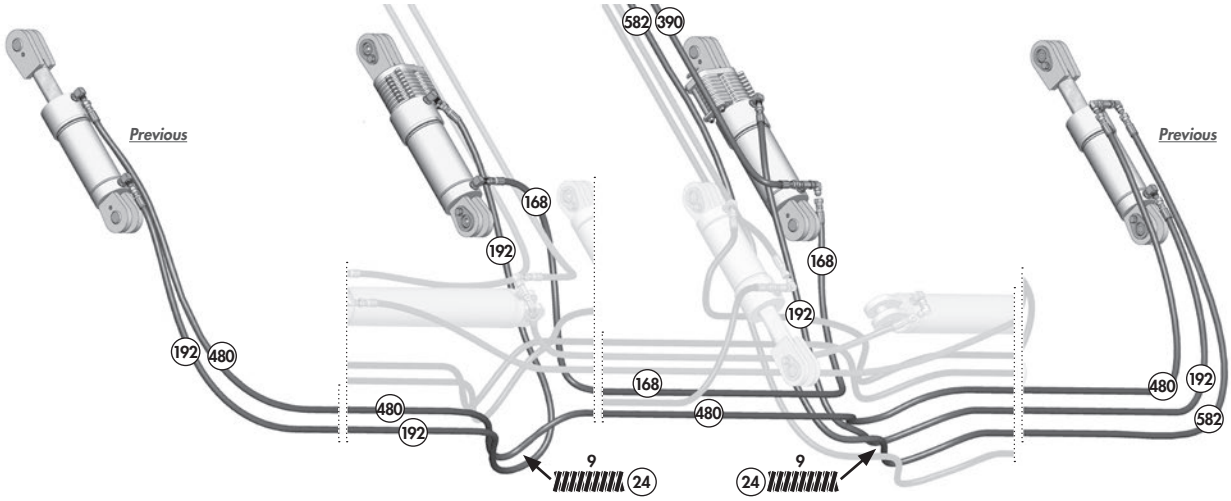

Hydraulic Fittings Required

1	141581 - Quick Coupler-m - 3/4 ORB	(2)	
2	141676 - Nipple, 3/4 ORB-m	(2)	
3	141682 - Coupler, Blue (+)	(1)	
4	141683 - Coupler, Blue (-)	(1)	
5	141515 - Connector, 3/4 JIC-m x ORB	(2)	
6	141504 - Elbow, 90° 3/4 JIC m x ORB m	(5)	(6)
7	141505 - Tee, 3/4 JIC m x m x 3/4 ORB m	(3)	(2)
8	141518 - 90° Elbow, 3/4 JIC-m x 3/4 JIC-f-sw	(4)	(3)
9	126702 - Wrap, Hose/Cable - 24"	(2)	
10	141503 - Tee, 3/4 JIC-f-sw x m x m	(1)	
11	141679 - Nipple, 3/4 ORB m x 3/4 ORB m-adj	(2)	
12	141560 - Elbow, 90° 3/4 JIC m x 9/16 ORB m	(2)	
13	126756 - Hose, 3/8 x 7-1/2	(2)	
14	141735 - Hydraulic Check Valve	(2)	

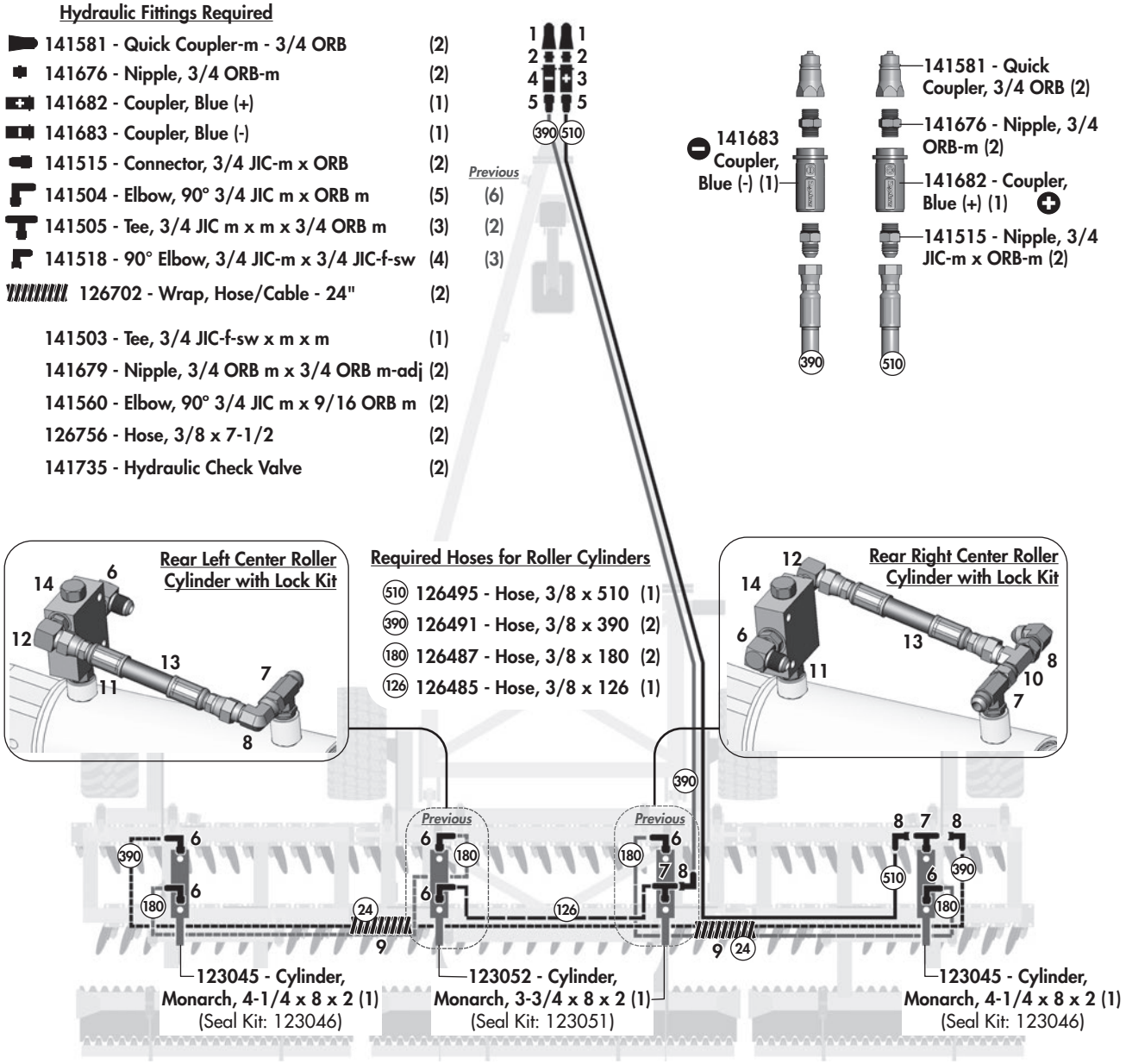

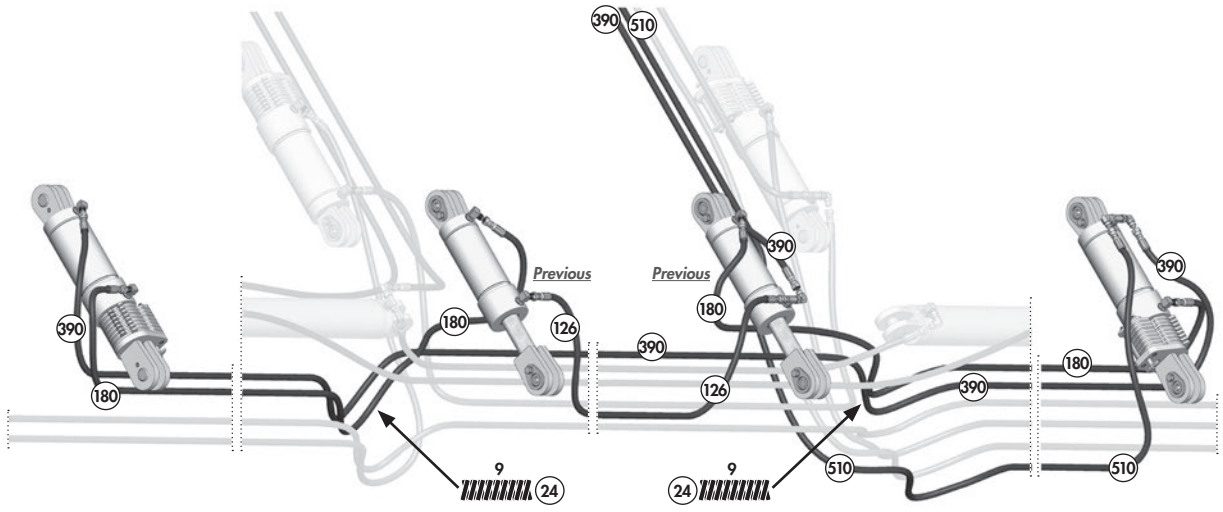

Hydraulic Fittings Required

1	141581 - Quick Coupler-m - 3/4 ORB	(2)	
2	141676 - Nipple, 3/4 ORB-m	(2)	
3	141682 - Coupler, Blue (+)	(1)	
4	141683 - Coupler, Blue (-)	(1)	
5	141515 - Connector, 3/4 JIC-m x ORB	(2)	
6	141504 - Elbow, 90° 3/4 JIC m x ORB m	(5)	*Previous* (6)
7	141505 - Tee, 3/4 JIC m x m x 3/4 ORB m	(3)	(2)
8	141518 - 90° Elbow, 3/4 JIC-m x 3/4 JIC-f-sw	(4)	(3)
9	126702 - Wrap, Hose/Cable - 24"	(2)	
10	141503 - Tee, 3/4 JIC-f-sw x m x m	(1)	
11	141679 - Nipple, 3/4 ORB m x 3/4 ORB m-adj	(2)	
12	141560 - Elbow, 90° 3/4 JIC m x 9/16 ORB m	(2)	
13	126756 - Hose, 3/8 x 7-1/2	(2)	
14	141735 - Hydraulic Check Valve	(2)	

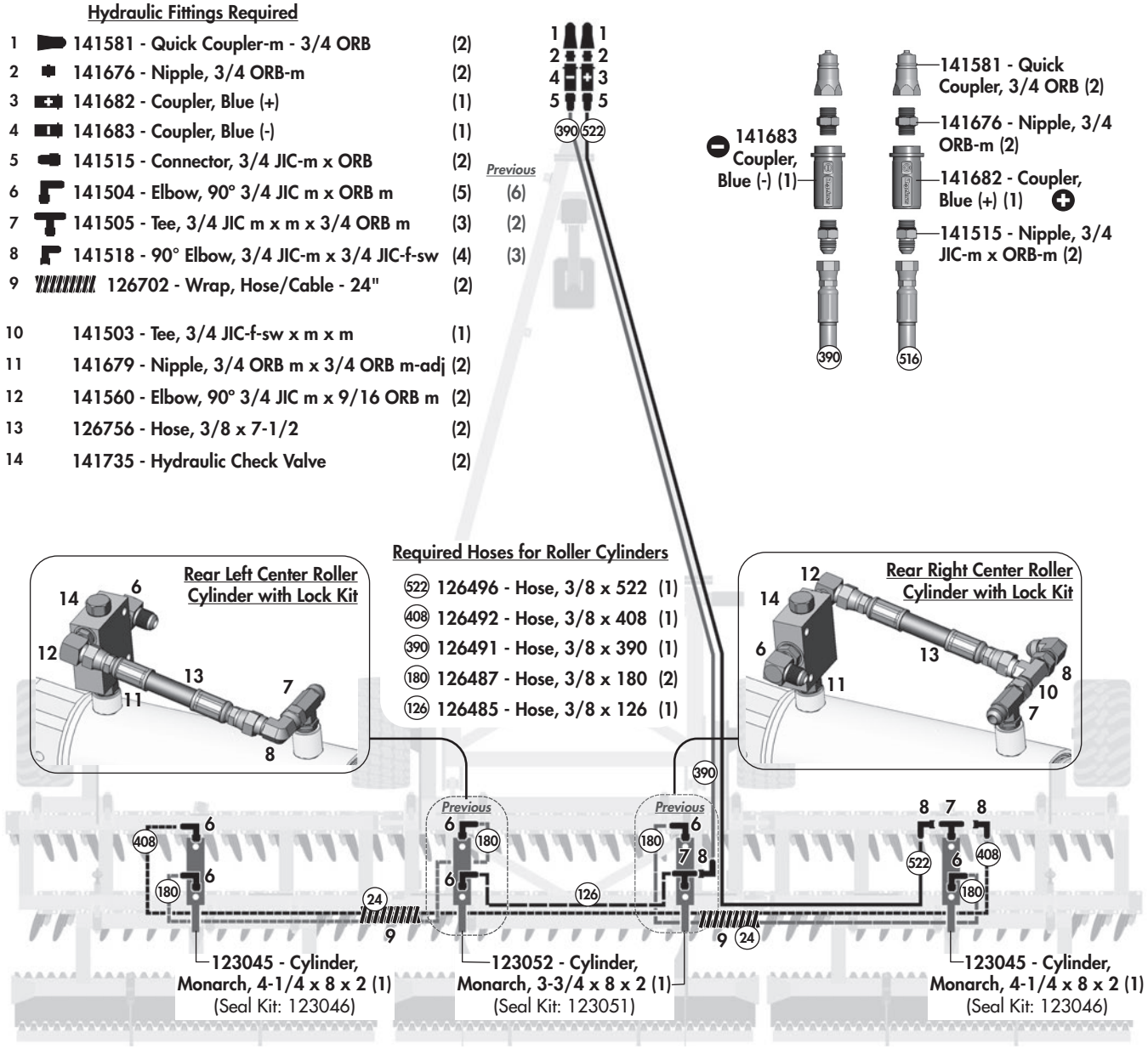

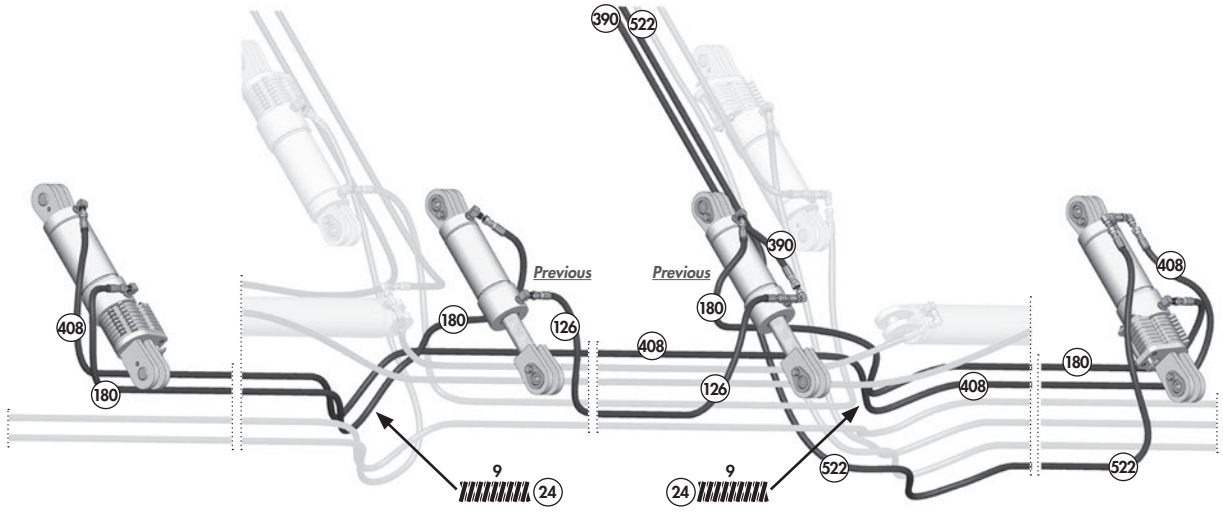

Hydraulic Layout - 3 - Transport

Hydraulic Fittings Required

1	141581 - Quick Coupler-m - 3/4 ORB	(2)
2	141676 - Nipple, 3/4 ORB-m	(2)
3	141686 - Coupler, Brown (+)	(1)
4	141687 - Coupler, Brown (-)	(1)
5	141515 - Connector, 3/4 JIC-m x ORB	(2)
6	141504 - Elbow, 90° 3/4 JIC m x ORB m	(2)
7	141505 - Tee, 3/4 JIC m x m x 3/4 ORB m	(2)
8	141518 - 90° Elbow, 3/4 JIC-m x 3/4 JIC-f-sw	(4)

Required Hoses for Transport Cylinders

- (312) 126490 - Hose, 3/8 x 312 (1)
- (264) 126489 - Hose, 3/8 x 264 (1)
- (192) 126488 - Hose, 3/8 x 192 (1)
- (110) 126483 - Hose, 3/8 x 110 (1)

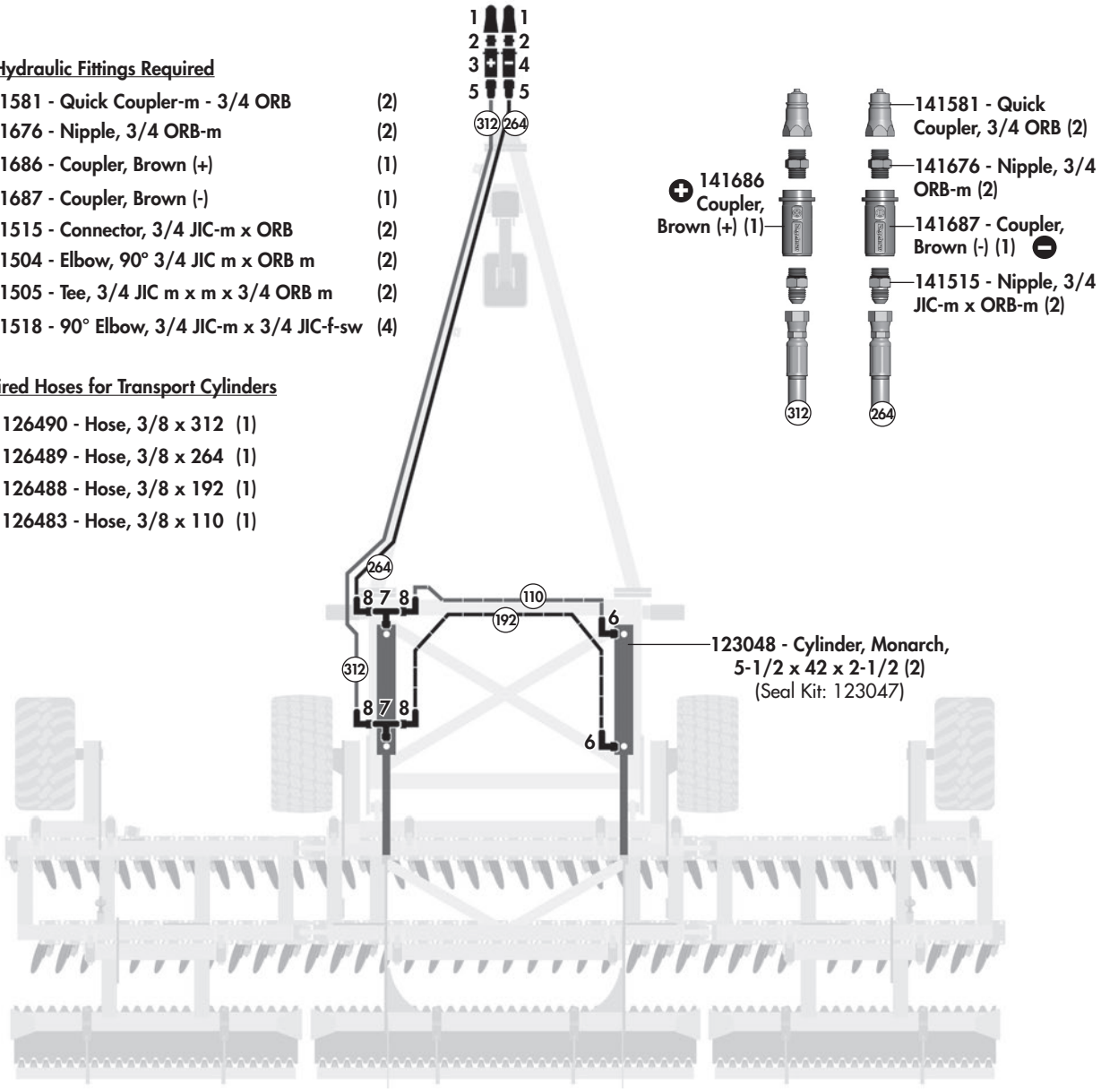

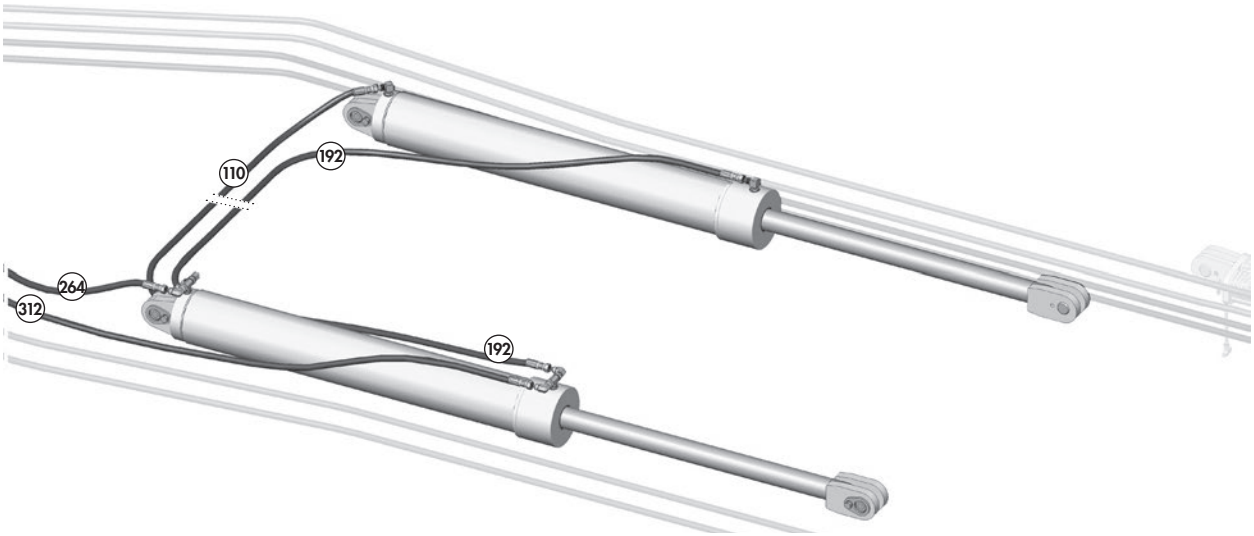

Hydraulic Layout - 4 - Wings

Standard Configuration Models

(Models with Wing Pressure Kit see next page)

Hydraulic Fittings Required

1	141581 - Quick Coupler-m - 3/4 ORB	(2)
2	141676 - Nipple, 3/4 ORB-m	(2)
3	141688 - Coupler, Black (+)	(1)
4	141689 - Coupler, Black (-)	(1)
5	141515 - Connector, 3/4 JIC-m x ORB	(6)
6	141504 - Elbow, 90° 3/4 JIC m x ORB m	(2)
7	141505 - Tee, 3/4 JIC m x m x 3/4 ORB m	(2)
8	141518 - 90° Elbow, 3/4 JIC-m x 3/4 JIC-f-sw	(5)
9	141609 - Adaptor, 3/4 JIC - 1/16 Orifice	(1)
10	141524 - Relief Valve, 2000 PSI - 3/4 ORB	(1)

Required Hoses for Wing Cylinders

- (436) 126493 - Hose, 3/8 x 436 (1)
- (408) 126492 - Hose, 3/8 x 408 (1)
- (100) 126482 - Hose, 3/8 x 100 (2)
- (70) 126481 - Hose, 3/8 x 70 (2)

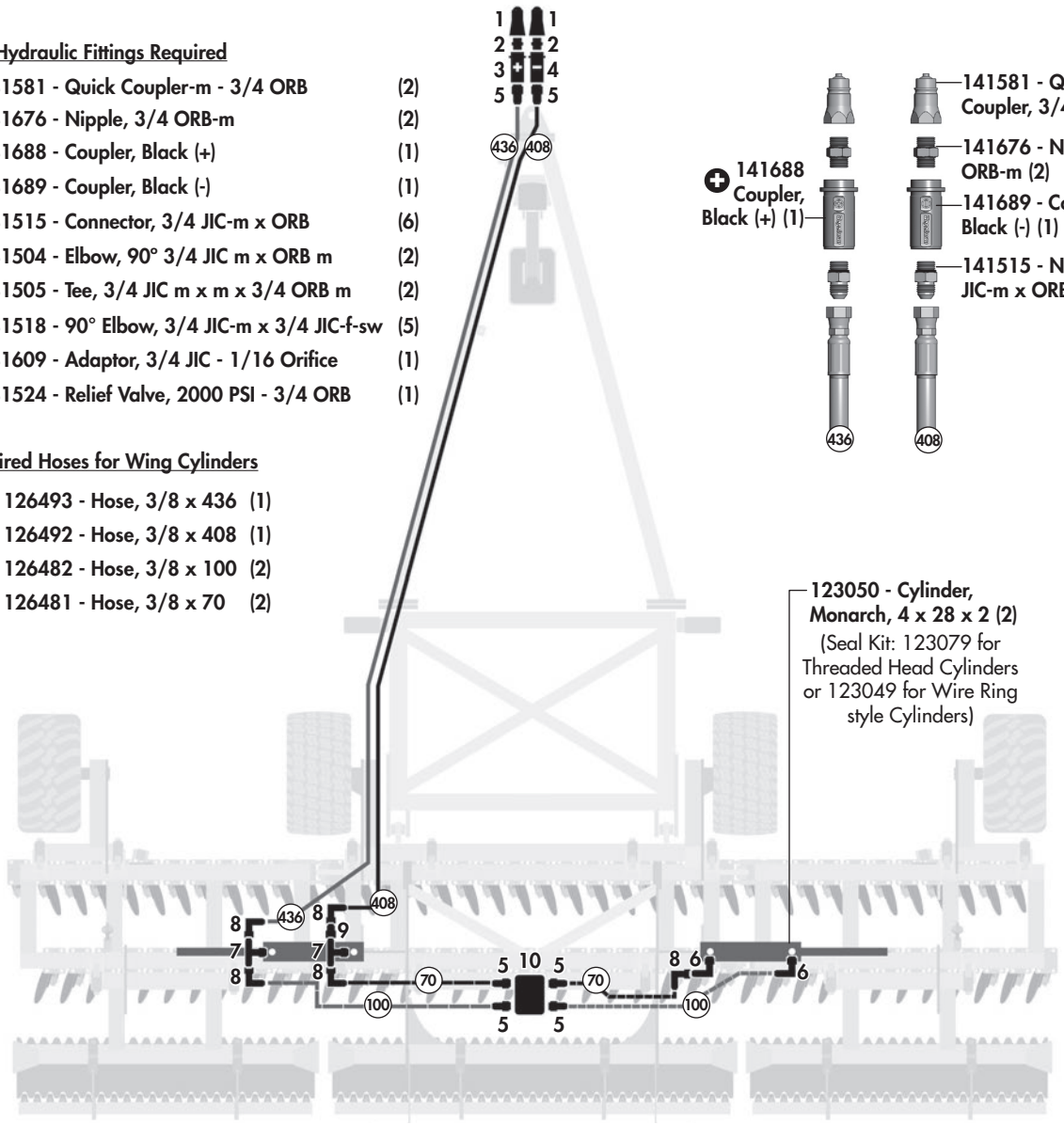

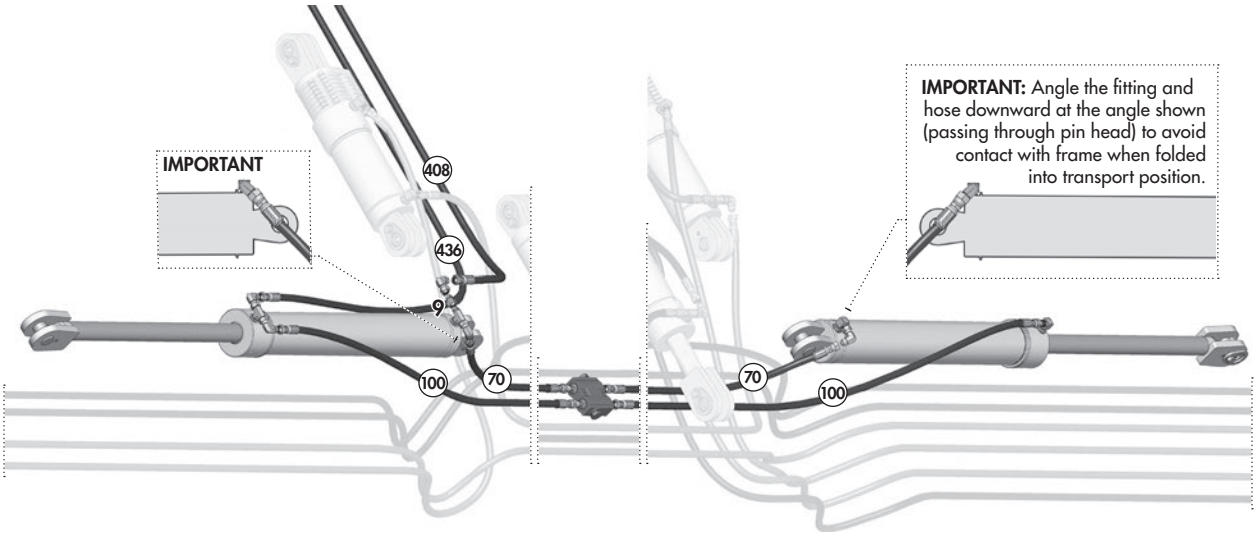

Hydraulic Layout - 4 - Wings

Models with Wing Pressure Kit

(Models without Wing Pressure Kit see previous page)

Hydraulic Fittings Required

1	141581 - Quick Coupler-m - 3/4 ORB	(2)
2	141676 - Nipple, 3/4 ORB-m	(2)
3	141688 - Coupler, Black (+)	(1)
4	141689 - Coupler, Black (-)	(1)
5	141515 - Connector, 3/4 JIC-m x ORB	(8)
6	141504 - Elbow, 90° 3/4 JIC m x ORB m	(2)
7	141505 - Tee, 3/4 JIC m x m x 3/4 ORB m	(2)
8	141518 - 90° Elbow, 3/4 JIC-m x 3/4 JIC-f-sw	(6)
9	141609 - Adaptor, 3/4 JIC - 1/16 Orifice	(1)
10	141524 - Relief Valve, 2000 PSI - 3/4 ORB	(1)
11	141741 - Pressure Gauge	(1)
12	141503 - Tee, 1/2 JIC F-SW x M x M	(1)
13	141560 - 90° Elbow, 3/4 JIC M x 9/16 ORB M	(1)
14	141740 - Valve, Reducing Relieving	(1)

Required Hoses for Wing Cylinders

436	126493 - Hose, 3/8 x 436	(1)
408	126492 - Hose, 3/8 x 408	(1)
100	126482 - Hose, 3/8 x 100	(2)
70	126481 - Hose, 3/8 x 70	(2)
52	126108 - Hose, 3/8 x 52	(1)
26	126109 - Hose, 3/8 x 26	(1)

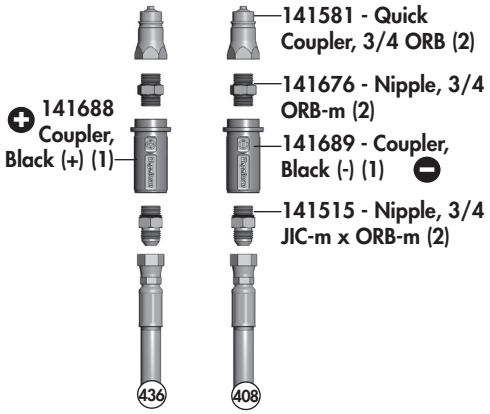

Wing Pressure Bracket Mounting Components

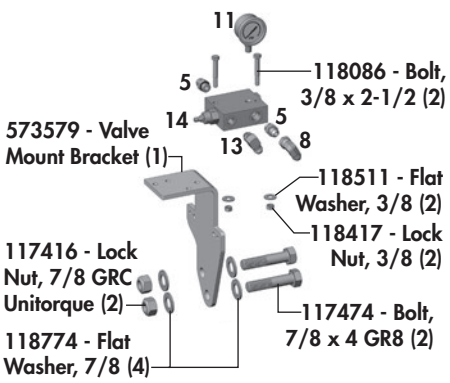

Note: The top of the Valve Mount bracket shown below is now formed opposite.

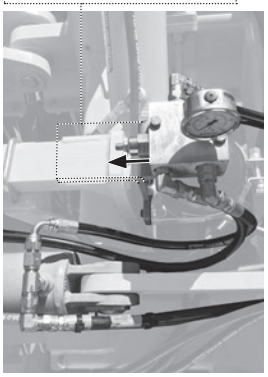

RH Wing Cylinder

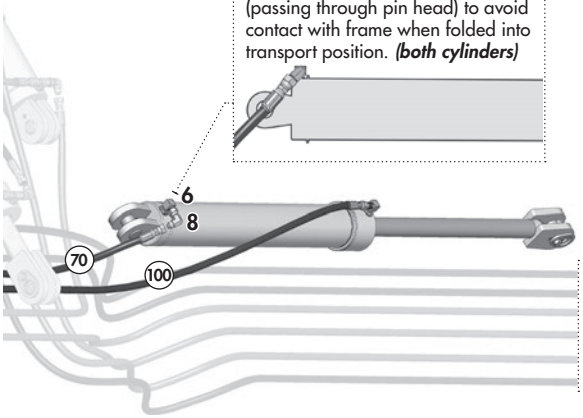

Hydraulic Layout - 5 - Jack

Hydraulic Fittings Required

1	141581 - Quick Coupler-m - 3/4 ORB	(2)
2	141676 - Nipple, 3/4 ORB-m	(2)
3	141680 - Coupler, Grey (+)	(1)
4	141681 - Coupler, Grey (-)	(1)
5	141515 - Connector, 3/4 JIC-m x ORB	(4)
6	141504 - Elbow, 90° 3/4 JIC m x ORB m	(1)
7	141597 - Ball Valve - 3/4 ORB	(1)
8	141609 - Adaptor, 3/4 JIC - 1/16 Orifice	(1)
9	141695 - Elbow, 90° 3/4 JIC f-sw x ORB m	(1)

Required Hoses for Jack Cylinders

(110) 126483 - Hose, 3/8 x 110 (1)

(120) 126484 - Hose, 3/8 x 120 (1)

Previous Hoses for Jack Cylinders

(94) *126541 - Hose, 3/8 x 94 (1)*

(110) *126507 - Hose, 3/8 x 110 (1)*

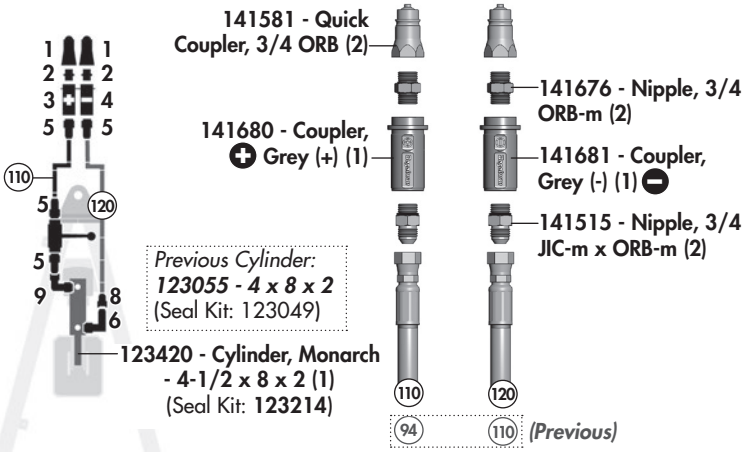

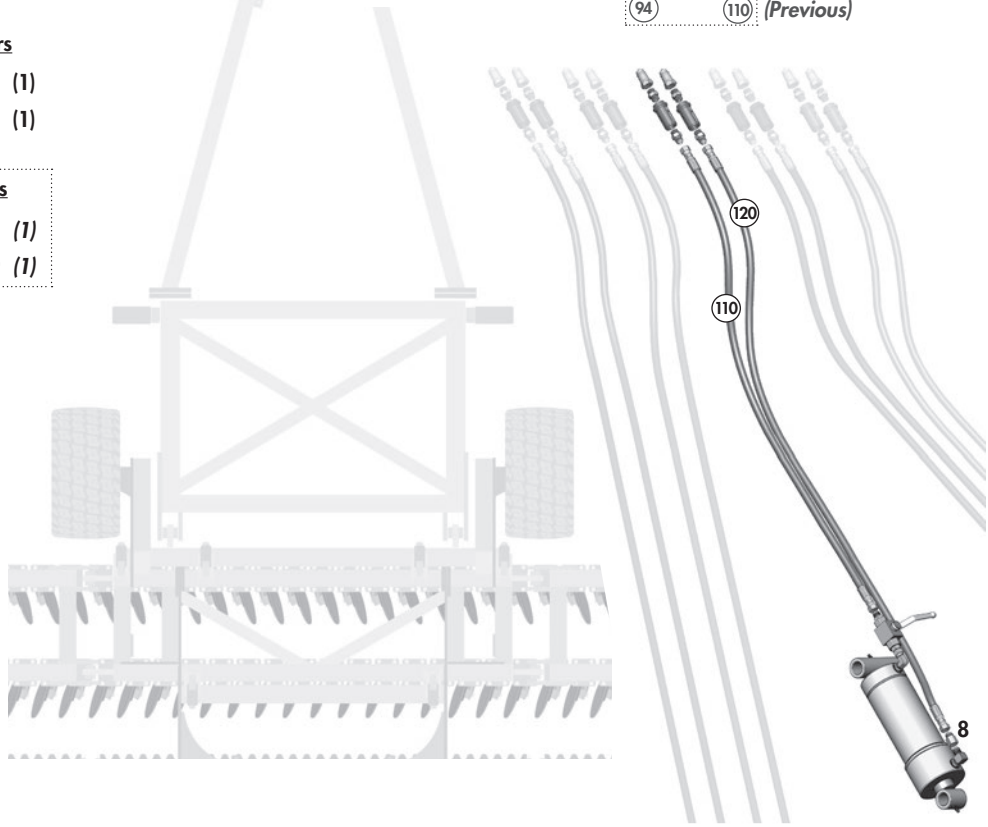

⚠ IMPORTANT:

Close the ball valve to prevent accidental operation of this circuit. Ensure ball valve handle remains in closed position.

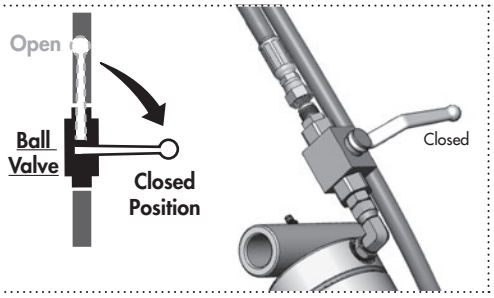

Dirt Deflector Components



Dirt deflector is located on outer edge of the right wing frame. Extension is required for ProTill 40 Controlled Traffic Models. *(Note: Previous Deflector Plate shown)*

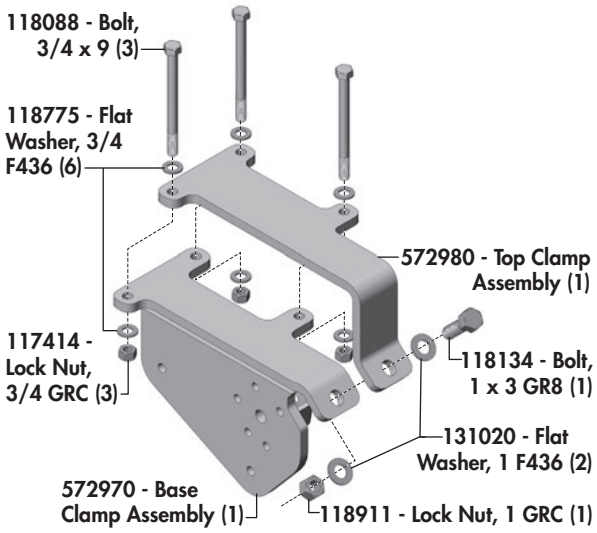

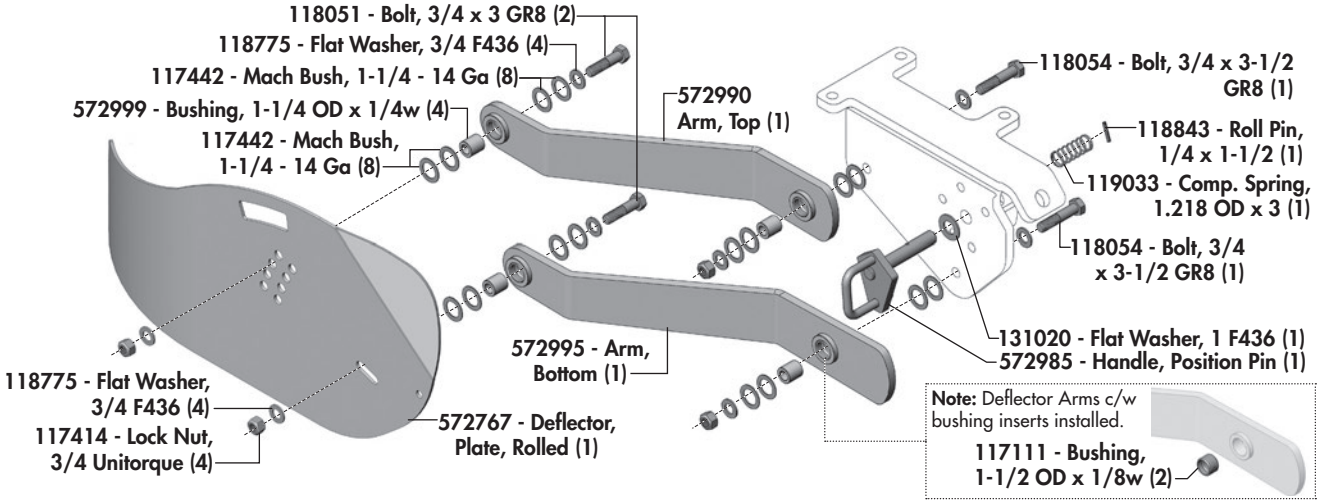

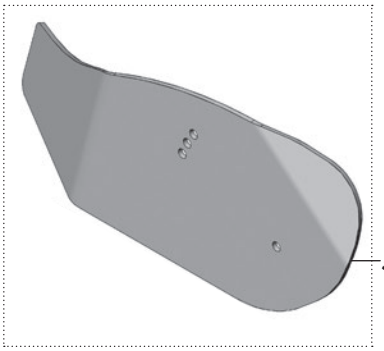

Previous Design

572965 - Deflector, Plate (1)

Dirt Deflector Adjustments

Dirt Deflector Adjustment Settings

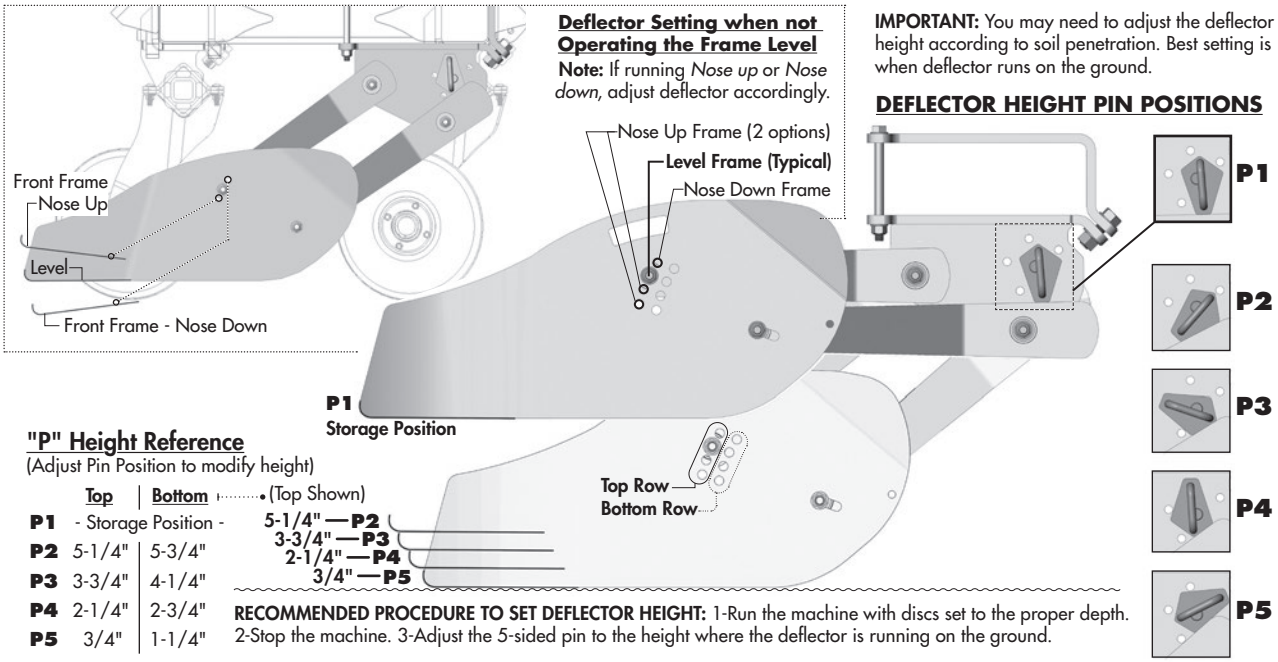

Deflector Setting when not Operating the Frame Level

Note: If running *Nose up* or *Nose down,* adjust deflector accordingly.

IMPORTANT: You may need to adjust the deflector height according to soil penetration. Best setting is when deflector runs on the ground.

DEFLECTOR HEIGHT PIN POSITIONS

"P" Height Reference

(Adjust Pin Position to modify height)

	Top	Bottom (Top Shown)
P1	- Storage Position -	
P2	5-1/4"	5-3/4"
P3	3-3/4"	4-1/4"
P4	2-1/4"	2-3/4"
P5	3/4"	1-1/4"

RECOMMENDED PROCEDURE TO SET DEFLECTOR HEIGHT: 1-Run the machine with discs set to the proper depth. 2-Stop the machine. 3-Adjust the 5-sided pin to the height where the deflector is running on the ground.

Dirt Deflector Extension

(Required only on Pro-Till 40 Controlled Traffic Models)

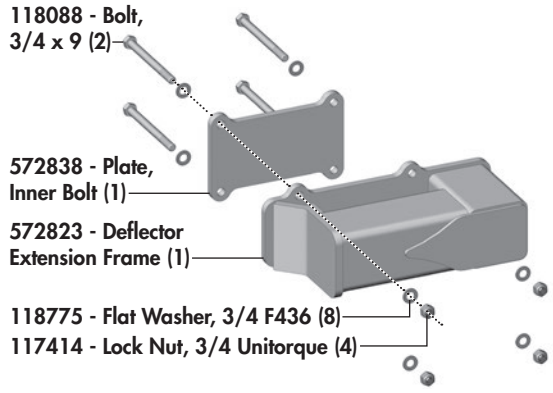

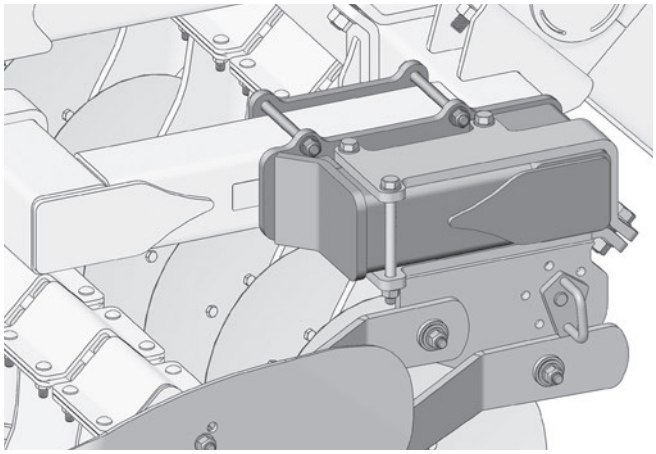

Light Routing & Components

Rear Light Configuration & Components

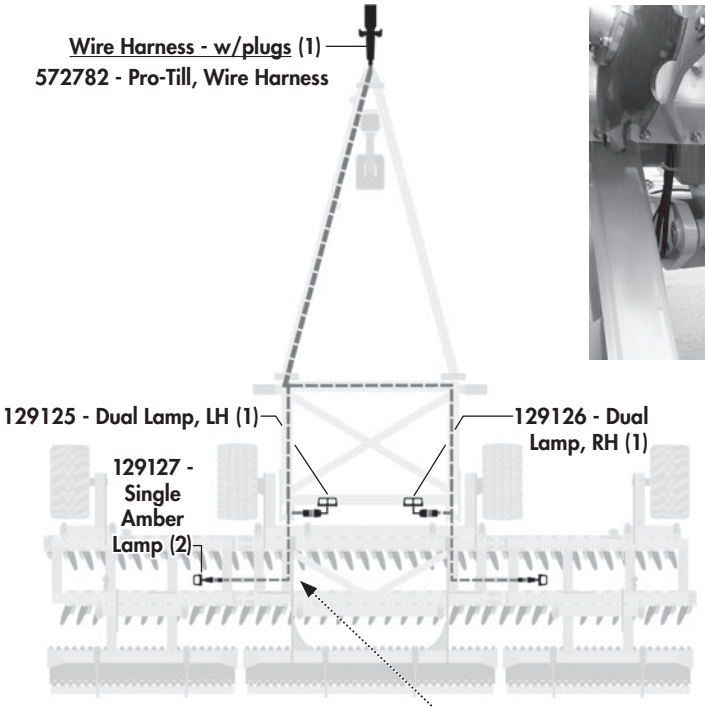

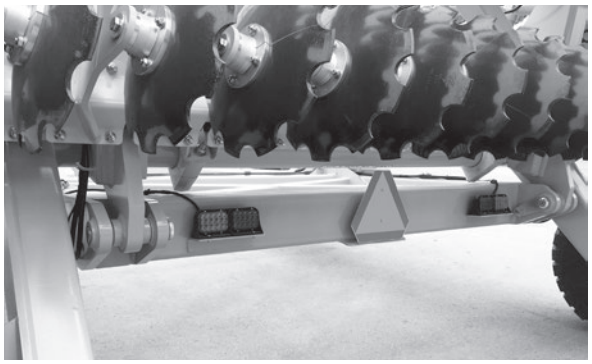

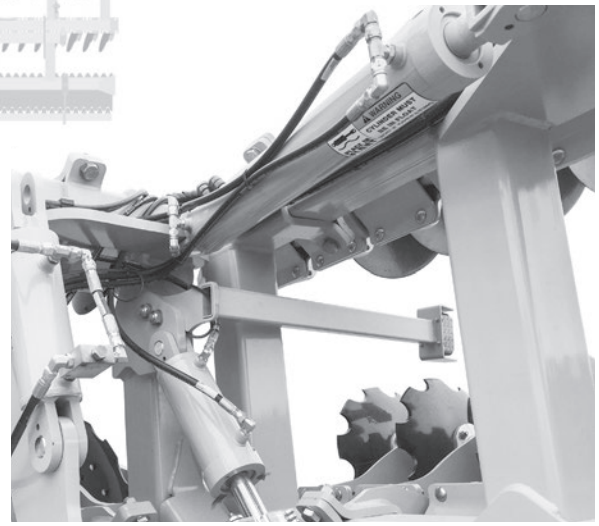

Previous: Rear Light Configuration

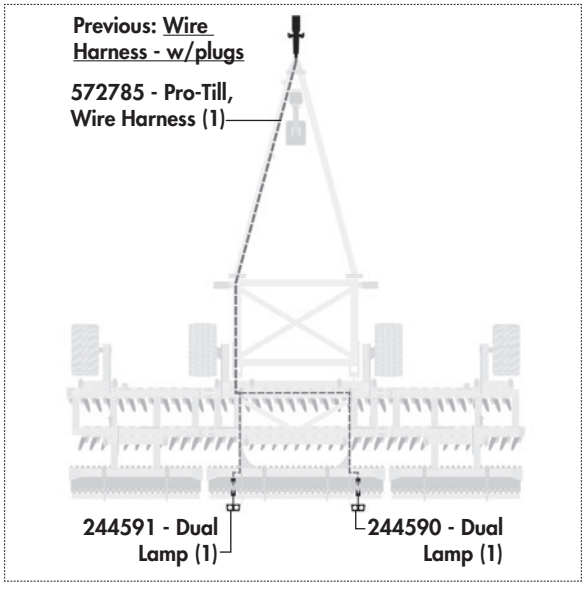

Light Routing & Components

Rear Light Configuration & Components

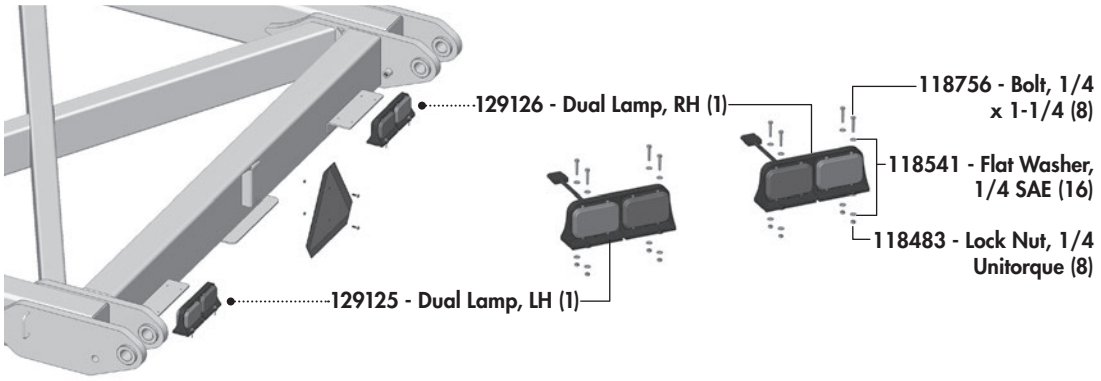

Single Amber Light Configuration & Components

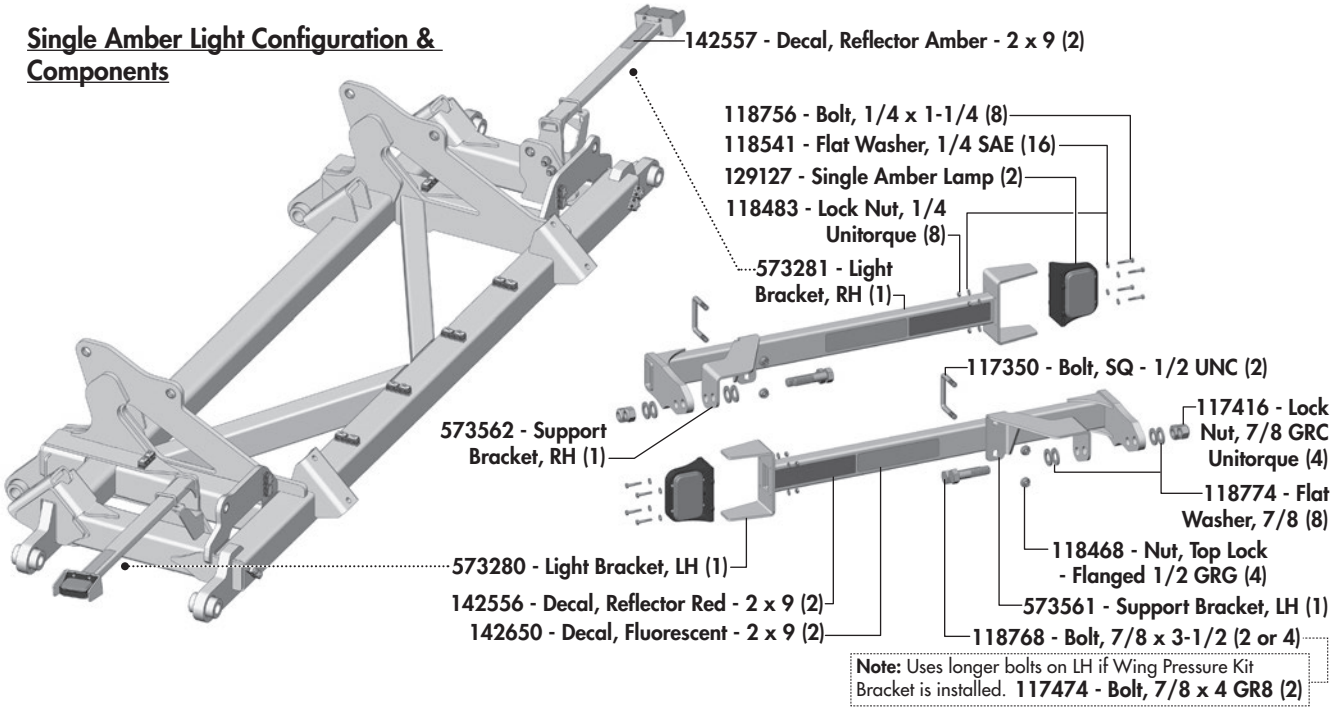

Note: Uses longer bolts on LH if Wing Pressure Kit Bracket is installed. **117474 - Bolt, 7/8 x 4 GR8 (2)**

Previous: ***Rear Light Components***

Previous: Light Bracket Location & Components

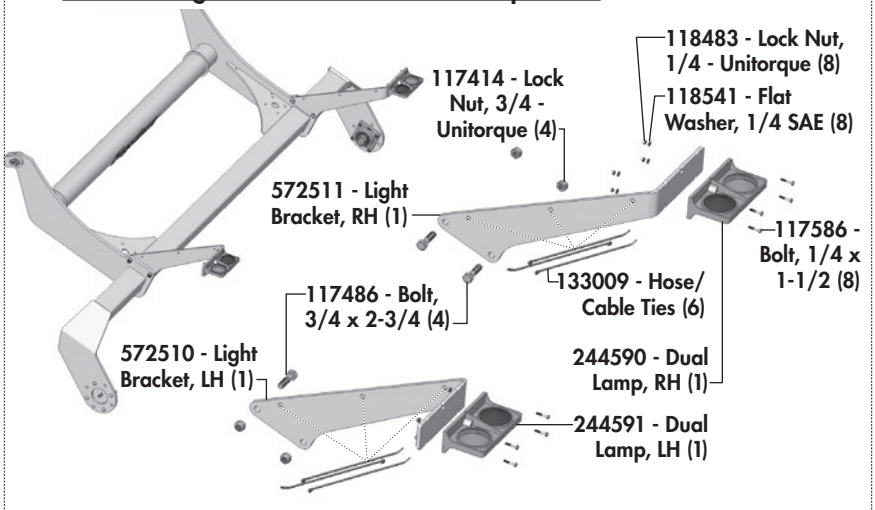

2 Year

Limited Warranty - Agricultural Products

Degelman Industries LP ("Degelman") warrants to the original purchaser of any new Degelman equipment, purchased from an authorized Degelman dealer, that the equipment will be free from defects in material and workmanship for a period of two (2) years from the date of delivery, for non-commercial use (including farm, institutional, government, and municipality) and (1) year from the date of delivery for commercial use. The obligation of Degelman to the purchaser under this warranty is limited to the repair or replacement of defective parts in the first year and to the provision, but not the installation of replacement parts in the second year. Degelman reserves the right to inspect any equipment or parts which are claimed to have been defective in material or workmanship.

This warranty limits its replacement or repair coverage to what is consistent with the warranty of Degelman's suppliers of purchased components.

Replacement or repair parts installed in the equipment covered by this limited warranty are warranted for ninety (90) days from the date of delivery of such part or the expiration of the applicable new equipment warranty period, which ever occurs later. Warranted parts shall be provided at no cost to the user at an authorized Degelman dealer during regular working hours. Warranted replacement parts will either be replaced or rebuilt at Degelman's discretion.

Disclaimer of implied warranties & consequential damages

This warranty shall not be interpreted to render Degelman Industries LP liable for injury, death, property damage or damages of any kind, whether direct, consequential, or contingent to property. Without limiting the generality of the foregoing, Degelman shall not be liable for damages resulting from any cause beyond its reasonable control, including, without limitation, loss of crops, any expense or loss of labour, supplies, rental machinery or loss of use.

No other warranty of any kind whatsoever, express or implied is made with respect to this sale; and all implied warranties of merchantability and fitness for a particular purpose which exceed the obligations set forth in this written warranty are hereby disclaimed and excluded from this sale. This exclusion shall not apply in any jurisdiction where it is not permitted by law.

This limited warranty shall not apply:

1. If, in the sole opinion of Degelman, the unit has been subjected to misapplication, abuse, misuse, negligence accident or incorrect off-site machine set-up.
2. To any goods that have sustained damage or deterioration attributable to a lack of routine maintenance (eg. Check and Re-torque of fastening hardware, Hydraulic fluid purities, drive train alignments, and clutch operation)
3. If parts not made or supplied by Degelman have been used in the connection with the unit, if, in the sole judgement of Degelman such use affects its performance, safety, stability or reliability.
4. If the unit has been altered or repaired outside of an authorized Degelman dealership in a manner which, in the sole judgement of Degelman, affects its performance, safety, stability or reliability.
5. To expendable or wear items such as (eg. Harrow tines, Rock Picker and Rock Rake wear teeth and replaceable bushings and pins.) and any other items that in the company's sole judgement are a wear item.

No employee or representative of Degelman Industries LP is authorized to change this limited warranty in any way or grant any other warranty unless such change is made in writing and signed by the Degelman Service Manager.

This limited warranty is subject to any future availability of supply, which may directly affect Degelman's ability to obtain materials or manufacture replacement parts.

Degelman reserves the right to make improvements in design or changes in specifications at any time, without incurring obligations to owners of equipment previously delivered.

This limited warranty is subject to compliance by the customer to the enclosed *Retail Customer's Responsibility Under Degelman Warranty.*

Warranty

Retail Customer's Responsibility Under Degelman Warranty.

It is the retail customer and/or Operator's responsibility to read the Operator's Manual, to operate, lubricate, maintain and store the equipment in accordance with all instructions and safety procedures. Failure of the operator to read the operators manual is a misuse of this equipment.

It is the retail customer and/or operators responsibility to inspect the product and to have any part(s) repaired or replaced when continued operation would cause damage or excessive wear to other parts or cause safety hazard.

It is the retail customer's responsibility to deliver the product to the authorized Degelman dealer, from whom he purchased it, for service or replacement of defective parts, which are covered by warranty. Repairs to be submitted for warranty consideration must be made within forty-five days of failure.

It is the Retail Customer's responsibility for any cost incurred by the dealer for hauling of the product for the purpose of performing a warranty obligation or inspection.

WARRANTY INFORMATION

Make certain the warranty registration card has been forwarded to:

Degelman Industries LP
Box 830 -272 Industrial Dr.
Regina, SK, Canada
S4P 3B1

Always give your dealer the serial number of your Degelman product when ordering parts or requesting service or other information.

The serial number is located on the machine as shown in the diagram below. In the space provided record the model number, the serial number and the date of purchase to assist your dealer in providing you with prompt and efficient service.

SERIAL NUMBER: _____

MODEL NUMBER: _____

DATE OF PURCHASE: _____





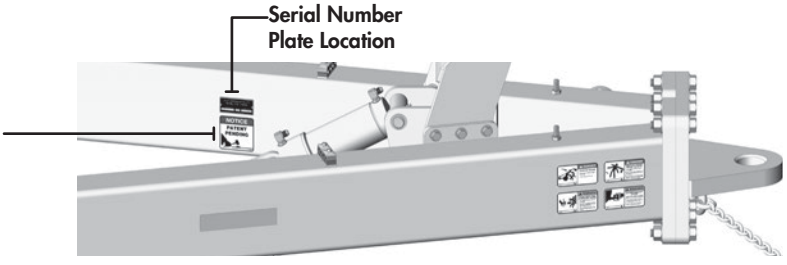

© 2024 Degelman Industries LP