Degelman

OPERATOR & PARTS MANUAL

rock digger
RD320



143345 v1.4

DEGELMAN INDUSTRIES LP
BOX 830-272 INDUSTRIAL DRIVE,
REGINA, SK, CANADA, S4P 3B1
FAX 306.543.2140 PH 306.543.4447
1.800.667.3545 DEGELMAN.COM

ROCK DIGGER RD320

Serial Numbers above 1291

Degelman

rock digger
RD320

TABLE OF CONTENTS - OPERATORS SECTION

Introduction	*1*
Safety	*2*
Overview	*5*
Preparation	*6 - 8*
Operation	*9*
Transporting	*10*
Storage / Safety Decals	*11*
Troubleshooting	*12*
Service & Maintenance	*13 - 21*

TABLE OF CONTENTS - PARTS SECTION *23*

Overview	*23*
Pole / Frame Components	*24*
Rear Assembly Components	*25*
Hydraulic Routing	*26*
Hydraulic Cylinders	*27*
Wheel Components	*28*
Warranty	*29 - 30*

DEGELMAN INDUSTRIES LP
BOX 830-272 INDUSTRIAL DRIVE,
REGINA, SK, CANADA, S4P 3B1
FAX 306.543.2140 PH 306.543.4447
1.800.667.3545 DEGELMAN.COM

IMPORTANT:



READ MANUAL

rock digger
RD320



CONGRATULATIONS Congratulations on your choice of a Degelman Rock Digger to complement your farming operation. It has been designed and manufactured to meet the needs of a discerning Agricultural market for the efficient removal of large buried rocks. Use this manual as your first source of information about this machine. If you follow the instructions given in this manual, your machine will work well for many years.

Safe, efficient and trouble free operation of your Degelman Rock Digger requires that you and anyone else who will be operating or maintaining the Digger, read and understand the Safety, Operation, Maintenance and Troubleshooting information contained within this Manual.

Keep this manual handy for frequent reference and to pass on to new operators or owners. Call your Degelman Dealer if you need assistance, information or additional copies of the manual.

OPERATOR ORIENTATION - The directions left, right, front and rear, as mentioned throughout the manual, are as seen from the tractor drivers' seat and facing in the direction of travel.

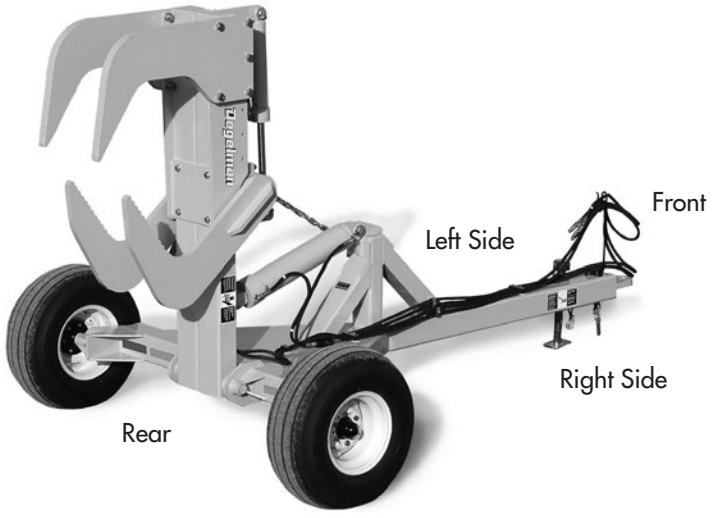

Why is SAFETY important to YOU?

3 BIG Reasons:

- **Accidents Can Disable and Kill**
- **Accidents Are Costly**
- **Accidents Can Be Avoided**



SAFETY ALERT SYMBOL

The **Safety Alert Symbol** identifies important safety messages applied to the Rock Digger and in this manual. When you see this symbol, be alert to the possibility of **injury or death**. Follow the instructions provided on the safety messages.

The **Safety Alert Symbol** means:

ATTENTION!
BECOME ALERT!
YOUR SAFETY IS INVOLVED!

SIGNAL WORDS

Note the use of the Signal Words: **DANGER**, **WARNING**, and **CAUTION** with the safety messages. The appropriate Signal Word has been selected using the following guidelines:

DANGER

DANGER: Indicates an imminently hazardous situation that, if not avoided, **WILL** result in death or serious injury if proper precautions are not taken.

WARNING

WARNING: Indicates a potentially hazardous situation that, if not avoided, **COULD** result in death or serious injury if proper precautions are not taken.

CAUTION

CAUTION: Indicates a potentially hazardous situation that, if not avoided, **MAY** result in minor or moderate injury if proper practices are not taken, or, serves as a reminder to follow appropriate safety practices.

SAFETY

YOU are responsible for the safe operation and maintenance of your Degelman Rock Digger. **YOU** must ensure that you and anyone else who is going to operate, maintain or work around the Rock Digger be familiar with the operating and maintenance procedures and related **SAFETY** information contained in this manual. This manual will take you step-by-step through your working day and alerts you to all good safety practices that should be adhered to while operating this equipment.

Remember, **YOU** are the key to safety. Good safety practices not only protect you but also the people around you. Make these practices a working part of your safety program. Be certain that **EVERYONE** operating this equipment is familiar with the recommended operating and maintenance procedures and follows all the safety precautions. Most accidents can be prevented. Do not risk injury or death by ignoring good safety practices.

- Rock Digger owners must give operating instructions to operators or employees before allowing them to operate the unit, and at least annually thereafter.
- The most important safety device on this equipment is a SAFE operator. It is the operator's responsibility to read and understand ALL Safety and Operating instructions in the manual and to follow these. All accidents can be avoided.
- A person who has not read and understood all operating and safety instructions is not qualified to operate the machine. An untrained operator exposes himself and bystanders to possible serious injury or death.
- Do not modify the equipment in any way. Unauthorized modification may impair the function and/or safety and could affect the life of the equipment.
- Think SAFETY! Work SAFELY!

GENERAL SAFETY

1. Read and understand the Operator's Manual and all safety signs before operating, maintaining or adjusting the Digger.



2. Install and properly secure all shields and guards before operating. Use hitch pin with a mechanical locking device.
3. Have a first-aid kit available for use should the need arise and know how to use it.



4. Have a fire extinguisher available for use should the need arise and know how to use it.



5. Wear appropriate protective gear. This list includes but is not limited to:
   - A hard hat
   - Protective shoes with slip resistant soles
   - Protective glasses or goggles
   - Heavy gloves
   - Wet weather gear
   - Hearing protection
   - Respirator or filter mask

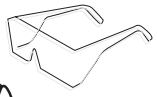



6. Clear the area of people, especially small children, and remove foreign objects from the machine before starting and operating.
7. Do not allow riders.
8. Lower rear arm and hook arm to ground, stop tractor engine, place all controls in neutral, set park brake, remove ignition key before servicing, adjusting, repairing or unplugging.
9. Review safety related items with all operators annually.

Overview

TO THE NEW OPERATOR OR OWNER

The Degelman Rock Digger is designed to efficiently dig out large buried rocks and debris from fields. Many of the features incorporated into this machine are the results of suggestions made by customers like you.

It is the owner's or operator's responsibility to read this manual carefully to learn how to operate the machine safely and how to set it to provide maximum efficiency. Safety is everyone's business. By following safe operating practices, a safe environment is provided for the operator and bystanders.

The manual will take you step-by-step through your working day. By following the operating instructions in conjunction with a good maintenance program, your machine will provide many years of trouble-free service.

PRINCIPLES OF OPERATION

The Rock Digger consists of a hitch pole/frame unit, a rear arm/tooth assembly, a hooking arm frame and two tires.

The rear frame/tooth assembly is designed to do the bulk of the rock removal while the hooking arm is designed to cradle the rock for transporting the obstacle.

Rock Digger Components

1. Pole/Frame Assembly
2. Rear Arm
3. Hook Arm
4. Jack
5. Rear Arm Cylinder
6. Hook Arm Cylinder
7. Tooth
8. Lock-up Chain
9. SMV Sign

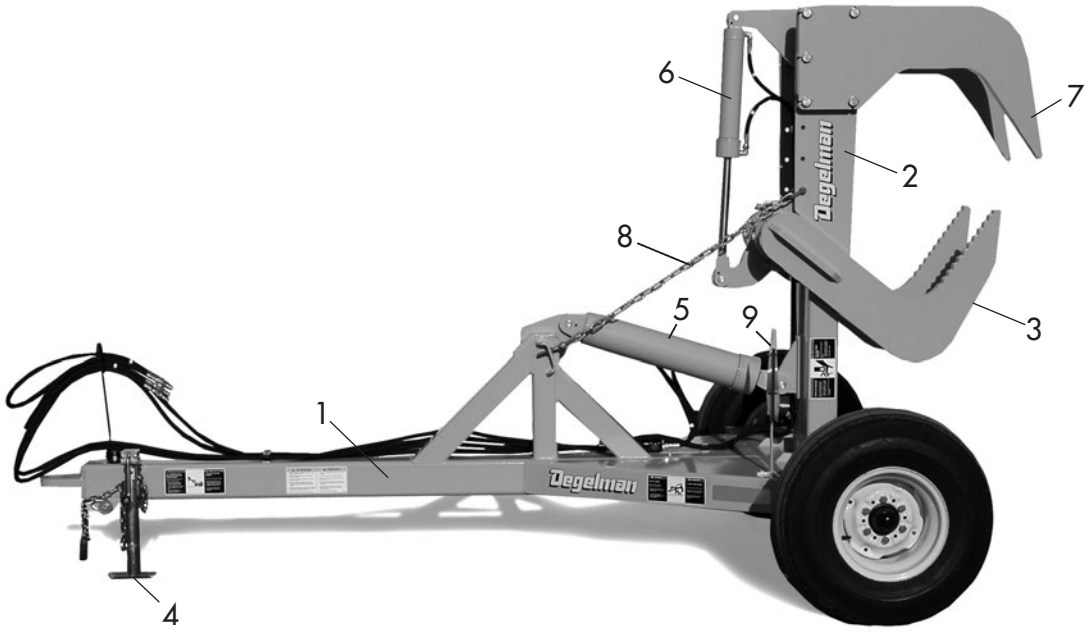

⚠ OPERATING SAFETY

1. Read and understand the Operator's Manual and all safety signs before using.

2. Lower rear arm and hook arm to ground, stop engine, place all controls in neutral, set park brake and remove ignition key before servicing, adjusting or repairing.

3. Keep hands, feet, hair and clothing away from all moving and/or rotating parts.

4. Do not allow riders on the Rock Digger or tractor during operation or transporting.

5. Clear the area of all bystanders, especially children, before starting.

6. Be careful when working around or maintaining a high-pressure hydraulic system. Ensure all components are tight and in good repair before starting.

7. Clean all reflectors, lights and the SMV sign before transporting on a highway or public road. Be sure to check with local highway authorities and comply with their lighting requirements.

8. Stay well back from machine when operating. Keep others away.

⚠ **WARNING:** **DO NOT** disconnect the lock-up chain until the Rock Digger has been hitched up to a tractor, hydraulic hoses connected and the hydraulic system pressurized.

Failure to heed this warning can result in unexpected dropping of teeth along with rapid upending of the machine due to an air pocket or lack of oil in the cylinders.

BREAK-IN

Although there are no operational restrictions on the Rock Digger when it is new, there are some mechanical checks that must be done to ensure the long term integrity of the unit. When using the machine for the first time, follow this procedure:

⚠ *It is extremely important to follow all of the Break-In procedures especially those listed in the "Before using" section below to avoid damage:*

Before using:

1. Read Safety Info. & Operator's Manual.
2. Complete steps in "Pre-Operation Checklist".
3. Lubricate both wheel bearings.
4. Check all bolt tightness.

After operating for 2 hours:

1. Retorque wheel bolts.
2. Check all hardwaretightness. Tighten as required.
3. Check all hydraulic system connections. Tighten if any are leaking.

After operating for 8 hours:

1. Repeat Step B.
2. Go to the service schedule as outlined in the "Service & Maintenance" section.

Preparation

PRE-OPERATION CHECKLIST

Efficient and safe operation of the Rock Digger requires that each operator reads and understands the operating procedures and all related safety procedures outlined in this manual. A pre-operational check list is provided for the operator. It is important for both personal safety and maintaining the good mechanical condition of the machine that this checklist be followed:

Before operating the machine and each time thereafter, the following areas should be checked off:

- ☐ 1. Lubricate the machine per the schedule outlined in the "Service & Maintenance Section".
- ☐ 2. Use only a tractor of adequate power (100 hp minimum) and weight to handle the Digger.
- ☐ 3. Ensure that the machine is properly attached to the tractor using a drawbar pin with provisions for a mechanical retainer. Make sure that a retainer such as a Klik pin is installed.

  Note: It is important to pin the drawbar in the central location only.
- ☐ 4. Ensure that a safety chain on the hitch is installed.
- ☐ 5. Check tires & ensure that they are inflated to specified pressure:

  Current: 12.5L-15-12 Ply - 90 PSI (620 kPa)

  [Previous: 12.5L-15-8 Ply - 36 PSI (250 kPa) *]*
- ☐ 6. Check oil level in the tractor hydraulic reservoir. Top up as required.
- ☐ 7. Inspect all hydraulic lines, hoses, fittings and couplers for tightness. Tighten if there are leaks. Use a clean cloth to wipe any accumulated dirt from the couplers before connecting to the tractor's hydraulic system.

TRACTOR PREPARATION

Follow this procedure when selecting and preparing a tractor for use with the machine:

1. Use only a tractor of sufficient power and weight to adequately handle the machine. It is recommended that the tractor have at least **100 PTO** horsepower for normal operating conditions.
2. Locate the drawbar in its centre position to prevent it from swinging.
3. Use only a drawbar pin with provisions for a mechanical retainer such as a Klik pin. Always install the retainer.
4. Always attach a safety chain between the tractor and the machine to prevent unexpected separation.
5. Check that adequate hydraulic fluid is in tractor reservoir and top up if necessary.
6. Check for any oil leaks.

⚠ **WARNING:** Use extreme care when working around a high pressure hydraulic system. Make sure all connections are tight and all components are in good repair. Wear hand and eye protection when searching for suspected leaks.



IMPLEMENT PRE-OPERATIONAL WARNING

⚠ **WARNING:** **DO NOT** disconnect the lock-up chain until the Rock Digger has been hitched up to a tractor, hydraulic hoses connected and the hydraulic system pressurized.

Failure to heed this warning can result in unexpected dropping of teeth along with rapid upending of the machine due to an air pocket or lack of oil in the cylinders.

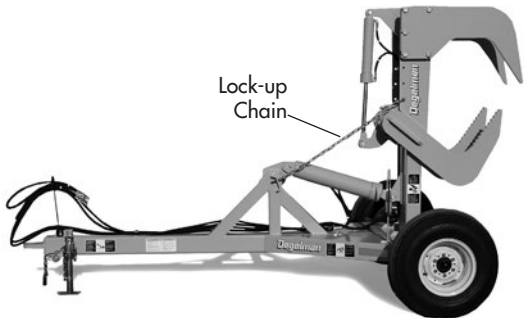

ATTACHING / UNHOOKING

The Rock Picker should always be parked on a level, dry area that is free of debris and foreign objects. Follow this procedure when attaching:

1. Clear the area of bystanders and remove foreign objects from the machine and working area.
2. Make sure there is enough room to back the tractor up to the hitch pole.
3. Start the tractor and slowly back it up to the hitch point.
4. Stop the tractor engine, place all controls in neutral, set park brake and remove ignition key before dismounting.
5. Use the hitch pole jack to raise or lower the pole to align with the drawbar.
6. Install a drawbar pin with provisions for a mechanical retainer such as a Klik pin. Install the retainer.
7. Install a safety chain between the tractor drawbar and the hitch pole.
8. Connect the hydraulics. To connect, proceed as follows:

- Use a clean cloth or paper towel to clean the couplers on the ends of the hoses. Also clean the area around the couplers on the tractor.
- Remove the plastic plugs from the couplers and insert the male ends.

9. Raise the hitch jack and rotate it 90° to place in its stowed position.
10. When unhooking from the tractor, reverse the above procedure.

Occasionally air may become trapped in the hydraulic circuit, making it necessary to "bleed" the circuit.

To perform this operation cycle the hydraulics several times or especially on older tractors, temporarily loosen an easily accessible hose fitting enough to allow any trapped air to escape while cycling the hydraulics. Retighten fitting.

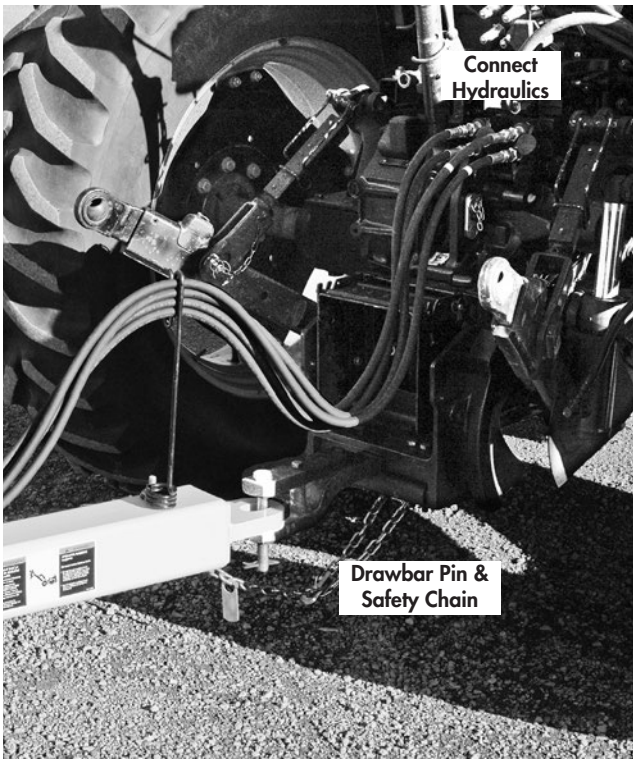

⚠ **WARNING:** **NEVER** unhook the Rock Digger from tractor when rock is being held in raised position. Machine will upend.

OPERATING

1. **Operator's Responsibility:**

   Every operator should read this manual and be instructed in safe operating procedures. An untrained operator is not qualified to operate this machine and could place themselves or bystanders in danger.

2. **Bleeding the Hydraulics:**

   Before beginning operation, bleed the hydraulic system to remove any air.

   To do this, cycle the hydraulics several times by holding the cylinder fully extended for several seconds. This will cause any trapped air to be purged from cylinder.

3. **Methods of Operation:**

   Two basic methods of operating the Digger can be utilized:

   1) The first method is to lower the rear teeth to ground level about 20-25 ft. (6-8m) from the rock to be removed. Place the rear teeth hydraulics into "float position". By slowly driving the tractor ahead the teeth will automatically penetrate the ground as the rock is approached.

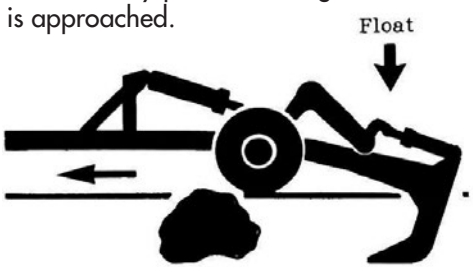

   When contact is made, continue forward speed which will roll the rock up and out of the ground.

   To remove the rock, activate the hook arm hydraulics to cradle the rock securely, then raise the rear arm fully. Finally tow rock to desired dumping site.



   2) The second method disturbs less soil but requires working both hydraulic circuits simultaneously in an attempt to grab the rock between the rear teeth and the hook arm.

   Drive the digger teeth over the rock and lower the teeth at the edge of the obstacle. Rock the tractor ahead slightly to set the teeth under the rock. Next, lower the hook arm to also grasp the rock and work both hydraulic circuits until the obstruction can be pulled out of the ground. Finally raise up the rear frame and tow rock to the desired dumping site.

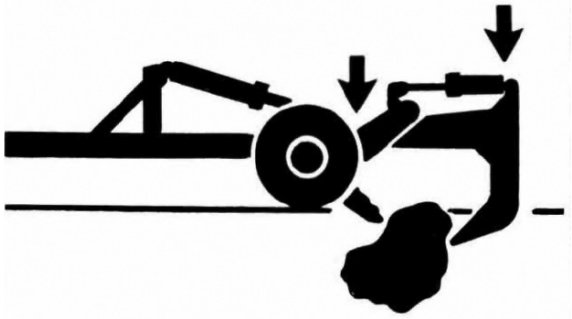



4. **Unloading:**

   ⚠ **WARNING:** Stay clear of the machine and surrounding area when unloading. Keep others away.

   Back up to the dumping site. Lower the rear arm to approximately 30-45° and release the hook arm hydraulics to allow the rock to roll out.

⚠ TRANSPORT SAFETY

- Always travel at a safe speed. Use caution when making corners or meeting traffic.
- Make sure the SMV (Slow Moving Vehicle) emblem and all the lights and reflectors that are required by the local highway and transport authorities are in place, are clean and can be seen clearly by all overtaking and oncoming traffic.



- Keep to the right and yield the right-of-way to allow faster traffic to pass. Drive on the road shoulder, if permitted by law.
- Always use hazard warning flashers on tractor when transporting unless prohibited by law.
- Always use a pin with provisions for a mechanical retainer and a safety chain when attaching to a tractor or towing vehicle.
- Ensure the red transport pin on the grille is in transport position and the swing hitch pole is fully inward and secured before moving on a public road.

TRANSPORTING

Follow this procedure when preparing to transport:

1. Clear the area of bystanders, especially small children, before converting into transport configuration.
2. Retract both hydraulic cylinders fully.
3. Position the lock-up chain into the position shown and secure with the pin and hair pin combination.
4. Swing hitch pole jack up and secure with chained pin.
5. Rotate hitchpole jack out of the way and secure with chained pin.
6. Clean the SMV, lights and reflectors.
7. Maintain a safe speed. Slow down when cornering and on rough roads.
8. Slow down and pull off to the side of the road when meeting other traffic.
9. Use hazard flashers on tractor unless prohibited by law.

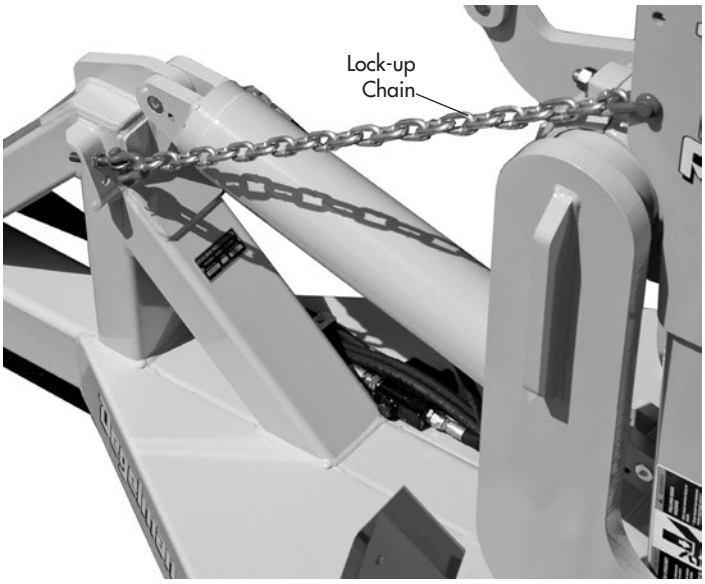

Storage

⚠ STORAGE SAFETY

- Store unit in an area away from human activity.
- Do not permit children to play around the stored unit.

STORAGE

After the season's use, completely inspect all major systems of the machine. Repair or replace any worn or damaged components to prevent unnecessary down time at the beginning of next season.

Since the unit can be used in extremely adverse conditions during the season, the machine should be carefully prepared for storage to ensure that all dirt, mud, debris and moisture has been removed.

Follow this procedure when preparing to store:

1. Wash the entire machine thoroughly using a water hose or pressure washer to remove all dirt, mud, debris or residue.
2. Inspect all moving parts to see if anything has become entangled in them. Remove the entangled material.
3. Lubricate all grease fittings to remove any moisture in the bearings.
4. Inspect all hydraulic hoses, fittings, lines, couplers and valves. Tighten any loose fittings. Replace any hose that is badly cut, nicked or abraded or is separating from the crimped end of the fitting.
5. Touch up all paint nicks and scratches to prevent rusting.
6. Oil the exposed rams on the hydraulic cylinders to prevent rusting.
7. Select an area that is dry, level and free of debris.
8. Follow the procedure given in "Preparation" when unhooking.

⚠ STORAGE SAFETY - DECALS

- Keep safety decals and signs clean and legible at all times.
- Replace safety decals and signs that are missing or have become illegible.
- Replaced parts that displayed a safety sign should also display the current sign.
- Safety decals or signs are available from your Dealer Parts Department. Safety decals will be available upon request.

REPLACEMENT DECALS AND REFLECTORS

PART NO.	DESCRIPTION	QTY.
142380	Decal, Danger - Falling Arm	2
142381	Decal, Danger - Falling Hook	2
142382	Decal, Warning - Upending	2
142383	Decal, Caution - 6 Point Safety	1
142009	Decal, Degelman - 3-3/4" x 16-1/4"	4
142557	Reflector Tape - Amber, 2" x 9"	2
142556	Reflector Tape - Red, 2" x 9"	2
142650	Reflector Tape - Fluorescent, 2" x 9"	2

TROUBLESHOOTING

In the following section, we have listed some of the problems, causes and solutions that you may encounter.

If you encounter a problem that is difficult to solve, even after having read through this troubleshooting section, please call your local dealer or distributor. Before you call, have this manual and the serial number from your unit ready.

PROBLEM	CAUSE	SOLUTION
Hydraulics creep down during operation.	Tractor hydraulic leak.	To verify, raise both arms, disconnect at tractor and observe if arms creep down. If not, repair tractor hydraulics.
	Damaged hose or loose fittings.	Search for leaks with a piece of paper (not by hand). Repair as necessary.
	Hydraulic cylinder leak.	Replace seals or damaged components.
Arms raise too slowly.	Hydraulic pressure from tractor too low.	Check pressure, should be 1500-2500 psi.
	Restriction in hose.	Disconnect & blow out lines with compressed air.
	External hydraulic leak.	Repair as needed.
Oil accumulation on cylinder shaft.	Hydraulic cylinder leak.	Replace seals or damaged components.
	Oil bypassing seals.	Seal manufacturer advises that small amounts of oil getting past seals is desirable. If problem becomes excessive, replace seals.
Tractor stalls.	Insufficient Tractor horsepower.	100 hp recommended minimum.

⚠ MAINTENANCE SAFETY

- Review the Operator's Manual and all safety items before working with, maintaining or operating the Rock Picker.
- Lower rear arm and hook arm to ground, stop the tractor engine, place all controls in neutral, set park brake, remove ignition key before servicing, adjusting, repairing or maintaining.
- Clear the area of bystanders, especially children, when carrying out any maintenance and repairs or making adjustments.
- Place safety stands or large blocks under the frame before removing tires or working beneath the machine.
- Be careful when working around or maintaining a high-pressure hydraulic system. Wear proper eye and hand protection when searching for a high-pressure hydraulic leak. Use a piece of wood or cardboard as a backstop when searching for a pin hole leak in a hose or a fitting.

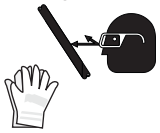

- Always relieve pressure before disconnecting or working on hydraulic system.

⚠ TIRE SAFETY

1. Failure to follow proper procedures when mounting a tire on a wheel or rim can produce a blow out which may result in serious injury or death.

2. Do not attempt to mount a tire unless you have the proper equipment and experience to do the job.

3. Have a qualified tire dealer or repair serviceman perform required tire maintenance.

⚠ HYDRAULIC SAFETY

1. Always place all tractor hydraulic controls in neutral before dismounting.

2. Make sure that all components in the hydraulic system are kept in good condition and are clean.

3. Replace any worn, cut, abraded, flattened or crimped hoses and metal lines.

4. Do not attempt any makeshift repairs to the hydraulic lines, fittings or hoses by using tape, clamps or cements. The hydraulic system operates under extremely high-pressure. Such repairs will fail suddenly and create a hazardous and unsafe condition.

5. Wear proper hand and eye protection when searching for a high-pressure hydraulic leak. Use a piece of wood or cardboard as a backstop instead of hands to isolate and identify a leak.

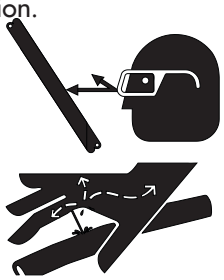

6. If injured by a concentrated high-pressure stream of hydraulic fluid, seek medical attention immediately. Serious infection or toxic reaction can develop from hydraulic fluid piercing the skin surface.

7. Before applying pressure to the system, make sure all components are tight and that lines, hoses and couplings are not damaged.

• Think SAFETY! Work SAFELY

TORQUE SPECIFICATIONS

CHECKING BOLT TORQUE

The tables shown below give correct torque values for various bolts and capscrews. Tighten all bolts to the torques specified in chart unless otherwise noted. Check tightness of bolts periodically, using bolt torque chart as a guide. Replace hardware with the same strength (Grade/Class) bolt.

IMPERIAL TORQUE SPECIFICATIONS

(based on "Zinc Plated" values)



Size	Grade 5	Grade 8
	lb.ft (*N.m*)	lb.ft (*N.m*)
1/4"	**7 (*10*)**	**10 (*14*)**
5/16"	15 (*20*)	20 (*28*)
3/8"	**25 (*35*)**	**35 (*50*)**
7/16"	40 (*55*)	60 (*80*)
1/2"	**65 (*90*)**	**90 (*120*)**
9/16"	90 (*125*)	130 (*175*)
5/8"	**130 (*175*)**	**180 (*245*)**
3/4"	230 (*310*)	320 (*435*)
7/8"	**365 (*495*)**	**515 (*700*)**
1"	550 (*745*)	770 (*1050*)
1-1/8"	**675 (*915*)**	**1095 (*1485*)**
1-1/4"	950 (*1290*)	1545 (*2095*)
1-3/8"	**1250 (*1695*)**	**2025 (*2745*)**
1-1/2"	1650 (*2245*)	2690 (*3645*)

METRIC TORQUE SPECIFICATIONS

(based on "Zinc Plated" values)



Size	Class 8.8	Class 10.9
	lb.ft (*N.m*)	lb.ft (*N.m*)
M6	**7 (*10*)**	**10 (*14*)**
M8	16 (*22*)	23 (*31*)
M10	**30 (*42*)**	**45 (*60*)**
M12	55 (*75*)	80 (*108*)
M14	**90 (*120*)**	**125 (*170*)**
M16	135 (*185*)	195 (*265*)
M18	**190 (*255*)**	**270 (*365*)**
M20	265 (*360*)	380 (*515*)
M22	**365 (*495*)**	**520 (*705*)**
M24	460 (*625*)	660 (*895*)
M27	**675 (*915*)**	**970 (*1315*)**
M30	915 (*1240*)	1310 (*1780*)
M33	**1250 (*1695*)**	**1785 (*2420*)**
M36	1600 (*2175*)	2290 (*3110*)

HARDWARE/HOSE SPECIFICATIONS

Unless otherwise stated:

- Hardware - Hex, Plated GR5 UNC or P8.8 (metric)
- Hydraulic Hoses - 3/8 & 1/2, ends come with 3/4 JIC female swivel.

WHEEL NUT & WHEEL BOLT TORQUE

BOLT PATTERNS

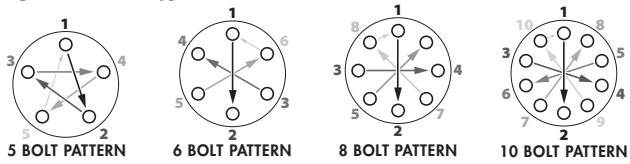

Wheel Nut/Bolt Torque

Size	lb.ft (N.m)
9/16	120-130 (165-175)
5/8	185-190 (250-260)
3/4	280-300 (380-405)

Wheel Tightening Procedure

1. Install and **hand tighten** nuts/bolts.
2. Tighten to approx **20% Torque** value using the 10 Bolt **Star or CrissCross** pattern shown above.
3. Tighten to **Full Torque** value using the **Star or CrissCross** pattern.
4. If applicable, install **Rear Locknuts** using **Wheel Torque Values**.

HYDRAULIC FITTING TORQUE

Hydraulic Fitting Torque*

Size	lb.ft (N.m)
1/2	34 (46)
3/4	75 (100)
7/8	90 (122)

* The torque values shown are based on lubricated connections as in reassembly.

Tightening Flare Type Tube Fittings

1. Check flare and flare seat for defects that might cause leakage.
2. Align tube with fitting before tightening.
3. Lubricate connection and hand tighten swivel nut until snug.
4. To prevent twisting the tube(s), use two wrenches. Place one wrench on the connector body and with the second tighten the swivel nut to the torque shown.

FLUIDS AND LUBRICANTS

1. Grease: Use an SAE multi-purpose grease with extreme pressure (EP) performance. Also acceptable is an SAE multi-purpose lithium base grease.
2. Storing Lubricants: Your machine can operate at top efficiency only if clean lubricants are used. Use clean containers to handle all lubricants. Store them in an area protected from dust, moisture and other contaminants.

GREASING

1. Use only a hand-held grease gun for all greasing.
2. Wipe grease fitting with a clean cloth before greasing, to avoid injecting dirt.
3. Replace and repair broken fittings immediately.
4. If fittings will not take grease, remove and clean thoroughly. Also clean lubricant passageway. Replace fitting if necessary.
5. Inject grease until you see grease being expelled from the bearing or bushing areas.

TIRES

Tire pressure:

Current - Tire, 12.5L-15-12 Ply	90 PSI (620 kPa)
Previous - Tire, 12.5L-15-8 Ply	36 PSI (250 kPa)

Wheel Nut / Bolt torque:

120-130 ft.lbs (165-175 N.m)

SERVICE INTERVALS

25 Hrs.

Grease Hook Arm Bearings - 2 locations
(nipple located on top of cast bearing housing)

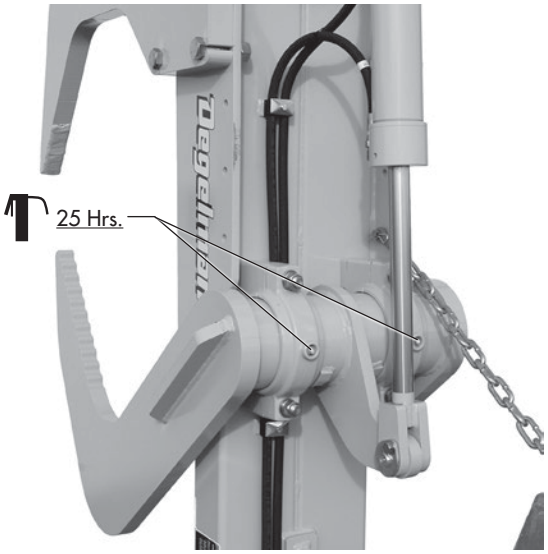

Annually

check hardware/bolt tightness - general

grease wheel hub nipple - 2 locations

check/repack wheel bearings - 2 locations
(use a good grade of bearing grease)

LOCK-UP CHAIN ADJUSTMENTS

To set the correct tension on the lock-up chain, proceed as follows:

1. Fully retract the rear arm hydraulic cylinder.

⚠ **WARNING:** Stay clear of the machine and surrounding area when unloading. Keep others away.

2. Loosen jam nut/eye bolt combination.
3. Attach chain to hole in rear arm.
4. Start tightening the chain by turning the lower jam nut on the chain until there is a slight amount of slack.
5. Secure this setting by tightening the top jam nut.

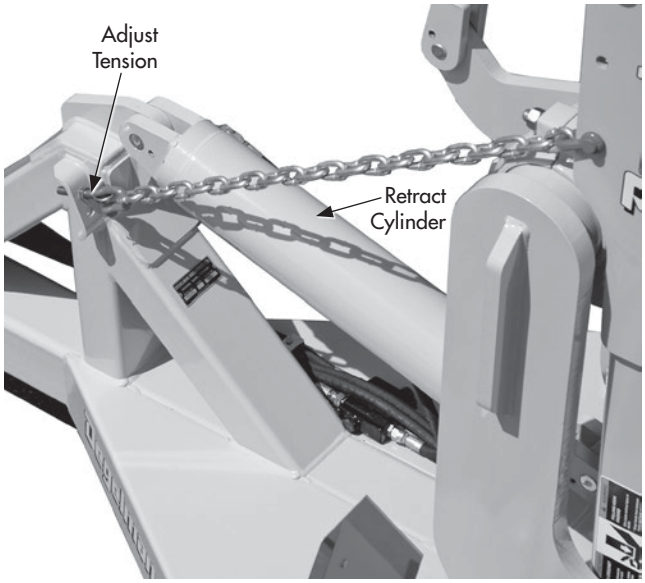

TOOTH REPAIR and HARD SURFACING

Hard surfacing should be done on a regular basis to prevent excess wear on teeth.

Build up worn portions of teeth to restore them to their original contour using a low hydrogen 7018 build up rod.

Resurface teeth (a double pass is recommended) using hard surface welding rods. A hardness of RC 45-50 is desirable.

NOTE: Special hard surfacing rod kits are available through Degelman Industries Ltd. or your local Degelman dealer.

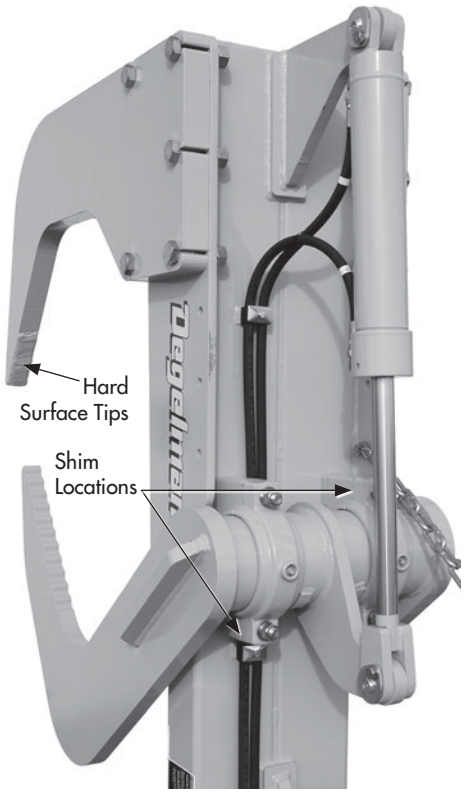

SPACER SHIM REMOVAL - ROCKSHAFT

When execssive wear is apparent between the rockshaft and cast bearings, remove the spacer shims on both sets of bearings.

Loosen bolts and pull out slotted shims.

WHEEL HUB REPAIR

IMPORTANT: *Be sure to block up frame section securely before removing tires.*

DISASSEMBLY

1. Carefully pry off dust cap.
2. Remove cotter pin from nut.
3. Remove nut and washer.
4. Pull off spindle.
5. Dislodge the inner cone bearing and dust seal.
6. Inspect cups that are press fitted into hub for pits or corrosion and remove if necessary.
7. Inspect and replace defective parts with new ones.

ASSEMBLY

1. If cups need replacing, be careful to install them gently and evenly into hub until they are fully seated.
2. Apply a thick wall of grease inside hub. Pack grease in cones.
3. Install dust seal as illustrated, and inner cone.
4. Position hub onto spindle and fill surrounding cavity with grease.
5. Assemble outer cone, washer and nut.
6. Tighten nut while rotating hub until there is a slight drag.
7. Turn nut back approximately 1/4 turn to align cotter pin hole with notches on nut. Note: Hub should rotate freely. If not, repeat step 6.
8. Install cotter pin and bend legs sideways over nut.
9. Fill dust cap half full of grease and gently tap into position.
10. Pump grease into hub through grease fitting until lubricant can be seen from dust seal.

COMMON SPINDLE AND HUB COMPONENTS

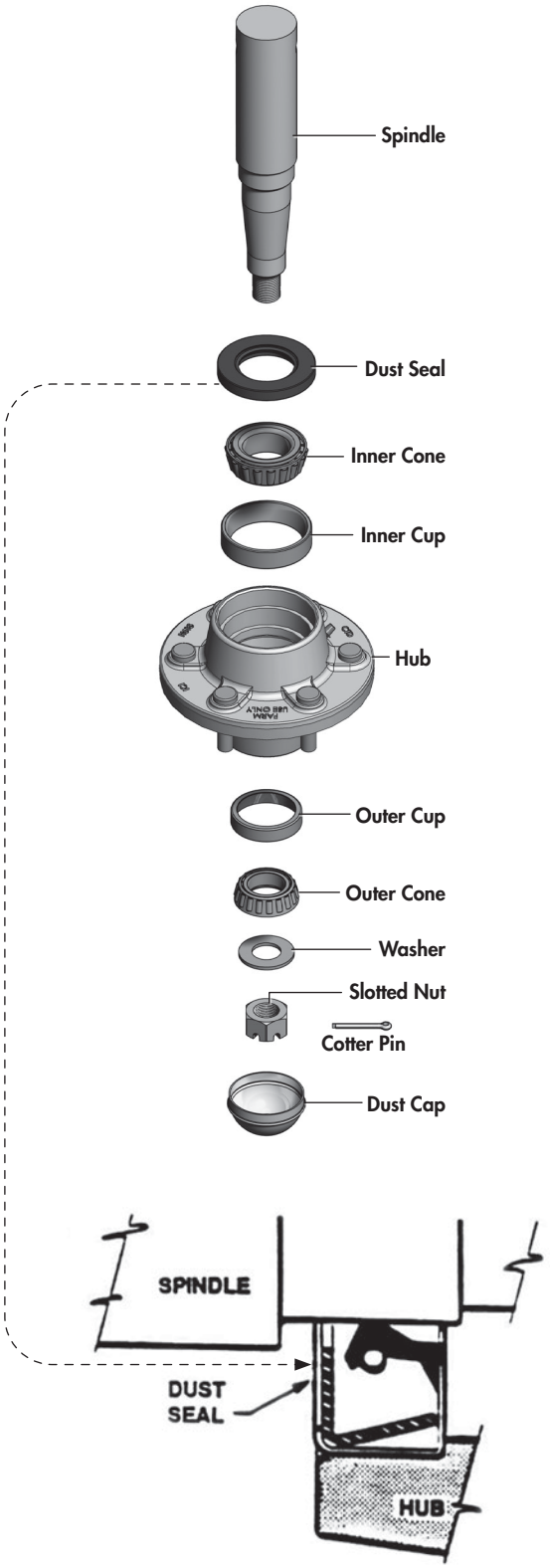

HYDRAULIC CYLINDER REPAIR

PREPARATION

When cylinder repair is required, clean off unit, disconnect hoses and plug ports before removing cylinder.

When removed, open the cylinder ports and drain the cylinder's hydraulic fluid.

Examine the type of cylinder. Make sure you have the correct tools for the job.

You may require the following tools:

- *Proper **Seal Kit***
- *Rubber Mallet*
- *Screwdriver*
- *Punch*
- *Pliers*
- *Emery cloth*
- *Torque Wrench*

Types of Cylinders
(Wire Ring / Threaded Head)

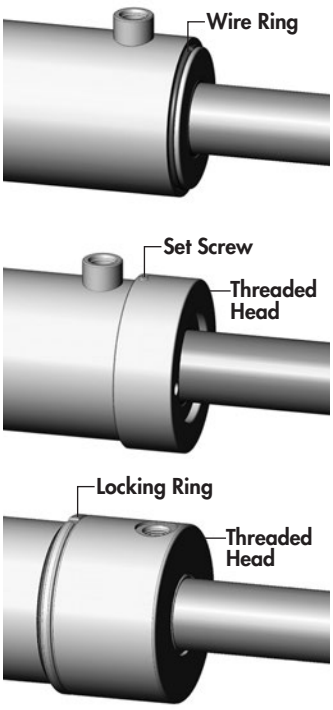

REPAIRING A WIRE RING CYLINDER

1. Retract the rod assembly.
2. Remove the external steel wire ring.

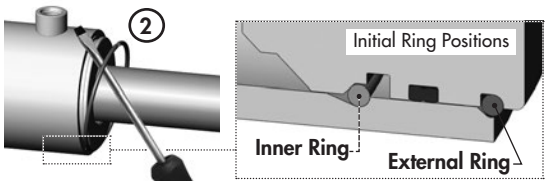

3. Remove any dirt that may have accumulated on the cylinder head.
4. Using the mallet and punch, push the head into the cylinder tube until the internal tube groove is fully exposed. This will also move the internal wire ring into its removal position.

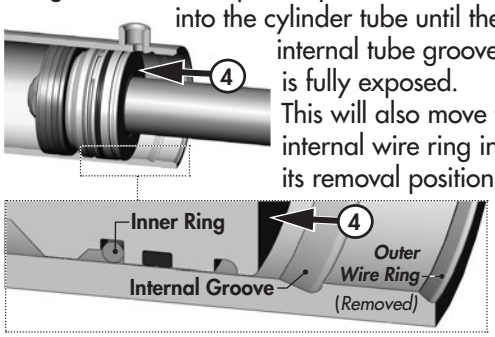

5. Take the plastic removal ring from the seal kit:
   a) Straighten the ring and remove any kinks or excessive curl to make installation easier and prevent it from falling out.
   b) Insert the removal ring into the internal groove with the feathered end pointing into the tube.

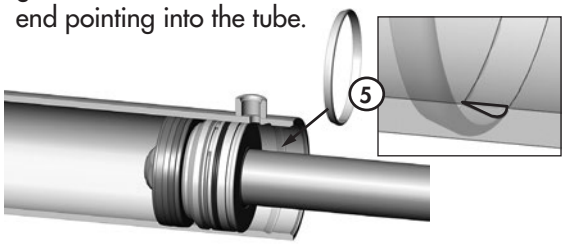

   c) Use a screwdriver or a finger to hold one end of the ring in the groove while fitting the other end of the ring into the groove. The tips should snap in together. Ensure it is secure and fully seated before the next step.

   IMPORTANT: It is important to e*nsure the removal ring is completely in the groove before pulling the rod out. If the ring sticks out it will get stuck between the head and tube.*

6. a) Extend the rod to pull head out of tube. If the rod does not pull out easily, push the head back in and ensure the ring is properly in the groove. Replace ring if necessary.

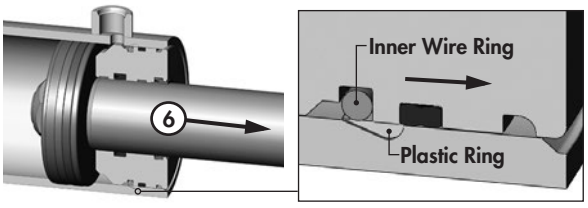

   Note: *Excessive force will not overcome a jammed ring and could damage the cylinder.*

   b) Completely remove rod and head from tube.

7. Remove plastic removal ring from the cylinder tube.

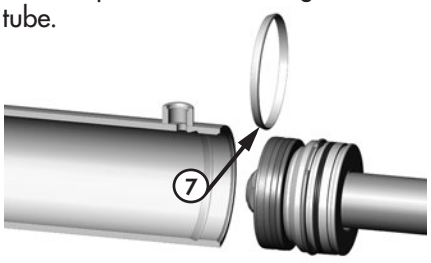

8. Remove locknut, piston and head from rod.

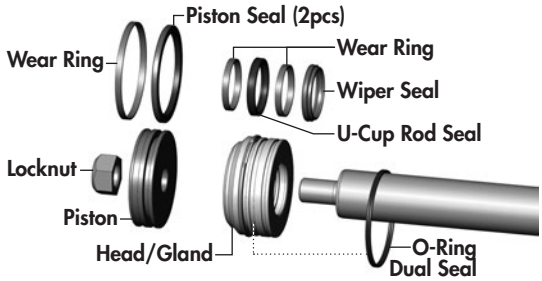

9. a) Inspect and replace all of the seals with new components.

   b) Inspect the inside of the cylinder barrel, piston, rod and other polished parts for burrs and scratches. Smooth areas as needed with an emery cloth.

   c) During re-assembly of head/gland assembly, leave the outer O-Ring Dual Seal loose on the rod to re-install at a later step.

10. Replace piston and torque the locknut to required value. (Refer to chart below)

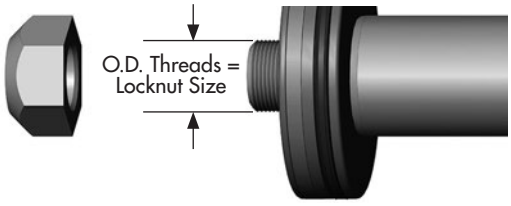

LOCKNUT SIZE (PISTON)	TORQUE VALUE
3/8 - 24 UNF	25-30 lb.ft (35-42 *N.m*)
1/2 - 20 UNF	**40-60 lb.ft *(55-80 N.m)***
5/8 - 18 UNF	95-105 lb.ft (130-140 *N.m*)
3/4 - 16 UNF	**175-225 lb.ft *(240-305 N.m)***
7/8 - 14 UNF	200-275 lb.ft (270-370 *N.m*)
1 - 14 UNF	**300-380 lb.ft *(405-515 N.m)***
1 1/8 - 12 UNF	400-500 lb.ft (540-675 *N.m*)
1 1/4 - 12 UNF	**500-600 lb.ft *(675-810 N.m)***
1 1/2 - 12 UNF	700-800 lb.ft (950-1085 *N.m*)
1 3/4 - 12 UNF	**800-900 lb.ft *(1085-1220 N.m)***

11. a) Install the supplied band clamp to compress the inner wire ring on the head/gland assembly so it will fit into the tube.

    Note: Make sure the cam of the band clamp is not overtop of the gap in the ring.

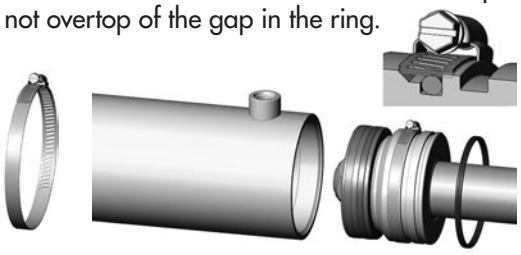

11. b) Tighten the band clamp to ensure the wire ring is fully seated. Then, loosen the clamp approx. 1/2 a turn to allow band clamp to slide during final assembly.

12. Lubricate the cylinder tube and piston seals.

13. Insert the piston into the tube. Tap the cylinder head into the tube until the clamp slides over and the inner wire ring is inside the tube.

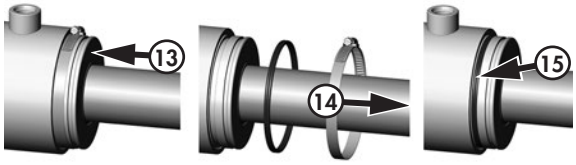

14. Loosen the clamp and remove.

15. Install the O-Ring Dual seal.

16. Tap the head the rest of the way until the end is flush with the tube.



IMPORTANT: The head/gland must be inserted until it is flush with the tube to allow the inner wire ring to snap into its seated position in the internal cylinder groove. Failure to insert the head flush as shown will result in the head and rod assembly coming out of the tube when pressure is applied to the cylinder.

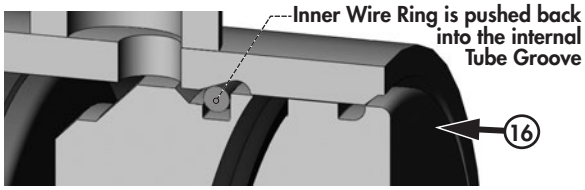

17. Pull the rod out to expose the external wire ring groove in cylinder head, and then install the external ring.

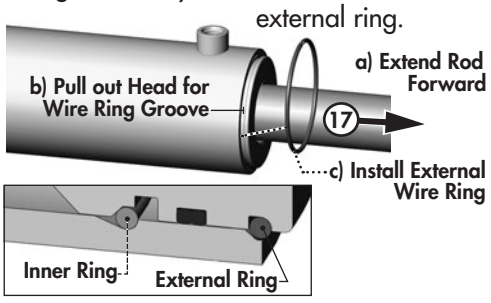

18. Before using the cylinder, ensure that you double check your work.

REPAIRING A THREADED HEAD CYLINDER

Set Screw Style

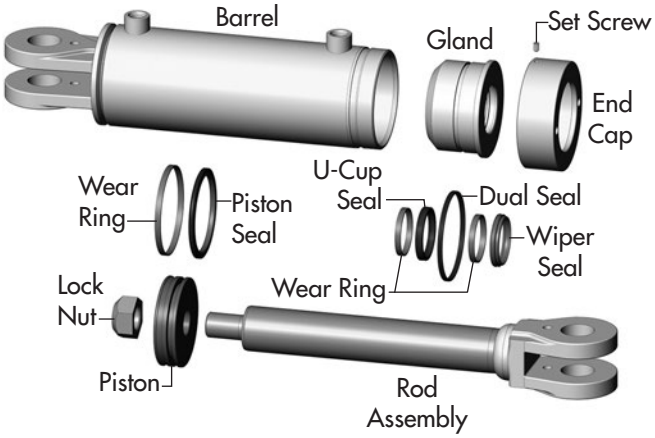

DISASSEMBLY

1. Loosen Set Screw and turn off end cap.
2. Carefully remove piston/rod/gland assemblies.
3. Disassemble the piston from the rod assembly by removing lock nut.

NOTE: *DO NOT* clamp rod by chrome surface.

4. Slide off gland assembly & end cap.
5. Remove seals and inspect all parts for damage.
6. Install new seals and replace damaged parts with new components.
7. Inspect the inside of the cylinder barrel, piston, rod and other polished parts for burrs and scratches. Smooth areas as needed with an emery cloth.

REASSEMBLY

1. Reinstall rod through end cap & gland assembly.
2. Secure piston to rod with lock nut. Torque lock nut to proper value (refer to chart on previous page for proper torque value).
3. Lube inside of barrel, piston seals, and gland seals with hydraulic oil.
4. With cylinder body held gently in a vise, insert piston, gland, end cap and rod combination using a slight rocking motion.
5. Apply Loctite anti-seize before installing cylinder end cap.
6. Torque cylinder end cap to 440 lb.ft (600 N.m).
7. Tighten Set Screw on end cap to 6 lb.ft (8 N.m).

REPAIRING A THREADED HEAD CYLINDER

Locking Ring Style

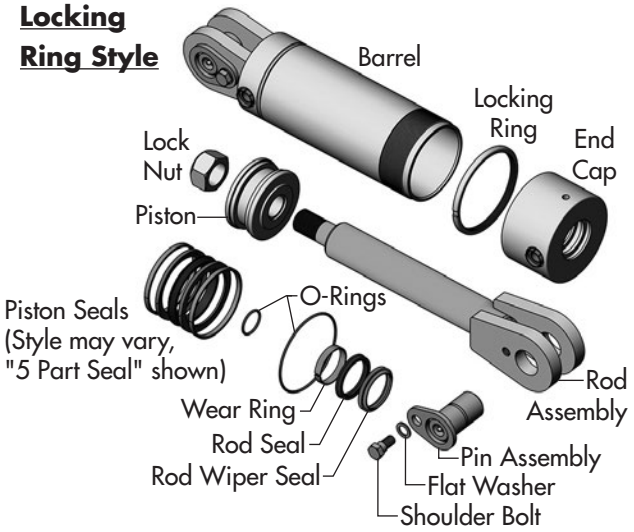

DISASSEMBLY

1. Loosen Locking Ring and turn off end cap.
2. Carefully remove piston, rod and end cap.
3. Disassemble the piston from the rod assembly by removing lock nut.

NOTE: *DO NOT* clamp rod by chrome surface.

4. Slide off end cap.
5. Remove seals and inspect all parts for damage.
6. Install new seals and replace damaged parts with new components.
7. Inspect the inside of the cylinder barrel, piston, rod and other polished parts for burrs and scratches. Smooth areas as needed with an emery cloth.

REASSEMBLY

1. Reinstall rod through end cap.
2. Secure piston to rod with lock nut. Torque lock nut to proper value (refer to chart on previous page for proper torque value).
3. Thread lock ring fully onto barrel.
4. Lube inside of barrel and piston seals with hydraulic oil.
5. With cylinder body held gently in a vise, insert piston, end cap and rod combination using a slight rocking motion.
6. Turn end cap fully against lock ring then back off end cap to align ports.
7. Tighten Locking Ring against end cap using a punch and hammer.

SPECIFICATIONS

MODEL - Rock Digger RD320

MACHINE WEIGHT: - 2400 lbs. (1090 kg)

TRACTOR REQUIREMENTS:

- 100 horsepower (75 kW) minimum
- Hydraulic pressure output 1500-2500 psi (10,300-17,300 kPa)

DIMENSIONS:

- Overall height (in transport) 7′-6″ (2.3m)
- Overall width (in transport) 8′-4″ (2.5m)
- Overall length (in transport) 13′-6″ (4.1m)
- Overall length (in operation) 17′-2″ (5.3m)
- Frame clearance 12″ (305mm)
- Tooth clearance (in transport) 5′-10″ (I.8m)

FRAME CONSTRUCTION:

- 1/4″ (6.4mm) wall hollow structural steel tubing & 3/16″ (4.5mm) plate

WHEEL/HUBS:

- Two 12.5 L x 15-12 ply tubeless type tires
- 6 bolt rim
- Heavy duty hubs - greaseable

PENETRATING TEETH:

- 32″ (813mm)
- 2″ (50mm) plate

HOOK ARM TRANSPORT TEETH:

- Dual serrated teeth
- Hydraulically activated
- 1-1/ 2″ (38mm) plate

HYDRAULICS:

- Lift /dig cylinder - 5″ x 24″
- Hook arm cylinder - 3″ x 16″
- Hoses 3/8″ (9.5mm) 2 wire braid construction
- JIC/ORB fittings
- Pressure relief valve on 5″ x 24″ cylinder circuit

rock digger
RD320

TABLE OF CONTENTS - PARTS SECTION

Overview	*21*
Pole/Frame Components	*22*
Rear Assembly Components	*23*
Hydraulic Routing	*24*
Hydraulic Cylinders	*25*
Wheel Components	*26*
Warranty	*27-28*

⚠ IMPORTANT:



READ MANUAL

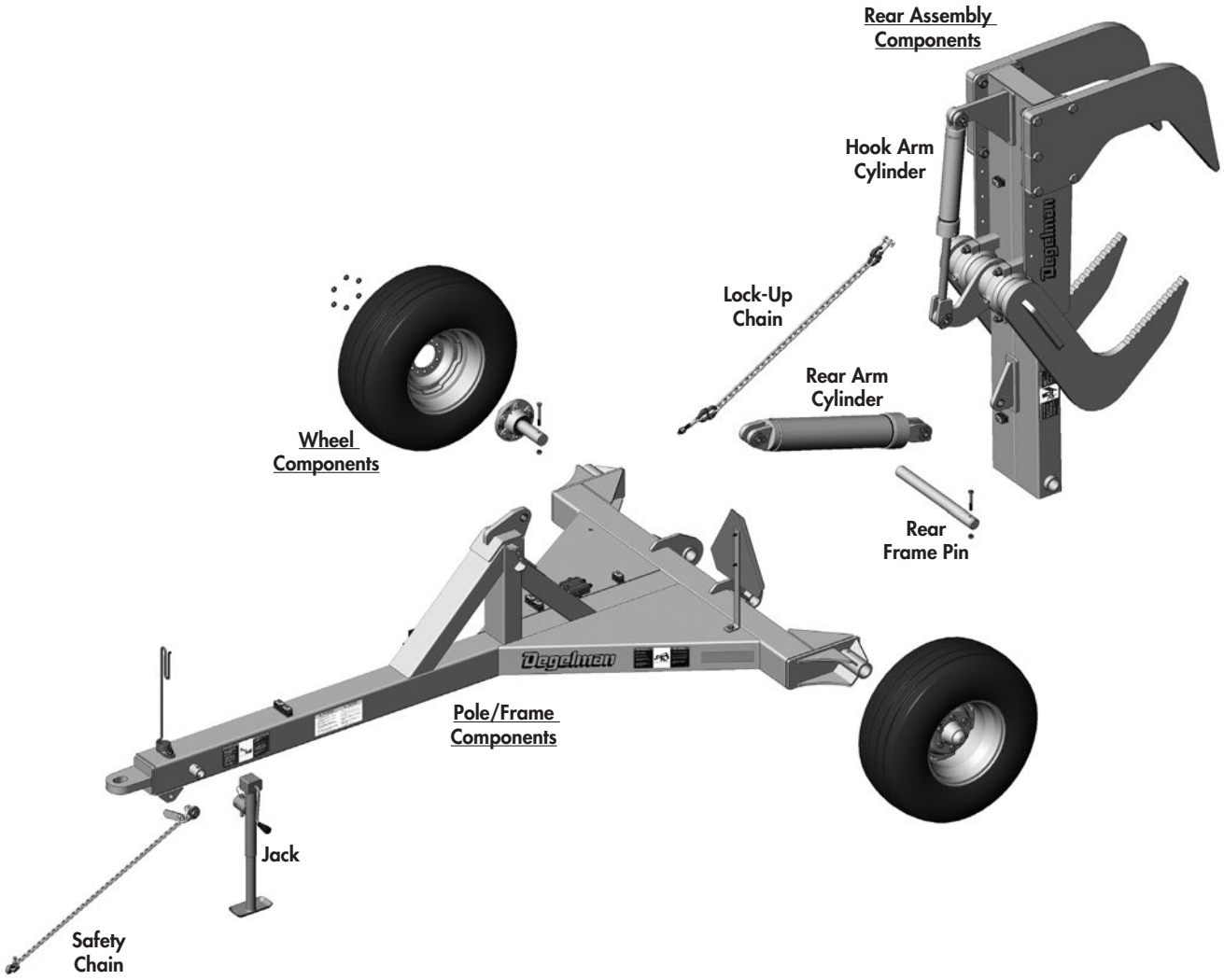

Pole/Frame Components

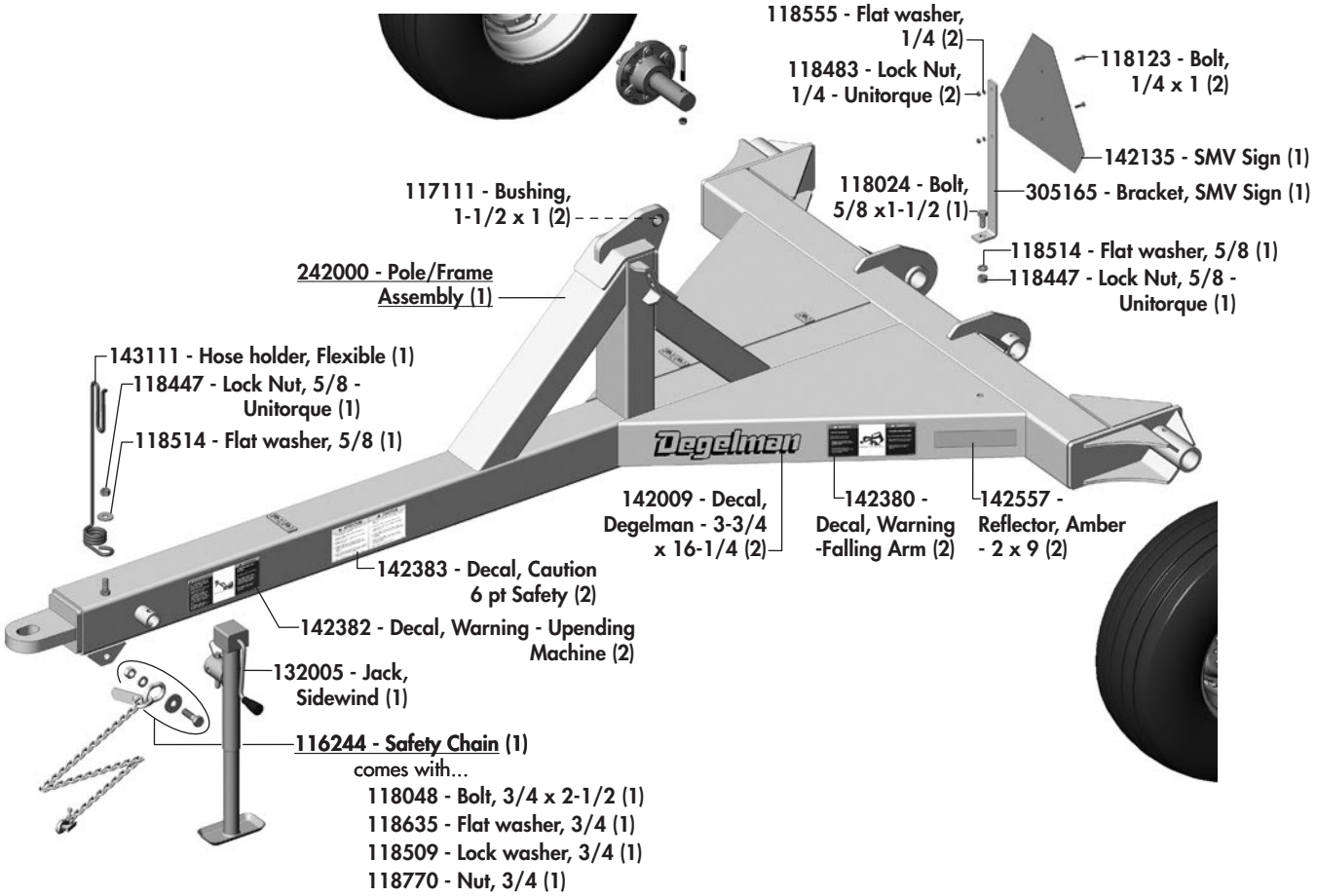

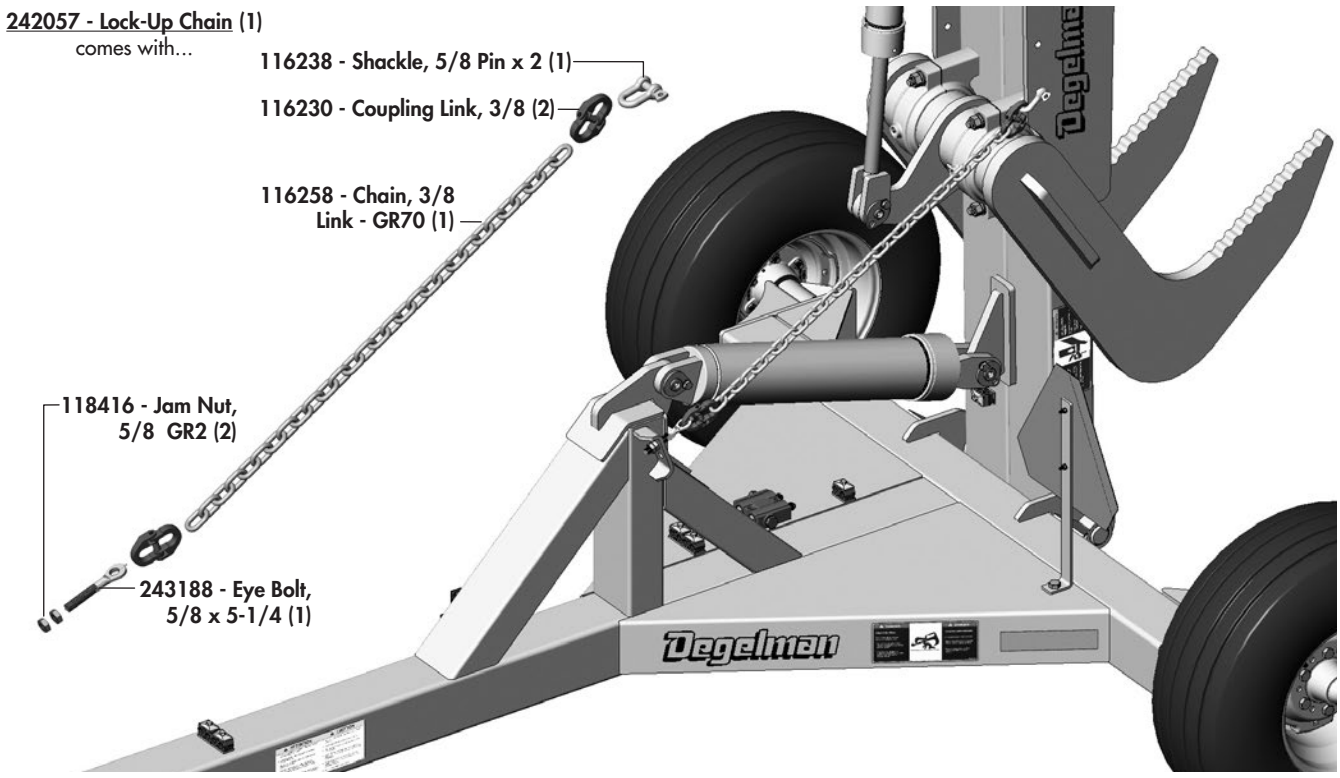

Rear Assembly Components

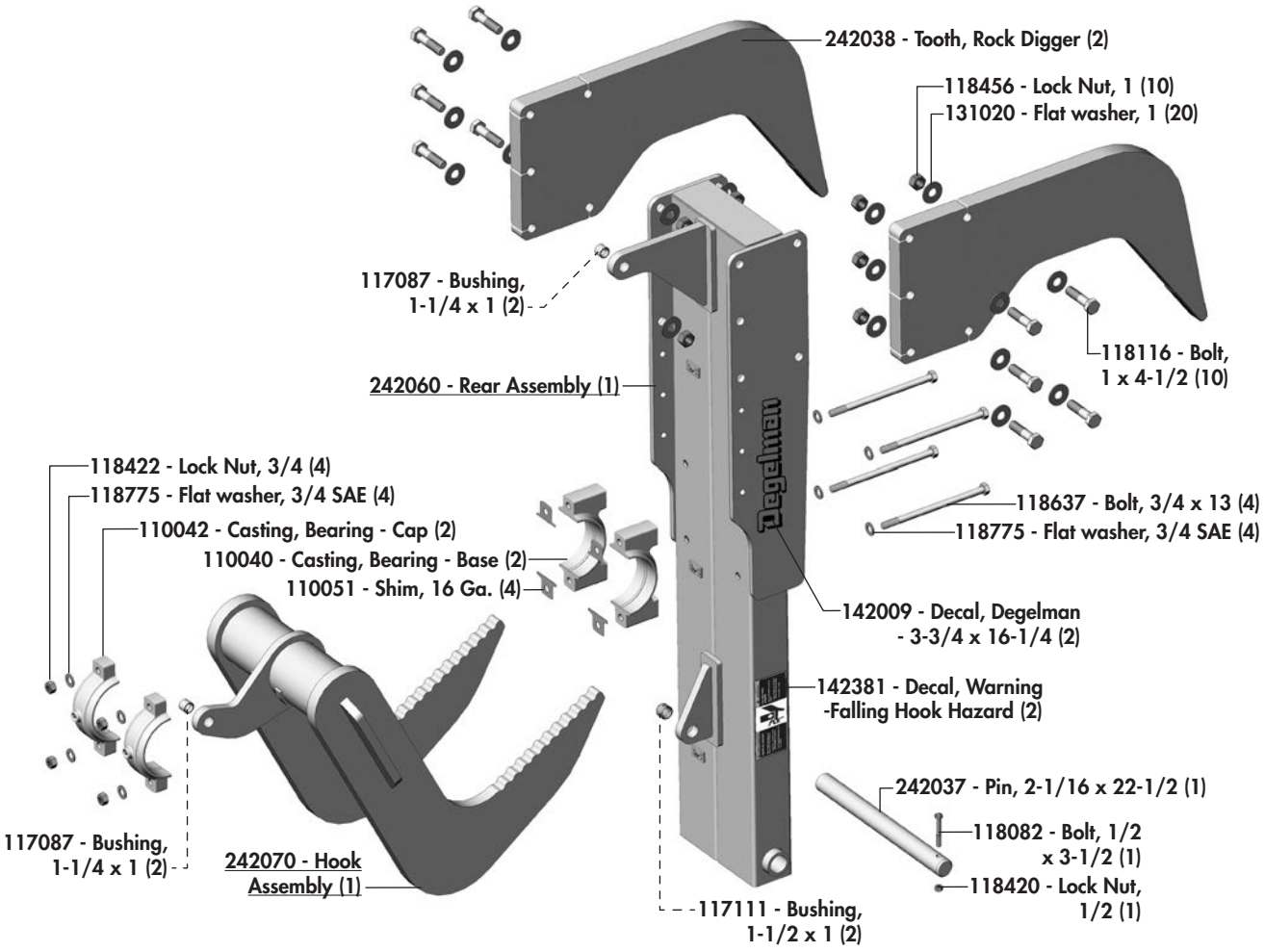

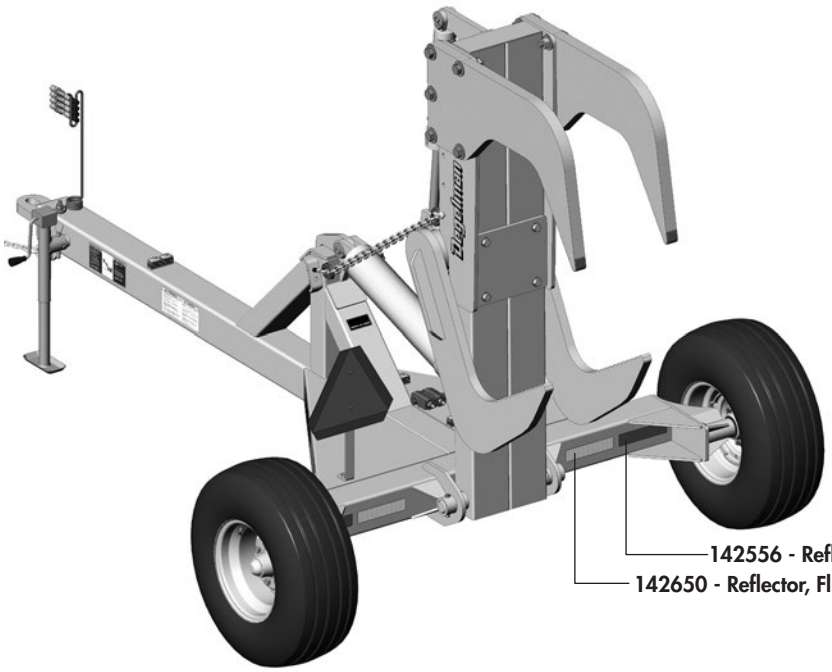

Hydraulic Routing

Hydraulic Cylinders

123195 - Cylinder, Hook Arm - 3 x 16 x 1-1/2 (1)

*(Previous)***122729 - Cylinder, Hook Arm (2)**

123203 - Cylinder, Rear Arm - 5 x 24 x 2-1/2 (1)

*(Previous)***122240 - Cylinder, Rear Arm (2)**

Required Hoses

(32) **126504 - Hose, 3/8 x 32 (2)**

(144) **126552 - Hose, 3/8 x 144 (2)**

(249) **126506 - Hose, 3/8 x 249 (2)**

Hydraulic Fittings Required



1 **141581 - Quick Coupler-m - 3/4 ORB (4)**

2 **141515 - Connector, 3/4 JIC-m x ORB (8)**

3 **141504 - 90° Elbow, 3/4 JIC-m x ORB (4)**

1500 2000 **141570 - Valve, D/RLF - 1500/2000, 3/4 ORB (1)**

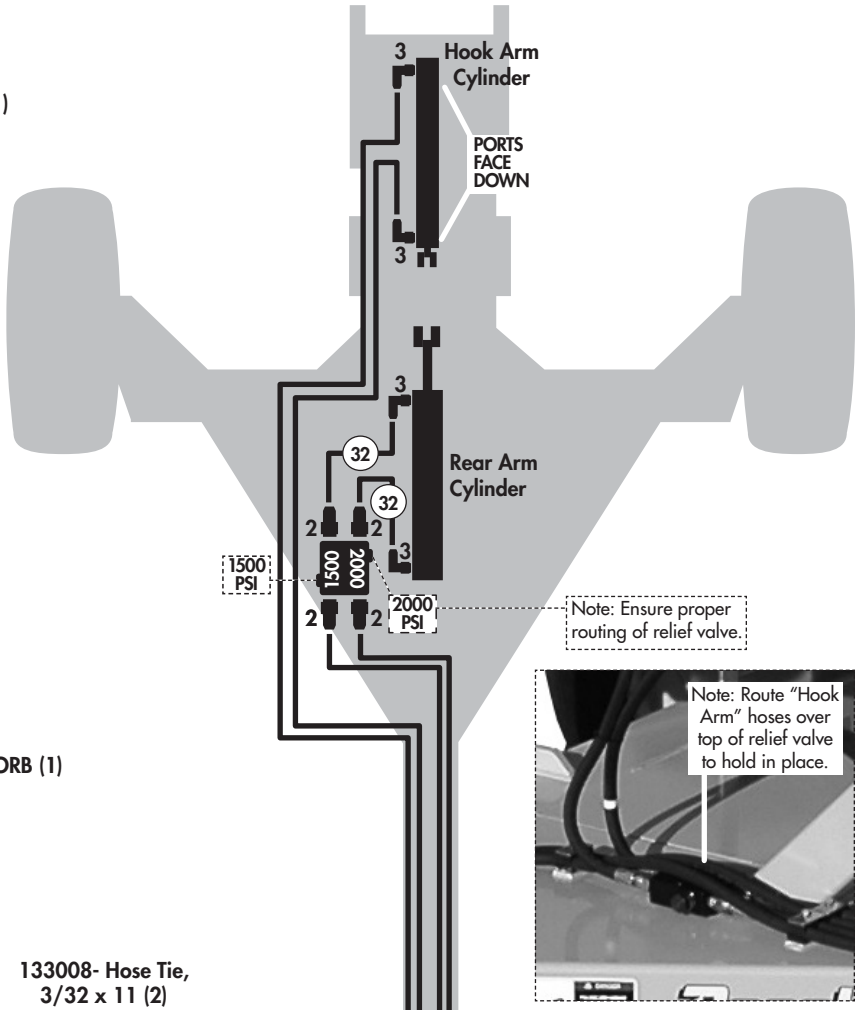

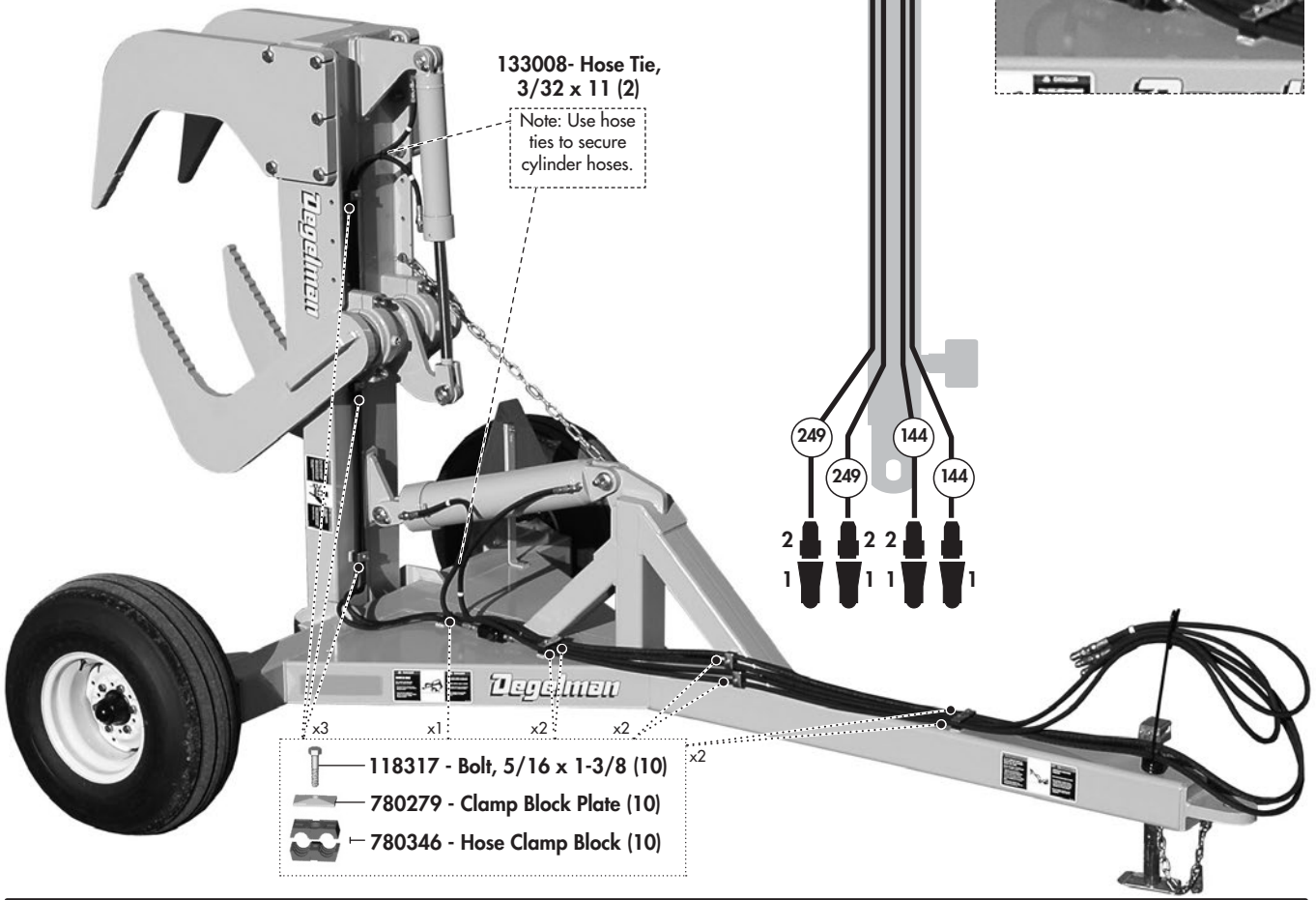

REAR ARM CYLINDER

123203 - Cylinder, Monarch - 5" x 24" x 2-1/2" (1)

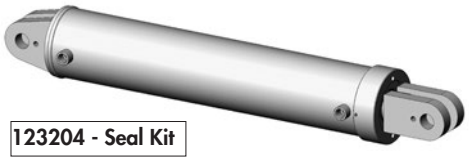

123204 - Seal Kit



Requires:
122787 - Pin, 1-1/4 x 3-3/16 (2)
118924 - Flat washer, .59" ID x .9" OD (2)
118796 - Shoulder bolt, 1/2 GR8 UNC (2)

PREVIOUS 2-1/2": 122240 - Cylinder, Rear Arm - 5 x 24 x 2-1/2

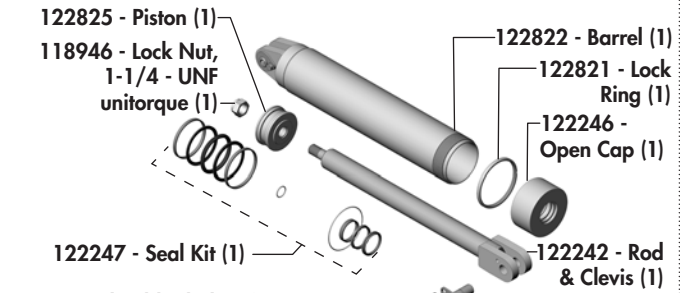

PREVIOUS 2": 122736 - Cylinder, Rear Arm - 5 x 24 x 2

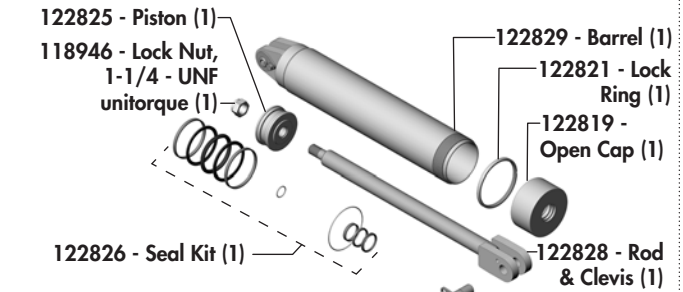

HOOK ARM CYLINDER

123195 - Cylinder, Monarch - 3 x 16 x 1-1/2 (2)

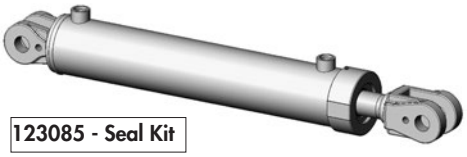

123085 - Seal Kit



Requires:
118930 - Pin, 1 x 2-13/16 (2)
118924 - Flat washer, .59" ID x .9" OD (2)
118796 - Shoulder bolt, 1/2 GR8 UNC (2)

PREVIOUS: 122729 - Cylinder, 3 x 16 x 1-1/2

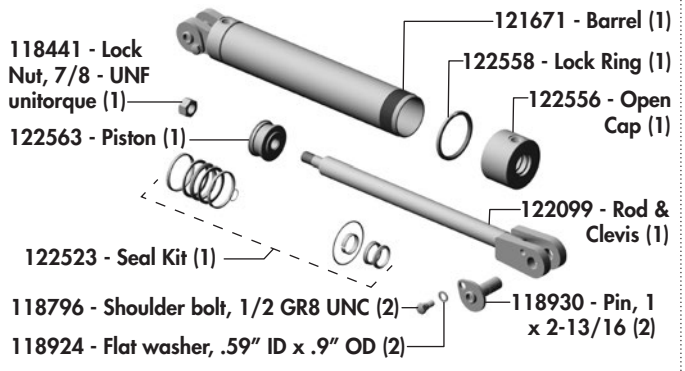

Wheel & Hub Components

WHEEL COMPONENTS (Left Side Shown)

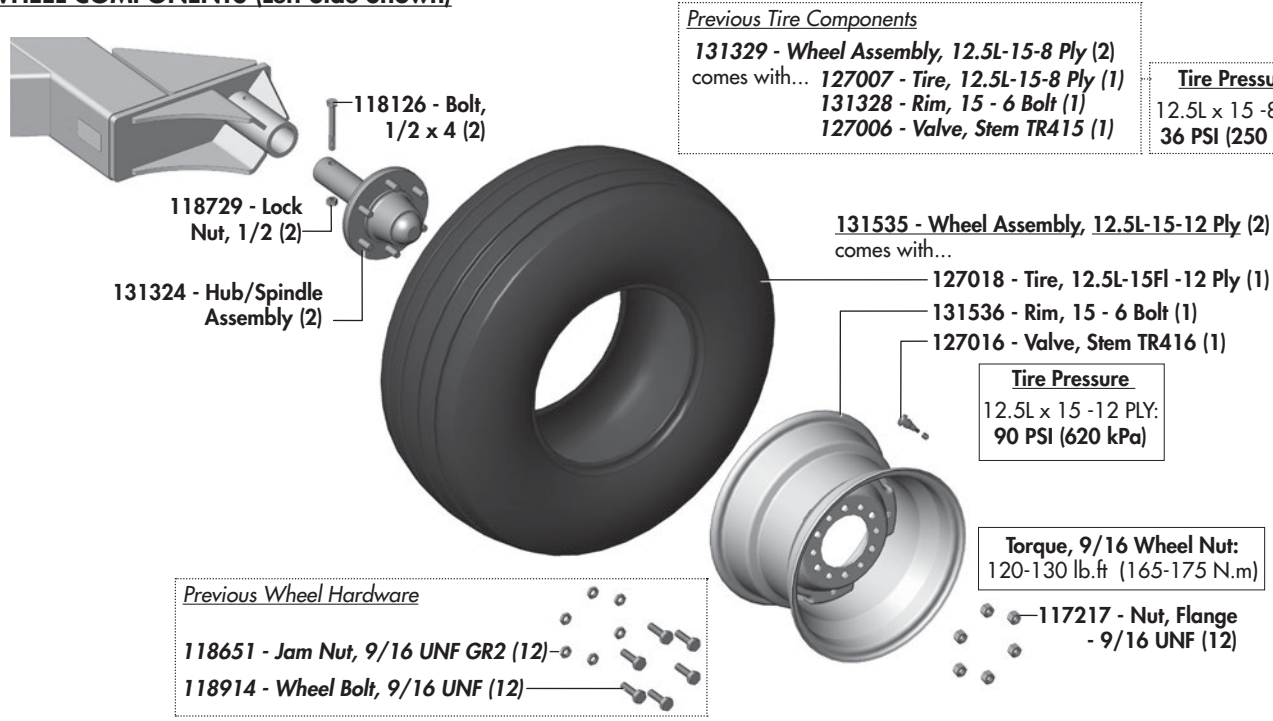

HUB/SPINDLE COMPONENTS

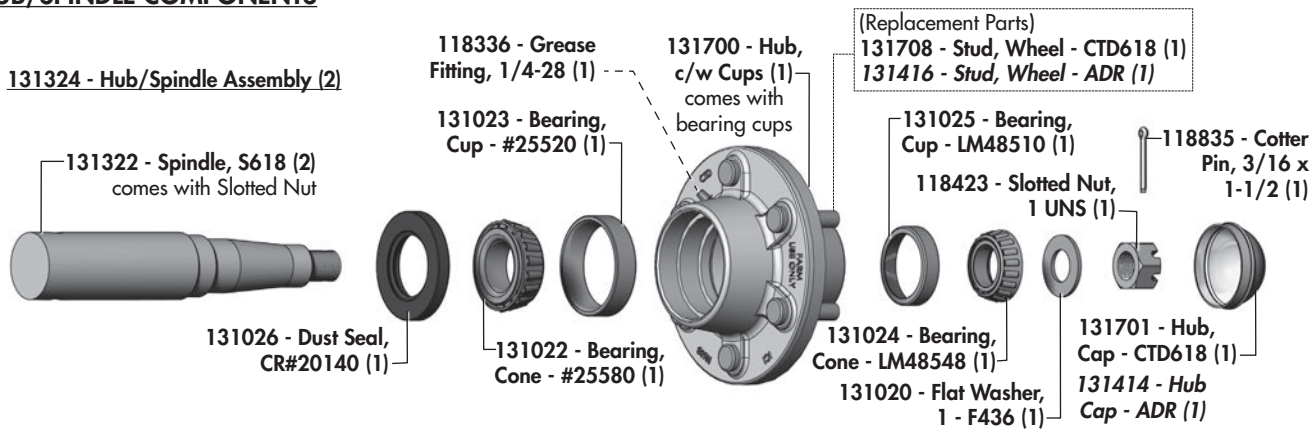

Warranty

Retail Customer's Responsibility Under Degelman Warranty.

It is the retail customer and/or Operator's responsibility to read the Operator's Manual, to operate, lubricate, maintain and store the equipment in accordance with all instructions and safety procedures. Failure of the operator to read the operators manual is a misuse of this equipment.

It is the retail customer and/or operators responsibility to inspect the product and to have any part(s) repaired or replaced when continued operation would cause damage or excessive wear to other parts or cause safety hazard.

It is the retail customer's responsibility to deliver the product to the authorized Degelman dealer, from whom he purchased it, for service or replacement of defective parts, which are covered by warranty. Repairs to be submitted for warranty consideration must be made within forty-five days of failure.

It is the Retail Customer's responsibility for any cost incurred by the dealer for hauling of the product for the purpose of performing a warranty obligation or inspection.

WARRANTY INFORMATION

Make certain the warranty registration card has been forwarded to:

Degelman Industries LP
Box 830 -272 Industrial Dr.
Regina, SK, Canada
S4P 3B1

Always give your dealer the serial number of your Degelman product when ordering parts or requesting service or other information.

The serial number is located on the machine as shown in the diagram below. In the space provided record the model number, the serial number and the date of purchase to assist your dealer in providing you with prompt and efficient service.

SERIAL NUMBER: _____

MODEL NUMBER: _____

DATE OF PURCHASE: _____

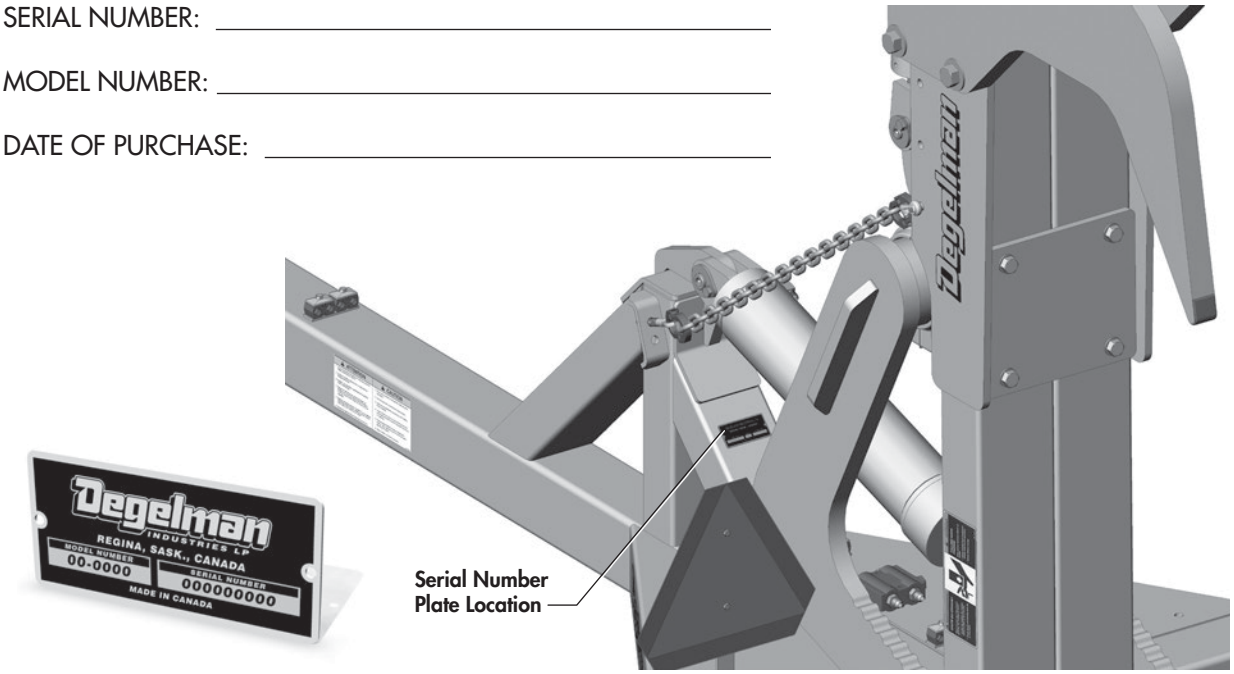

1 Year

Limited Warranty - Agricultural Products

Degelman Industries LP ("Degelman") warrants to the original purchaser of any new Degelman equipment, purchased from an authorized Degelman dealer, that the equipment will be free from defects in material and workmanship for a period of one (1) year from the date of delivery, for non-commercial use (including farm, institutional, government, and municipality) and (90) days from the date of delivery for commercial use. The obligation of Degelman to the purchaser under this warranty is limited to the repair or replacement of defective parts in the first (90) days and to the provision, but not the installation of replacement parts for the remainder of the year. Degelman reserves the right to inspect any equipment or parts which are claimed to have been defective in material or workmanship.

This warranty limits its replacement or repair coverage to what is consistent with the warranty of Degelman's suppliers of purchased components.

Replacement or repair parts installed in the equipment covered by this limited warranty are warranted for ninety (90) days from the date of delivery of such part or the expiration of the applicable new equipment warranty period, which ever occurs later. Warranted parts shall be provided at no cost to the user at an authorized Degelman dealer during regular working hours. Warranted replacement parts will either be replaced or rebuilt at Degelman's discretion.

Disclaimer of implied warranties & consequential damages

This warranty shall not be interpreted to render Degelman Industries LP liable for injury, death, property damage or damages of any kind, whether direct, consequential, or contingent to property. Without limiting the generality of the foregoing, Degelman shall not be liable for damages resulting from any cause beyond its reasonable control, including, without limitation, loss of crops, any expense or loss of labour, supplies, rental machinery or loss of use.

No other warranty of any kind whatsoever, express or implied is made with respect to this sale; and all implied warranties of merchantability and fitness for a particular purpose which exceed the obligations set forth in this written warranty are hereby disclaimed and excluded from this sale. This exclusion shall not apply in any jurisdiction where it is not permitted by law.

This limited warranty shall not apply:

1. If, in the sole opinion of Degelman, the unit has been subjected to misapplication, abuse, misuse, negligence accident or incorrect off-site machine set-up.
2. To any goods that have sustained damage or deterioration attributable to a lack of routine maintenance (eg. Check and Re-torque of fastening hardware, Hydraulic fluid purities, drive train alignments, and clutch operation)
3. If parts not made or supplied by Degelman have been used in the connection with the unit, if, in the sole judgement of Degelman such use affects its performance, safety, stability or reliability.
4. If the unit has been altered or repaired outside of an authorized Degelman dealership in a manner which, in the sole judgement of Degelman, affects its performance, safety, stability or reliability.
5. To expendable or wear items such as (eg. Harrow tines, Rock Picker and Rock Rake wear teeth and replaceable bushings and pins.) and any other items that in the company's sole judgement are a wear item.

No employee or representative of Degelman Industries LP is authorized to change this limited warranty in any way or grant any other warranty unless such change is made in writing and signed by the Degelman Service Manager.

This limited warranty is subject to any future availability of supply, which may directly affect Degelman's ability to obtain materials or manufacture replacement parts.

Degelman reserves the right to make improvements in design or changes in specifications at any time, without incurring obligations to owners of equipment previously delivered.

This limited warranty is subject to compliance by the customer to the enclosed *Retail Customer's Responsibility Under Degelman Warranty.*

© 2026 Degelman Industries LP