Degelman

OPERATOR & REFERENCE MANUAL

PRO-CAST | 28



PRO-CAST | 28

143090 v1.0

DEGELMAN INDUSTRIES LP
BOX 830-272 INDUSTRIAL DRIVE,
REGINA, SK, CANADA, S4P 3B1
FAX 306.543.2140 PH 306.543.4447
1.800.667.3545 DEGELMAN.COM

PRO-CAST 28

PRECISION GRANULAR APPLICATOR

PRO-CAST | 28

CONGRATULATIONS on your choice of a Degelman Pro-Cast applicator system to complement your farming operation. It has been designed and manufactured specifically for select models of Degelman Pro-Till High Performance Discs and Strawmaster series of heavy harrows for precision application of granular seed or herbicide products. Use this manual as your first source of information about this machine.

TO THE NEW OPERATOR OR OWNER - Safe, efficient and trouble free operation of your Degelman Pro-Cast requires that you and anyone else who will be operating or maintaining it, read and understand the Safety, Operation, Maintenance and Troubleshooting information contained within this manual.

By following the operating instructions in conjunction with a good maintenance program your machine will provide many years of trouble-free service. Keep this manual handy for frequent reference and to pass on to new operators or owners. Call your Degelman Dealer if you need assistance, information, or additional copies of the manual.

Note: This particular manual references the original APV product manual for the majority of operational and product information. A separate document for infomation on installation, mounting, and distribution is provided for the specific Degelman product you purchased. For Service and Warranty information, refer to the end of this document for more details.

Operating manual
PS 800 M1, PS 800 M1 D, HG 450 M1

Please read carefully before initial operation!

ORIGINAL OPERATING MANUAL

www.apv.at

Contents

CE conformity **4**

1 Identification of the implement **5**

2 Service **5**

3 Warranty **6**

4 Accident prevention safety instructions **6**

4.1 Intended use 6

4.2 General safety-related instructions and accident prevention regulations 6

4.3 Mounted implements 8

4.4 Maintenance 8

5 Safetysigns **9**

6 Technical data **13**

7 Mounting the PS **14**

7.1 Layout and mode of operation 14

7.2 Mounting on an implement 14

7.3 Installation of custom mounting / distribution kits 15

7.4 Hose connection on the fertiliser PS and with 32 outlets 16

7.5 Attachment of the control box 17

7.6 Electrical connections 18

8 Hydraulic fan drive **18**

8.1 Connecting the hydraulic fan (HG) 18

8.2 Setting values (HG) 20

8.3 Setting procedure (HG) 20

8.4 Scheme (HG) 22

8.5 Function of the fan pressure sensor and the hydraulic pressures switch 23

8.6 Hydraulic system (HG) 23

9 Settings **24**

9.1 Proper selection of the seeding shaft 24

9.2 Dismounting (changing) the seeding shaft 26

9.3 Bottom flap (brush adjustment) 27

9.4 Agitator PS 800 M1 28

9.5 Agitator PS 800 M1 D 29

9.5.1 Agitator shut-off 29

9.6 Swell air plate 30

9.7 Fill level sensor 31

9.8 Adjusting the hopper lid 31

9.9 Foreign body sieve (PS 800 M1 D) 32
9.10 Working widths, spread rate 32
9.11 Seeding tables 34
9.12 Calibration test / Regulation of the seed rate 39
9.13 Operation on the field 39
9.14 Emptying the hopper 40
10 Cleaning, care, maintenance, and repairs 40
10.1 General 40
10.2 Cleaning the seed drill 41
10.3 Repairs and service 41
11 Decommissioning, storage and disposal 41
11.1 Decommissioning the implement 41
11.2 Storage of the implement 41
11.3 Disposal 41
12 Connection diagram PS MX3 #04 42
13 Accessories 43
14 Index 46

CE conformity

In compliance with Directive 2006/42 EC

The manufacturer APV-Technische Produkte GmbH, Dallein 15, AT-3753 Hötzelsdorf, hereby declares that the product

Pneumatic seeder
"PS 800 M1", "PS 800 M1 D"
"HG 450 M1"

Implement type designation / serial no. (see handover declaration and title page)

to which this declaration of conformity refers, complies with the relevant basic safety and health requirements of EC Directive 2006/42 EC as well as the requirements of other relevant EC Directives

2006/42/EC Machinery Directive
2014/30/EU EMC Directive
2014/35/EU Low Voltage Directive

If applicable: Title / Number / Current version of the other EC Directives

For proper implementation of the safety and health requirements mentioned in the EC Directives, the following standards and / or technical specifications were taken into account:

EN 12100/1; EN 1200100/2
EN 14018 Agricultural and forestry machinery – Seed drills – Safety
EN 349 Safety of machinery – Minimum gaps to avoid crushing of parts of the human body
EN 60204-1 Safety of machinery – Electrical equipment
EN 953 Safety of machinery – Guards
ISO 12100 Safety of machinery – General principles for design – Risk assessment and risk reduction
ISO 13857 Safety of machinery – Safety distances

If applicable: Title / Number / Current version

Your CE contact person at APV is Mr. Jürgen Schöls.
He can be reached at the telephone number +43(0) 2913-8001.



Dallein, 08/2019
City, Date

Signature

Ing. Jürgen Schöls
Management

1 Identification of the implement

Clear identification

The spreader can be clearly identified by the following information on the type plate:

- Description
- Model
- Production number

Position of the type plate

The type plate is located on the steel rack, on the right side above the safety bar.

Figure with the type plate

The image shows the layout of the type plate:



Figure 1

The data on the type plate have the following meaning:

No.	Meaning
1	Description
2	Model
3	Production number
4	Weight
5	Year of manufacture

2 Service

Please contact our service address in the following cases:

- If you still have questions regarding the handling of the spreader despite the information provided in this operating manual
- For spare parts orders
- To order maintenance and repair work

APV - Technische Produkte GmbH
HEADQUARTERS
Dallein 15
A-3753 Hötzelsdorf
AUSTRIA

Telephone: +43 (0) 2913 8001
Fax: +43 (0) 2913 8002
Email: service@apv.at
Web: www.apv.at

3 Warranty

Please check the implement for any transport damage immediately upon receipt. Later claims regarding transport damage can no longer be considered.
We provide a **one-year factory warranty** starting on the date of delivery (your invoice or the delivery slip serve as a warranty certificate).
This warranty is applicable for cases of material or construction faults and does not include parts that are damaged by normal or excessive wear.

The warranty expires
- if damage is caused by external forces.
- in cases of operating errors.
- if the prescribed requirements are not met.
- if the implement is modified, expanded or equipped with third-party spare parts without our permission.
- if the implement is cleaned with water.
- if the spreader is used for snow and ice removal.

4 Accident prevention safety instructions

This chapter contains general rules of conduct for the intended use of the implement and safety-related information that should always be observed for your personal safety.

The general accident prevention regulations of the respective countries must be observed.
Check the hazard area before starting up and operating the implement! (Children!) Ensure sufficient visibility!
The warning and information stickers applied to the implement provide important instructions for safe operation: observe them for the sake of your own safety!
Before starting work, you should get to know all of the equipment and operating elements as well as their functions.

4.1 Intended use

The implement is designed solely for normal use in agricultural operations (intended use).
Any other use is considered to be non-intended. The manufacturer is not liable for any resulting damage, the operator alone bears the associated risk.
Intended use also includes compliance with the conditions for operation, maintenance, and repairs prescribed by the manufacturer.
The implement may only be used, maintained and repaired by persons who have relevant experience and were instructed on the risks. The safety instructions must also be handed over to other users.
The applicable accident prevention regulations as well as the other generally safety-related, occupational health and road traffic regulations must also be observed.
The manufacturer is not liable for any damage resulting from unauthorised modifications and the use of components and auxiliary parts.

4.2 General safety-related instructions and accident prevention regulations

- Before operating the implement and the tractor, always check for traffic and operational safety (like fractures, cracks, chafe marks, leaks, loose bolts and connections, vibrations and unusual sounds).
- Observe the generally applicable safety and accident prevention regulations!
- Use additional lighting (e.g., flashlight) for repair or maintenance work!
- The warning and information signs applied to the implement provide important instructions for safe operation, observe them for the sake of your own safety!
- Observe the respective regulations when using public roads!

- Before starting work, get to know all of the equipment and operating elements as well as their functions. It is too late to do so during operation!
- The spread rate may only be adjusted exactly according to the operating instructions and by trained personnel!
- The user should wear close-fitting clothing. Avoid wearing loose clothes!
- Please always wear safety shoes with non-slip soles!
- To reduce the risk of fire, keep the machines clean. It is also recommended to carry a fire extinguisher on the tractor.
- The implement should be cleaned regularly with compressed air!
- Check the surrounding area before starting up and operating the implement! (Children!) Ensure sufficient visibility!
- It is not allowed to carry passengers on the implement during operation and transport!
- The implement must be coupled according to the instructions and only onto the specified devices!
- Special care must be taken when coupling and uncoupling implement to and from the tractor! Use only self-locking attachments (nuts) as well as high-tensile bolts.
- Check the stability of the tractor and the implement when mounting, operating, and performing maintenance/filling. Depending on the soil tillage implement, on which the seeder is mounted, use a step according to EN 14018 and according to the operating manual.
- When mounting the implement, the hydraulic connections to the tractor hydraulic system must be connected carefully according to the operating manual.
- Always attach ballast weights at the intended attachment points according to the specifications!
- Observe the permissible axle load, total weight and transport dimensions!
- Transport equipment, e.g. lighting, warning signs and any protective equipment, must be checked and mounted!
- Triggers for fast couplers must be hanging loosely and must not trigger themselves when lowered.
- Never leave the driver's platform while driving!
- The driving behaviour, steering and braking capacity are also affected by mounted or towed implements and ballast weights. For this reason, always ensure sufficient steering and braking capacity!
- When driving in curves, take account of the wide radius and/or the centrifugal mass of the implement!
- The implement may only be operated when all of the protective devices are installed and in safety position!
- It is forbidden to stand in the working area of the implement!
- Do not stand near rotating and swivelling parts of the implement!
- Hydraulic folding frames may only be actuated when nobody is standing in the swivelling range.
- There are pinch and shear points on externally powered (e.g. hydraulic) parts!
- On implements with manual folding, always ensure that the implement is stable!
- For implements that are driven rapidly with soil-driven tools: Danger after lifting due to the still rotating centrifugal mass! Only approach the implement when it has come to a standstill!
- Before exiting the tractor, lower the implement onto the ground, switch off the motor and remove the ignition key!
- Standing between the tractor and the implement is forbidden unless the vehicle is secured against rolling away using the parking brake and/or with wheel chocks!
- Folded frames and lifting devices must be locked in transport position!
- Packer catch arms must be swivelled in and locked before road transport!
- Lock the track markers in transport position!
- When filling the hopper with slug pellets or similar toxic agents, only fill as much as is needed in the near future. Protective clothing, safety gloves, and face and eye protection must be worn during the filling procedure.
- Observe the warning information provided by the manufacturer on the packaging. The seed grains used in your spreader can be toxic!
- Always keep hands, clothing etc. away from rotating parts!
- Keep your distance when the implement is switched on!
- Never look into the spreading cone!

- Product remains should be returned to the original packaging. Residues must not be released into the environment.
- Authorised crop protection products are not known to have negative effects on the materials of the implement.
- Maintenance, repair, and cleaning work as well as the elimination of malfunctions should always be performed when the drive is switched off and the motor is at a standstill!
- When mounting the spreading device, the operator must connect it to the tractor or vehicle with a metal connection and if necessary, a grounding cable.
- Never look into the radar sensor!
- The operating manual calls for the use of CE-marked exchangeable universal joint shafts as well as their covers!
- Some parts have stickers warning about high temperatures. When working on these parts when they are hot, safety gloves must be worn. Dust deposits on the hydraulic motor must be prevented. Clean.
- The implement has the following maximum noise emission values:
  - Emission sound pressure level L_{PA}= max. 103 dB
  - Sound power level L_{WA}= max. 109 dB

  Based on EN ISO 3746:2005
  The measurement uncertainty is approx. +/- 2 dB
- Hearing protection must be worn when using the implement.
- If possible, the selected fan speed should not be too high.

4.3 Mounted implements

- Before mounting and dismounting implements on the three-point linkage, move the operating devices into the position that excludes unintentional lifting or lowering!
- For three-point mounting, the mounting categories of the tractor and the implement must match or be adapted!
- There is a risk of injury due to crushing and shearing points in the area of the three-point linkage!
- Do not stand between the tractor and the implement when actuating the external controls for the three-point mounting!
- When the implement is in transport position, always ensure that the tractor three-point linkage is sufficiently locked to the sides!
- When driving on roads with the implement lifted, the operating lever must be locked against lowering!

4.4 Maintenance

- Maintenance, repair, and cleaning work as well as the elimination of malfunctions should always be performed when the drive is switched off and the motor is at a standstill! – Remove the ignition key! – Switch off the implement!
- Check the nuts and bolts regularly for tight fit and retighten if necessary!
- When performing maintenance on the lifted implement, always ensure safety through suitable support elements!
- When changing work tools with sharp edges, always use suitable tools and gloves!
- Properly dispose of oils, grease and filters!
- Always cut the power supply when working on the electrical system!
- When performing electrical welding work on the tractor and mounted implement, disconnect the cable on the generator and the battery!
- Spare parts must at least comply with the technical requirements specified by the implement manufacturer! This is ensured with original parts!
- Do not clean the implement with water. It is recommended to clean the implement with compressed air.

5 Safetysigns

Observe these stickers on the implement! They inform you of special dangers!



Read and observe the operating manual before operating the implement!



Operating errors can lead to serious injuries!

Read and observe the operating instructions before operating the implement!



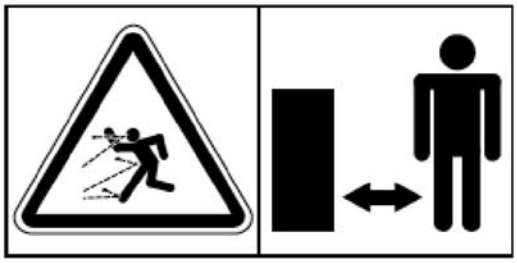

Danger due to thrown parts; observe the safety distance!

Do not stand on the implement while driving!



Always switch off the engine and remove the key before maintenance work!



Never reach into the crushing danger zone as long as the parts could still move!



Do not stand between the machines when connecting and actuating the hydraulic system!



Do not climb onto rotating parts, use the intended access ladders!



Be careful with escaping high-pressure liquids!
Observe the instructions in the operating manual!





Be careful with escaping high-pressure liquids!
Observe the instructions in the operating manual!



Danger due to thrown parts; observe the safety distance!

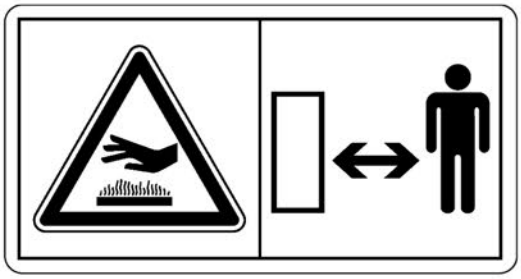

Maintain a safe distance from hot surfaces!

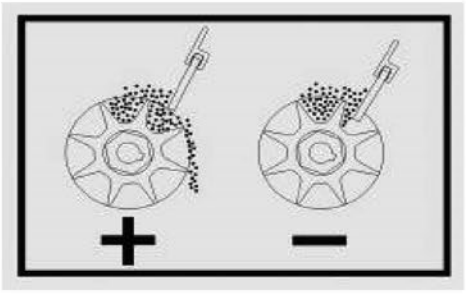

Brush adjustment (function/mode of operation)!

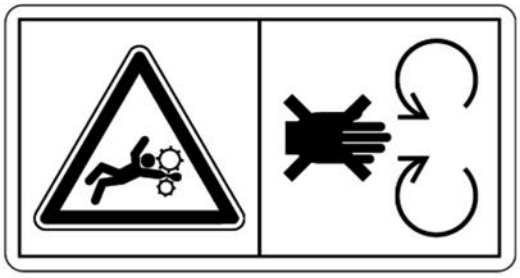

Maintain a safe distance from rotating implement parts!

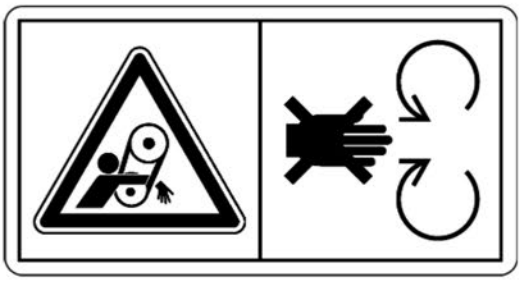

Never open or remove safety guards when the engine is running!



Use hearing protection!



Use hearing protection!



Hot surface!
Do not touch!



Risk of injury due to moving parts.
Switch off the implement and disconnect the power supply when handling!



Risk of injury due to rotating parts. Only work with mounted covers!



Only operate the implement when the cover is installed!



Do not reach into rotating parts.
Switch off the implement and disconnect the power supply when handling!

6 Technical data

Designation:	**PS 800 M1 / PS 800 M1 D**
Hopper content:	839 litres
Dimensions (W x H x D):	1050 x 1270 x 1700 mm
Weight:	250 kg
Max. spreading width:	12 m
Power supply:	12 V, 25 A

Hydraulic supply with HG

Max. pressure:	150 bar
Max. oil quantity:	38 l/min
Weight:	40 kg
Length of the hydraulic hoses:	Tank line 6 m Supply line for the motor 6 m Pressure line 0.75 m Return line 0.75 m
Dimensions (L x W x H):	760 x 660 x 270 mm

Hole pattern for the installation holes on the PS 800 M1 / PS 800 M1 D:

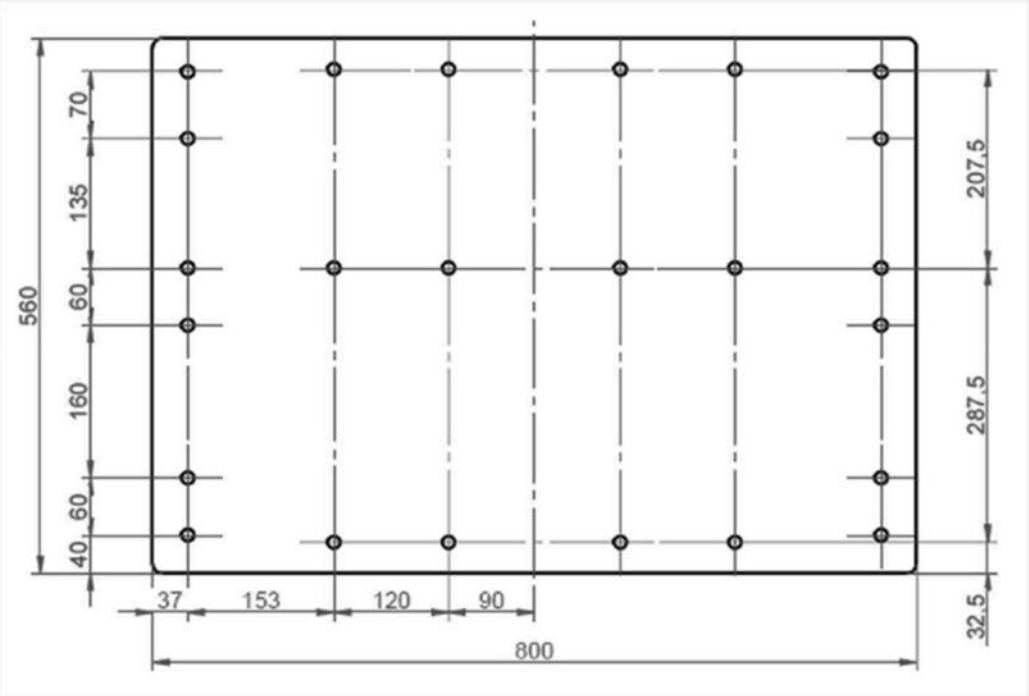

Figure 2: dimensions *Units in mm*

The contact area must have a minimum dimension of 560 x 800 mm!

7 Mounting the PS

7.1 Layout and mode of operation

The pneumatic seeder "PS 800 M1" / "PS 800 M1 D" is a spreading and seeding implement with a total capacity of 800 litres.
The seeding shaft is driven by a 12 V electric gear motor, which is regulated by the control box. The speed of the seeding shaft can be comfortably regulated from the driver's seat using the control box. Here, there is the option of using speed sensors (see operating instructions for the control box) to regulate the speed of the seeding shaft according to the ground speed.
Power can be supplied to the control box either through the 3-pin standard socket or directly from the battery.

The fan is driven by a hydraulic motor, which is controlled via a valve. This can be used to adjust the speed of the fan impeller and therefore the working width and the required air volume for various seed types. The implement also has a pressure sensor in the air flow and a fill level sensor for monitoring.

The coating of the PS 800 D is applied using CDC coating, as it is also used in the automobile industry. This means that all of the coloured parts, except for the hydraulic fan, are CDP-coated. Another difference is that the parts that are galvanised on the PS 800 are made of stainless steel on the Fertiliser Edition.

7.2 Mounting on an implement

To mount the PS 800 M1 on a mounted implement, you must ensure that the intended carrier or the structure is able to support **a load of at least one ton** without suffering damage! If this is not given, both devices can be damaged!

The contact area must have a minimum dimension of 560 x 800 mm!



Figure 3

7.3 Installation of custom mounting / distribution kits

Mounting and distribution kits can be custom designed for use with a variety of products. The distribution and mounting components will vary from product to product. Refer to the mounting/ installation guide provided by the manufacturer for your specific product.

7.4 Hose connection on the fertiliser PS and with 32 outlets

On the fertiliser version of the PS, the hoses must be connected as follows:

- Slightly loosen the locking bolts (not completely!).
- Apply a little brake cleaner onto the hoses (only on the outside!) to make it easier to push them through the fertiliser seal.
- The hoses must be completely pushed in (until you feel the stop) so that the seed can flow smoothly (without impacts).

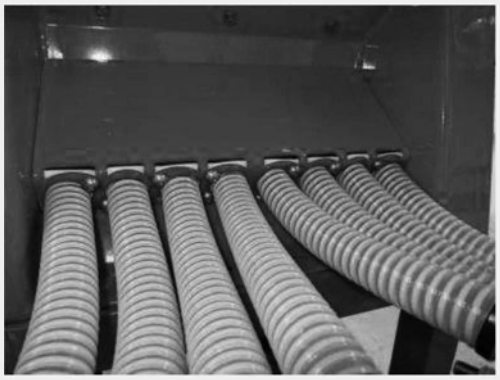

Figure 10



Figure 9

TIP!
To achieve better lateral distribution, connect the longest hoses to the gearbox motor side.

7.5 Attachment of the control box



Figure 11

12-pin plug
6-pin plug
3-pin plug
30 A fuse

Fasten the standard supplied bracket with two bolts in the tractor cab.

CAUTION!
If possible, do NOT roll up the cable into a coil!

On the bottom side of the control module, there is a 3-pin plug (= connection to the steady plus on the tractor), a 6-pin plug (= connection of the seeder with the control box) and a 12-pin plug for the sensors (e.g.: ground wheel or cable for 7-pin standard socket, etc.).
Upon customer request, these are available as accessories for the PS 800 M1 / PS 800 M1 D seeder!
A 30 A fuse is located on the right side of the control box.

TIP!
Pay attention to the angle at which you look at the control box to be able to read the display optimally. If necessary, bend the bracket slightly to adjust the angle as required.

7.6 Electrical connections

The standard supplied cable can be directly connected to the 3-pin standard socket of the tractor in the cab. The other end is connected to the control box.

The fuse (30 A) is located on the right side of the control box.



Figure 12

TIP!
If your tractor does not have a standard socket, it can be retrofitted with the Complete cable set for power socket, tractor retrofit (item no. 00410-2-022) (accessory).

CAUTION!
The 12 volt power supply must NOT be connected to the socket for the cigarette lighter! After use of the implement, the control box should be disconnected again (for various safety-related reasons). If your battery is charged by a charger that is in "Start" operating mode, there can be voltage peaks! These can cause damage to the electrical system of the control box if it is also connected when the battery is being charged!

8 Hydraulic fan drive

8.1 Connecting the hydraulic fan (HG)

For the PS 800 M1 /PS 800 M1 D, the hydraulic fan is driven directly by the tractor hydraulic system.

Two hoses are intended for coupling to the tractor:

- The return line (marked in yellow, BG4) must flow into the tractor oil tank unpressurised (WITHOUT reduction)!!!
- The pressure line (marked in red, BG3) can be simply connected to the tractor control unit.
- When connecting the hydraulic hoses to the tractor hydraulic system, make sure that the hydraulic system on the tractor and implement side is unpressurised!



Figure 13

CAUTION!
Before you start up the fan, completely close the flow control valve! This prevents the fan from over-revving unintentionally!

The BG4 coupling plug for the tank line on hydraulic seeders is dismounted and included with the accessories. Please observe the operating instructions for your tractor to make sure that you use the correct connection.
The tank line is closed with a plastic cap so that no oil can leak during transport, it must be removed before initial operation and replaced by the proper BG4 coupling.

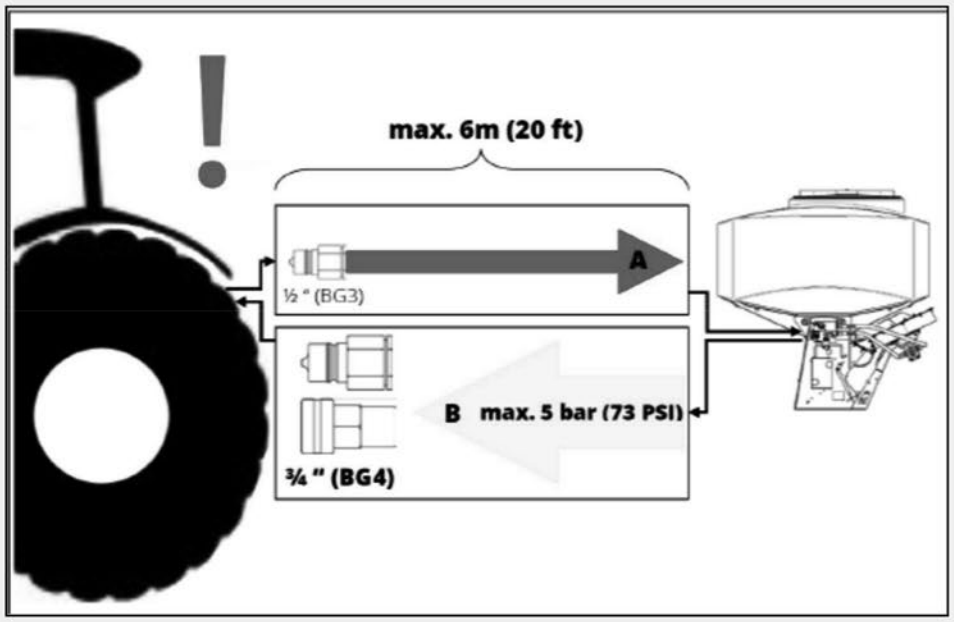

Figure 14

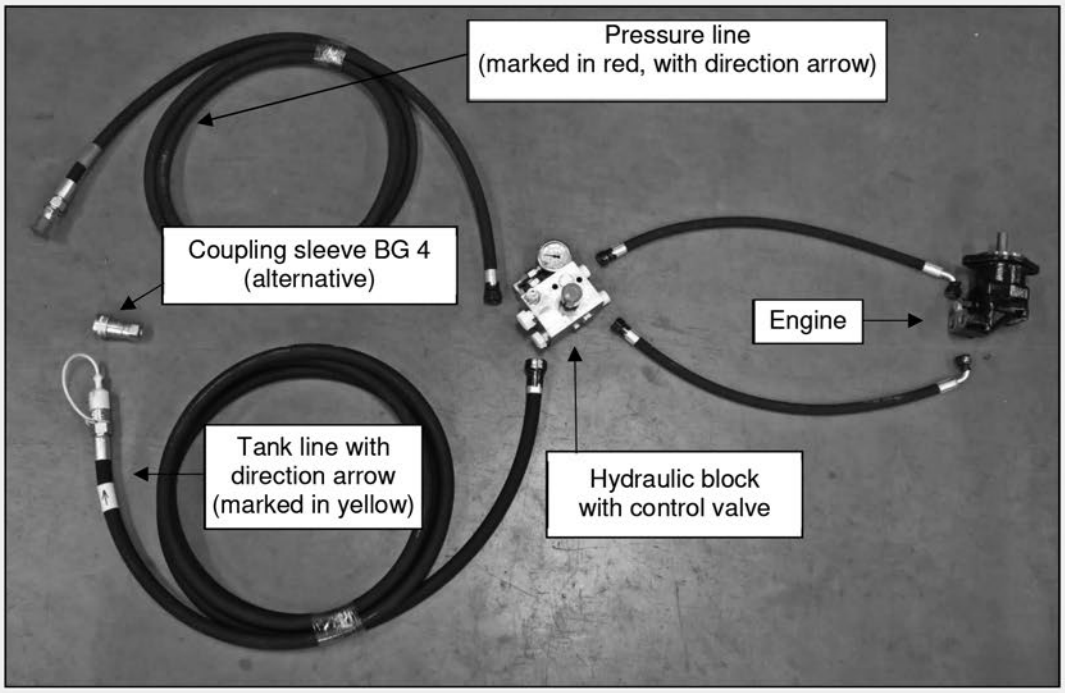

Figure 15

8.2 Setting values (HG)

The fan produces an air current that carries the seed through the hoses to the dispersion plates. The required air pressure and air quantity depend strongly on the seed (type and weight), the spread rate, working width and speed.
For this reason, it is not possible to give precise specifications for the correct fan settings, it must be determined in field trials!
A reference value can be found under Chapter 8.3 Setting procedure (HG).



Figure 16

CAUTION!
The air flow must not be too low under any circumstances, otherwise the seed can get stuck and clog the hoses! This results in a lot of work, since the hoses must then be disconnected and emptied manually. In addition, the seed might be ground in the metering unit!
An excessive air flow can also have negative impacts on the seed distribution.
Guiding principle: As much air as required, but as little air as possible!

The air quantity is limited by the utilised spreading material, which must not be damaged when hitting the spreading plate and must also not bounce off too high in order to achieve the desired placement!

The fan speed increases proportionally with the oil flow.

8.3 Setting procedure (HG)

Version 1 (fixed displacement pump – non-adjustable oil quantity)

- Completely turn in the control valve (- minus)
- Start up the fan (tractor engine speed as in field operation)
- Adjust the fan speed using the control valve on the control block
- The control block protects the motor against overspeed

TIP!
The hydraulic pump on the tractor must supply sufficient oil so that the fan speed does not drop when the tractor motor speed drops or when other hydraulic functions are actuated.

Version 2 (variable displacement pump or oil quantity adjustable on the tractor)

- Completely turn out the control valve (+ plus)
- Close the flow control valve on the tractor (set the oil quantity to **ZERO**)
- Start up the fan and run up to the desired fan speed (slowly increase the oil quantity)

TIP!
The control block is designed for 80 l/min – The system can overheat if the tractor pump produces a larger quantity of oil as well as when the tractor is not equipped with oil cooling.

CAUTION!
The setting is only valid for the tractor used. If a different tractor is connected, the fan must be readjusted!
Correct adjustment is essential to prevent possible seeding errors when the speed is too slow or damage to the fan when the speed is too fast!

Setting table for the control valve:
(valid for approx. 50°C oil temperature)

		Working width					
		3 m		6 m		12 m	
Seed	Quantity	Pressure	Speed	Pressure	Speed	Pressure	Speed
Fine seed	5 kg/ha	5 bar	1400 rpm	8 bar	1550 rpm	10 bar	1650 rpm
Fine seed	30 kg/ha	15 bar	2900 rpm	20 bar	3300 rpm	35 bar	4000 rpm
Coarse seed	50 kg/ha	18 bar	3000 rpm	21 bar	3400 rpm	39 bar	4200 rpm
Coarse seed	100 kg/ha	19 bar	3100 rpm	22 bar	3500 rpm	41 bar	4300 rpm

These pressure specifications apply for the manometer attached on the control block.

TIP!
A measuring strip is applied on the hydraulic motor. If the temperature increases in a range of the scale (from 71 °C to 110 °C), the strip is coloured black.

CAUTION!
Temperatures above 80 °C are not permitted!

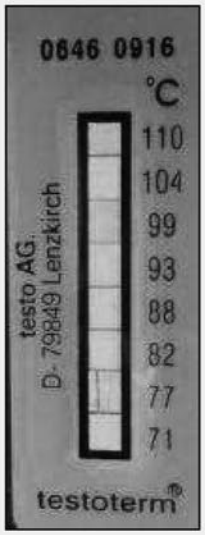

Figure 17

8.4 Scheme (HG)

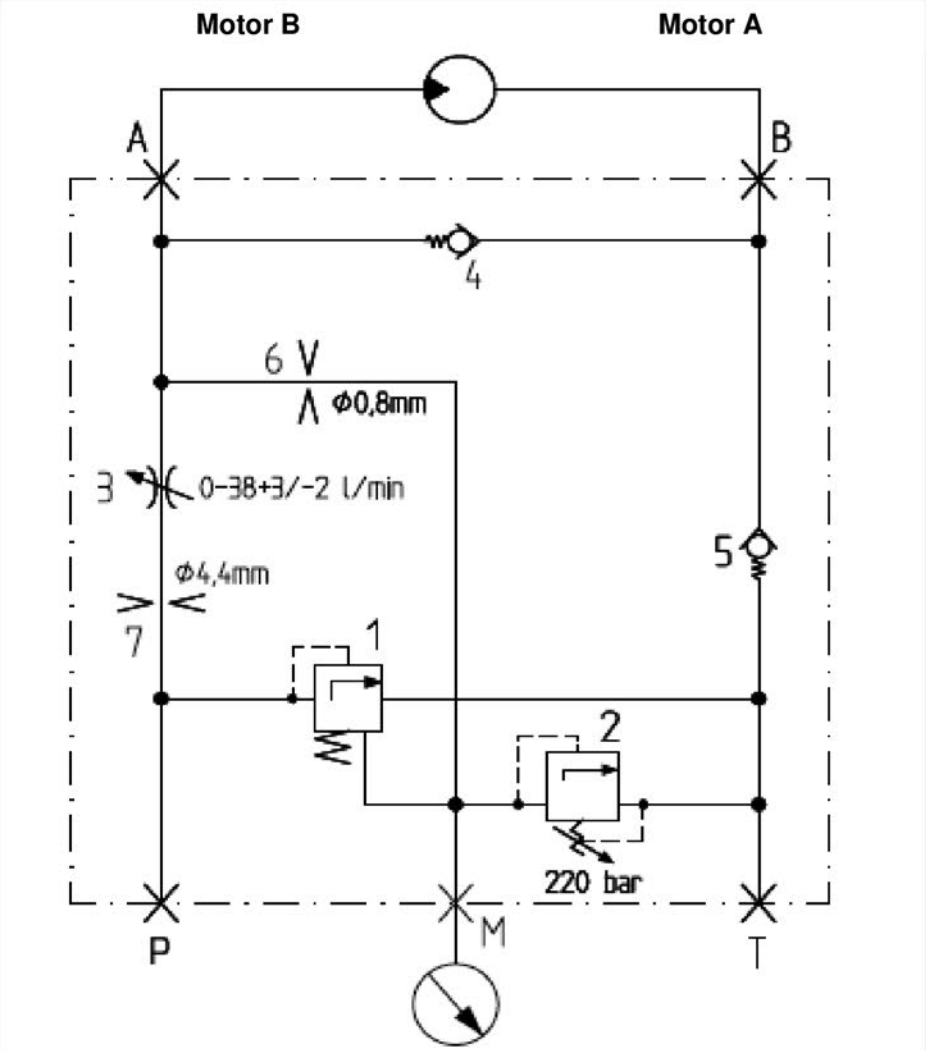

Pos.	Description
A	G ½" (bolted connection XGE 15 LR-ED) Hose length max. 1 m, motor-side connection B
B	G ½" (bolted connection XGE 15 LR-ED) Hose length max. 1 m, motor-side connection A
P	G ½" (bolted connection XGE 18 LR-ED) Max. hose length 6 m Coupling connector BG3, marked in red Max. flow rate 38 l/min, max. pressure 220 bar
T	G ¾" (bolted connection XGE 22 LR-ED) Max. hose length 6 m, coupling connector or coupling sleeve BG4, marked in yellow

CAUTION!
When changing the motor, it must be ensured that connection A from the control block is connected to connection B of the motor and connection A from the motor to connection B on the block.

8.5 Function of the fan pressure sensor and the hydraulic pressures switch

The **fan pressure sensor** (Figure 19) prevents the seeding shaft from being switched on as long as the hydraulic fan is not yet switched on, and thus prevents clogging of the seed drill through undesired or premature switch-on.

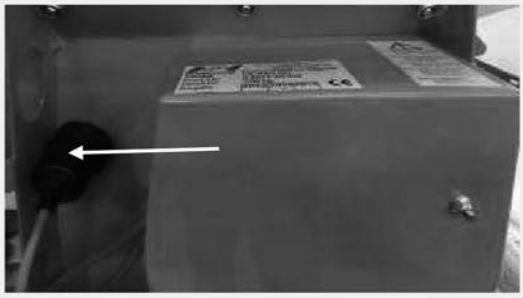

Figure 19

The **hydraulic pressure switch** (Figure 20) signals on the control box if too much pressure (10 bar) is being applied in the tank line of the hydraulic motor. This can destroy the seal.

As soon as one of the two sensors report an error, the message "Fan error" appears on the screen of the control box.

If the fan is not running yet, start it up and then the error message should disappear and you can start the seeding shaft. If the fan is already running, there is probably too much pressure in the tank line of the motor. The causes on the tractor could be a clogged oil filter or a tank line to the coupling that is too small.

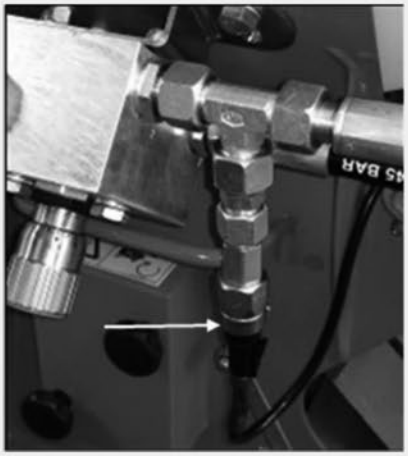

Figure 20

CAUTION!
It is imperative to reduce the pressure, otherwise the motor can be destroyed!

8.6 Hydraulic system (HG)

CAUTION!
The hydraulic system is under high pressure!
If the connections are interchanged, there will be an inverse function and/or certain destruction of the hydraulic motor! Danger of accident!

- When connecting hydraulic motors, the specified connection of the hydraulic hoses must be observed!
- When connecting the hydraulic hoses to the tractor hydraulic system, make sure that the hydraulic system on the tractor and implement side is unpressurised!
  For hydraulic function connections between the tractor and the implement, coupling sleeves and connectors should be marked to rule out operating errors!
- Inspect the hydraulic hose lines at regular intervals and replace in case of damage or wear! The replacement lines must comply with the technical requirements of the implement manufacturer!
- Due to the risk of injury, use suitable tools when searching for leaks!
- Liquids escaping under high pressure (hydraulic oil) can penetrate skin and cause serious injuries! Consult a doctor immediately in case of injury! (Risk of infection!)

PLEASE NOTE!
Before working on the hydraulic system, park the implement, depressurize the system and switch off the motor!

9 Settings

9.1 Proper selection of the seeding shaft

Before filling the hopper with seed, it is important to select the proper seeding shaft (coarse / fine / blind). The selection is based on the properties of the seed and the rate to be spread.

Seeding shaft types			
Standard equipment		**D series standard equipment**	
			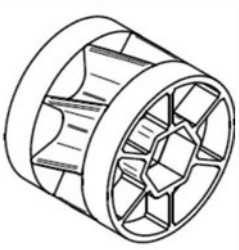
The fine blind fb-f-fb-fb	The coarse GGG	The fine blind fb-f-fb-fb	Die Flex 20 fb-Flex20-fb
White mustard Phacelia	Grass Cereals	Granulated fertiliser, white mustard, phacelia	Granulated fertiliser Peas, beans

Seeding shaft types: Available as an option			
		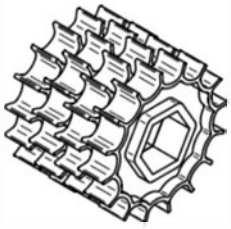	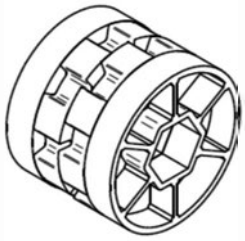
The extra fine fb-fb-ef-eb-fb	The extra fine full fb-efv-efv-fb	The fine ffff	The fine full fb-fv-fv-fb
Poppy	Canola	Buckwheat White mustard, cress	Clover Cress
Seeding shaft types: Available as an option			
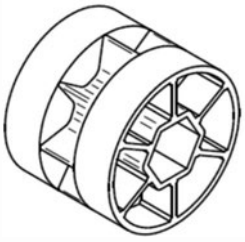	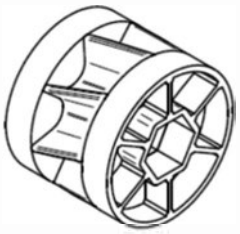	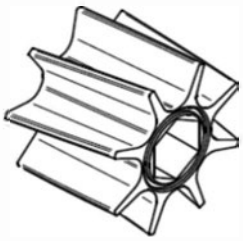	
The coarse blind GB-G-GB	The Flex 20 Fb-Flex20-fb	The Flex 40 Flex40	
Buckwheat Fodder radish	**Seed mixtures** Peas, beans, lupines, vetch, fertiliser		

2 completely mounted seeding shafts are included in the standard scope of delivery for the PS 800 M1:

1 seeding shaft with coarse-toothed seed wheels (G-G-G) (Figure 21)
1 seeding shaft with one fine seed wheel per outlet (fb-f-fb-fb) (Figure 22)

The standard scope of delivery for the PS 800 M1 D includes 2 completely mounted seeding shafts:

1 Flex20 seeding shaft (Figure 23)
1 seeding shaft with one fine seed wheel per outlet (fb-f-fb-fb) (Figure 22)

Scope of use for the coarse-toothed seeding shaft
Generally for high rates or large grain sizes.
E.g.: Grass mixtures, rye, barley, wheat, oats, etc.

Scope of use for the fine-toothed seeding shaft
Generally for low rates or small grain sizes.
Small seeds such as clover, phacelia, slug pellets, etc.

Scope of use for the Flex20 and the Flex40 seed wheels:
Generally for granulated fertiliser, high rates or large grain sizes.
Since these seed wheels are flexible, damage to the seed wheels can be avoided.
E.g.: grass mixtures, rye, barley, wheat, oats, fertiliser as well as for large seeds such as peas, horse gram, vetch, etc., see also under Point 9.11



Figure 21



Figure 22



Figure 23

CAUTION!
For wheat or seed types with grains of similar size or larger, the hoses can be shifted at high spread rates. This can lead to consequential damages such as more rapid wear of the seeding shaft!
To prevent such damage to the implement, we recommend increasing the air quantity to the maximum level!

TIP!
The spread rate can still be significantly reduced by using blind or extra-fine seed wheels.

CAUTION!
It is important to select the combination of seed wheels such that the seeding shaft settings on the control box are ideally between 20 % and 80 %.
This ensures good regulation and homogeneous delivery of the seed even with ground speed related spreading at very low or high speeds!

9.2 Dismounting (changing) the seeding shaft

PLEASE NOTE!
When changing the seeding shaft, ensure that the hopper is completely empty.
After installing the seeding shaft, check the implement for smooth running.

To dismount the seeding shaft, proceed as follows:

- Refer to the seeding table and select the desired seeding shaft with the corresponding spread rate.
- Empty the hopper completely.
- Unscrew the locking nuts from the side cover plate for the seeding shaft (Figure 24 and Figure 25).
- Now remove the entire seeding shaft along with the side cover plate (Figure 26).
- The second seeding shaft is stowed in the seeding shaft holder. Here, the knurled nuts must be loosened, then the cover can be swivelled away and the second seeding shaft can be taken out (Figure 27 and Figure 28).
- Turn the spare shaft by 180° and stow in the seeding shaft holder (Figure 29).
- Now the new seeding shaft can be installed in the implement.
- Install the disassembled parts again in the reverse sequence (Figure 30).

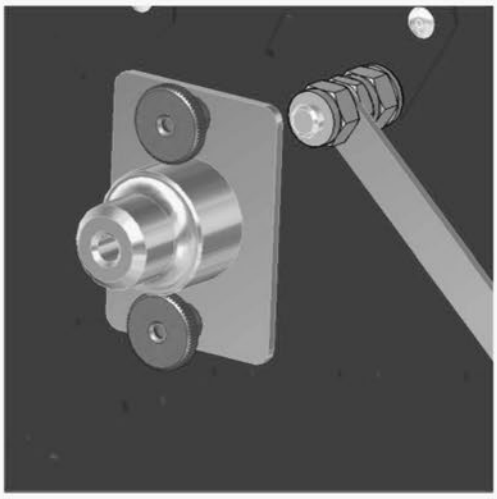

Figure 24

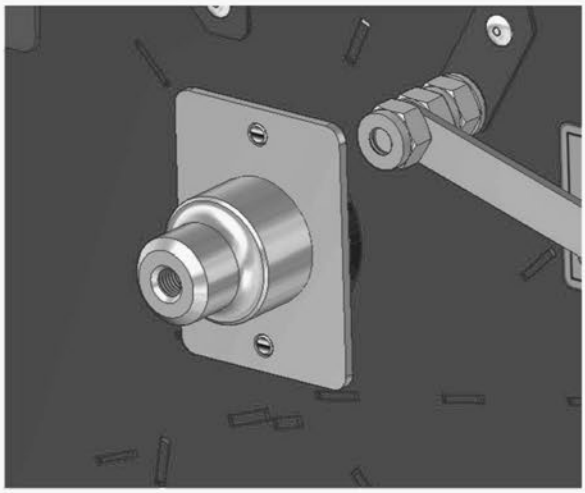

Figure 25

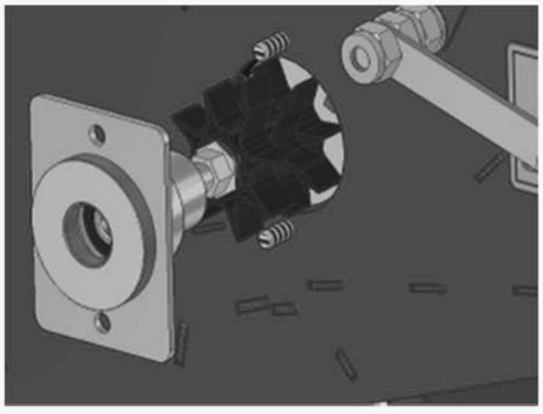

Figure 26

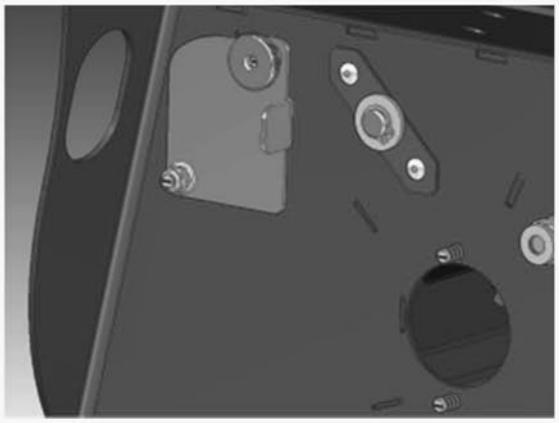

Figure 27

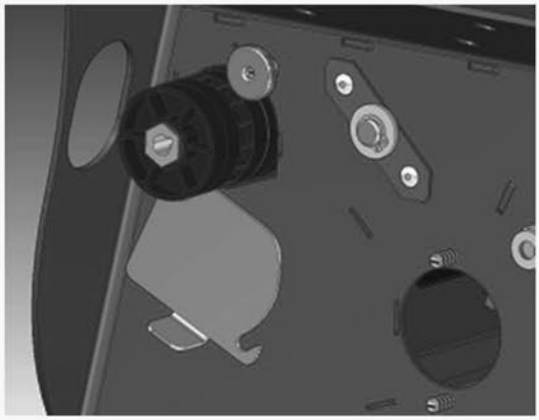

Figure 28

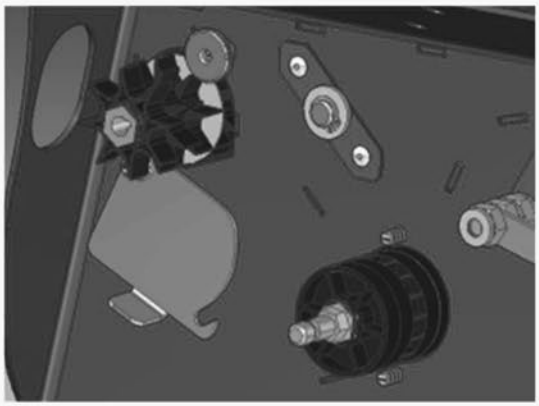

Figure 29

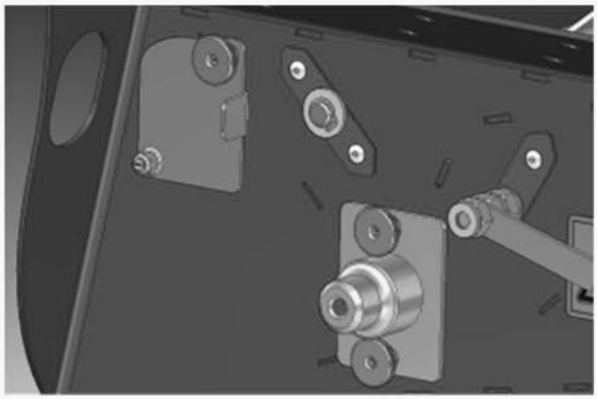

Figure 30

9.3 Bottom flap (brush adjustment)

A brush is installed over the seeding shaft. This brush can be adjusted on a scale from +4 to -5 using a lever on the frame.
When the brush is pressed more on the seeding shaft using the lever (scale value -1 to -5), the spread rate is slightly reduced. When the brush is lifted (scale value +1 to +4), the spread rate is slightly increased.
The basic setting of the bottom flap is 0. The calibration tests for the seeding tables were performed with this setting.
As a matter of principle, the brush is used to adjust the implement for the seed to be spread. For fine seed types that flow well, the brush usually has to be set more inwards, i.e. at a negative value, and for larger seeds, it must be set more outwards, i.e. at a positive value on the scale.
The brush can also be used for finer adjustments to the seed spread rate!

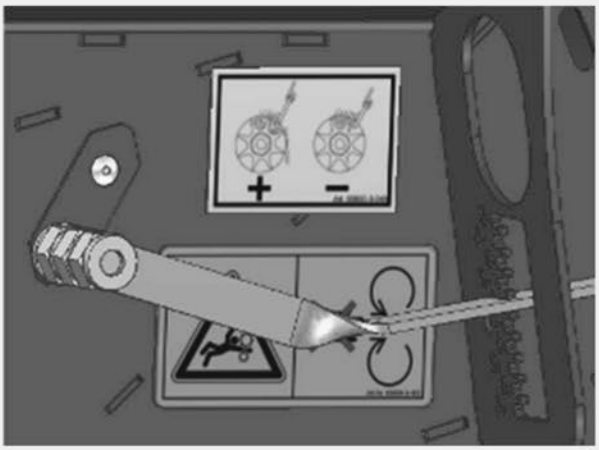

Figure 31

On the PS 800 D, the 3-row brush (see Figure 32) is installed as a standard, so that this PS can also be used to spread finer spreading materials such as micro granules.

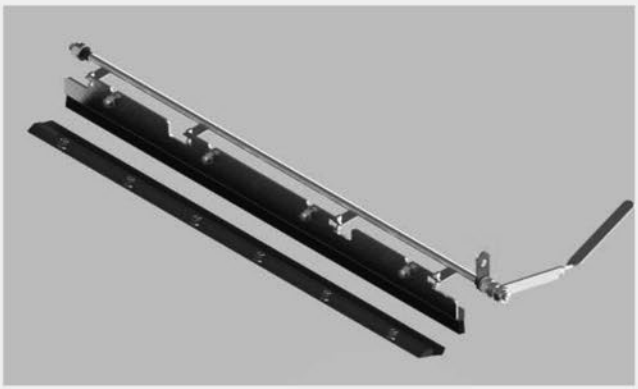

Figure 32

9.4 Agitator PS 800 M1

Use of the agitator is only required for seed types that tend towards bridging or for very light seed (e.g. for grasses).

When the agitator is not required, you only have to remove the chain that is spanned on the drive wheels between the agitator and the meter roll.

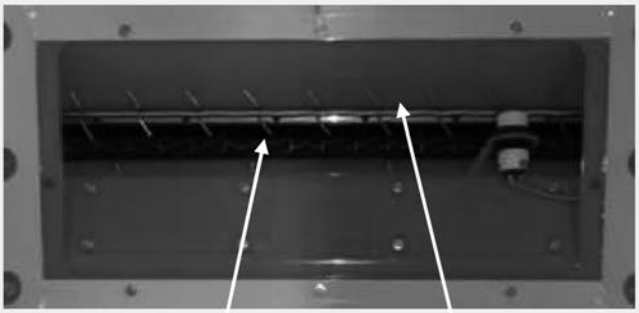

Figure 33 *Agitator* *Seeding shaft*

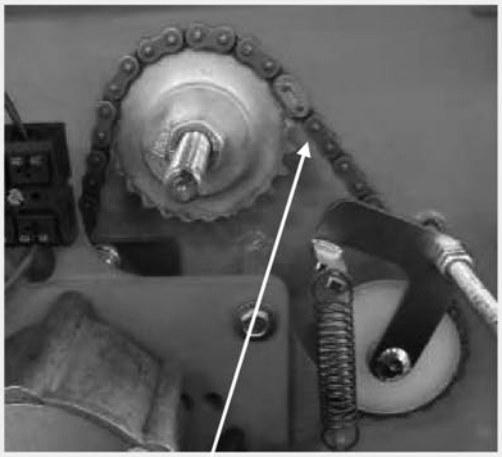

Figure 34 *Chain*

9.5 Agitator PS 800 M1 D

This agitator has crescent-shaped agitator teeth and a rake (see Figure 35). This agitator is designed for fertiliser, since it can crush fertiliser lumps with the combination of agitator teeth and the rake. Moreover, the rake can be removed e.g. for seeds that tend to form bridges, such as grass. To do so, the 4 bolts holding the rake must simply be unscrewed.

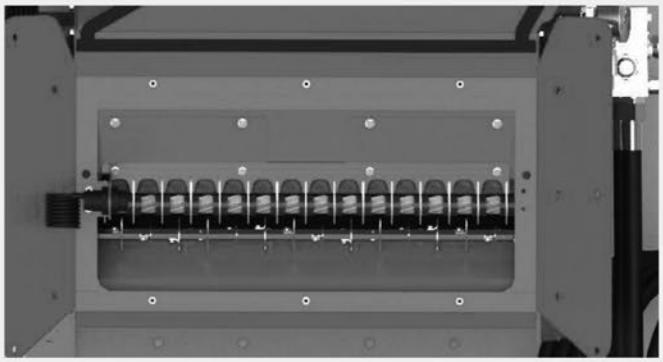

Figure 35

CAUTION!
After removing the rake, BE SURE to screw the bolts that held the rake back in and tighten them.

9.5.1 Agitator shut-off

In contrast to the PS 800, the agitator on the PS 800 D can be switched on and off without tools.

To do so, proceed as follows:

- Loosen the retaining plate for the second seeding shaft and rotate it downwards.
- Now lift up the rod that is located beside the parking position of the seeding shaft, and depending on the case, either pull it out or push it in (rod pushed in = agitator on, rod pulled out = agitator off). When actuating the rod, be sure to push it in until the notch is visible and then push the rod down for a start to allow it to engage, and then secure it again with the plate that covers the parking position.



Figure 36

9.6 Swell air plate

For larger seed types, the swell air plate must be removed to prevent damage to the seed, the seeding shaft and the steel rack.

To do so, proceed as follows:

- Remove the seeding shaft cover with the three star knob screws.

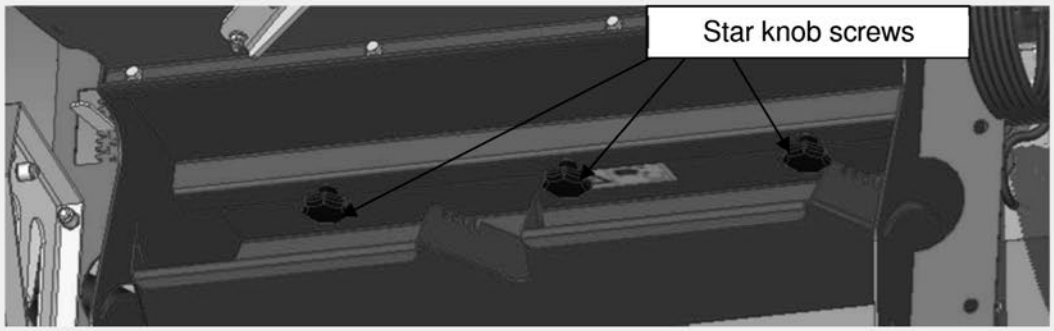

Figure 37

- Unscrew the 8 bolts for the swell air plate and remove the plate.



Figure 38

- Mount the seeding shaft cover with the three star knob screws.
  When mounting the seeding shaft cover, ensure that the cover latches into the groove so that no air escapes here.

PLEASE NOTE!
For large seed types such as vetch, peas, horse gram or similar large seeds, the swell air plate must be removed to avoid damage to the seed wheels.

TIP!
We also recommend the use of Flex seed wheels, since these are flexible and do not break (see under 9.1).

9.7 Fill level sensor

The fill level sensor reacts when it is no longer covered with seed. Its height can be adjusted depending on the desired quantity in the hopper when the sensor is triggered.
The intensity of the sensor can also be adjusted for the respective seed type. It is adjusted using the small slotted screw at the rear of the sensor.
When the sensor is switched, it lights up and the hopper is full.
You can cover the sensor at the front with your hand and it should then light up. This makes it easy to check whether the sensor works and if the intensity is correct.



Figure 39

9.8 Adjusting the hopper lid

If air escapes between the hopper and the cover, it is possible that the fastener is not adjusted correctly.

In this case, the fastener must be adjusted such that the seal that on the hopper presses against the cover again, so that on the one hand, the system is sealed and on the other, the fastener is still easy to open and close.

To adjust the fastener, you only have to loosen the lock nut (1), and then screw in the ring bolt (2) a little (see Figure 40). Then tighten the lock nut again, ensuring that the ring bolt is in the correct position. Make sure that the two fasteners are tensioned evenly, i.e., that the two ring bolts are screwed in to the same depth in the turning part of the fastener.

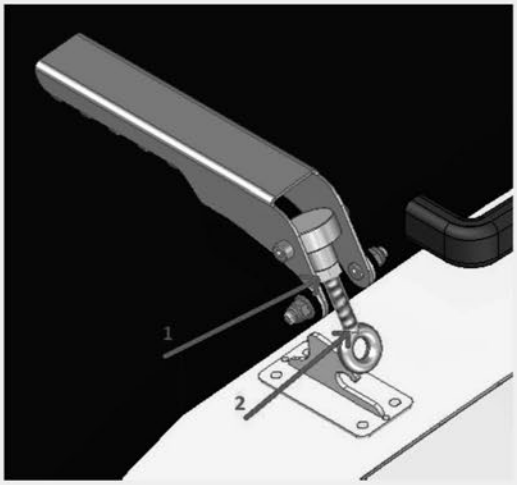

Figure 40

9.9 Foreign body sieve (PS 800 M1 D)

On the PS 800 M1 D, two foreign body sieves are installed as standard. (For the PS 800 M1, these are available as an accessory, see Chapter 13.)
These sieves serve to separate various foreign bodies as well as larger clumps of fertiliser.



Figure 41

9.10 Working widths, spread rate

The PS 800 M1 / PS 800 M1 D can be used for working widths up to max. 12 m.

CAUTION!
It must be ensured that the tractor is capable of providing enough hydraulic power for the fan. Otherwise, the hoses can be displaced towards the dispersion plates and cause damage to the implement!

The spread rate depends on the speed of the seeding shaft and the forward speed when operating with sensors. To determine the desired spread rate, you should perform a calibration test before beginning work.

The seeding tables show the spread rate for the respective seed types in kilograms per minute (= spread rate of the calibration test).

CAUTION!
The seeding tables are based on 16 outlets with the same equipment!
If you are using e.g. only 12 outlets instead of the 16 outlets, the calibrated quantity is reduced accordingly.

CAUTION!
These tables can be used as reference values but they cannot be used in the same way everywhere as many factors play a role or strong changes can occur (such as thousand grain weight, seed moisture content, changes in flow behaviour, and much more).

The spread rate is calculated with the following formula:

$$\frac{\text{desired spread rate [kg/ha] x forward speed [km/h] x working width [m]}}{600} = \text{Weight [kg/min]}$$

Example: $\frac{5 \text{ kg/ha x } 12 \text{ km/h x } 12 \text{ m}}{600} = 1.2 \text{ kg/min}$

To use imperial units (e.g. in the U.S.), use the following formula:

$$\frac{\text{Desired spread rate [lbs/acre]} \times \text{forward speed [mph]} \times \text{working width [ft]}}{495} = \text{Weight [lbs/min]}$$

Example: $\frac{30 \text{ lbs / acre} \times 10 \text{ mph} \times 20 \text{ ft}}{495} = 12.12 \text{ lbs/min}$

Multiply the values listed in the seeding table (Chapter 9.11) by a factor of 2.20462 to determine the weight in pounds per minute (1 kg = 2.20462 pounds).

9.11 Seeding tables

Gras
Grass
Herbe

Lolium perenne



Quantity	kg/min
Seeding shaft	GGG
2	0.78
5	1.57
10	2.89
15	4.22
20	5.54
25	6.86
30	8.12
35	9.37
40	10.63
45	11.88
50	13.14
55	14.27
60	15.40
65	16.53
70	17.67
75	18.80
80	20.54
85	22.27
90	24.01
95	24.22
100	29.20

Weizen
Wheat
Blé

Triticum



Quantity	kg/min	kg/min	kg/min
Seeding shaft	GGG	fb-Flex20-fb	Flex40
2	1.19	0.48	0.54
5	1.90	1.08	1.95
10	3.08	2.09	4.32
15	4.26	3.09	6.68
20	5.45	4.10	9.04
25	6.63	5.11	11.40
30	7.74	6.11	13.76
35	8.86	7.12	16.13
40	9.97	8.13	18.49
45	11.09	9.13	20.85
50	12.20	10.14	23.21
55	13.28	11.15	25.58
60	14.37	12.15	27.94
65	15.45	13.16	30.30
70	16.53	14.16	32.66
75	17.61	15.17	35.02
80	18.71	16.18	37.39
85	19.80	17.18	39.75
90	20.89	18.19	42.11
95	25.83	19.20	44.47
100	30.75	20.20	46.83

Rettich
Radish
Radis

Raphanus raphanistrum



Quantity	kg/min
Seeding shaft	GGG
2	1.89
5	3.20
10	5.36
15	7.53
20	9.70
25	11.87
30	14.24
35	16.61
40	18.98
45	21.34
50	23.71
55	25.62
60	27.53
65	29.44
70	31.36
75	33.27
80	45.68
85	58.10
90	70.52
95	74.65
100	86.59

Vetch
Vetch
Vesce

Vicia



Quantity	kg/min
Seeding shaft	fb-f-fb-fb
2	0.11
5	0.31
10	0.63
15	0.95
20	1.27
25	1.59
30	1.87
35	2.14
40	2.41
45	2.68
50	2.96
55	3.20
60	3.44
65	3.68
70	3.92
75	4.16
80	4.43
85	4.70
90	4.96
95	5.03
100	5.19

Buckwheat
Buckwheat
Blé Noir

Fagopyrum



Quantity	kg/min	kg/min	kg/min
Seeding shaft	GGG	fb-Flex20-fb	Flex40
2	1.05	0.03	0.86
5	2.33	0.05	1.26
10	4.46	0.47	2.92
15	6.59	1.16	4.57
20	8.72	1.85	6.22
25	10.85	2.54	7.88
30	13.01	3.23	9.53
35	15.18	3.92	11.18
40	17.34	4.61	12.84
45	19.50	5.30	14.49
50	21.66	5.99	16.14
55	23.69	6.68	17.80
60	25.73	7.37	19.45
65	27.76	8.06	21.10
70	29.79	8.75	22.76
75	31.83	9.44	24.41
80	33.82	10.14	26.06
85	35.82	10.83	27.72
90	37.81	11.52	29.37
95	40.09	12.21	31.02
100	48.73	12.90	32.68

Blue lupine
Blue Lupine
Lupin Bleu

Lupinus angustifolius

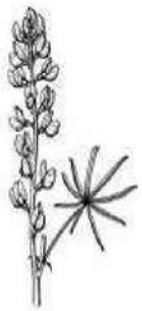

Quantity	kg/min
Seeding shaft	GGG
2	1.24
5	2.81
10	5.41
15	8.02
20	10.62
25	13.23
30	15.12
35	17.01
40	18.90
45	20.79
50	22.68
55	25.30
60	27.93
65	30.56
70	33.18
75	35.81
80	37.79
85	39.77
90	41.75
95	44.41
100	47.01

Perennial rye
Green Rye
Seigle Vert

Secale cereale



Quantity	kg/min
Seeding shaft	GGG
2	0.65
5	1.33
10	2.46
15	3.59
20	4.72
25	5.84
30	9.28
35	12.71
40	16.14
45	19.57
50	23.00
55	25.01
60	27.03
65	29.04
70	31.05
75	33.07
80	35.15
85	37.24
90	39.32
95	40.85
100	43.32

Spelt
wheat
Spelt
Épeautre

Triticum aestivum



Quantity	kg/min
Seeding shaft	GGG
2	0.15
5	0.29
10	0.54
15	0.79
20	1.03
25	1.28
30	1.41
35	1.54
40	1.67
45	1.81
50	1.94
55	2.05
60	2.16
65	2.27
70	2.38
75	2.49
80	2.57
85	2.64
90	2.72
95	3.05
100	3.66

White
mustard
Mustard
Moutarde

Sinapis Alba



Quantity	kg/min
Seeding shaft	fb-f-fb-fb
2	0.22
5	0.45
10	0.82
15	1.20
20	1.57
25	1.95
30	2.32
35	2.70
40	3.07
45	3.45
50	3.82
55	4.17
60	4.52
65	4.88
70	5.23
75	5.58
80	5.91
85	6.24
90	6.57
95	6.94
100	8.43

Lucerne
Alfalfa
Lucerne

Medicago Sativa



Quantity	kg/min
Seeding shaft	fb-f-fb-fb
2	0.40
5	0.67
10	1.12
15	1.57
20	2.02
25	2.47
30	2.88
35	3.29
40	3.71
45	4.12
50	4.53
55	4.94
60	5.34
65	5.75
70	6.15
75	6.56
80	6.98
85	7.41
90	7.84
95	8.24
100	9.45

Red clover
Red
Clover
Trèfle
Rouge

Trifolium



Quantity	kg/min
Seeding shaft	fb-f-fb-fb
2	0.33
5	0.58
10	0.98
15	1.39
20	1.79
25	2.20
30	2.61
35	3.02
40	3.43
45	3.84
50	4.25
55	4.67
60	5.09
65	5.51
70	5.92
75	6.34
80	6.73
85	7.11
90	7.49
95	7.90
100	9.72

Phacelia
Phacelia
Phacélie

Phacelia tanacetifolia



Quantity	kg/min
Seeding shaft	fb-f-fb-fb
2	0.20
5	0.44
10	0.85
15	1.26
20	1.67
25	2.08
30	2.45
35	2.82
40	3.19
45	3.57
50	3.94
55	4.28
60	4.62
65	4.97
70	5.31
75	5.65
80	5.97
85	6.29
90	6.62
95	6.88
100	7.54

Canola
Rape
Colza

Brassica Napus



Quantity	kg/min	kg/min
Seeding shaft	fb-fb-f-fb	fb-efv-efv-fb
2	0.19	0.02
5	0.43	0.07
10	0.83	0.17
15	1.23	0.26
20	1.63	0.36
25	2.03	0.45
30	2.36	0.54
35	2.68	0.64
40	3.01	0.73
45	3.34	0.83
50	3.67	0.92
55	3.98	1.01
60	4.30	1.11
65	4.61	1.20
70	4.93	1.30
75	5.24	1.39
80	5.51	1.49
85	5.78	1.58
90	6.05	1.67
95	6.28	1.77
100	6.92	1.86

Pea
Pea
Pois

Pisum sativum

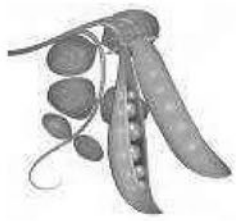

Quantity	kg/min	kg/min
Seeding shaft	fb-Flex20-fb	Flex 40
2	0.27	2.19
5	0.47	3.31
10	0.48	5.19
15	1.17	7.06
20	1.86	8.94
25	2.55	10.81
30	3.24	12.69
35	3.93	14.56
40	4.62	16.44
45	5.31	18.31
50	6.00	20.19
55	6.69	22.07
60	7.38	23.94
65	8.07	25.82
70	8.76	27.69
75	9.45	29.57
80	10.14	31.44
85	10.83	33.32
90	11.52	35.19
95	12.21	37.07
100	12.90	38.95

Pferde-Bean
Field beans
Féveroles

Macrotyloma uniflorum



Quantity	kg/min	kg/min
Seeding shaft	fb-Flex20-fb	Flex 40
2	0.81	2.16
5	1.27	3.30
10	2.03	5.20
15	2.79	7.11
20	3.55	9.01
25	4.31	10.91
30	5.07	12.82
35	5.82	14.72
40	6.58	16.62
45	7.34	18.52
50	8.10	20.43
55	8.86	22.33
60	9.62	24.23
65	10.38	26.14
70	11.14	28.04
75	11.90	29.94
80	12.66	31.84
85	13.42	33.75
90	14.18	35.65
95	14.94	37.55
100	15.70	39.46

Feuerbohne bzw. Käferbohne
Scarlet runner bean
Haricot rouge

Phaseolus coccineus



Quantity	kg/min
Seeding shaft	GGG
2	0.43
5	0.86
10	1.59
15	2.31
20	3.03
25	3.75
30	4.55
35	5.35
40	6.15
45	6.95
50	7.75
55	8.52
60	9.29
65	10.07
70	10.84
75	11.62
80	12.39
85	13.17
90	13.94
95	14.72
100	15.49

DC 37 bulk

Quantity	kg/min
Seeding shaft	GGG
2	2.65
5	4.88
10	8.62
15	12.35
20	16.08
25	19.81
30	23.06
35	26.31
40	29.56
45	32.81
50	36.06
55	38.88
60	41.71
65	44.53
70	47.36
75	50.18
80	53.01
85	55.83
90	58.65
95	61.48
100	64.30

NACKAS bulk

Quantity	kg/min
Seeding shaft	GGG
2	2.71
5	5.06
10	8.99
15	12.92
20	16.85
25	20.77
30	24.19
35	27.61
40	31.03
45	34.45
50	37.87
55	49.28
60	60.70
65	72.11
70	83.53
75	94.94
80	106.36
85	117.77
90	129.18
95	140.60
100	152.01

DC25 bulk

Quantity	kg/min
Seeding shaft	GGG
2	0.90
5	1.81
10	3.82
15	5.18
20	6.90
25	8.56
30	10.08
35	11.56
40	13.11
45	14.64
50	16.15
55	17.63
60	18.85
65	20.99
70	22.08
75	23.16
80	23.91
85	24.66
90	25.41
95	26.15
100	26.90

9.12 Calibration test / Regulation of the seed rate

To determine the desired spread rate, you must perform a calibration test.

Proceed as follows to perform the calibration test:

1. Remove the seeding shaft cover with the 3 star knob screws, which is located underneath the fan over the partition plates (Figure 42).

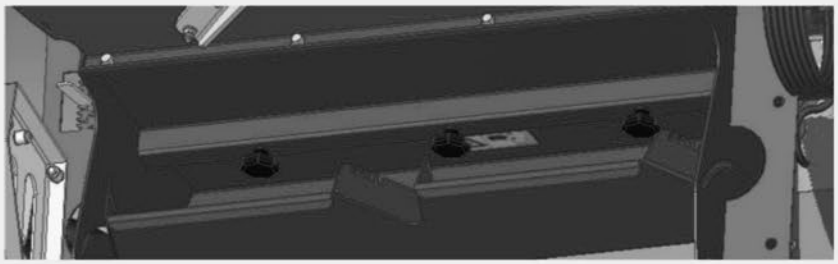

Figure 42

2. Loosen the two star knob screws on the sides of the calibration slide and pull the chute up through the elongated slots so that is positioned between the partition plates. Then fasten it again with the star knob screws (Figure 43).

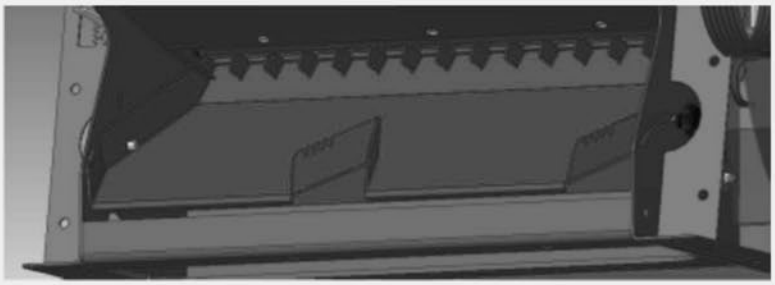

Figure 43

3. For the calibration tests, please use the supplied hopper to collect the seed.
4. Please proceed as described in the operating instructions for your control box.
5. You can also make slight adjustments to the spread rate using the bottom flap (brush adjustment, see Point 9.3). (**Please note:** ater adjusting the bottom flap, it is absolutely necessary to repeat the calibration test!)
6. After beginning operation, you should verify the spreading on the field. In particular, check the forward speed, the spread rate and distribution of the dispersion plates.
7. We recommend repeating the calibration test after seeding on 1 ha.

9.13 Operation on the field

When you start seeding, proceed as follows:

- Start your towing vehicle.
- Switch on the control box using the "On/Off" button.
- Switch on the fan and allow to run up to speed; the red LED control lamp will light up.
- Press the "Seeding shaft" button. When the green LED control lamp is lit for the "Seeding shaft" button, the gear motor that turns the seeding shaft and conveys the seed is switched on.

TIP!
These points are not applicable if you have a speed sensor.

- While you are turning at the headlands, you only have to press the "Seeding shaft" button so that the green LED is turned off. This stops the seeding shaft and only the fan is still running.

- When finishing the work, press the "On/Off" button on the control box to switch off the fan and the seeding shaft.

The following points must be observed for field operation:

- The fan should always be switched on during field operation.
- Verify the required spread rate.
- Check the width distribution (distance) of the dispersion plates.
- Check the height of the dispersion plates: Distance from the ground approx. 40 cm.
- Angle of the dispersion plates: attachment plate for the dispersion plates should be mounted at approx. 90° (perpendicular) to the ground.
- The spreading hoses should be routed slightly slanted down or horizontally on the implement.
- The hopper lid must be tightly sealed.

9.14 Emptying the hopper

To empty the hopper, push the emptying opening to the right (Figure 44) and fasten it there. Hold a bucket, a sack or a different container under it. To ensure complete emptying, you must also remove the seeding shaft cover, which is located underneath the fan, as well as the calibration slide.
Then actuate the menu point "Emptying" on the control box. With this menu point, the seeding shaft starts rotating automatically. Now let the seeding shaft rotate until the hopper is completely empty, and the seed wheels no longer deliver seed.

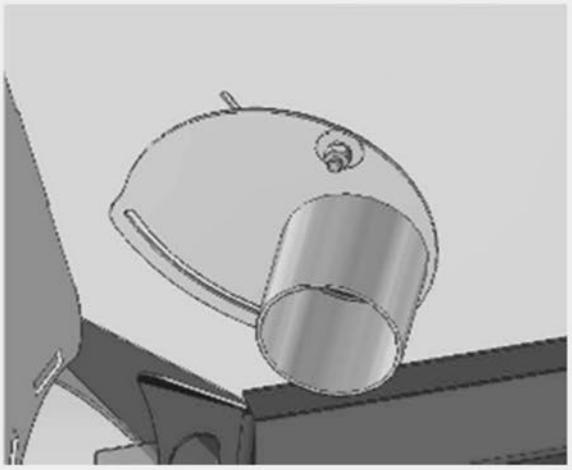

Figure 44

10 Cleaning, care, maintenance, and repairs

10.1 General

To maintain the implement in good condition even after a long service life, the following instructions must be observed:

- Original parts and accessories are designed especially for the machines or implements.
- Please note that parts and accessories not supplied by us have also not been tested and approved by us.
- The installation or use of such products can therefore possibly negatively change or impede the constructional properties of your implement. The manufacturer rules out any liability for damages resulting from the use of non-original parts and accessories.
- The manufacturer is not liable for any unauthorised modifications and the use of components and auxiliary parts.
- All bolted connections should be re-tightened at the latest after 3 operating hours and again after 20 hours, and then checked regularly. Loose bolts can cause significant consequential damage, which is not covered by the warranty.

10.2 Cleaning the seed drill

The seed drill must be cleaned inside and out on a regular basis to ensure long-term proper functioning. If not cleaned properly, clumps can form inside the seed drill due to seed residues.

To clean the seed drill:

1. Empty the seed hopper (for more information, see Chapter 9.14 Emptying the hopper).
2. Disconnect the seed drill from the power supply.
3. Remove the seeding shaft (for more information, see Chapter 9.2 Dismounting (changing) the seeding shaft).
4. Fold back the cover of the seed hopper to open it.
5. Clean the inside of the seed drill and the seed paths with compressed air.
6. Clean the outside of the seed drill with a moist cloth.

CAUTION!
Ensure that NO WATER enters the hopper or the implement. The inside of the implement can only be cleaned with compressed air.
The paint can be damaged by cleaning with excessive pressure.
Cover the suction channel with the supplied covering plate!

10.3 Repairs and service

In case of failure or damage to the spreader, please contact the service department. The contact data can be found on the last page of this operating manual.

11 Decommissioning, storage and disposal

11.1 Decommissioning the implement

To ensure that the implement remains fully functional even if it is out of operation for longer periods of time, it is important to take precautions for storage:

1. Completely remove all seed from the seed drill.
2. Clean the seed drill inside and out (see Point 10.2).
3. Store the seed drill in a dry place to prevent the formation of clumps or germs inside the implement.

11.2 Storage of the implement

The seed drill must be stored in a dry place protected from weather conditions to ensure that it remains functional, even if it is stored for a longer period of time.

11.3 Disposal

Disposal of the implement must be performed according to the local disposal regulations for machines.

12 Connection diagram PS MX3 #04

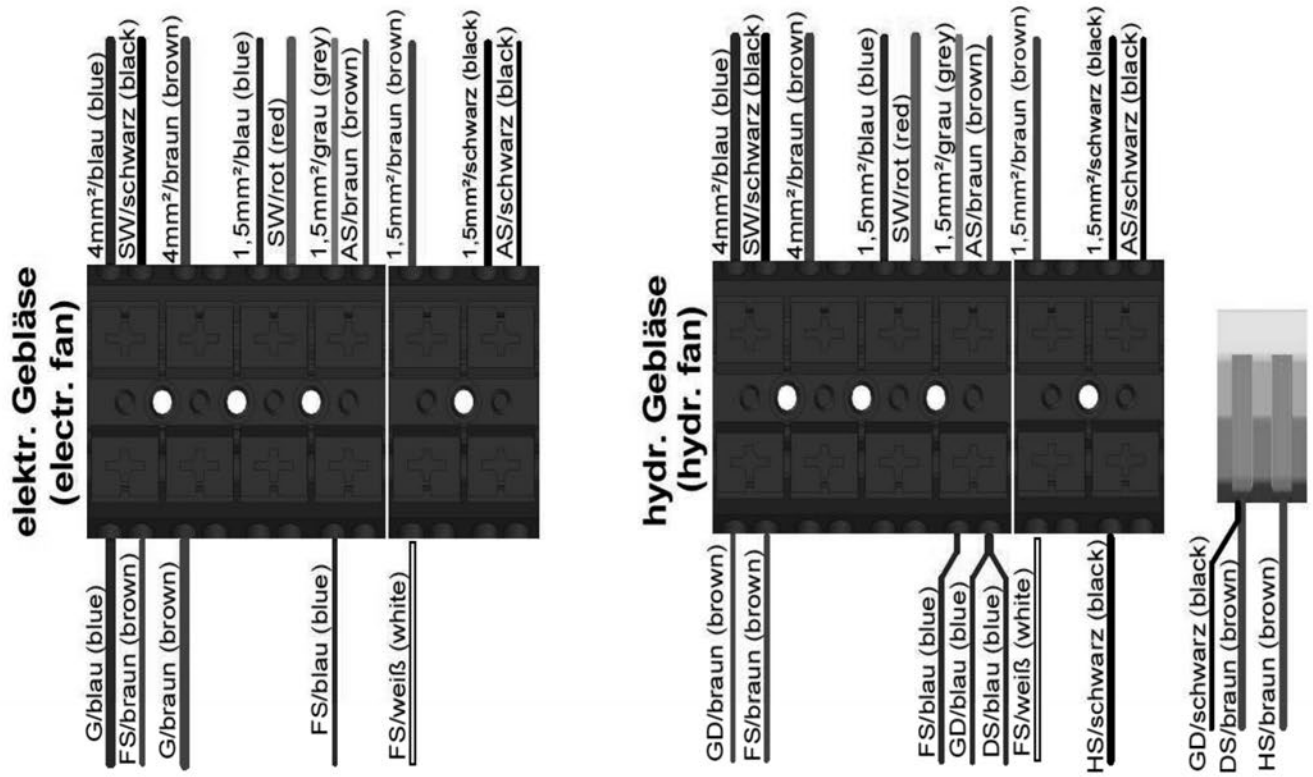

Stecker-PIN (plug-pin)	Gerätekabel (machine cable)	Gebläse (G) (fan)	Säwellenmotor (SW) (sowing shaft motor)	Füllstandsensor (FS) (fill level sensor)	Abdrehschalter (AS) (calibration button)	Druckschalter (DS) (pressure switch)	Gebläsedrehzahl-sensor (GD) (fan speed sensor)	Hydraulikschalter (HS) (hydraulic switch)
1	4 mm² / blau (blue)	4 mm² / blau (blue)	1,5 mm² / schwarz (black)	0,75 mm²/ braun (brown)			0,75 mm²/ braun (brown)	
2	4 mm² / braun (brown)	4 mm² / braun (brown)						
3	1,5 mm² / blau (blue)		1,5 mm² / rot (red)					
4	1,5 mm² / grau (grey)			0,75 mm² / blau (blue)	0,75 mm² / braun (brown)	1,5 mm² / blau (blue)	0,75 mm² / blau (blue)	
5	1,5mm² / braun (brown)			0,75 mm² / weiß (white)				
6	1,5 mm² / schwarz (black)				0,75 mm² / schwarz (black)			1,5 mm² / schwarz (black)
						1,5 mm² / braun (brown)	0,75 mm² / schwarz (black)	1,5 mm² / braun (brown)

Stripping length 10 mm!

Figure 45

13 Accessories

The following parts are available as accessories:

- **Cable extension 5 m (6-pin)**

This is a cable extension (5 m) for the implement cable (6-pin plug).
It is required when the soil tillage implement is longer than the 6 m cable installed ex-factory, or to allow practical routing of the cable.

Items included: 1 cable extension

Order number: Item no.: 00410-2-015



Figure 46

- **Cable extension 2 m (6-pin)**

If the standard installed 6 m implement cable is too short due of the length of the soil tillage implement and/or the implement structure, or if the cable cannot be routed practically, this extension cable can be ordered as accessories.

Items included: 1 cable extension

Order number: Item no.: 00410-2-133



Figure 47

- **Tractor cable set**

For the power supply to the control box without a standard 3-pin standard socket on the tractor, a retrofit kit is available as an accessory. The cable is 8 m long.
It is screwed directly on the terminals of the battery on the battery side, and at the other end, a 3-pin standard socket is installed.

Items included: 1 cable set

Order number: Item no.: 00410-2-022



Figure 48

- **Fan speed sensor**

Only possible with Control Box 6.2. This sensor shows the actual speed of the hydraulically driven fan.
Can be installed for HG 450 as of serial number 08002-01300.

Items included: 1 sensor

Order number: Item no.: 00410-2-197



Figure 49

- **Foreign body sieve**

This sieve serves to separate various foreign bodies as well as larger clumps of fertiliser.

Items included: 1 foreign body sieve

Order number: Item no.: 04011-2-118



Figure 50

CAUTION!
Misprints, errors and omissions excepted.

15 Index

Accessories 43
Accident prevention 6
Acre 33
Adjusting the hopper lid 31
Agitator 28, 29
Attachment of the control box 17
Bottom flap (brush adjustment) 27
Cable extension 43
Calibration test 39
CE conformity 4
Cleaning 40
Cleaning the seed drill 41
Connection diagram 42
Declaration of Conformity 4
Decommissioning 41
Directive 4
Dismounting (changing) the seeding shaft 26
Distribution Mounting Kit 15
Disposal 41
Electrical connections 18
Emptying the hopper 40
Fan pressure sensor 23
Fan speed sensor 44
Fill level sensor 31
Foreign body sieve 32, 44
Hexagonal shaft 14
Hole pattern 13
Hose connection 16
Hydraulic fan drive 18
Hydraulic pressure switch 23
Hydraulic pump 20
Hydraulic system (HG) 23
Identification 5
Imperial units 33
Installation of the dispersion plates 14
Intended use 6
Lateral distribution 17
Layout and mode of operation 14
Maintenance 8, 40
Measuring strips 21
Mounted implements 8
Mounting on an implement 14
Mounting the PS 14
Operation on the field 39
Pound 33
Pressure line 18
Regulation of the seed rate 39
Repairs 40
Repairs and service 41
Return line 18
Safety information 6
Safety signs 9
Scheme (HG) 22
Seeding shaft 24
Seeding shaft holder 26
Seeding tables 34
Service 5
Setting procedure (HG) 20
Setting table 21
Setting values (HG) 20
Settings 24
Spare parts orders 5
Spread rate 32
Storage 41
Swell air plate 30
Technical data 13
Tractor cable set 43
Type plate 5
Warranty 5
Working widths 32

Notes

Qualität für Profis

- seit 1997 -

APV – Technische Produkte GmbH
HEADQUARTERS
Dallein 15, 3753 Hötzelsdorf, Austria

Company details
APV - Technische Produkte GmbH, Managing Director: Ing. Jürgen Schöls, Dallein 15,
3753 Hötzelsdorf, Austria, marketing@apv.at, www.apv.at, VAT ID no.: ATU 5067 1107

Photo credits: Company photos © APV

Concept & text: Mag. Michaela Klein, Julia Zach, M.A., Ing. Peter Bauer, Claudia Redl
Graphics: Jürgen Undeutsch, M.A. (Undeutsch Media eU), Carina Fressner, B.A. (Undeutsch Media eU), Claudia Redl

Optional & Replacement Part / Kit Reference

Seed Rollers

289030 - Seed Wheel, Flex 40 (1)
289038 - Seed Wheel, Flex 20 (1)

Speed Sensors

289010 - 7-Pin Signal, Speed Sensor (1)
289011 - GPSa, Speed Sensor (1)
289012 - Radar, Speed Sensor (1)
289013 - Wheel, Speed Sensor (1)

Optional Kits

289040 - Inductive Shut-Off Sensor Kit (1)
290007 - Tractor Power Supply Kit (1)

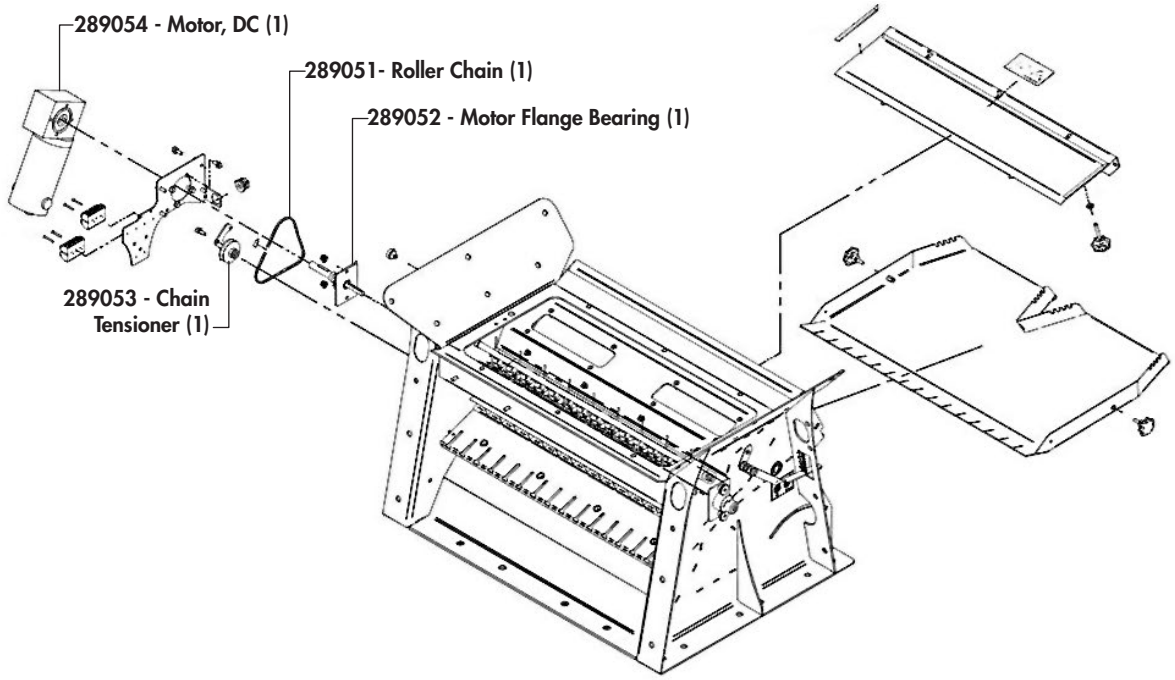

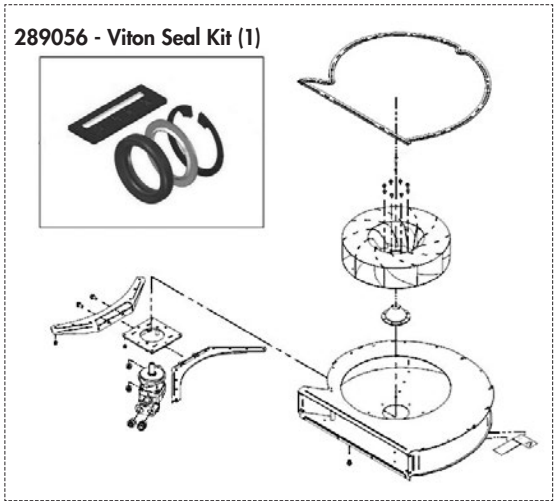

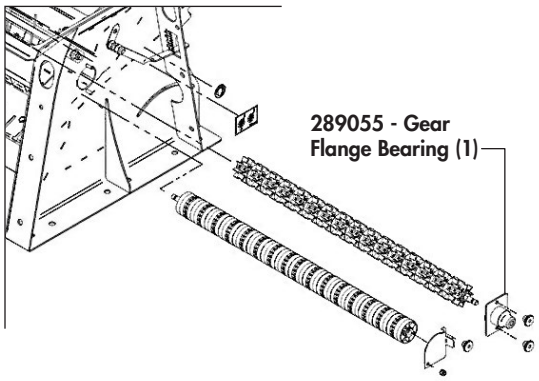

Other: 289057 - Foreign Body Screen (1)

Optional & Replacement Part / Kit Reference

289180 - PC28 Platform Kit

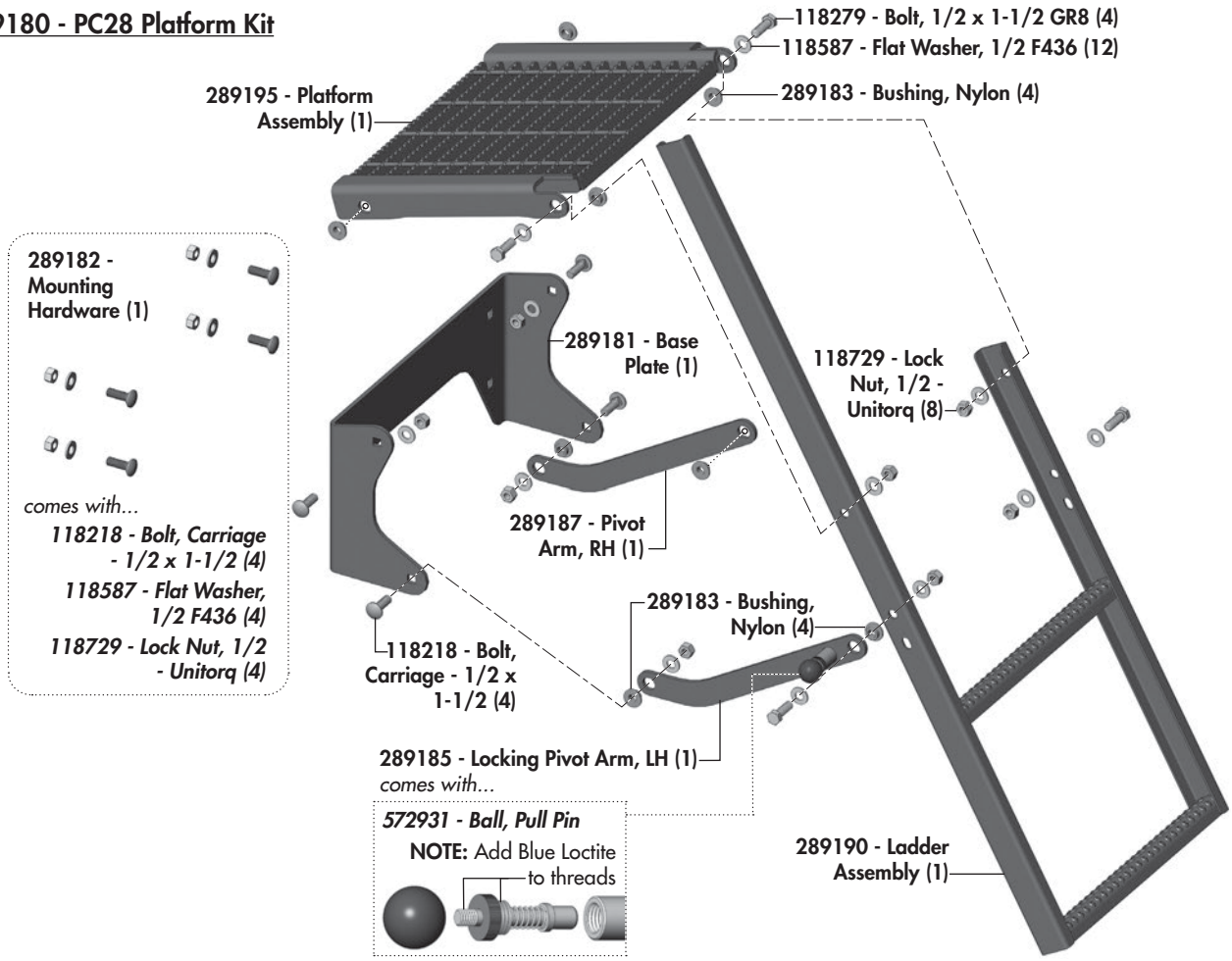



Raised Position

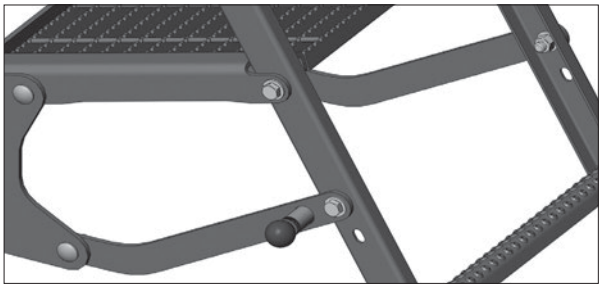

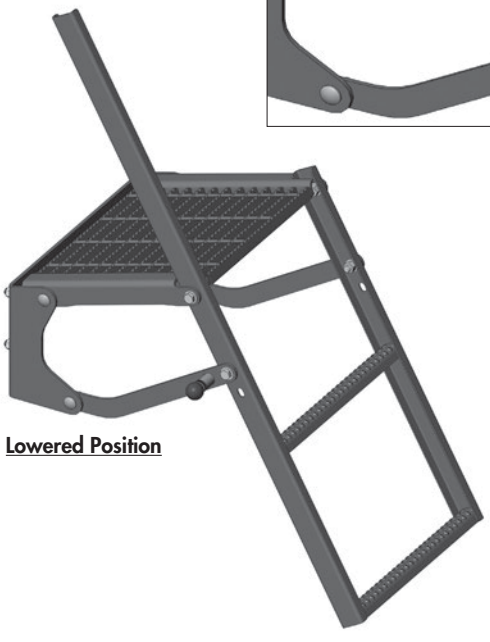

Lowered Position

1 Year
Limited Warranty

Degelman Industries LP ("Degelman") warrants to the original purchaser of PRO-CAST 28, purchased from an authorized Degelman dealer, that the equipment will be free from defects in material and workmanship for a period of one (1) year from the date of delivery. The obligation of Degelman to the purchaser under this warranty is limited to the repair or replacement of defective parts. Degelman reserves the right to inspect any equipment or parts which are claimed to have been defective in material or workmanship.

This warranty limits its replacement or repair coverage to what is consistent with the warranty of Degelman's suppliers of purchased components.

Replacement or repair parts installed in the equipment covered by this limited warranty are warranted for ninety (90) days from the date of delivery of such part or the expiration of the applicable new equipment warranty period, which ever occurs later. Warranted parts shall be provided at no cost to the user at an authorized Degelman dealer during regular working hours. Warranted replacement parts will either be replaced or rebuilt at Degelman's discretion.

Disclaimer of implied warranties & consequential damages

This warranty shall not be interpreted to render Degelman Industries LP liable for injury, death, property damage or damages of any kind, whether direct, consequential, or contingent to property. Without limiting the generality of the foregoing, Degelman shall not be liable for damages resulting from any cause beyond its reasonable control, including, without limitation, loss of crops, any expense or loss of labour, supplies, rental machinery or loss of use.

No other warranty of any kind whatsoever, express or implied is made with respect to this sale; and all implied warranties of merchantability and fitness for a particular purpose which exceed the obligations set forth in this written warranty are hereby disclaimed and excluded from this sale. This exclusion shall not apply in any jurisdiction where it is not permitted by law.

This limited warranty shall not apply:

1. If, in the sole opinion of Degelman, the unit has been subjected to misapplication, abuse, misuse, negligence accident or incorrect off-site machine set-up.
2. To any goods that have sustained damage or deterioration attributable to a lack of routine maintenance (eg. Check and Re-torque of fastening hardware and Hydraulic fluid purities)
3. If parts not made or supplied by Degelman have been used in the connection with the unit, if, in the sole judgement of Degelman such use affects its performance, safety, stability or reliability.
4. If the unit has been altered or repaired outside of an authorized Degelman dealership in a manner which, in the sole judgement of Degelman, affects its performance, safety, stability or reliability.
5. To expendable or wear items such as (eg. Seed shafts and hoses) and any other items that in the company's sole judgement are a wear item.

No employee or representative of Degelman Industries LP is authorized to change this limited warranty in any way or grant any other warranty unless such change is made in writing and signed by the Degelman Service Manager.

This limited warranty is subject to any future availability of supply, which may directly affect Degelman's ability to obtain materials or manufacture replacement parts.

Degelman reserves the right to make improvements in design or changes in specifications at any time, without incurring obligations to owners of equipment previously delivered.

This limited warranty is subject to compliance by the customer to the enclosed *Retail Customer's Responsibility Under Degelman Warranty.*

Warranty

Retail Customer's Responsibility Under Degelman Warranty.

It is the retail customer and/or Operator's responsibility to read the Operator's Manual, to operate, lubricate, maintain and store the equipment in accordance with all instructions and safety procedures. Failure of the operator to read the operators manual is a misuse of this equipment.

It is the retail customer and/or operators responsibility to inspect the product and to have any part(s) repaired or replaced when continued operation would cause damage or excessive wear to other parts or cause safety hazard.

It is the retail customer's responsibility to deliver the product to the authorized Degelman dealer, from whom he purchased it, for service or replacement of defective parts, which are covered by warranty. Repairs to be submitted for warranty consideration must be made within forty-five days of failure.

It is the Retail Customer's responsibility for any cost incurred by the dealer for hauling of the product for the purpose of performing a warranty obligation or inspection.

WARRANTY INFORMATION

Make certain the warranty registration card has been forwarded to:

Degelman Industries LP
Box 830 -272 Industrial Dr.
Regina, SK, Canada
S4P 3B1

Always give your dealer the serial number of your Degelman product when ordering parts or requesting service or other information.

The serial number is located on the serial number plate (*similar to the one shown in the image below*).
In the space provide, please record the model number, the serial number and the date of purchase to assist your dealer in providing you with prompt and efficient service.

SERIAL NUMBER: _____

MODEL NUMBER: _____

DATE OF PURCHASE: _____



© 2025 Degelman Industries LP