Degelman

OPERATOR & PARTS MANUAL

PRO-CAST 80
PRECISION GRANULAR APPLICATOR

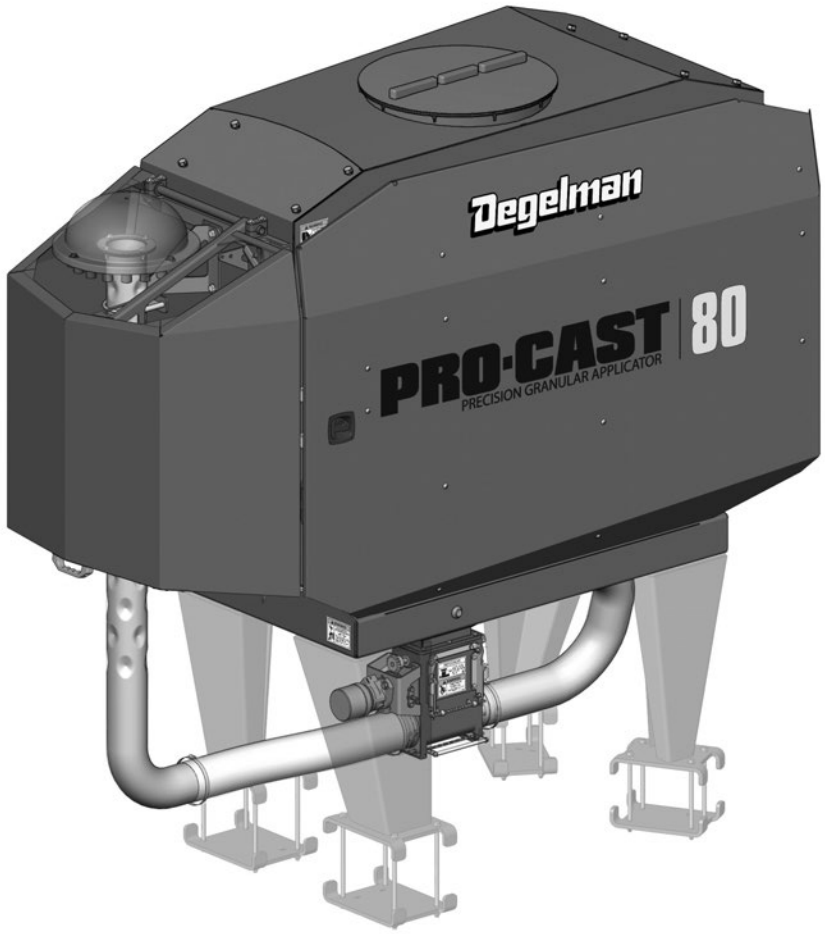

PRO-CAST 80
PRECISION GRANULAR APPLICATOR

143085 v1.3

DEGELMAN INDUSTRIES LP
BOX 830-272 INDUSTRIAL DRIVE,
REGINA, SK, CANADA, S4P 3B1
FAX 306.543.2140 PH 306.543.4447
1.800.667.3545 DEGELMAN.COM

PRO-CAST 80
PRECISION GRANULAR APPLICATOR

Degelman

PRO-CAST 80

PRECISION GRANULAR APPLICATOR

**** Reference Sheet Quick-Start Guide***

OPERATORS SECTION - TABLE OF CONTENTS

Introduction ***1***

Safety ***2***

Operation ***4***

Hook-Up *4*

Pre-Operation Checklist *5*

Settings & Adjustments *6*

Console Settings Overview ***10***

Service & Maintenance ***18***

Maintenance Checklist & Specifications *18*

Repair & Service *21*

Troubleshooting *23*

PARTS SECTION - TABLE OF CONTENTS

Part Assemblies & Components

Component Overview *27*

Tank Components *28*

Fan & Fan Hose Components *29*

Meter Components *30*

Platform Components *32*

Side Door Components *33*

Optional Kits *34*

Hydraulic Routing

Hydraulic Routing / Schematic *36*

Electrical Sensor Wiring *38*

Electrical Components - Trimble Monitor Kit *39*

Warranty ***40***

Reference Charts ***42***

DEGELMAN INDUSTRIES LP

BOX 830-272 INDUSTRIAL DRIVE,
REGINA, SK, CANADA, S4P 3B1
FAX 306.543.2140 PH 306.543.4447
1.800.667.3545 DEGELMAN.COM

⚠ IMPORTANT:



READ MANUAL

Introduction

PRO-CAST 80
PRECISION GRANULAR APPLICATOR

CONGRATULATIONS on your choice of a Degelman Pro-Cast to complement your farming operation. It has been designed and manufactured specifically for Degelman Pro-Till High Performance Discs and select Strawmaster series of heavy harrows for precision application of granular seed or herbicide products. Use this manual as your first source of information about this machine.

TO THE NEW OPERATOR OR OWNER - Safe, efficient and trouble free operation of your Degelman Pro-Cast requires that you and anyone else who will be operating or maintaining it, read and understand the Safety, Operation, Maintenance and Troubleshooting information contained within this manual.

By following the operating instructions in conjunction with a good maintenance program your machine will provide many years of trouble-free service. Keep this manual handy for frequent reference and to pass on to new operators or owners. Call your Degelman Dealer if you need assistance, information, or additional copies of the manual.

OPERATOR ORIENTATION - The directions left, right, front and rear, as mentioned throughout the manual, are as seen from the tractor drivers' seat and facing in the direction of travel.

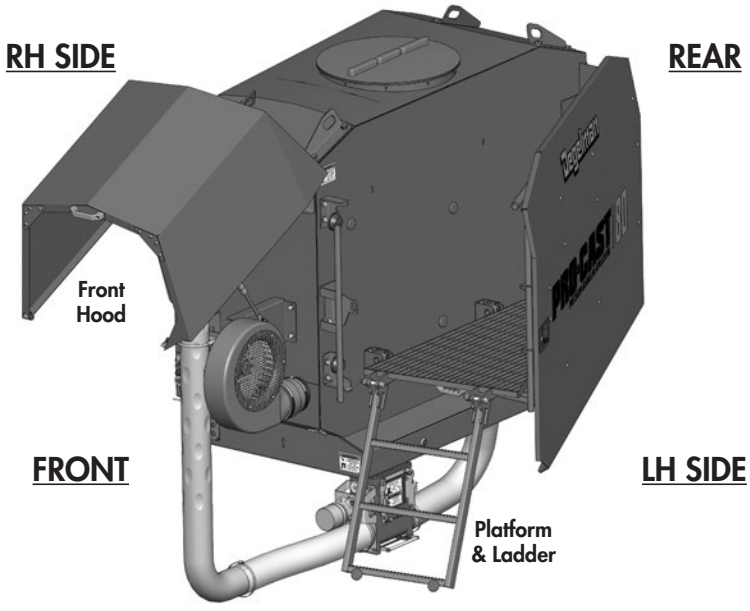

*Why is **SAFETY** important to **YOU**?*

3 BIG Reasons:

- **Accidents Can Disable and Kill**
- **Accidents Are Costly**
- **Accidents Can Be Avoided**



The **Safety Alert Symbol** means:

ATTENTION!
BECOME ALERT!
YOUR SAFETY IS INVOLVED!

SAFETY ALERT SYMBOL

The **Safety Alert Symbol** identifies important safety messages applied to the Pro-Cast and in this manual. When you see this symbol, be alert to the possibility of **injury or death**. Follow the instructions provided on the safety messages.

SIGNAL WORDS

Note the use of the Signal Words: **DANGER**, **WARNING**, and **CAUTION** with the safety messages. The appropriate Signal Word has been selected using the following guidelines:

DANGER — **DANGER:** Indicates an imminently hazardous situation that, if not avoided, **WILL** result in death or serious injury if proper precautions are not taken.

WARNING — **WARNING:** Indicates a potentially hazardous situation that, if not avoided, **COULD** result in death or serious injury if proper precautions are not taken.

CAUTION — **CAUTION:** Indicates a potentially hazardous situation that, if not avoided, **MAY** result in minor or moderate injury if proper practices are not taken, or, serves as a reminder to follow appropriate safety practices.

SAFETY

YOU are responsible for the safe operation and maintenance of your equipment.

YOU must ensure that you and anyone else who is going to operate, maintain or work around the equipment be familiar with the operating and maintenance procedures and related **safety** information contained in this manual.

Remember, **YOU** are the key to safety. Good safety practices not only protect you but also the people around you. Make these practices a working part of your safety program. Be certain that **EVERYONE** operating this equipment is familiar with the recommended operating and maintenance procedures and follows all the **safety** precautions.

Most accidents can be prevented. Do not risk injury or death by ignoring good safety practices.

- Equipment owners must give operating instructions to operators or employees before allowing them to operate the equipment, and at least annually thereafter per OSHA regulation 1928.51.
- The most important safety device on this equipment is a **SAFE** operator. It is the operator's responsibility to read and understand ALL Safety and Operating instructions in the manual and to follow these. All accidents can be avoided.
- A person who has not read and understood all operating and safety instructions is not qualified to operate the machine. An untrained operator exposes himself and bystanders to possible serious injury or death.
- Do not modify the equipment in any way. Unauthorized modification may impair the function and/or safety and could affect the life of the equipment.
- Think **Safety**! Work ***Safely***!

GENERAL SAFETY

1. Read and understand the Operator's Manual and all safety signs before operating, maintaining or adjusting.



2. Install and properly secure all shields and guards before operating. Use hitch pin with a mechanical locking device.
3. Have a first-aid kit available for use should the need arise and know how to use it.



4. Have a fire extinguisher available for use should the need arise and know how to use it.



5. Wear appropriate protective gear. This list includes but is not limited to:
   - A hard hat
   - Protective shoes with slip resistant soles
   - Protective glasses or goggles
   - Chemical resistant gloves
   - Wet weather gear
   - Hearing protection
   - Respirator or filter mask

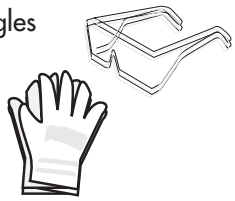

⚠ **IMPORTANT:** *Some granular products are more harmful than others. Read and strictly follow the manufacturer's instructions & safety guidelines found on/with the product container or package.*

6. Clear the area of people, especially small children, and remove foreign objects from the machine before starting and operating.
7. Do not allow riders.
8. Stop tractor engine, set park brake, remove ignition key and wait for all moving parts to stop before servicing, adjusting, repairing or unplugging.
9. Review safety related items with all operators annually.

Operation

TO THE NEW OPERATOR OR OWNER

The Degelman Pro-Cast is an ISOBUS compatible precision broadcast applicator with an 80 cubic foot capacity and is the perfect addition for your Degelman Industries Tillage machine.

Mountable on most Pro-Tills and select Strawmaster harrows, The Pro-Cast will improve your productivity by reducing the number of passes required for your farming operation. Whether you're seeding cover crops or applying granular chemical, the Pro-Cast is up for the job.

It is the responsibility of the owner or operator to read this manual carefully to learn how to operate the machine safely, and how to set it to provide maximum efficiency. Safety is everyone's business. By following safe operating practices, a safe environment is provided for the operator and bystanders.

The manual will take you step-by-step through your working day. By following the operating instructions in conjunction with a good maintenance program your machine will provide many years of trouble-free service.

PRINCIPLES OF OPERATION

Degelman Pro-Cast is designed to deliver an accurate spread of product in a variety of field conditions, whether you're seeding or applying granular herbicides.

Pro-Cast utilizes state of the art features including a Non-Pressurized tank, ISOBUS controls and a simple, accurate metering system that is designed to make granular application, and cover crop seeding safer and more efficient.

BRIEF OVERVIEW OF PRODUCT

- Mountable to:
  - Pro-Till 30/33/36/40/41/45
  - Strawmaster+ 70/90
  - Strawmaster PRO 80/100/120
  - Strawmaster X 50/70
- 80 cubic foot tank size
- ISOBUS compatible
- Precision granular applicator provides excellent rate control based on tractor speed.
- Intended use includes cover crop or granular chemical operation. Enhanced crop coverage in wet soil conditions. Seed where your air drill can't.

HOOK-UP / CONNECTING TO TRACTOR

Connect to the tractor following the standard implement connection procedures identified by the manufacturer along with the additional connections for the Pro-Cast.

The recommended way to connect the Pro-Cast is using 3/4" high flow couplers, connecting the pressure line to an SCV and the return to a motor return port (*high flow, low pressure return*), along with a case drain (*zero pressure return*).

If you're not able to connect 3/4" couplers to your tractor, reducers & 1/2" couplers are supplied in the toolbox. Although most tractors will run the Pro-Cast without issue from 1/2" couplers, they will restrict flow and generate more heat.

- **Hooking up the Hydraulic Hoses:**

  Order to connect:

  1. Case drain
  2. Return
  3. Pressure

- **Hook up the ISOBUS cable.**

  Order to disconnect:

  1. Pressure
  2. Return
  3. Case drain

⚠ TRANSPORT SAFETY

The Pro-Cast is mounted on an existing tillage implement. Therefore, also refer to the associated product for specific transport instructions.

⚠ **IMPORTANT:** It is not recommended to transport machine on highways with a loaded Pro-Cast tank. The additional weight will increase stress on the implement frame and may affect tire load rating.

⚠ **IMPORTANT:** Under no circumstances should there ever be riders while the Pro-Cast is in motion or transport. **NO RIDERS!**

Operation

⚠ OPERATING/MAINTENANCE SAFETY

- Read and understand the Operator's Manual before starting.
- Lower to ground, stop engine, place all controls in neutral, set park brake and remove ignition key before servicing, adjusting or repairing.
- Ensure that any hydraulic or other moving parts will not unintentionally engage or suddenly move position. Inspect and secure any hazards.
- Ensure that both the blower fan and metering unit are switched off.
- Keep hands, feet, hair and clothing away from all moving and/or rotating parts.
- Be careful when working around or maintaining a high pressure hydraulic system. Wear the proper hand and eye protection when searching for a pin hole leak in a hose or fitting.
- Place safety stands or large blocks under the frame before removing the tires or working beneath the machine.
- Do not allow riders.
- Clear area of all bystanders, especially children.
- Stay well back from machine when operating. Keep others away.

BREAK-IN

Although there are no operational restrictions on the Pro-Cast applicator when it is new, there are some mechanical checks that must be done to ensure the long term integrity of the unit. When using the machine for the first time, follow this procedure:

⚠ **IMPORTANT:** *It is important to follow the Break-In procedures especially those listed in the "Before using" section below to avoid damage:*

A. Before using:

1. Read Safety Info. & Operator's Manual.
2. Complete steps in "Pre-Operation Checklist".
3. Check all bolt tightness.

B. After operating for 2 hours:

1. Check all hardware. Tighten as required.
2. Check all hydraulic system connections. Tighten if any are leaking.

C. After operating for 8 hours:

1. Repeat Step B.
2. Go to the service schedule as outlined in the "Service & Maintenance" section.

⚠ GRANULAR CHEMICAL SAFETY

Some granular products are more harmful than others. Read and strictly follow the instructions found on the product container or package.

To avoid the possibility of burns, lung damage or eye irritation:

- Wear protective gloves and safety goggles.



- Avoid contact with skin.
- Avoid breathing dust or fumes. Wear a dust mask or respirator as directed by the chemical manufacturer.



- READ and follow the chemical manufacturer's instructions.

OVERVIEW OF FAN SPEED

The fan speed will need adjusting depending on what product is being applied or seeded. For example, with a **granular product** (*being applied at lower rate*) on a Pro-Till the fan speed will need to be much ***lower*** than if seeding with a **heavy seed** (*at higher rates*).

See "**Pro-Cast Fan Speed Reference**" chart in the settings & adjustments section.

PRE-OPERATION CHECKLIST

It is important for both personal safety and maintaining the good mechanical condition of the machine that this pre-operational checklist be followed.

Before operating the machine and each time thereafter, the following areas should be checked off:

- ☐ Check oil level in the tractor hydraulic reservoir. Top up as required.
- ☐ Check all bolt tightness.
- ☐ Inspect all hydraulic lines, hoses, fittings and couplers for tightness. Tighten if there are leaks. Use a clean cloth to wipe any accumulated dirt from the couplers before connecting to the tractor's hydraulic system.
- ☐ Check all the machine settings, refer to Settings & Adjustment sections. Perform adjustments as necessary.

Operation - Settings & Adjustments

OPERATING OVERVIEW

1. Set-up or select product profile. Ensure your product profile has the correct target rate.
2. Determine application conditions to decide on correct roller configuration:
   - Speed
   - Rate
   - Width
   - Product

   Refer to the roller selection charts in the reference section of this manual or the roller selection decal installed on your machine. Example of Decal shown:

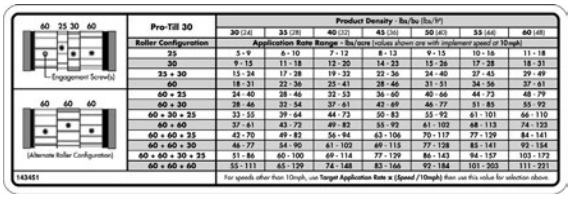

Pro-Till 30	Product Density - lbs/bu (lbs/ft³)						
	30 (24)	35 (28)	40 (32)	45 (36)	50 (40)	55 (44)	60 (48)
Roller Configuration	Application Rate Range - lbs/acre (values shown are with implement speed at 10mph)						
25	5 - 9	6 - 10	7 - 12	8 - 13	9 - 15	10 - 16	11 - 18
30	9 - 15	11 - 18	12 - 20	14 - 23	15 - 26	17 - 28	18 - 31
25 + 30	15 - 24	17 - 28	19 - 32	22 - 36	24 - 40	27 - 45	29 - 49
60	18 - 31	22 - 36	25 - 41	28 - 46	31 - 51	34 - 56	37 - 61
60 + 25	24 - 40	28 - 46	32 - 53	36 - 60	40 - 66	44 - 73	48 - 79
60 + 30	28 - 46	33 - 54	37 - 61	42 - 69	46 - 77	51 - 85	55 - 92
60 + 30 + 25	33 - 55	39 - 64	44 - 73	50 - 83	55 - 92	61 - 101	66 - 110
60 + 60	37 - 61	43 - 72	49 - 82	55 - 92	61 - 102	68 - 113	74 - 123
60 + 60 + 25	42 - 70	49 - 82	56 - 94	63 - 106	70 - 117	77 - 129	84 - 141
60 + 60 + 30	46 - 77	54 - 90	61 - 102	69 - 115	77 - 128	85 - 141	92 - 154
60 + 60 + 30 + 25	51 - 86	60 - 100	69 - 114	77 - 129	86 - 143	94 - 157	103 - 172
60 + 60 + 60	55 - 111	65 - 129	74 - 148	83 - 166	92 - 184	101 - 203	111 - 221

143451 — For speeds other than 10mph, use Target Application Rate x (Speed /10mph) then use this value for selection above.

3. Configure the meter roller components:

   Note: *If tank is already loaded, use the shut-off slide to separate the tank from the meter.*

   - Change roller configuration by opening side door of meter and engaging or disengaging rollers as *required.*
   - Rollers are engaged or disengaged by using the drive screws that pass through the meter shaft. *(The meter may need to be jogged in calibration mode to orient the drive screws and/or meter shaft to gain access.)*

   Note: *Additional drive screws are stored in toolbox.*

   - Engage or disengage the agitator/mixer shaft to your preference by sliding the plastic gear on or off the main shaft gear. Generally the agitator shaft is used for product that doesn't flow well.
4. Load Tank.
5. Calibrate machine with product in tank to determine your calibration factor. *(Refer to Calibration Procedure Section)*
6. Double check settings.
   - Check speed setting to ensure either GPS or wheel speed selected
   - Check correct application rate
   - Ensure hydraulics are engaged
7. Turn on fan.
8. Turn on Master Switch.
9. Drive.

FIRST TIME CONNECTING TO TRACTOR

Note that the first time the machine is connected to a tractor, it will take longer than usual to load. The object pool needs to be loaded into the tractors memory. When this is happening, it will display this symbol . *(Symbol may vary, Case IH graphic shown)*

Once the object pool has loaded, each time the machine is powered up you will see a floppy disc instead of the object pool icon.

If your monitor displays an error on first connection, it has likely "timed out" while trying to load the object pool. This can be resolved by clearing the monitor's object pool. Refer to your tractor or monitor manual for instructions.

SOFTWARE SETTINGS & WALK THROUGH

Refer to explanations for settings in the "Console Settings Overview" section.

SENSOR TARGET DISTANCES

Check the target distances for sensors that may have shifted. The typical Sensor Target distance is 1-2mm, depending on which sensor is being set.

- **Meter Speed Sensor:** If motor sensor is mounted directly into motor housing, no adjusment is required, correct gap is set when fully installed.

  Alternate Motor Sensor Bracket Mount Versions:
  = **1mm** *(3/64")* - (1 full turn back from touching)
- **Meter Calibration Door Sensor** = **1-2mm** *(3/64"-5/64")* (1-2 full turns back from touching)
- **Fan Speed Sensor** = **2mm** *(5/64")* (2 full turns back from touching)
- **Tank Level Sensor:** Must protrude through threaded bushing or mounting plate by at least **6mm** *(1/4")*.

CALIBRATION DOOR SENSOR

Calibration Door Sensor *(In metering settings)*:

- "Open Lo" - *with sensor option*
- "No" - *if no sensor option*

Note: *"Open Hi" setting may be required if wiring polarity is opposite.*

⚠ IMPORTANT: BEFORE TURNING FAN OFF

IMPORTANT: *It is important to first turn off the **Master** (seeding) **Switch** and continue to run the fan in order to clear out residue in the line **prior** to switching off the fan. If the fan is turned off while product is still in the lines, the product will remain in the lines. This may result in plugging issues when restarting.*

METER ROLLER COMPRESSION ADJUSTMENTS

When inspecting the meter rollers, it is important to recognise if the roller axial *(side-to-side)* compression is too high or too low.

Low Compression: Roller wheels that no longer seal properly against the spacer plates can allow pressurized air to enter the seed tank preventing the rollers from filling properly. Loss of compression can be caused by normal wear of the roller wheels over time or it may also result from insufficient compression of the foam spring during meter wheel component assembly *(not enough spacer plates)*. Allowing abrasive material between rollers and spacer plates will also accelerate wear.

High Compression: Roller wheels will overheat and quickly wear out if the compression is too high. If the ribs of the roller wheels appear to be wavy or curl at the ends, this is a sign that the compression is too high typically caused when too many spacer plates are installed when configuring the rollers.

NOTE: *Ensure that the foam spring protrudes only 2-3mm past the meter housing when assembling.*



Low compression: Insufficient side pressure creates gaps.



High compression: Wheel rib edges become curled/wavy.

METER ROLLER SLIPPED SPACER PLATE

IMPORTANT: *Never close the metering door when there is strong resistance. Foreign objects may be present or a roller separator/spacer plate(s) may have slipped out of correct position. Forcing the door closed may result in damage to threaded door rod or other components.*

It is possible for the roller wheel spacer plates to slip out of position when rearraging or switching the roller wheels. This can be identified when the roller wheel ribs no longer extend slightly past the edge of the spacer plates.

If the spacer plate(s) have slipped, you may try to reposition them by hand but you may need to open the side of the housing with the same procedure as replacing the rollers in order to realign the components.

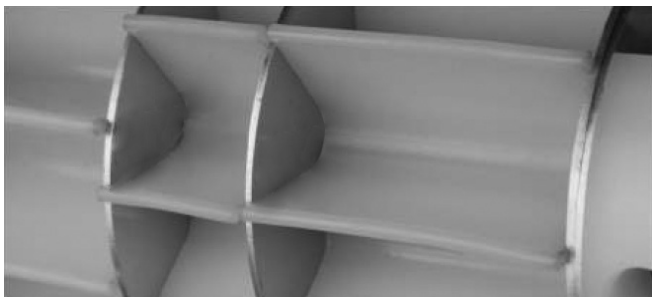

Correct roller/spacer plate alignment.

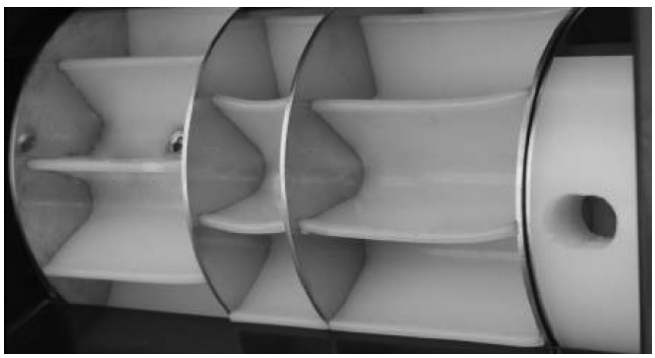

Significantly slipped spacer plate alignment.

CALIBRATION PROCEDURE

1. Insert shut-off slide if the tank contains product. Open side door of meter to get access to meter rollers. Consider wheel engagement - *How many wheels do you need activated to achieve optimal function?*

   • Optimal meter speed range is 60-80 RPM.

   • The meter speed is determined from a combination of tractor speed, machine width, target rate, and calibration factor.

   Refer to the roller selection charts in the reference section of this manual or the roller selection decal installed on your machine. Example of Decal shown:

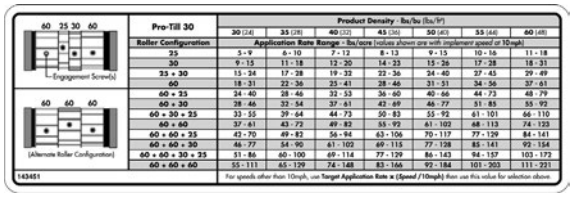

2. Insert or remove the roller drive screws as required.
3. Close meter side door.
4. From main screen on display, press the gear icon to bring up the settings.
5. In settings, select the meter icon in the top right hand corner.
6. Set initial calibration factor based on calibration factor chart. *(Larger chart found in reference section.)*
7. In Meter Drive settings, select the calibration icon on the right.

CALIBRATION FACTOR CHART	Product Density - lbs/bu *(lbs/ft3)*						
	30 *(24)*	35 *(28)*	40 *(32)*	45 *(36)*	50 *(40)*	55 *(44)*	60 *(48)*
Roller Configuration	Calibration Factor - lbs/rev						
25	0.07	0.08	0.1	0.11	0.12	0.13	0.14
30	0.12	0.14	0.17	0.19	0.21	0.23	0.25
25 + 30	0.2	0.23	0.26	0.29	0.33	0.36	0.39
60	0.25	0.29	0.33	0.37	0.41	0.46	0.5
60 +25	0.32	0.37	0.43	0.48	0.53	0.59	0.64
60 + 30	0.37	0.43	0.5	0.56	0.62	0.68	0.75
60 + 30 + 25	0.44	0.52	0.59	0.67	0.74	0.82	0.89
60 + 60	0.5	0.58	0.66	0.75	0.83	0.91	0.99
60 + 60 + 25	0.57	0.66	0.76	0.85	0.95	1.04	1.14
60 + 60 + 30	0.62	0.72	0.83	0.93	1.04	1.14	1.24
60 + 60 + 30 + 25	0.69	0.81	0.92	1.04	1.16	1.27	1.39
60 + 60 + 60	0.75	0.87	0.99	1.12	1.24	1.37	1.49

8. Pre-fill the meter wheels with product to be calibrated using the pre-fill button *(if required)*.
9. Use expected field speed.
10. Start the test with the play button ▶.
11. If operator has a calibration door sensor, and the calibration door is closed, the monitor will alarm to warn the operator that the calibration door is closed. Close warning and hit play again to enter the calibration test.
12. Grab the scale and calibration bag (*from toolbox*).
13. Hang the scale under the Pro-Cast frame & turn on.
14. Hang calibration bag on the scale and tare *(zero)*.
15. Slide calibration bag underneath meter.
16. Press the Green button to engage the calibration process. Ensure hands are clear of the meter gears.

    Note: *If the meter fails to start, it is most likely because the expected meter speed is too low. This is controlled by adjusting the* **calibration factor**, **tractor speed**, *or the* **application rate**.
17. When bag is nearing capacity, press the green button again. There can be a delay after pressing the button until it stops, so it is best not to wait until the last moment. Aim for either a 3/4 full bag or, *for low application rates*, wait 1-2 minutes.
18. Remove bag from underneath the meter and hook on to the scale to get the product weight.
19. Now go back to the tractor and look at the monitor.
20. Press the play button ▶ again to advance to the next screen.
21. The monitor will display the expected weight output based on the number of rotational pulses it detected from the meter speed sensor.
22. Change the expected weight to the actual weight and complete the process.
23. The monitor will display the new calibration factor based on the difference.
24. If the percentage error ***(Actual/Expected x 100)*** is outside of farmers expected accuracy, repeat the process to refine the calibration factor.

    Note: *If the calibration factor is not changing or changing by very small increments (ie. 0.01), the machine is calibrated.*
25. A demonstration video of the calibration process is posted on our YouTube Channel. Follow the links from our website or visit:

    https://www.youtube.com/user/degelmanind

FAN SPEED *(Hyd Block Adjustment)*

IMPORTANT: *Fan speed should be adjusted via tractor flow if possible. Adjusting the hydraulic manifold should only be done if necessary.*

Adjustments to the hydraulic block flow controls adjust hydraulic flow and can thus change fan speed to prevent free wheeling of the meter motor. See below for a brief overview on how fan speed can be adjusted.

The hydraulic flow can be adjusted with 2 flow controls on the hydraulic block:

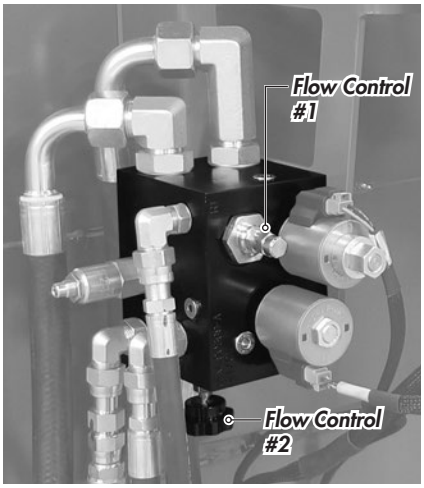

1. The first flow control splits flow between the fan and meter motor. This is adjusted by using a set screw on the front of the hydraulic block. To adjust:

   i. Remove cap. *(9/16" wrench)*

   ii. Use Allen key *(3/16")* to turn in or out.

   In = more flow to the fan.
   Out = more flow to the meter.

   - This will be factory set. Adjustments required should be minor if any.
   - Meter motor must be stationary. Too much hydraulic flow to the meter motor will result in the meter spinning when turned off. This will lead to plugging of the machine.
   - Optimal setting is when the fan remains stationary as hydraulics are engaged. Once hydraulics are engaged and the fan is turned on, it is common for it to remain rotating slowly after the fan is turned off.

2. The second flow control is adjusted by the knob on the bottom of the hydraulic block.
   - This control will restrict the fan motor flow and can be used to directly adjust fan speed.
   - Alternatively, the flow controls on the tractor can be used to control fan speed. For reference, we have been using a flow percentage of 51% on our high flow ports while operating this machine.

Note: *It is normal for the fan to continue spinning slowly (500-700 RPM) when fan is shut off on the monitor & hydraulics are still engaged after initial start-up.*

PRO-CAST FAN SPEED REFERENCE

The following chart is meant as a starting point to help assist you in finding the optimum fan speed for your particular application. Some factors to keep in mind are:

Fan speed too low	=	Plugging
In between	=	Optimal fan speed
Fan speed too high	=	Bridging

Note: *Always test new products in simulation mode to confirm an optimal fan speed.*

Implement	Product	Rate (lbs/ac)	Fan Speed (RPM)
Pro-Till	Granular	<10	1800-2000
		10-15	2000-2300
		15-20	2200-2500
		>20	2400-up
	Seed (Light)	<10	1800-2200
		10-25	2200-2500
		25-50	2500-3000
	Seed (Heavy)	25-50	3000-3500
		50-100	3400-4000
		100-150	4000-4800
		150-200	4800-6000
Strawmaster	Granular	<10	2700-3000
		10-15	2900-3200
		15-20	3100-3400
		>20	3300-up

Console Settings Overview

CONSOLE DISPLAY OVERVIEW

The following images are screenshots of the display screens an operator may use in day-to-day operation. Some details are provided to point out key areas.

NOTE: *Settings could vary based on operators preference.*

Main Screen

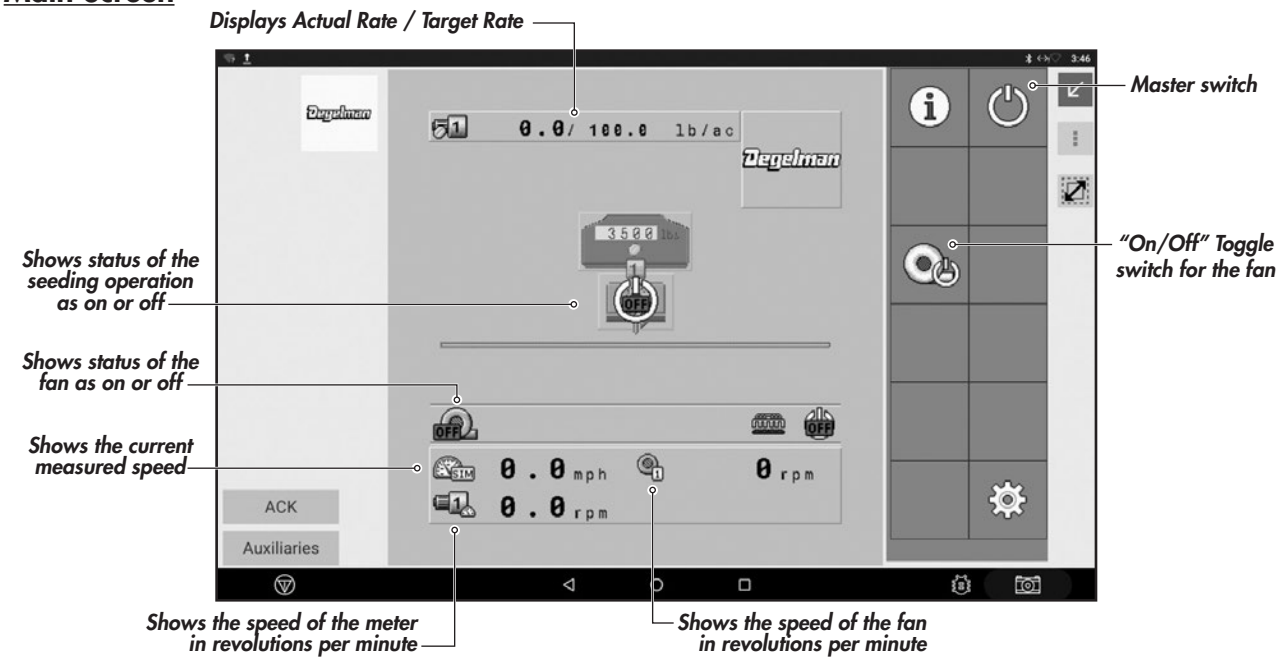

Settings Screen

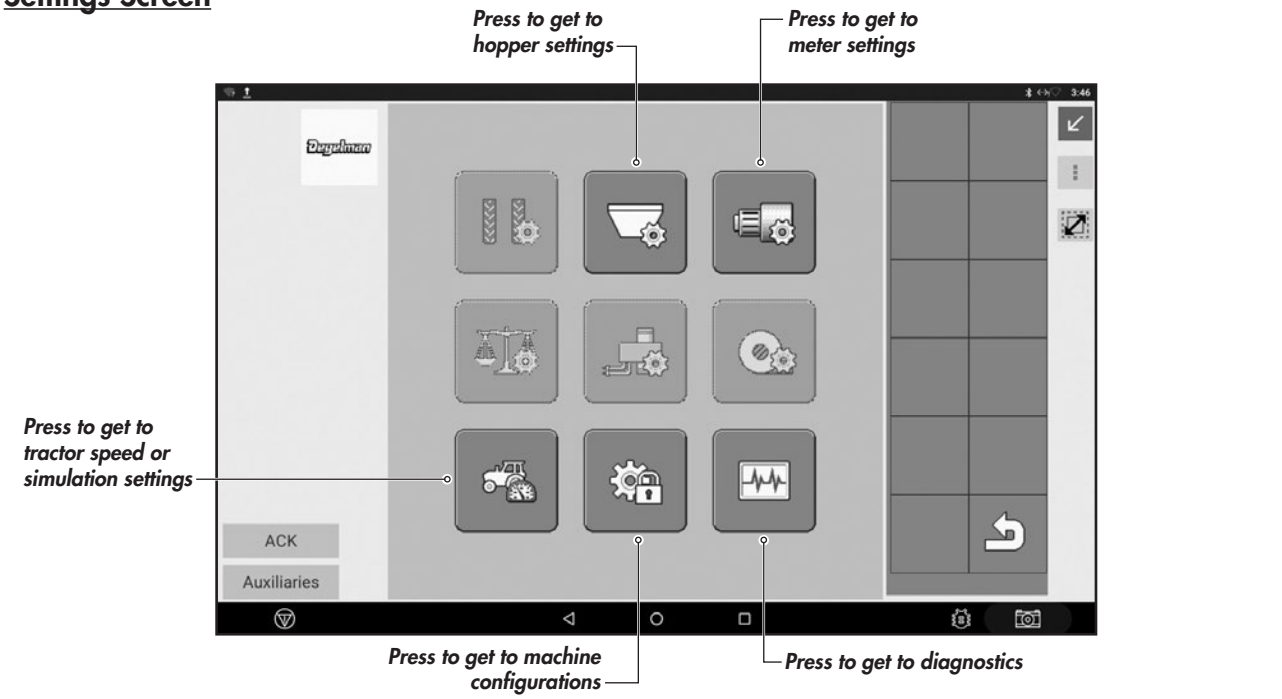

Console Settings Overview

Hopper Settings Screen

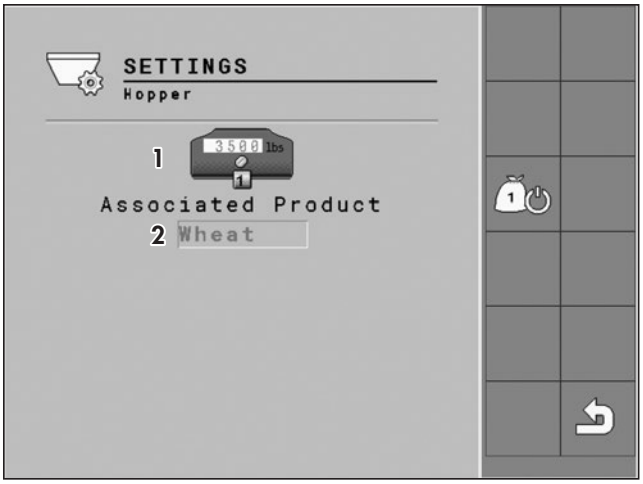

1. **Weight** - The hopper contents can be adjusted to the weight that is in the tank. With no scales, this number will need to be known by the farmer. For example, the volume of bulk bag. If this value is not known, this total can be set to any number and used as a bench mark for how much product has been applied.
2. **Product** - Change the product in the tank to another, previously set up, material.

Metering Drive Settings Screen

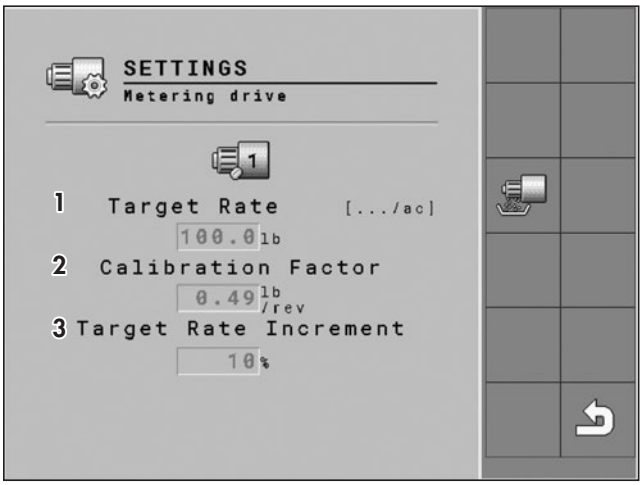

This screen will auto populate with values defined by the hopper material profile. However, they can be adjusted here on a temporary basis.

1. **Target Rate** - Target rate in lbs/acre.
2. **Calibration Factor** - Calibration factor can be manually edited here if known. But, the calibration process will adjust this based on test results.
3. **Target Rate Increment** - This value changes the % rate the target rate can be adjusted on the main screen. In this case, bumping the rate up will change the target rate from 100 lbs/acre to 110 lbs/acre.

Calibration Set-up Screen

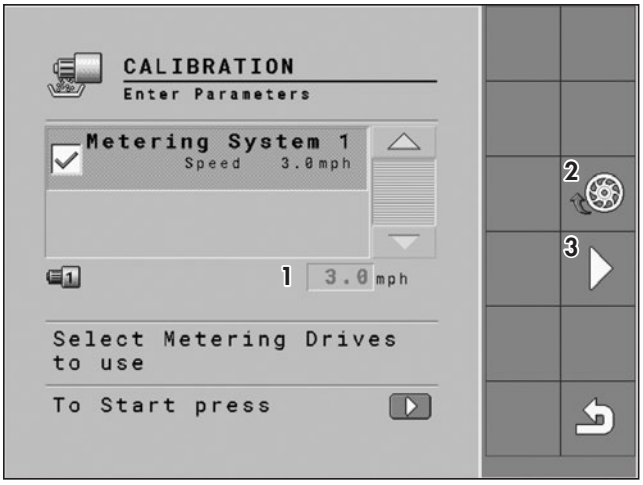

1. **Speed** - Adjusting this value will change the speed of the meter during the test. It determines the roller speed by using the value inserted, the initial calibration factor, and the machine width.

   Note: If calibration speed is out of range you can adjust this speed accordingly. But, it may mean that your calibration factor is too heavy or light.
2. **Pre-load** - If the meter has been recently cleaned, use this button to pre load the rollers with material. The calibration starts counting expected material as soon as the rollers start spinning. You will get less accurate results if the test starts with no material loaded in the rollers.
3. **Start Test** - Once you are satisfied with the calibration test set-up hit this button to begin the test.

Console Settings Overview

Calibration Tracker Screen

Once the calibration test starts, this will be the displayed screen which has instructions for how to proceed. Some key information is shown.

1. **Pulses** - Shows the number of electronic pulses received from the meter speed sensor. Each pulse corresponds to a tooth on the encoder. There are **36 pulses/revolution** on machines with a *motor housing* speed sensor location, **40 pulses** if the stainless steel gear is used as a target, **or 24 pulses/revolution** on earlier machines with a separate bolt-on (*steel, painted black*) target plate.
2. **Product released** - Based on the existing parameters, the software uses the number of pulses to estimate the expected amount of product released.
3. **Cancel Test** - To cancel the test, hit this button. This will take you to the previous screen.

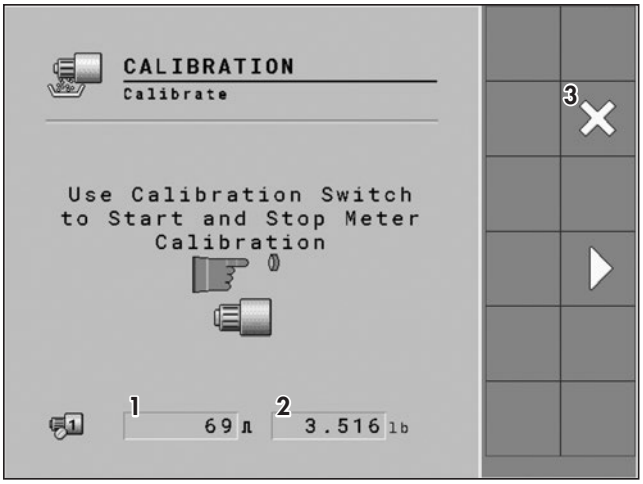

Calibration Weight Screen

After you start and then stop the meter calibration, a metered amount of product will have been collected in the calibration bag.

a. Record the **actual** weight of product calculated from properly weighing the calibration bag with scale.

b. Press the play button again to advance to the next screen.

c. The monitor will display the ***expected*** weight output based on the number of rotational pulses it detected from the meter speed sensor.

d. Compare the ***expected*** weight to the **actual** weight. While up to the operator, typically a percentage of error of 5% to 10% has been used.

e. Change the ***expected*** weight to the **actual** weight and complete the process.

f. The monitor will display the new calibration factor based on the difference.

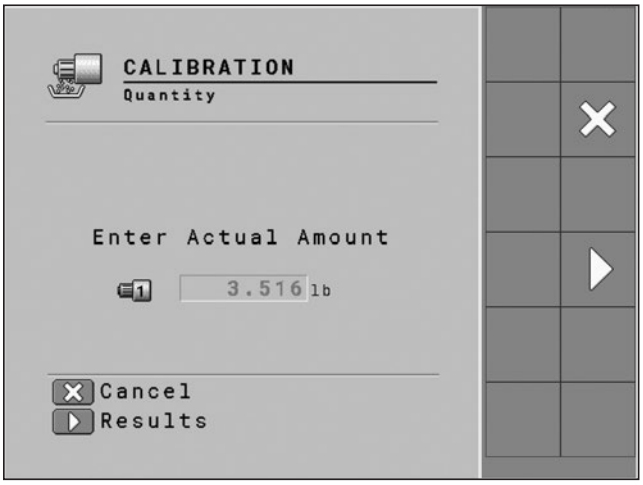

g. If the percentage % of error is outside of operator's expected accuracy, repeat the process to refine the calibration factor.

Speed Setting Screen

1. **Simulation Speed** - You can change the simulation speed by inserting a value and having the box checked. The simulation option allows to you to set a tractor speed manually and test the machine while stationary. This is a great option for troubleshooting.

a. GPS option - Uses GPS input to determine tractor speed.

b. Wheel option - Uses the tractors wheel speed to determine tractor speed. To ensure accurate operation, ensure your tractor settings are correct.

c. Implement option - Can only be used if an external implement mounted speed sensor is being used. As of December 23, 2020, this option has not been tested.

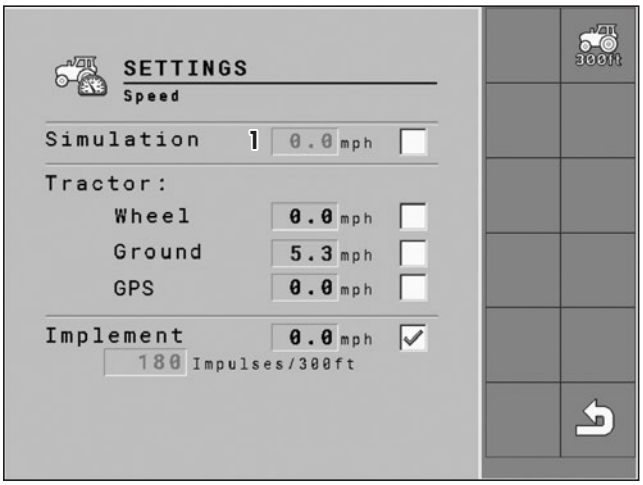

Console Settings Overview

Configurations Screen



1. Opens the **Implement** configuration screen
2. Opens the **Hopper** configuration screen
3. Opens the **Product** configuration screen
4. Opens the **Meter** configuration screen
5. Opens the **Shoot** configuration screen
6. Opens the **Fan** configuration screen
7. Opens the **Feedback** configuration screen
8. Opens the **Password** configuration screen

   (Note: If it becomes necessary to unlock the "***Advanced Settings***", use passcode: **1962**)

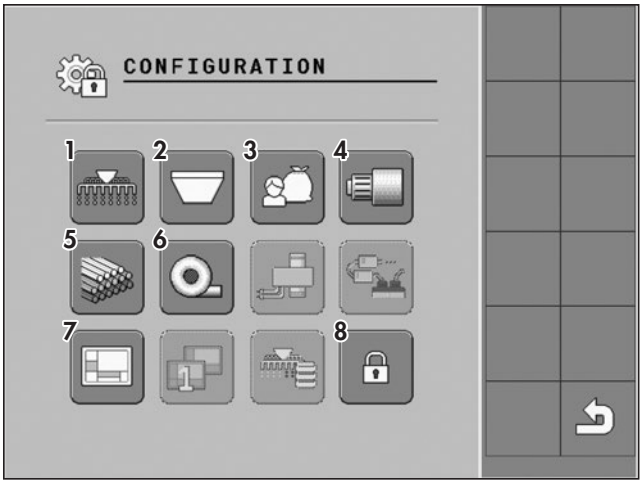

Implement Configuration Screen



1. **Shut-off Speed** - The shut off speed defines the speed at which metering will stop while in motion. For example, if you were to slow down to 0.8 mph the metering will stop.

2. **Override Speed** - The speed at which the meter would restart after stopping due to hitting the shut off speed.

3. **Optional Workswitch** - The optional work switch allows the unit to shut off when the implement is raised. This removes the need to turn off the metering system separately and improves operation. Then, the implement simply engages the ground to start the meter again.

   This option allows you to change the input for the switch. Depending on configuration, this may change.

   (*Generally, this will more likely be used on Pro-Till machines rather than Strawmaster.*)

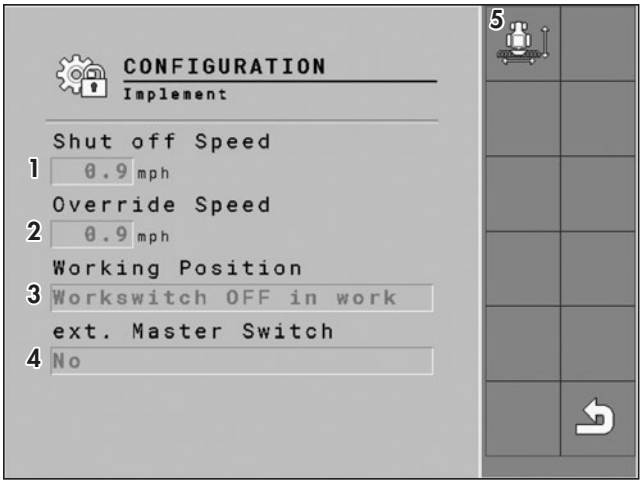

4. **External Master Switch** - It is possible to add an external master switch to the system. This will act like hitting the meter on/off button on the main screen. Use this setting to incorporate it.

   (*This can be used on a Strawmaster in place of a workswitch.*)

5. **Machine Geometry** - Press this to input the machine geometry.

Console Settings Overview

Geometry Configuration Screen

1. Input the **Hitch** to **Seeding Point** distance.
2. Input the **Seeder** to **Seeding Point** distance.

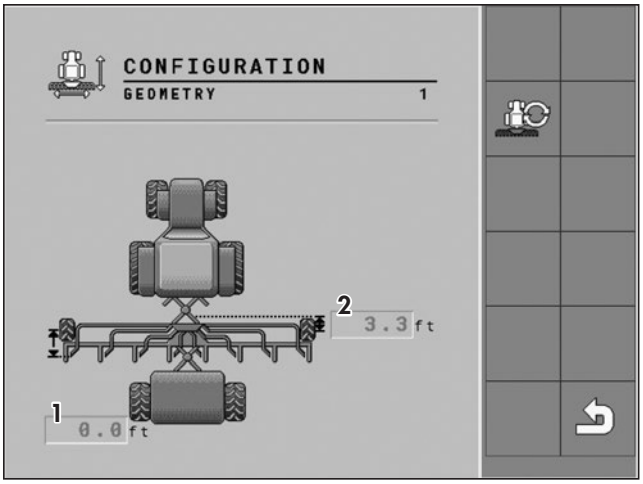

Hopper Configuration Screen

This screen will auto populate with values defined by the hopper material profile. However, they can be adjusted here on a temporary basis.

1. **Associated Product** - Change hopper product.
2. **Fill Level Sensor** - Change the settings for the tank level sensor here.

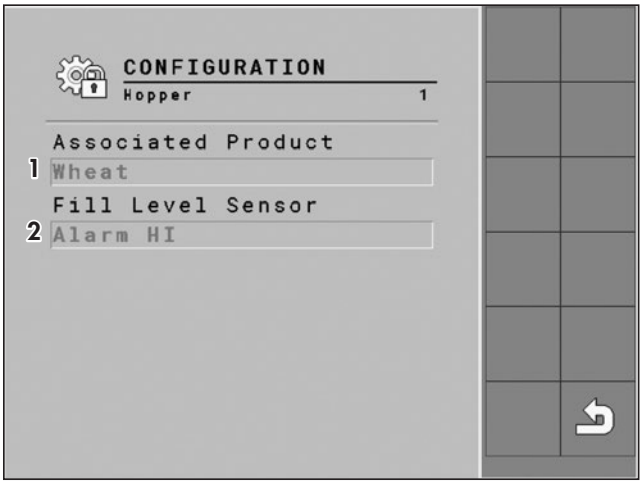

Console Settings Overview

Product Configuration Screen

1. **Renaming** - Rename product profiles here.
2. **Product Type** - Type of material. Seed or granular.
3. **Target Rate** - Preferred target rate for the product.
4. **Target Rate Increment** - Target rate increment is how much the target rate changes with incremental changes on the main screen.
5. **Calibration Factor** - Input the calibration factor here (*based on experience*). A calibration test is recommended, but with an accurate calibration factor, one test should be enough to confirm. *(See "**Calibration Factor Chart**" in reference section.)*
6. Opens the **Product Database**.

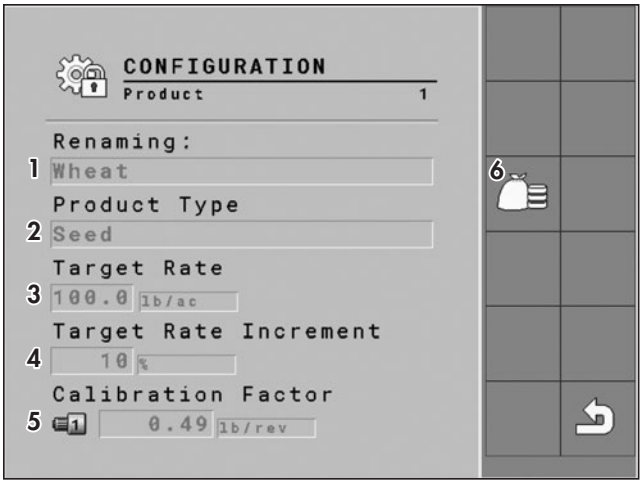

Product Database Configuration Screen

1. **Renaming** - Rename product profiles here.
2. **Product Type** - Type of material. Seed or granular.
3. **Target Rate** - Preferred target rate for the product.
4. **Target Rate Increment** - Target rate increment is how much the target rate changes with incremental changes on the main screen.
5. **Calibration Factor** - Input calibration factor based on experience here. I would still recommend a calibration test. But with an accurate calibration factor, one test should be enough to confirm. *(See "**Calibration Factor Chart**" in reference section.)*
6. Create a **New Material Profile**.
7. Press to **cycle through** existing product profiles.

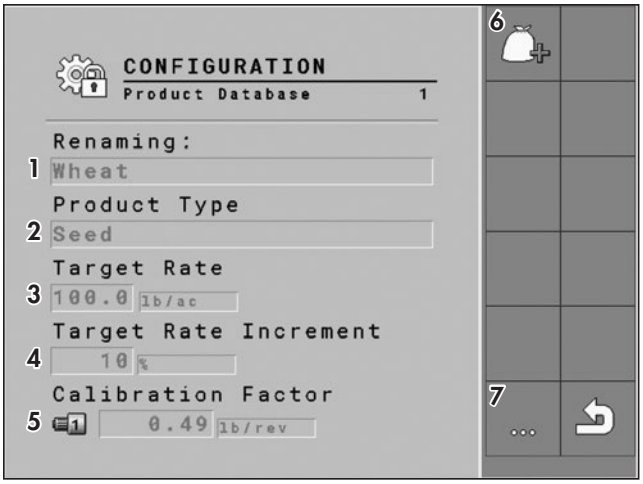

"New" Product Database Configuration

1. **Renaming** - Rename product profiles here.
2. **Product Type** - Type of material. Seed of granular.
3. **Target Rate** - Preferred target rate for the product.
4. **Target Rate Increment** - Target rate increment is how much the target rate changes with incremental changes on the main screen.
5. **Calibration Factor** - Input calibration factor based on experience here. I would still recommend a calibration test. But with an accurate calibration factor, one test should be enough to confirm. *(See "**Calibration Factor Chart**" in reference section.)*
6. **Add New Product**.
7. **Delete Product**.
8. **Cycle Product**.

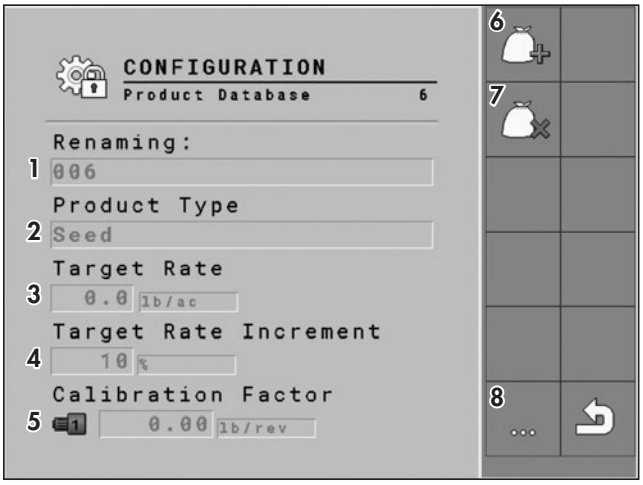

Console Settings Overview

Metering Unit Configuration Screen 1

1. **Target Rate** - Will auto populate with current product target rate.
2. **Calibration Factor** - Will auto populate with current product calibration factor.
3. **Deviation Tolerance** - The range the meter will consider acceptable before alarming.
4. **Pre-start**
5. **Section Control Delay** - Not required for PC80.
6. Opens next page of metering unit configuration.

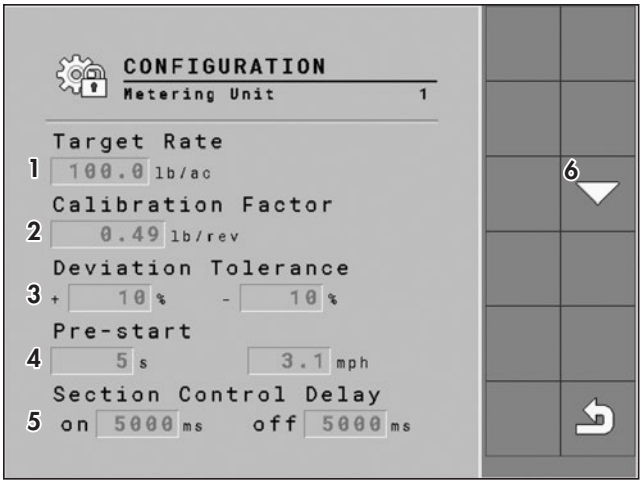

Metering Unit Configuration Screen 2

This screen will auto populate with values defined by the hopper material profile. However, they can be adjusted here on a temporary basis.

1. **PWM Resume** - Should always be "Yes". Impacts control systems.
2. **Calibration Flap** - Change depending on whether or not there is a calibration door sensor.
3. Opens previous page of metering unit configuration.

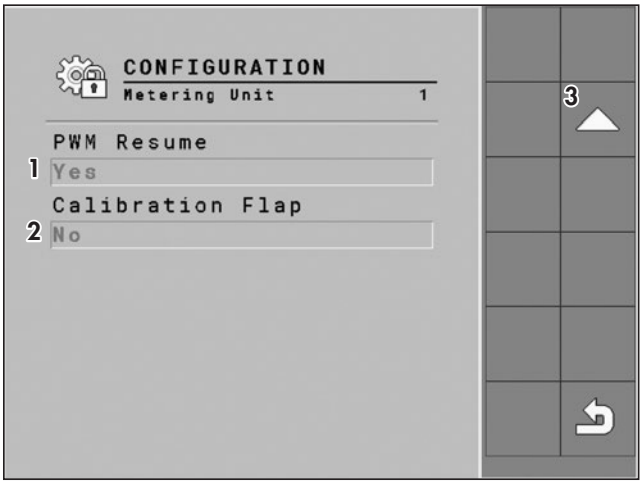

Console Settings Overview

Shoot Configuration Screen

1. **Working Width** - Set working width of the machine. This value influences target meter speeds. Used to calculate area coverage. Larger value means meter must spin faster to achieve rates.

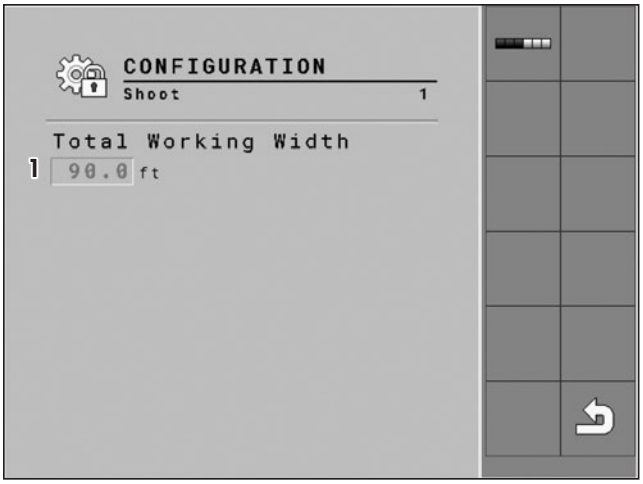

Fan Configuration Screen

1. **Min. Motor Speed** - Set minimum motor speed. This can be lowered or raised based on preference.
2. **Max. Motor Speed** - Set minimum motor speed. This can be lowered or raised based on preference.

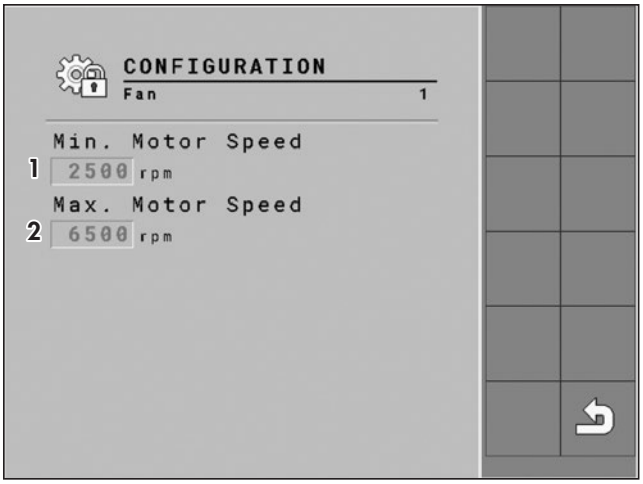

⚠ MAINTENANCE SAFETY

- Review the Operator's Manual and all safety items before working with, maintaining or operating the Pro-Cast and the implement it is mounted on.
- Lower to ground, stop engine, place all controls in neutral, set park brake and remove ignition key before servicing, adjusting, repairing, or unplugging.
- Keep hands, feet, clothing and hair away from all moving and/or rotating parts.
- Clear the area of bystanders, especially children, when carrying out any maintenance and repairs or making any adjustments.
- Be careful when working around or maintaining a high pressure hydraulic system. Wear the proper hand and eye protection when searching for a pin hole leak in a hose or fitting.
- Always relieve pressure before disconnecting or working on hydraulic system.

MAINTENANCE CHECKLIST

After reviewing the Maintenance and Hydraulic Safety Information, use the Maintenance Checklist provided for regular service intervals and keep a record of all scheduled maintenance:

(Initial break-in review.)

A. Before using:

1. Read Safety Info. & Operator's Manual.
2. Complete "Pre-Operation Checklist"
3. Check all Bolt Tightness.

B. After operating for **2 hours**:

1. Check all hardware. Tighten as required.
2. Check all hydraulic system connections. Tighten if any are leaking.

MAINTENANCE SCHEDULE

After operating for initial 2 hours & 8 hours:

1. Check all hardware. Tighten as required.
2. Check all hydraulic system connections. Tighten if any are leaking.

Daily - 8 Hours

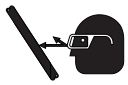

- Hydraulic Fluid Leaks
- Damaged Hoses
- Remove, inspect & clean rollers. Check pre-load when reassembling.



- Check wiring harnesses for visible damage.
- Check that external sensors (*meter motor & calibration door*) are clean, free of debris and not damaged.
- Clean any seed or chemical residue from meter body. Don't clean with high pressure washer.
- If machine is equipped with y-splitters in the distribution lines, inspect for damage and wear.
- Do not leave product in tank overnight.



Annually - 200 Hours

- Bolt Tightness.
- Inspect all distribution hoses for damage or wear.
- Inspect deflectors for damage or wear.
- Inspect wiring harnesses for damage.
- For machines equipped with y-splitters and restrictor nozzles (*select Strawmaster units*), inspect for damage or wear.

Before Storage

- Empty & clean tank
- Disassemble & clean metering unit
- Ensure distribution hoses aren't blocked.
- Plug hose ends.
- Cover fan intake.
- Inspect all components for damage or wear.

> ⚠ **IMPORTANT: Do NOT use high pressure washer around ECU** (*located under front of tank*) **or directly on metering unit.**

After Storage

- Inspect all components for damage or wear.
- Inspect meter rollers and check preload.
- Check fan operation.
- Run simulation before filling tank to check correct operation.

HARDWARE SPECIFICATIONS

Note: Unless stated otherwise, hardware is typically:
Hex, Plated GR5 UNC or P8.8 (metric)

TORQUE SPECIFICATIONS

TORQUE

Checking Bolt Torque

The tables below give correct torque values for various bolts and capscrews. Tighten all bolts to the torques specified in chart unless otherwise noted. Check the tightness of bolts periodically, using these bolt torque charts as a guide. Replace hardware with the same strength (Grade/Class) bolt.

IMPERIAL TORQUE SPECIFICATIONS

(Coarse Thread - based on "Zinc Plated" values)



Size	Grade 5	Grade 8
	lb.ft (*N.m*)	lb.ft (*N.m*)
1/4"	**7 (*10*)**	**10 (*14*)**
5/16"	15 (*20*)	20 (*28*)
3/8"	**25 (*35*)**	**35 (*50*)**
7/16"	40 (*55*)	60 (*80*)
1/2"	**65 (*90*)**	**90 (*120*)**
9/16"	90 (*125*)	130 (*175*)
5/8"	**130 (*175*)**	**180 (*245*)**
3/4"	230 (*310*)	320 (*435*)
7/8"	**365 (*495*)**	**515 (*700*)**
1"	550 (*745*)	770 (*1050*)
1-1/8"	**675 (*915*)**	**1095 (*1485*)**
1-1/4"	950 (*1290*)	1545 (*2095*)
1-3/8"	**1250 (*1695*)**	**2025 (*2745*)**
1-1/2"	1650 (*2245*)	2690 (*3645*)

METRIC TORQUE SPECIFICATIONS

(Coarse Thread - based on "Zinc Plated" values)



Size	Class 8.8	Class 10.9
	lb.ft (*N.m*)	lb.ft (*N.m*)
M6	**7 (*10*)**	**10 (*14*)**
M8	16 (*22*)	23 (*31*)
M10	**30 (*42*)**	**45 (*60*)**
M12	55 (*75*)	80 (*108*)
M14	**90 (*120*)**	**125 (*170*)**
M16	135 (*185*)	195 (*265*)
M18	**190 (*255*)**	**270 (*365*)**
M20	265 (*360*)	380 (*515*)
M22	**365 (*495*)**	**520 (*705*)**
M24	460 (*625*)	660 (*895*)
M27	**675 (*915*)**	**970 (*1315*)**
M30	915 (*1240*)	1310 (*1780*)
M33	**1250 (*1695*)**	**1785 (*2420*)**
M36	1600 (*2175*)	2290 (*3110*)

HYDRAULIC SAFETY

- Make sure that all components in the hydraulic system are kept in good condition and are clean.
- Replace any worn, cut, abraded, flattened or crimped hoses and metal lines.
- Do not attempt any makeshift repairs to the hydraulic lines, fittings or hoses by using tape, clamps or cements. The hydraulic system operates under extremely high-pressure. Such repairs will fail suddenly and create a hazardous and unsafe condition.
- Wear proper hand and eye protection when searching for a high-pressure hydraulic leak. Use a piece of wood or cardboard as a backstop instead of hands to isolate and identify a leak.

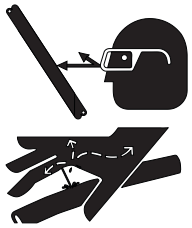

- If injured by a concentrated high-pressure stream of hydraulic fluid, seek medical attention immediately. Serious infection or toxic reaction can develop from hydraulic fluid piercing the skin surface.
- Before applying pressure to the system, make sure all components are tight and that lines, hoses and couplings are not damaged.

HYDRAULIC HOSE SPECIFICATIONS

Note: Unless otherwise stated, Hydraulic Hoses are either 3/8 or 1/2 with ORF female swivel ends.

HYDRAULIC HOSE INSTALLATION TIPS

The following tips are to help you identify some possible problem areas in the installation of hydraulic hoses.

1. Installation should be completed in a clean environment clear of dust and contaminants. Hoses and fittings should be capped if not installed.
2. Ensure hoses are not twisted during installation as this may weaken the hose. Also, the pressure in a twisted hose may loosen fittings or connections.
3. Allow sufficient bend radius in hoses when installing to prevent lines from collapsing and flow becoming restricted.
4. When installing hoses in an area of movement or flexing, allow enough free length for motion and to ensure fitting connections are not stressed.
5. Ensure hoses are properly clamped and secured in position after routing is complete to provide a cleaner installation and prevent possible damage or hazards.

HYDRAULIC FITTING INSTALLATION

The following info is to help you identify and properly install some of our standard hydraulic fittings.

SAE (JIC) 37° Flare

JIC fittings - Metal-to-metal sealing type fittings featuring a 37° flare (angle of sealing surface) and straight UNF (Unified National Fine) Threads.

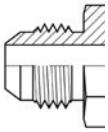

(Lubricated Values) Dash	Thread Size	Torque - lb.ft (*N.m*)	
-4	7/16 - 20	9-12	(12-16)
-6	9/16 - 18	14-20	(*19-27*)
-8	3/4 - 16	27-39	(*37-53*)
-10	7/8 - 14	36-63	(*50-85*)
-12	1-1/16 - 12	65-88	(*90-119*)

Tightening JIC 37° Flare Type Fittings

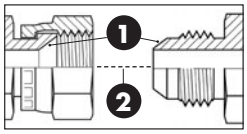

1. Check flare and flare seat for defects that might cause leakage.
2. Align fittings before tightening. Lubricate connections & hand tighten swivel nut until snug.
3. Using two wrenches, torque to values shown in table.

Alternate Installation Method

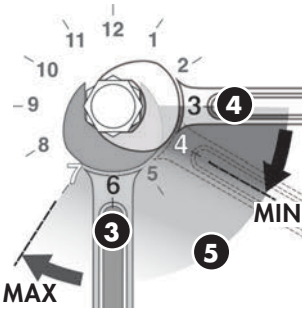

3. Using two wrenches. Place one wrench on the fixed connector body at a clock position of **6** o'clock.
4. Place the second wrench on the second connection as close to the **3** o'clock position as possible.
5. Tighten by rotating the second connection firmly to at least the **4** o'clock position, but no more than the **7** o'clock position. Typically, the larger the fitting size the less rotation required.

ORFS (O-Ring Face Seal)

ORFS fittings use an O-ring compression method to seal. This method offers a high level of sealing along with good vibration resistance. Male fittings include an O-ring located in a groove on the flat face. Female fittings feature a flat face and UNF straight threaded swivel nut.

The **Torque** method is recommended for ORFS installation.

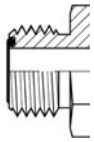

Dash	Thread Size	Torque - lb.ft (*N.m*)	
-4	9/16 - 18	18	(*25*)
-6	11/16 - 16	30	(*40*)
-8	13/16 - 16	40	(*55*)
-10	1 - 14	60	(*80*)
-12	1-3/16 - 12	85	(*115*)

Tightening ORFS (O-Ring Face Seal) Fittings

1. Inspect components and ensure the O-Ring seal is undamaged and properly installed in the groove of the face seal. Replacing the O-Ring may be necessary.
2. Align, thread into place and hand tighten.
3. Tighten to proper torque from the table shown above.

Note: A **DASH** size refers to a diameter of a hose (*inside*) or of a tube (*outside*) measured in 1/16″ increments.
For example, a ***Hose*** specified as *dash* **8** or **-8** would have an **inside** diameter of **8***/16″* or **1/2″**.
Alternatively, a ***Tube*** specified as *dash* **8** or **-8** would have an ***outside*** diameter of **8***/16″* or **1/2″**.

ORB (O-Ring Boss)

Male ORB fittings have straight UNF threads, a sealing face and an O-ring. The female fittings are generally found in the ports of machines and feature straight threads, a machined surface, and a chamfer to accept the O-ring. Sealing is achieved through the compression of the male O-ring against the chamfered sealing face of the female fitting.

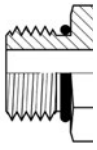

(Lubricated Values) Dash	Thread Size	Torque Non-Adjustable lb.ft (*N.m*)	Torque Adjustable lb.ft (*N.m*)
-4	7/16 - 20	30 (*40*)	15 (*20*)
-6	9/16 - 18	35 (*46*)	35 (*46*)
-8	3/4 - 16	60 (*80*)	60 (*80*)
-10	7/8 - 14	100 (*135*)	100 (*135*)
-12	1-1/16 - 12	135 (*185*)	135 (*185*)

Tightening ORB (O-Ring Boss) Fittings

Non-adjustable Port End Assembly

1. Inspect the components to ensure that male and female threads and sealing surfaces are free of nicks, burrs, scratches, or any foreign material.
2. Ensure O-Ring seal is properly installed and undamaged.
3. Lubricate threads and O-ring to help the O-ring slide past the port entrance corner and avoid damaging it.
4. Screw the fitting into position tighten to proper torque value from the table shown above.

Adjustable Port End Assembly

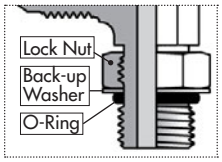

1. Inspect the components to ensure male & female threads and sealing surfaces are free of nicks, burrs, scratches, or any foreign material.
2. Ensure O-Ring seal is properly installed and undamaged.
3. Lubricate threads and O-ring to help the O-ring slide smoothly into the port and avoid damage.
4. Loosen back the lock nut as far as possible. Make sure back-up washer is not loose and is pushed up as far as possible.
5. Screw the fitting into port until the back-up washer or the retaining ring contacts face of the port. Light wrenching may be necessary. Over tightening may damage washer.
6. To align the end of the fitting to accept incoming tube or hose assembly, unscrew the fitting by the required amount, but not more than one full turn.
7. Using two wrenches, hold the fitting in desired position and tighten the locknut to the proper torque value from the table located above.
8. Inspect to ensure that O-ring is not pinched and that washer is seated flat on the face of the port.

CLEANING OUT METER

To maintain optimal performance, the meter should be cleaned daily and examined for wear.

⚠ **IMPORTANT:** Wear proper PPE. *(For safety when dealing with chemicals, pinch points, sharp edges, or other hazards.)*

Cleaning Procedure:

1. Remove side plate from meter
2. Pull out foam, plastic spacers, stainless spacers, and rollers. Keep in order.
3. Clean the meter and meter components
4. Replace meter components.

   Note: The recommended torque for the meter wheel drive screw is **7.4 lb·ft (10 N.m)**.
5. Ensure correct amount of compression is placed on the meter rollers. When all spacers and rollers are installed, push all components in so there are no gaps and allow the foam seals to fully expand. The last (large) foam spring should protrude from the meter housing by 2-3mm. When compressed by end plate, this will achieve the correct compression on the rollers. To adjust compression, add or remove the supplied stainless steel plates.

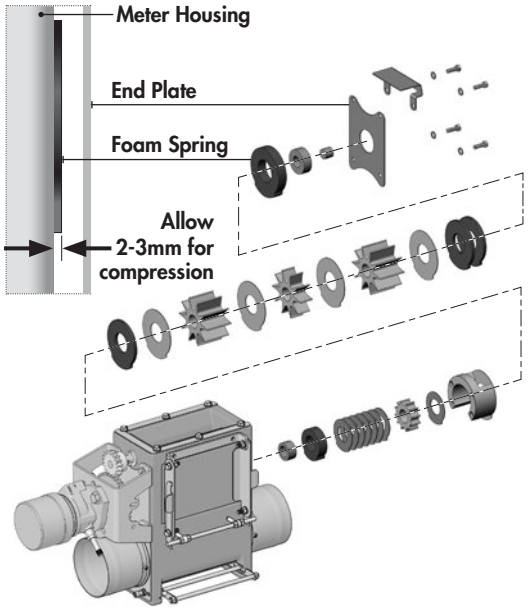

Note: If installing the precision roller with the small foam spring, ensure that the foam protrudes 1-2mm past the white plastic housing for that roller.

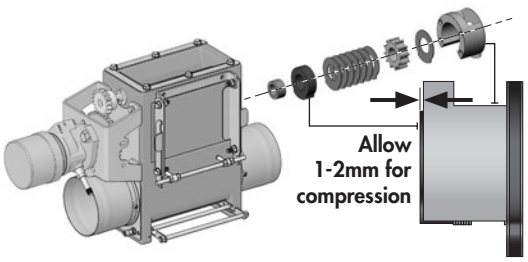

6. Clean meter before storage by carefully blowing out loose material debris and wiping down all internal components. Do not use a high pressure washer on metering unit.

REPLACING ROLLERS

Use the same method as cleaning out the meter to remove damaged or worn rollers. Replace the old rollers with news ones and remember to check the roller compression before reinstalling end plate. The number of spacers in the meter may need to be adjusted to account of the difference between the width of worn rollers and new rollers.

CLEANING OUT TANK

- Clean out the tank before storage.
- Don't leave product in tank overnight if it can be avoided.
- Always follow all chemical safety instructions and wear proper PPE when cleaning out the tank.

CLEARING A PLUGGED LINE

The best way to clear a plugged line is to use compressed air. Otherwise, unhook the hose and work the product out. Always follow all chemical safety instructions and wear proper PPE when cleaning out lines that have been used with chemicals.

Note: *When storing the machine for long periods of time, plug the ends of the air lines to prevent moisture build-up.*

REPLACING DEFLECTORS

When purchasing your machine we recommend adding the stainless steel wear plate to the deflectors. This wearable part is much easier to change out than disconnecting all hoses and changing full deflector sections.

Changing stainless wear plates, is as simple as removing the single carriage bolt that secures it and replacing the wear plate. To replace the full deflector section, first disconnect all the distribution hoses and then remove the fasteners that hold the deflectors in place.

REPLACING DOMES

We recommend that the clear dome on the distribution head be changed when it is becoming difficult to see the product through it. This is as simple as removing the four bolts that secure it to the distribution head assembly, removing it and fastening the new dome in place.

STORAGE

The Pro-Cast should be carefully prepared for storage to ensure that all dirt, mud, debris and moisture has been removed.

⚠ **IMPORTANT:** Wear proper PPE. *(For safety when dealing with chemicals, pinch points, sharp edges, or other hazards.)*

Follow this procedure when preparing to store:

1. Do not store tank with product inside.
2. Plug hoses to prevent moisture from getting inside.
3. Clean the machine thoroughly to remove all dirt, mud, debris or residue.

   ⚠ **IMPORTANT: Do NOT use high pressure washer around ECU** (*located under front of tank*) **or directly on metering unit.**

4. Inspect all parts to see if anything has become entangled in them. Remove entangled material.
5. Inspect all hydraulic hoses, fittings, lines and couplers. Tighten any loose fittings. Replace any hose that is badly cut, nicked or abraded or is separating from the crimped end of the fitting.

   Note: *When storing the machine for long periods of time, plug the ends of the air lines and cover the fan intake to prevent moisture build-up.*

6. Touch up all paint nicks and scratches to prevent rusting.

Troubleshooting

Troubleshooting Overview

In the following sections, we have listed some of the problems, causes, and solutions that you may encounter. If you encounter a problem that is difficult to solve, even after having read through this troubleshooting section, please call your local dealer or distributor. Before you call, have this manual and the serial number from your unit ready.

CONTROL SYSTEM / ALARMS

SYMPTOM	PROBLEM	SOLUTION
Universal Terminal will not load user interface.	The ECU needs time to load the object pool.	The first time that the machine is connected to a tractor, it's going to take longer than normal to load. If you see this symbol  it means that the object pool is loading. When you see the floppy disc symbol, it means that the user interface is loading.
Alarm - Low/high voltage warning.	The ISOBUS cable does not have a good connection.	This is most likely where the ISOBUS cable plugs into the tractor. Remove the cable, check for debris, clean if necessary and reconnect.
Alarm - Fan rotates too slow/fast.	The fan is operating outside of its recommended speed range.	Adjust the hydraulic oil flow to the SCV that is feeding the Pro-Cast. If this method doesn't bring the operating speed into the required range, adjustments need to be made on the hydraulic manifold under the front hood. There are two adjustments, the knob adjusts the amount of flow that is sent to the fan how much excess is dumped. The set screw adjuster (under a cap) controls the split between the meter and the fan upstream of the knob adjustment. Ensure the lock nut is backed-off before trying to make adjustments.
Alarm - Meter can't maintain target rate.	Speed sensor not picking up target.	Sensor has moved out of sensing range. Adjust sensor.
		Debris between sensor and target. Clean off target and sensor.
	Metering unit not spinning.	Hydraulic fluid not reaching and driving the metering unit hydraulic motor. Ensure that appropriate SCV is activated and hydraulic manifold is properly adjusted.
	Metering unit pulsing or spinning intermittently.	The meter is trying to spin too slow based on the calibration factor and the roller(s) engaged. Recalibrate with less rollers engaged or a smaller roller engaged.
	Bad connection or damage to solenoid wires on hydraulic manifold.	Unplug and clean connectors on "P7 FAN HS" & "P8 METER 1 PWM" wires that connect to hydraulic manifold. Check wires for damage, repair or replace as necessary.
Alarm - Target Speed Out of Range.	Meter needs to rotate faster than maximum RPM setting in order to hit target rate.	The meter is trying to spin too fast based on the calibration factor and the number of rollers engaged. Engage more rollers and recalibrate or drop target rate.
	Meter needs to rotate slower than minimum RPM setting in order to hit target rate.	The meter is trying to spin too slow based on the calibration factor and the number of rollers engaged. Disengage some rollers and recalibrate or increase target rate.
Alarm - Hopper Level Low.	Product in the tank is below the low level tank sensor.	Clear the message on the screen and prepare to refill the tank.
	The alarm is being displayed when the tank is full.	The sensor connector has been pinned with the opposite polarity than required. This can be rectified in the control setting rather than rewiring the sensor, contact Degelman for assistance.
Alarm - Calibration Door Open.	Calibration door on metering unit left open after calibrating.	Close the calibration door before starting the machine.
	The alarm is being displayed when the calibration door is closed.	The sensor connector has been pinned with the opposite polarity than required. This can be rectified in the control setting rather than rewiring the sensor, contact Degelman for assistance.

Troubleshooting

LEAKING ISSUES

SYMPTOM	PROBLEM	SOLUTION
Leaking out of meter side door.	Not enough side door tension.	Check that clamp bar is not bent. Straighten or replace if it is.
		Remove clamp bar and screw in rod ends to increase tension. Re-install clamp bar.
	Door alightment off.	Loosen side door bolts and adjust.
	Really fine product still finding a way through the side door.	Add thin adhesive foam strips along top and bottom of meter housing opening.
Leaking along meter shaft.	Breathers not installed or incorrectly installed.	Ensure all breathers are installed in their correct locations with good all around interference fit. Refer to "Roller clean out and set-up procedure".
Leaking around quick dump or tank level sensor.	Gasket not sealing properly.	Ensure gasket is installed and not damaged. Tighten bolts to improve engagement. Clean out interferences if necessary.
Leaking through meter rollers.	Disengaged roller drive screw holes not facing perpendicuar to meter side door.	Drive screw holes on disengaged rollers can let product pass through if they are not perpendicular to the meter side door. Re-position as required.
	Debris wedged between the rollers.	Can happen over time with use. Meter should be cleaned regularly to avoid issues. Remove rollers an clean out before reinstalling.
	Gaps between the rollers.	Can result when the roller compression is not high enough. Add more compression to the roller by adding an additional stainless spacer plate. Foam spring should protrude 2-3mm from side of meter housing.
	Roller flaps are defromed. *(curved)*	Can result when the roller compression is too high. This causes excess friction on the sides of the fin causing the deformation. Remove stainless spacers as required. Foam spring should protrude 2-3mm from side of meter housing.
	Damaged or worn rollers.	Over time, rollers will become worn or damaged with use. Replace as required.
Leaking through calibration door.	Calibration door not sealing with bottom of meter housing.	If there is product remaining in the tank, install the shut-off slide before opening. Inspect area for trapped debris or damage. Clean and repair as necessary.
Leaking through shut-off slide gap.	Shut-off slide plug not installed.	Install the shut-off plug, using the wings nuts to secure.

METERING ISSUES

SYMPTOM	PROBLEM	SOLUTION
Meter spinning when not engaged.	Hydraulic flow not set properly.	Refer to Fan Speed *(Hyd Block Adjustment)* section under "Operation - Settings and Adjustments".
Meter spinning with no RPM displayed.	Meter speed sensor not receiving any input.	Ensure the sensor is connected.
		Ensure the wiring harness is not damaged.
		Ensure there is no debris blocking the sensor's path.
		Ensure the speed sesnor is the correct distance from the target gear. Should be set 2mm from tip of gear teeth. Too far an it will not receive input. Too close and it may not disengage between gear teeth.

METERING ISSUES CONTINUED

SYMPTOM	PROBLEM	SOLUTION
Unstable meter rotation.	Meter speed sensor not receiving input from all gear teeth.	Ensure the sensor light turns off and on for each tooth as it rotates around the gear. If not, reset distance to correct.
	Meter target speed too low.	Due to a combination of tractor speed, machine width, target rate and calibration factor, the target speed of the roller to achieve the desired rate may be too slow. The hydraulic flow will be reduced until it can no longer turn the meter motor, dropping the meter speed to "0". The control system will try to correct by increasing hydraulic flow leading to a meter speed too high for the desired rate. And the cycle continues. To correct this, increase the target speed of the meter by increasing tractor speed, by reducing the calibration factor (by using fewer rollers), or by increasing the appliaction rate.
Meter not outputing product.	Shut-off slide still installed.	Ensure the shut-off side is removed. This is a common after cleaning out rollers or adjusting roller compression.
	No rollers engaged.	Ensure you have engaged the required rollers.
	Tank empty.	Ensure product is in the tank.
	Bridging.	Refer to the the "bridging" section below.
Meter not spinning.	Master switch is turned off.	After turning the fan on, ensure the master switch (top right of screen) is turned on.
	Speed input setting is wrong.	Check your speed settings to ensure you are using the correct speed input *(ie. GPS, Wheel speed, Simulation)*.
	Hydraulics not active.	Make sure your hydraulics are engaged and connected.
	Not enough hydraulic flow to the meter.	Refer to Fan Speed *(Hyd Block Adjustment)* section under "Operation - Settings and Adjustments". Adjust more hydraulic flow to the meter.
Bridging. *(Bridging is the creation of a clump or solid mass of product that can slow or prevent the ability of the product to move. When bridging occurs, the solution is to try and determine the cause and also break up the solid masses.)*	Disengaged roller drive screw holes not perpendicular to the meter side door. *(Air passing through the meter and up into the tank).*	If any holes are facing down to the pressure side of the rollers, the air will pass through and along the shaft. Adjust as required.
	Debris wedged between the rollers. *(Air passing through the meter and up into the tank)*	Clean out rollers. Refer to the meter clean out procedure in "Operation - Settings & Adjustments".
	Roller compression too high or too low. *(Air passing through the meter and up into the tank)*	Either condition can lead to air passing through the meter. Refer to the meter clean out procedure in the "Operation - Settings & Adjustments" for meter compression instructions. Foam spring should protrude from meter housing by 2-3mm.
	Foam breathers clogged. *(Air passing through the meter and up into the tank).*	The foam breather relieve excessive air pressure in the roller housing and provides a way for to escape. As these get clogged, the air pressure can build up leading to bridging. Clean out the open cell foam breathers regularly.
	Air speed too high.	Refer to recommended fan speed chart in "Operation - Settings & Adjustments".
		If still a problem, trial in simulation mode and reduce air speed gradually until problem is alleviated. Ensure the air speed remains high enough to prevent plugging.
	Product damp.	Ensure product in tank is dry for good flow characteristics.
	Product clumping.	Ensure product in tank is free from clumps which increase the instance of bridging.
Plugged Hoses.	Air speed to slow.	Turn up fan speed to prevent plugging. Higher fan speeds required based on seed weight and rate. *(Refer to fan speed chart in "Operation - Settings and Adjustments")*
	Moisture in lines causes product to stick.	Use hose caps in off season to prevent excessive moisture from getting into lines.
		Run fan before use to clear out lines of excess moisture. Visually verify if there are reasons to expect increased moisture conditions.
	Wet product.	Wet product can clump in lines. Ensure your product is dry.

Pro-Cast Component Overview

Component Overview

(replacement part)
290131 - Dome (1)



Distribution Manifold
(Size varies, refer to product specific installation kit)

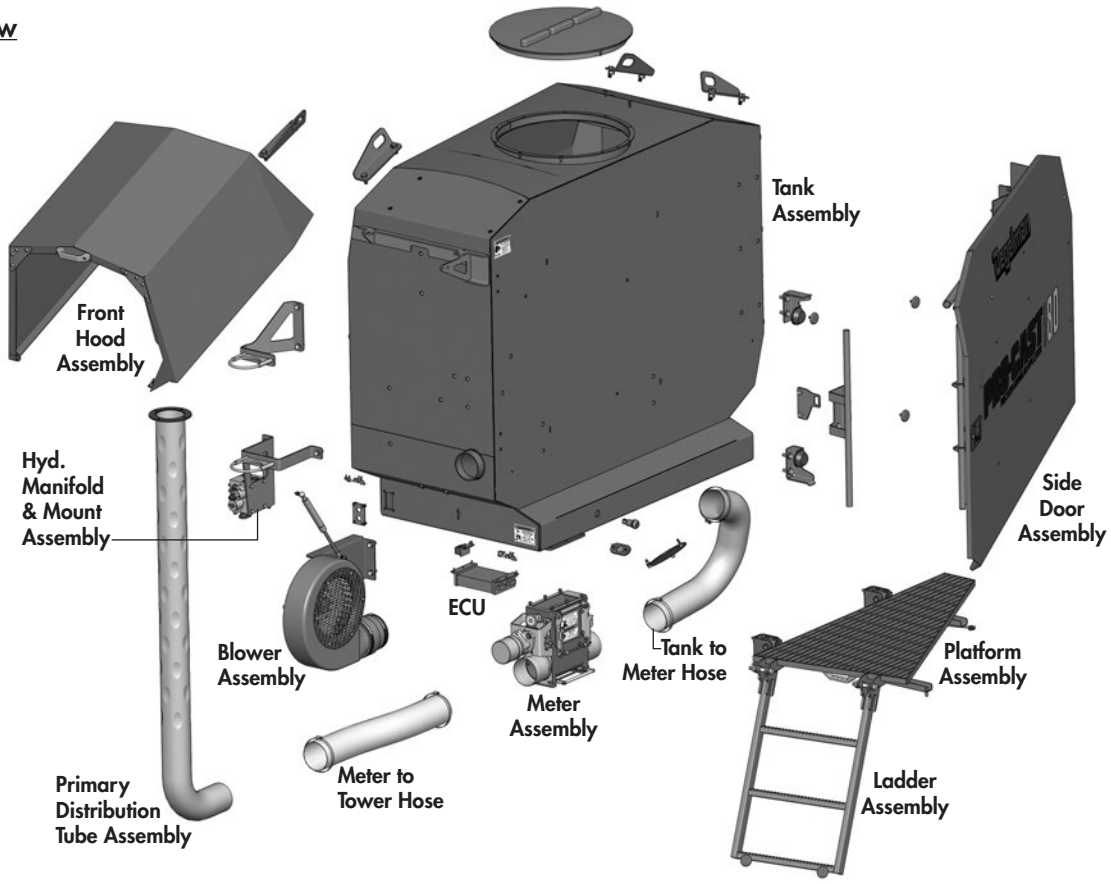

Front Hood Component Overview

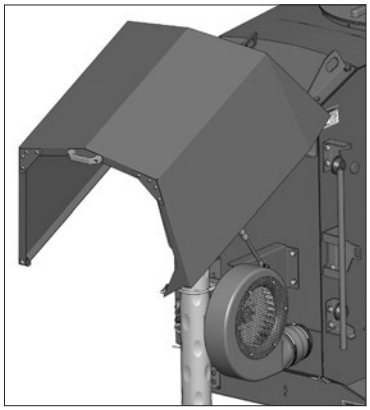

118644 - Bolt, 3/8 x 3 GR8 (4)
118511 - Flat Washer, 3/8 (8)
290116 - Hinge Block Plate (2)
290351 - Clamp Block (2)
118417 - Lock Nut, 3/8 (4)



118483 - Lock Nut, 1/4 - Unitorque (2)
118541 - Flat Washer, 1/4 SAE (4)
118123 - Bolt, 1/4 x 1 (2)

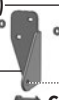

290196 - Locking Lug Plate (1)
Pin Storage
118929 - Lock Pin, 3/8 (1)

290369 - Gas Spring (1)
(comes with)
117597 - Lock Nut, M8 (2)



118417 - Lock Nut, 3/8 (8)
118511 - Flat Washer, 3/8 (8)
290161 - Gusset Plate, Corner (2)
117631 - Capscrew, 3/8 x 1 (8)



117597 - Lock Nut, M8 (2)
117598 - Flat Washer, M8 (2)
290160 - Gusset Plate, Handle (1)
133092 - Handle, Plastic (1)
133093 - Capscrew, M8 x 1.25 x 30mm (2)



290364 - Bumper, 1 (2)
117536 - Lock Nut, 3/8 GRF, Nyl Flange (2)

290105 - Front Hood Assembly (1)
(Previous: SN before PC1054)
290100 - Front Hood Assembly (1)

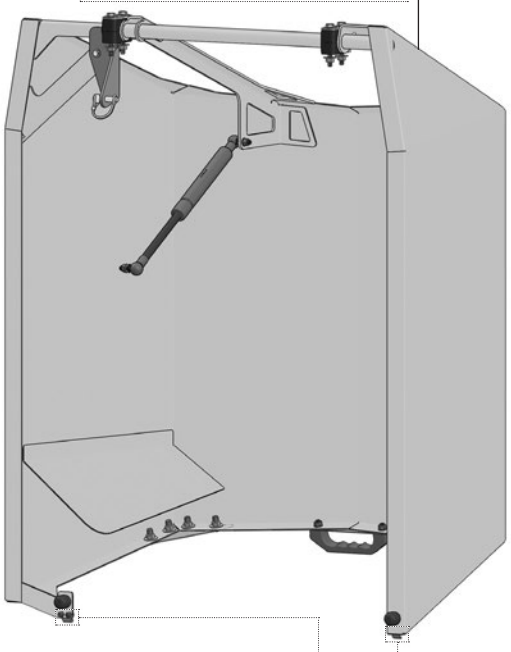

290357 - Latch Bracket (2)
117325 - Nut, Nylock (2)
117324 - Screw, #2 Phillips (2)



Tank Components

Tank Component Overview

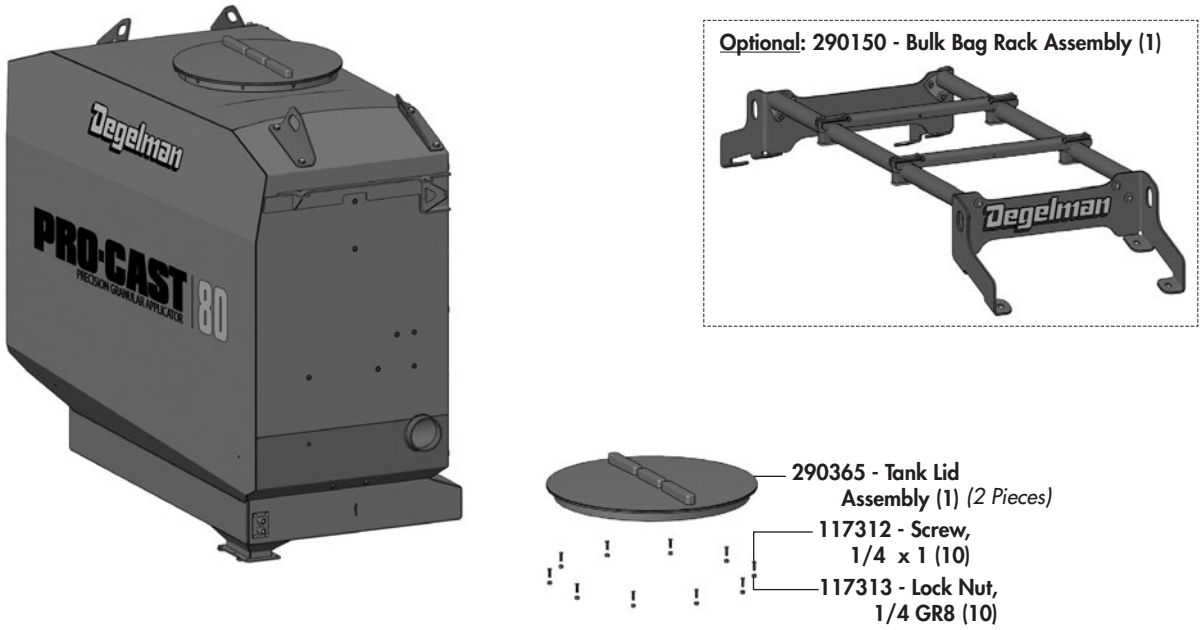

Fan & Fan Hose Components

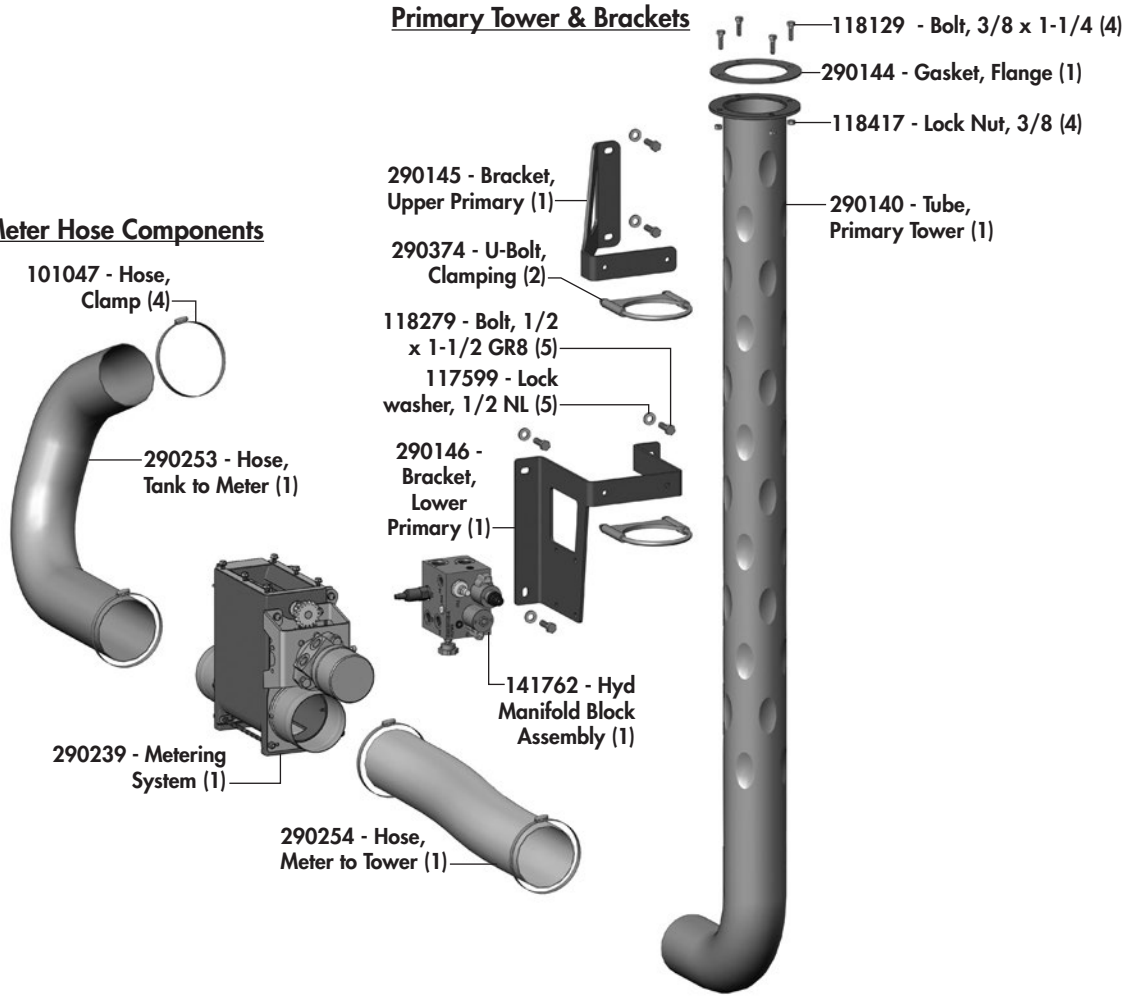

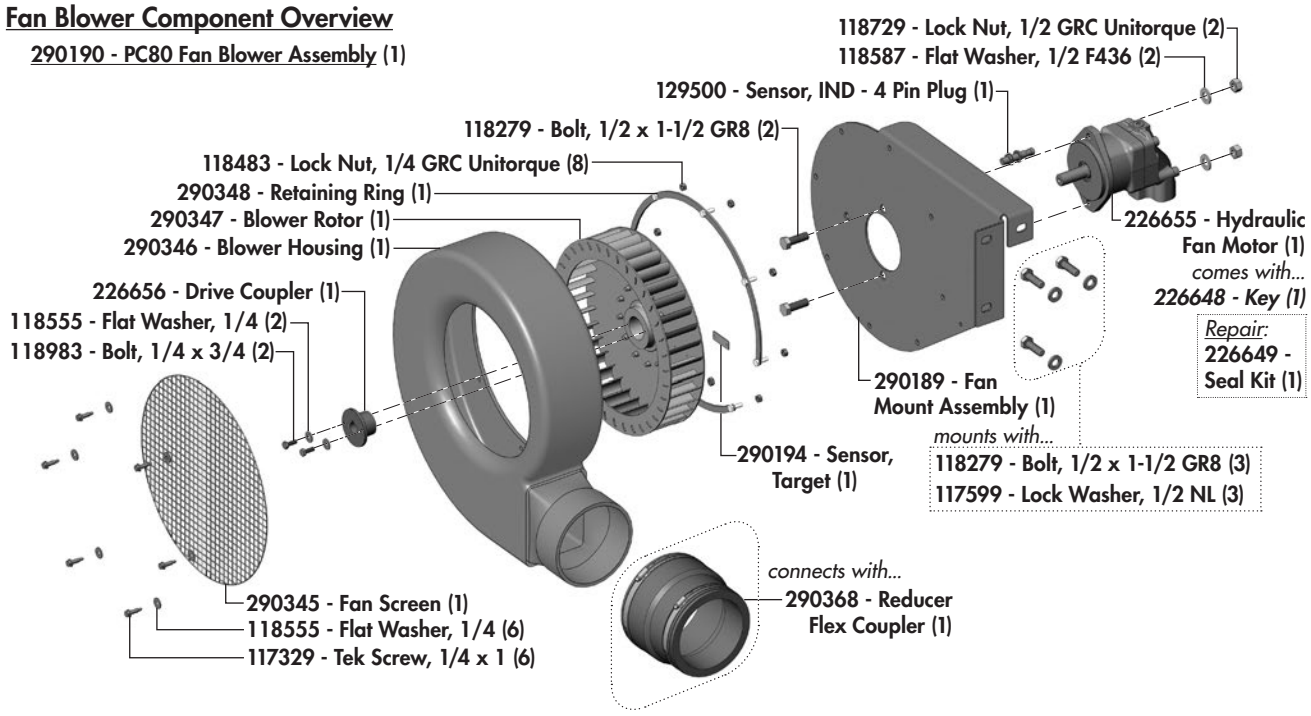

Meter Components

Meter Component Overview

290239 - Metering System (1)

226666 - Hydraulic Meter Motor (1)
*comes with... **119031 - Key (1)***

Repair: **226654 - Seal Kit (1)**

117606 - Bolt, 1/2 x 1-3/4 GR8 (2)

118587 - Flat Washer, 1/2 F436 (4)

118729 - Lock Nut, 1/2 GRC Unitorque (2)

290240 - Pro-Cast, Metering System Assembly (1)

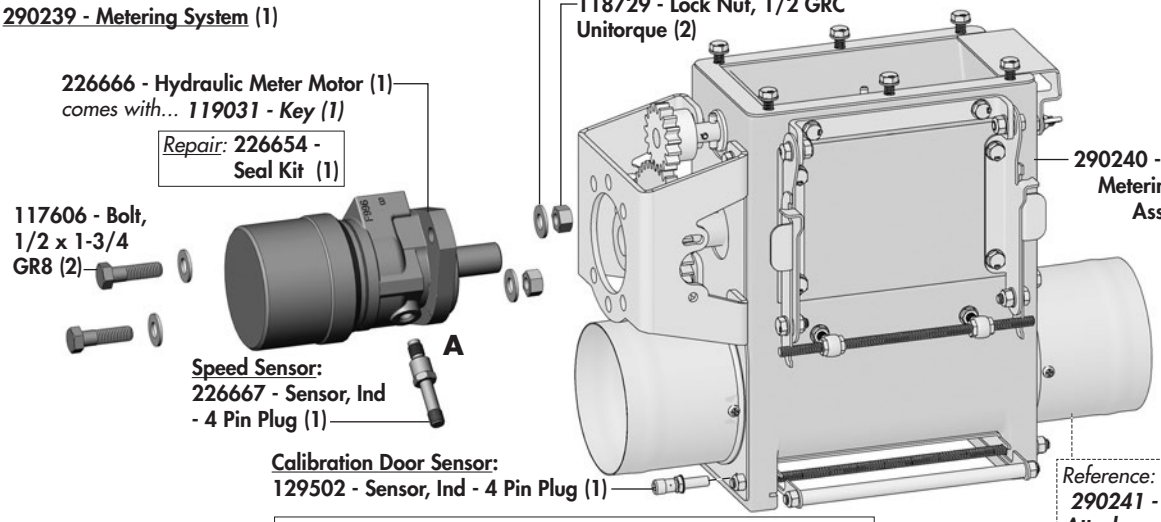

Speed Sensor:
226667 - Sensor, Ind - 4 Pin Plug (1)

Calibration Door Sensor:
129502 - Sensor, Ind - 4 Pin Plug (1)

*Door sensor distance is set by fully threading in sensor until it hits target, unscrew sensor one complete rotation (=**1mm**), then hold distance and secure into position with lock washer and nut.*

Reference:
290241 - Meter Hose Attachment Nozzle (2)
117315 - Screw, #10 x 5/8 (4)

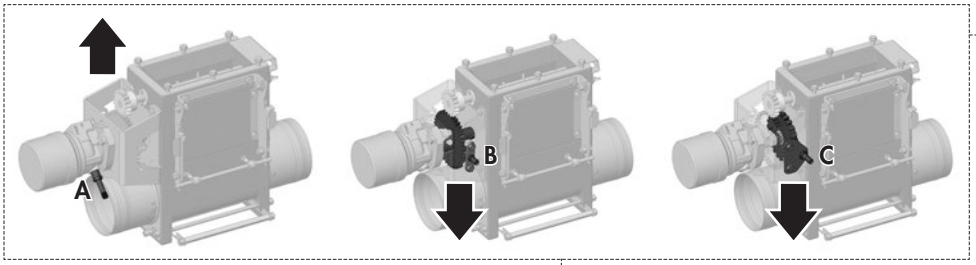

Sensor Identification:
A - *Sensor* **226667**
(Installs directly into motor.)

B - *Sensor* **129502**
(Aligned to stainless gear.)

C - *Sensor* **129500**
(Aligned with split, square-tooth gear.)

Alternate Motor & Sensor Mounting Components

IMPORTANT: *Specific sensors are used with specific motor and sensor mount installation locations. Use the identification information shown above to help determine the specific sensor part number required for your particular Pro-Cast model motor. New motor 226666 is used for all replacement and Degelman service should be contacted for proper updates to ECU settings if replacing from the previous 226665 motor model.*

226665 - Hydraulic Meter Motor (1)
comes with...
119031 - Key (1)

Repair: **226654 - Seal Kit (1)**

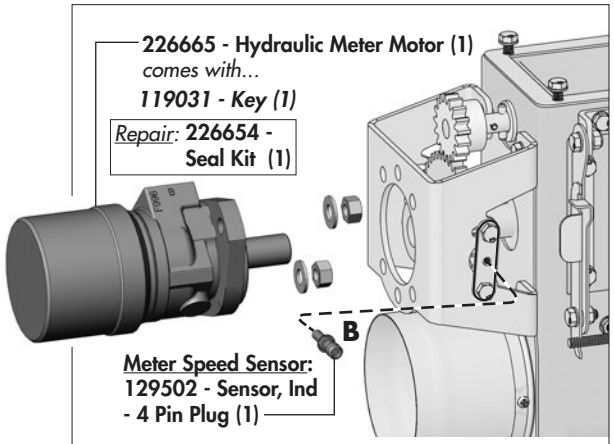

Meter Speed Sensor:
129502 - Sensor, Ind - 4 Pin Plug (1)

*Sensor distance is set by fully threading in sensor until it hits target, unscrew sensor one complete rotation (=**1mm**), then hold distance and secure into position with lock washer and nut.*

290264 - Meter Encoder Target Assembly (1) comes with...

117390 - Bolt, SHCS 1/4 x 3/4 (2)

290265 - Target, Bored Half (1)

290269 - Target, Tapped Half (1)
(shown below)

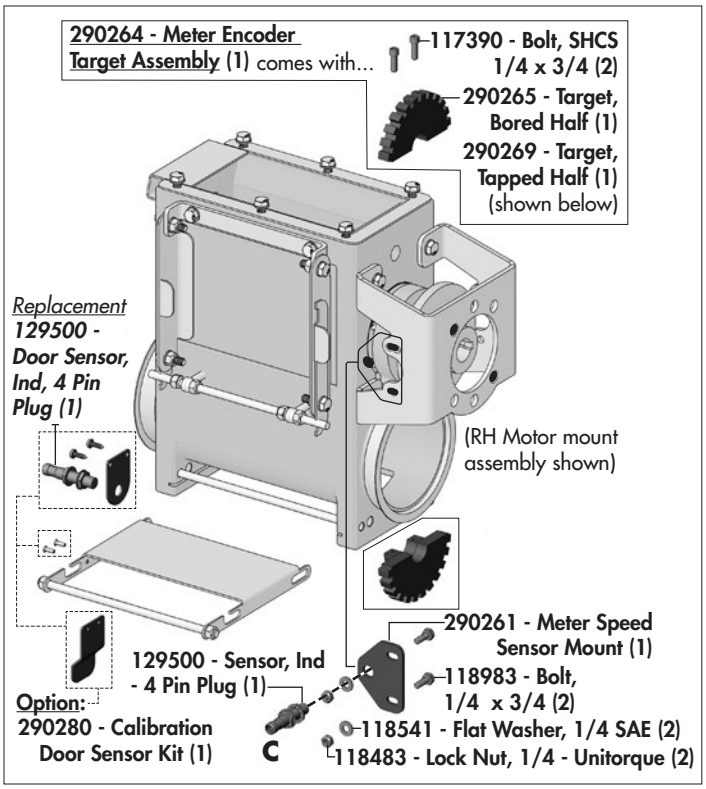

Replacement ***129500 - Door Sensor, Ind, 4 Pin Plug (1)***

(RH Motor mount assembly shown)

290261 - Meter Speed Sensor Mount (1)

118983 - Bolt, 1/4 x 3/4 (2)

118541 - Flat Washer, 1/4 SAE (2)

118483 - Lock Nut, 1/4 - Unitorque (2)

129500 - Sensor, Ind - 4 Pin Plug (1)

Option:
290280 - Calibration Door Sensor Kit (1)

Meter Components

Internal Metering Component Overview

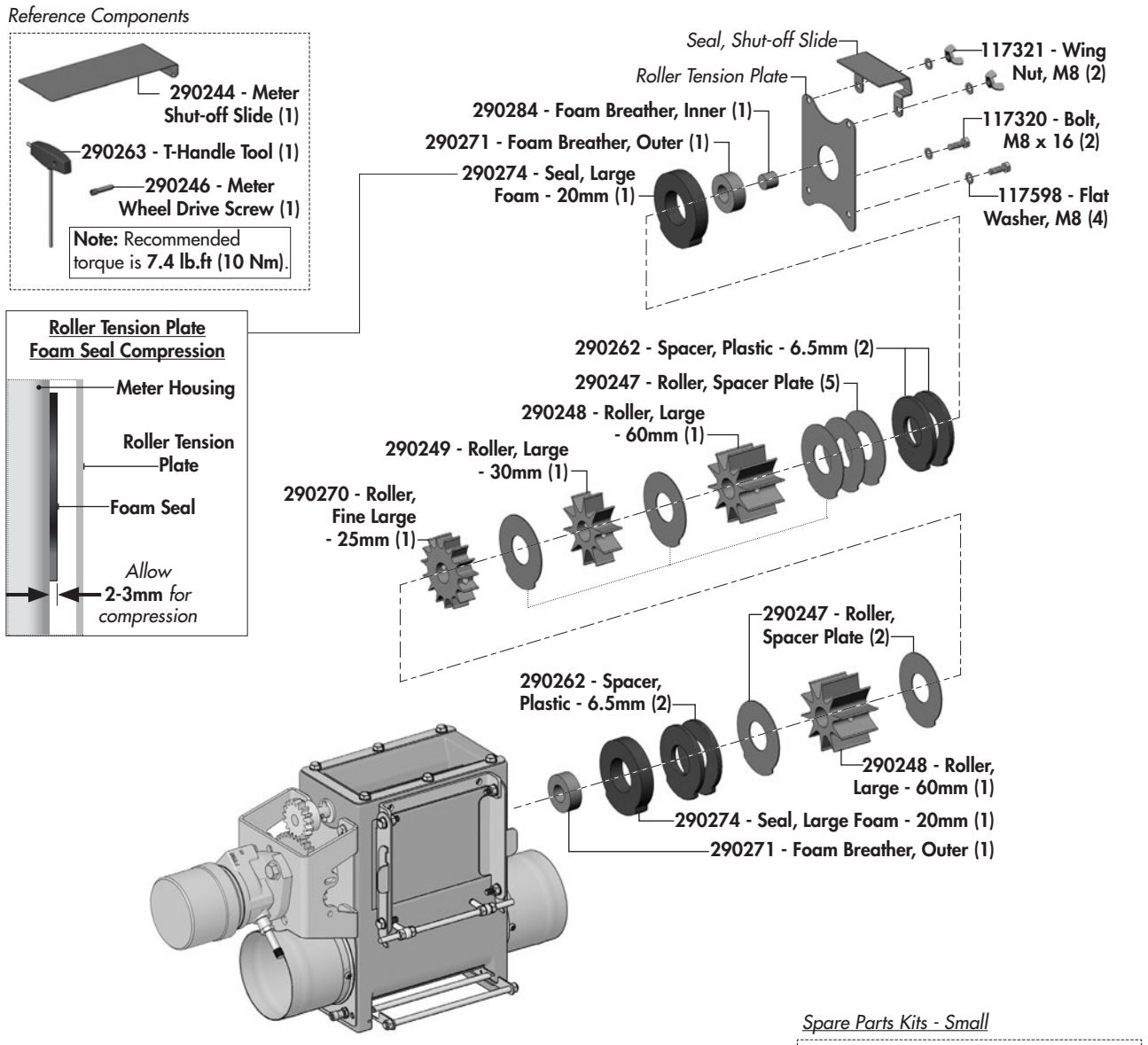

Spare Parts Kits - Small

290517 - Meter Parts Bag - Small (1)
- 290284 - Foam Breather, Inner (1)
- 290271 - Foam Breather, Outer (1)
- 290246 - Meter Wheel Drive Screw (1)
- 290274 - Seal, Large Foam - 20mm (1)
- 290247 - Roller, Spacer Plate (3)
- 290262 - Spacer, Plastic - 6.5mm (2)

Precision Roller Component Overview

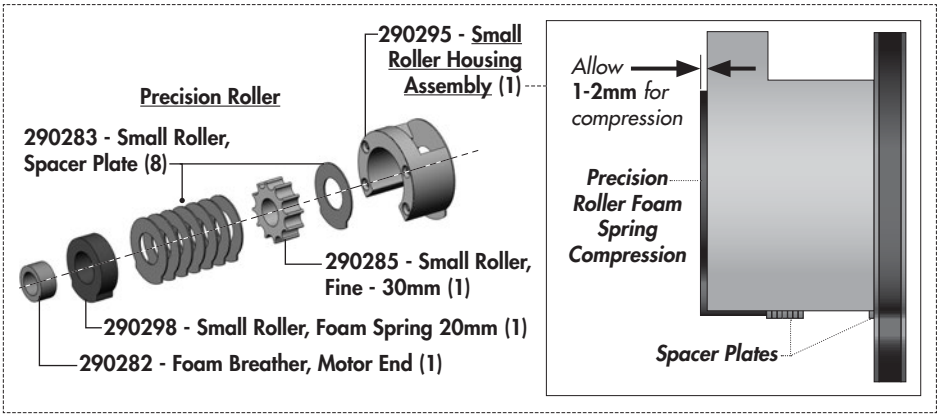

Spare Parts Kits - Large

290514 - Meter Parts Bag - Large (1)
- 290284 - Foam Breather, Inner (1)
- 290271 - Foam Breather, Outer (2)
- 290246 - Meter Wheel Drive Screw (4)
- 290274 - Seal, Large Foam - 20mm (2)
- 290247 - Roller, Spacer Plate (7)
- 290262 - Spacer, Plastic - 6.5mm (4)

Platform Components

Platform Component Overview

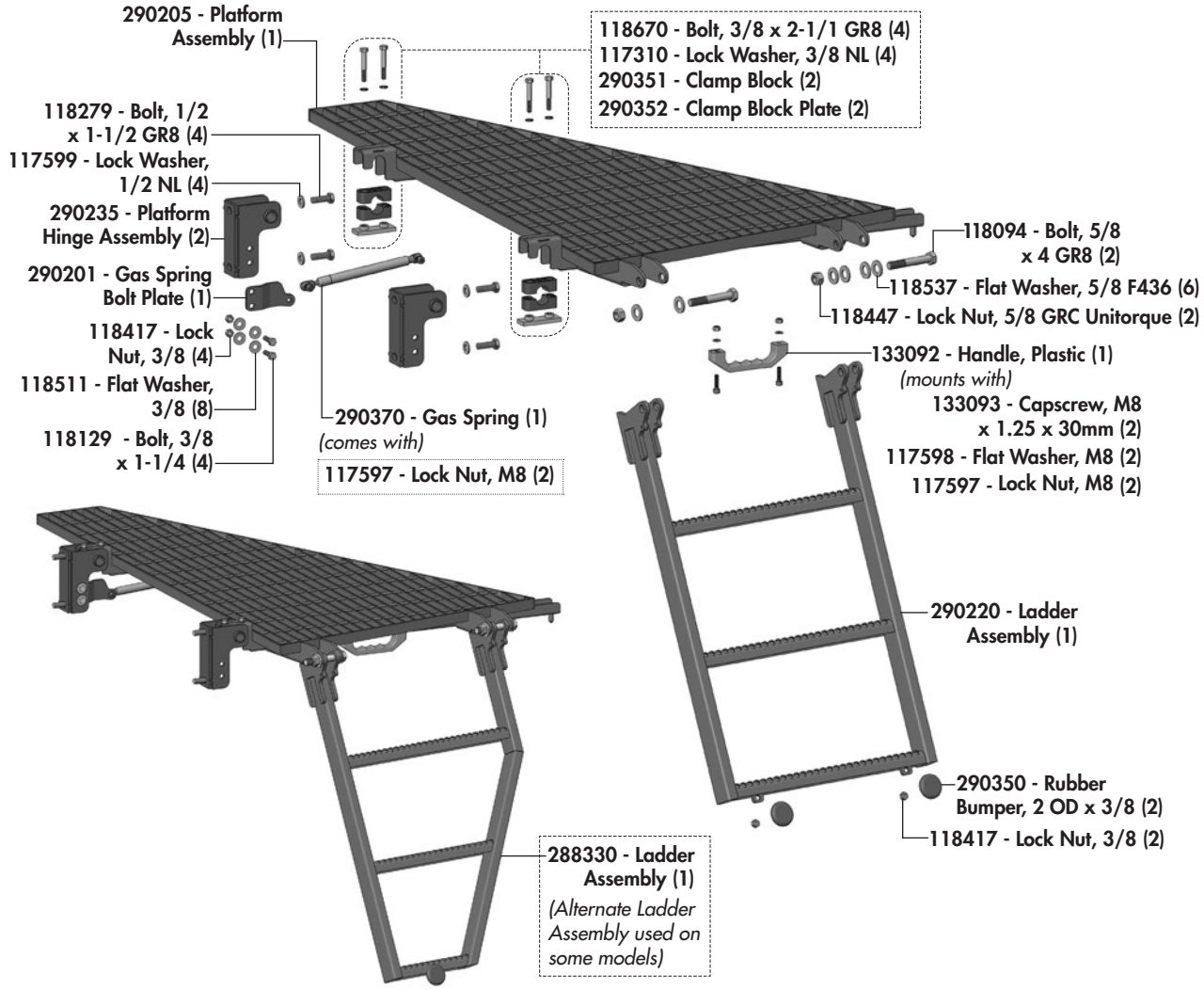

Grab Rail & Bumper Components

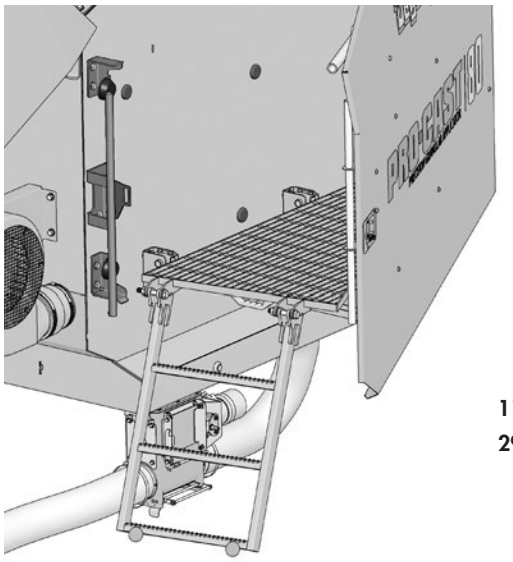

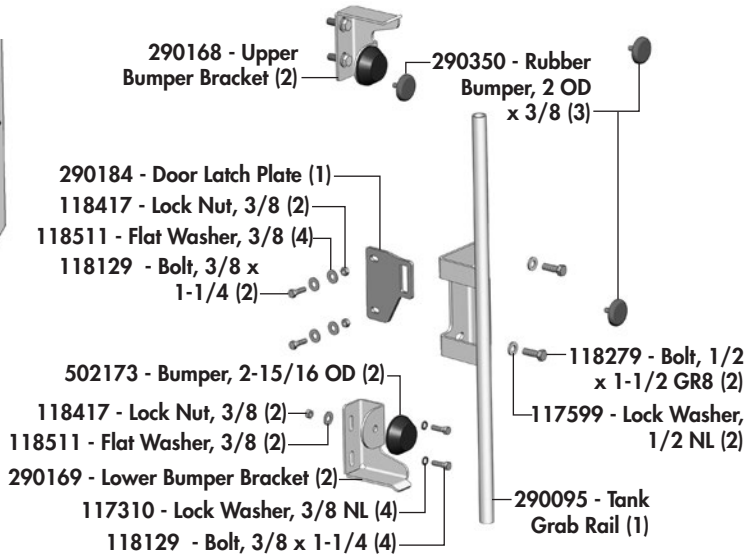

Side Door Components

Side Door Component Overview

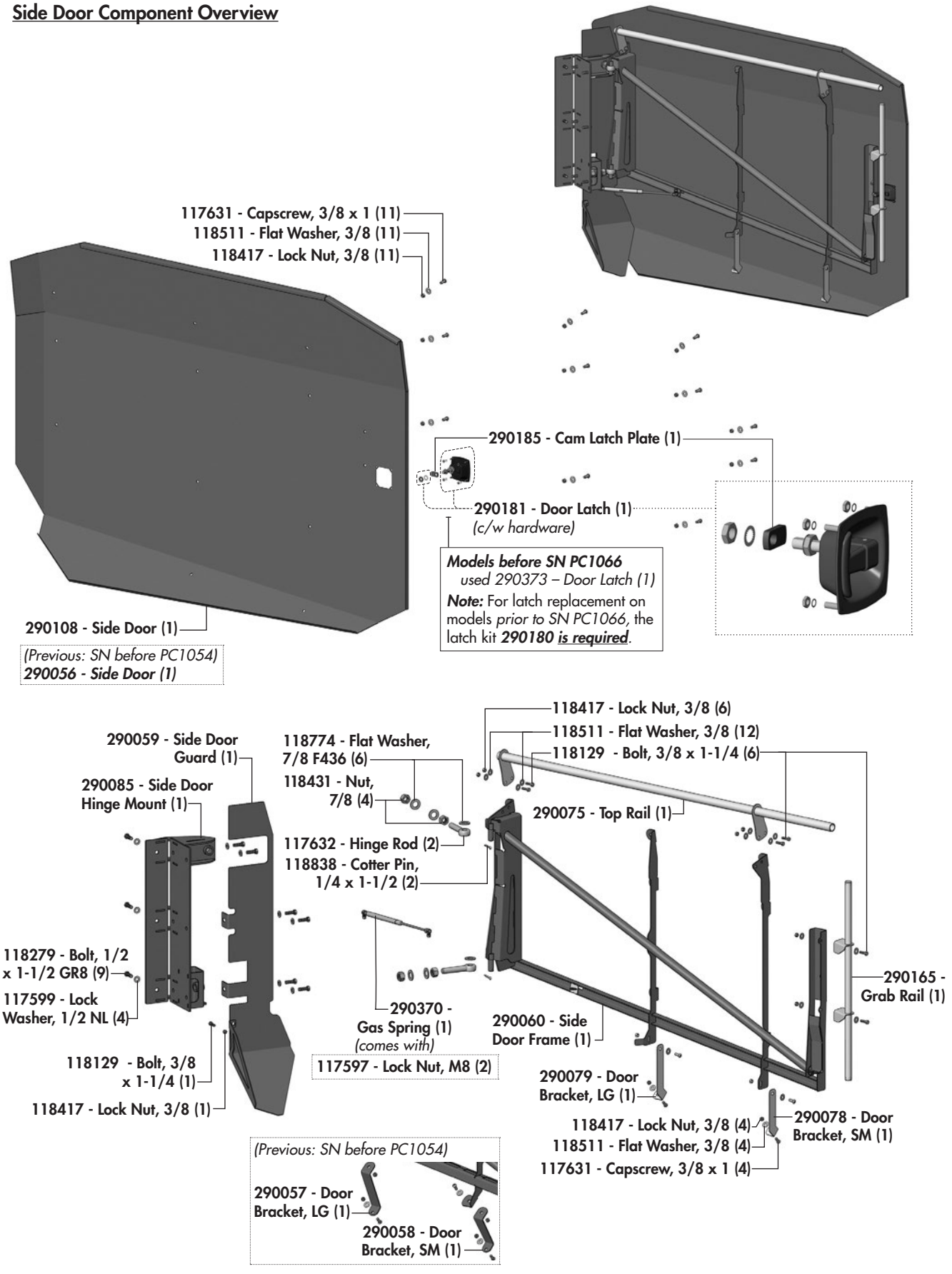

Pro-Cast Optional Kits

290150 - Bulk Bag Rack Kit

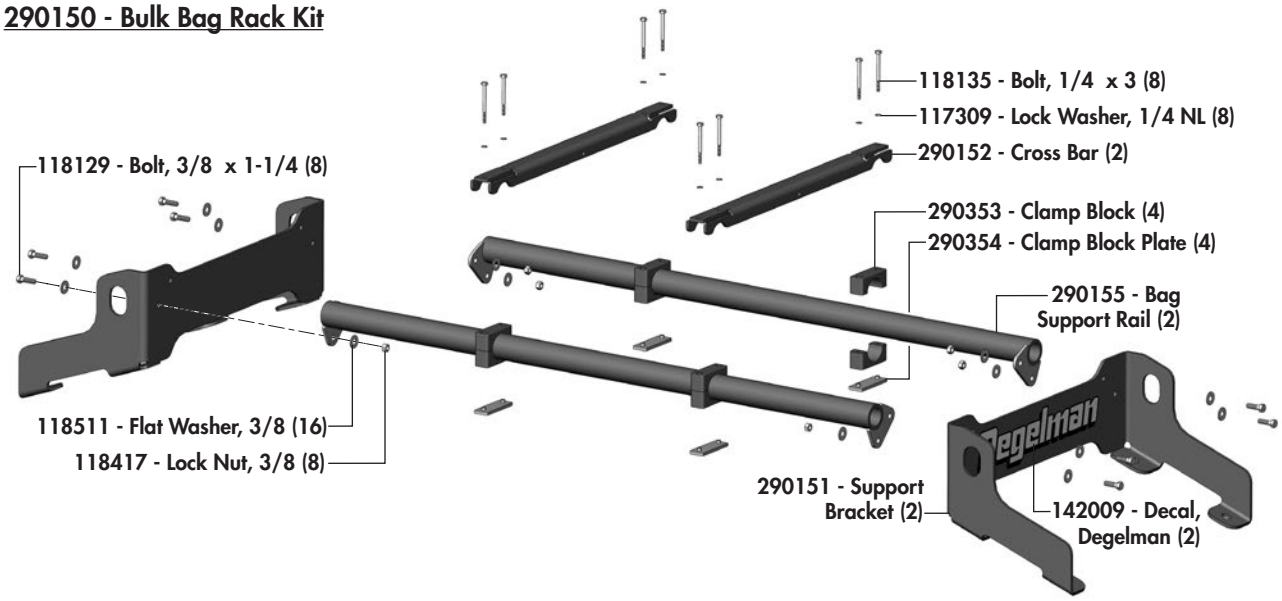

290170 - Quick Dump Kit

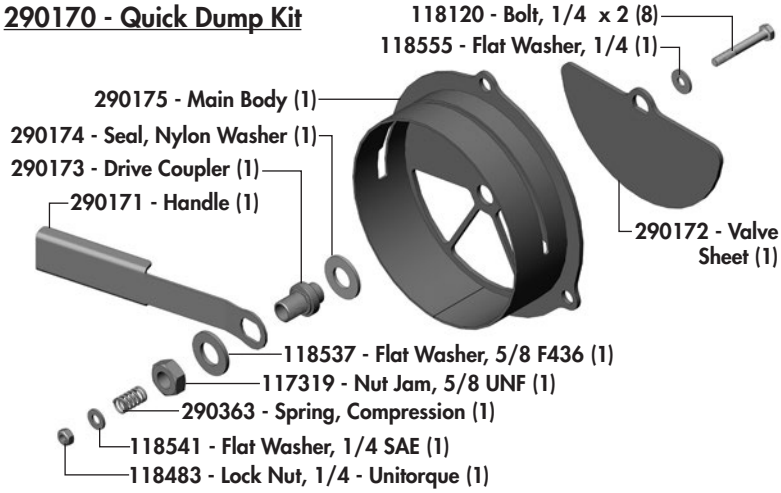

290275 - Tank Level Sensor Kit

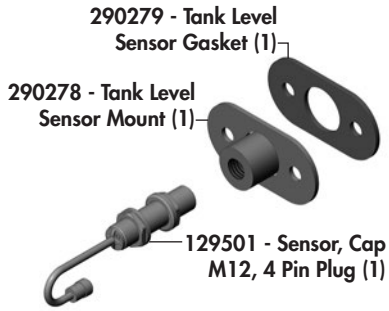

290305 - Trimble Monitor Kit

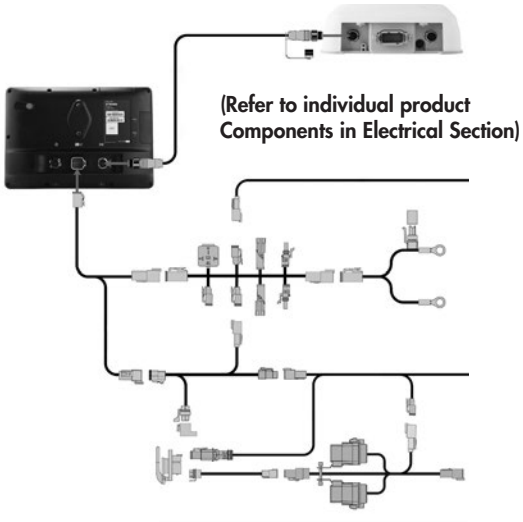

Previously Optional:

Calibration Door Sensor

129502 - Sensor, Ind - 4 Pin Plug (1)



Previous Kit:

290280 - Calibration Door Sensor Kit

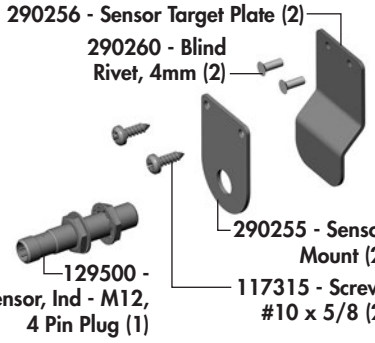

290660 - Implement Switch Mount Assembly

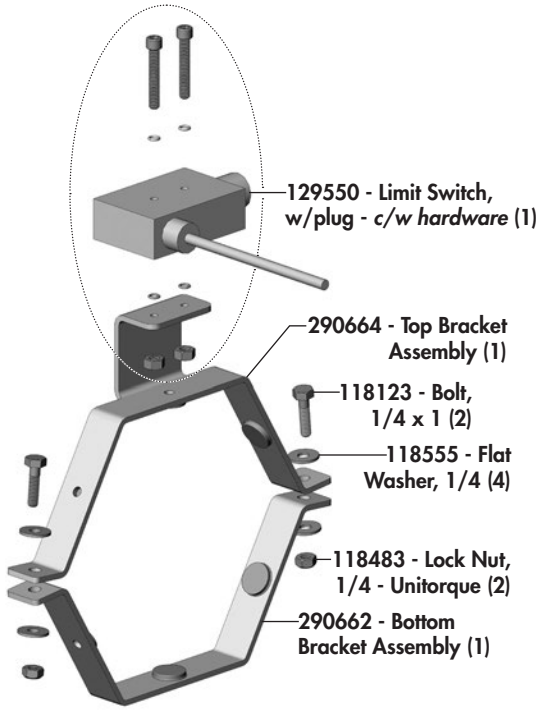

Implement Switch Mounting Overview

❶ Set discs to just touch the ground *(can place wheels, rollers & transport circuits in float & let settle).*

❷ Loosely mount switch assembly on rockshaft and rotate until switch is tripped on transport cylinder lug. Fasten in position.

❸ Check function on main screen, the icon next to the master switch symbol on the status bar will indicate whether the machine is in or out of work. Raise and lower discs to check if switch is set in correct position and system setting is correct *(out-of-work with discs raised).*

❶

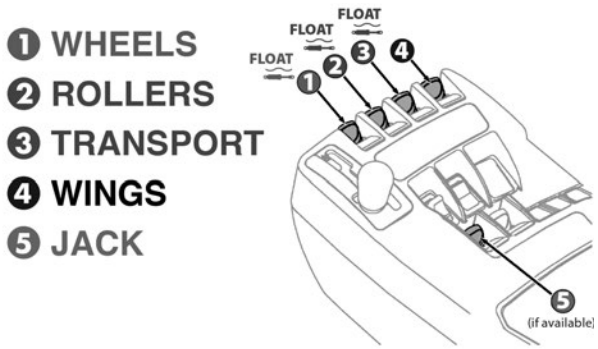

❷



(Example of implement switch installed on a Pro-Till machine.)

❸

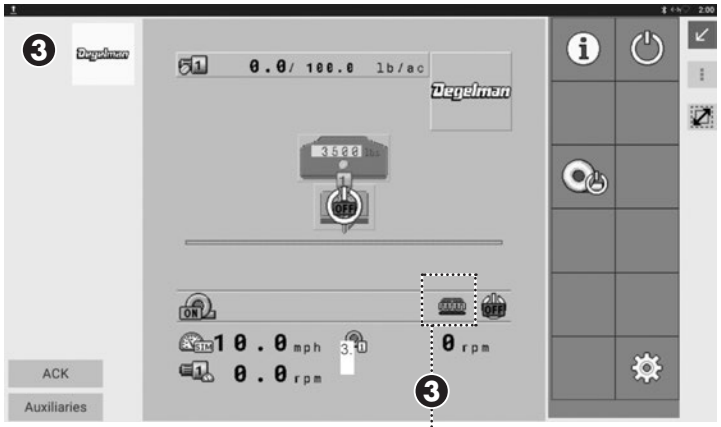

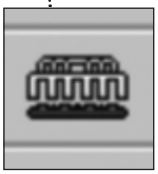

(In Work)



(Out of Work)

Hydraulic Components

LH / RH Motor Mount

- (38) 126965 - Hose, 3/8 x 38 (2) -LH
- -or-
- (60) 126879 - Hose, 3/8 x 60 (2) -RH

Common Hoses

- (20) 126927 - Hose, 3/8 x 20 (2)
- (294) 126926 - Hose, 3/8 x 294 (1)
- (34) 126929 - Hose, 1/2 x 34 (1)
- (36) 126960 - Hose, 5/8 x 36 (1)
- (295) 126925 - Hose, 3/4 x 295 (2)

Hydraulic Fittings Required

1	141573 - Flush Face Coupler - #8 ORB	(1)
2	141703 - Adaptor, #8 ORB M x #8 ORFS M	(3)
3	141704 - Elbow, 90° #8 ORB M x #8 ORFS M	(3)
4	141711 - Elbow, 90° #8 ORFS x #6 ORB M	(1)
5	141715 - Elbow, 90° #8 ORFS M x #8 ORFS F	(1)
6	141754 - Union, BLKHD #8 ORFS M x M	(1)
7	141756 - Adaptor, #12 ORB M x #8 ORFS M	(2)
8	141763 - Elbow, 90° #12 ORB M x #12 ORFS M	(1)
9	141765 - Elbow, 90° #12 ORB M Long x ORFS M	(1)
10	141766 - Elbow, 45° #8 ORFS M x ORFS F-SW	(2)
11	141767 - Quick Coupler, M - #12 ORB	(2)
12	141769 - Adaptor, #12 ORB M x #12 ORFS M	(2)
13	141761 - Adaptor, #12 ORFS M x #8 ORB M	(2)
14	141581 - Quick Coupler, M - #8 ORB	(2)



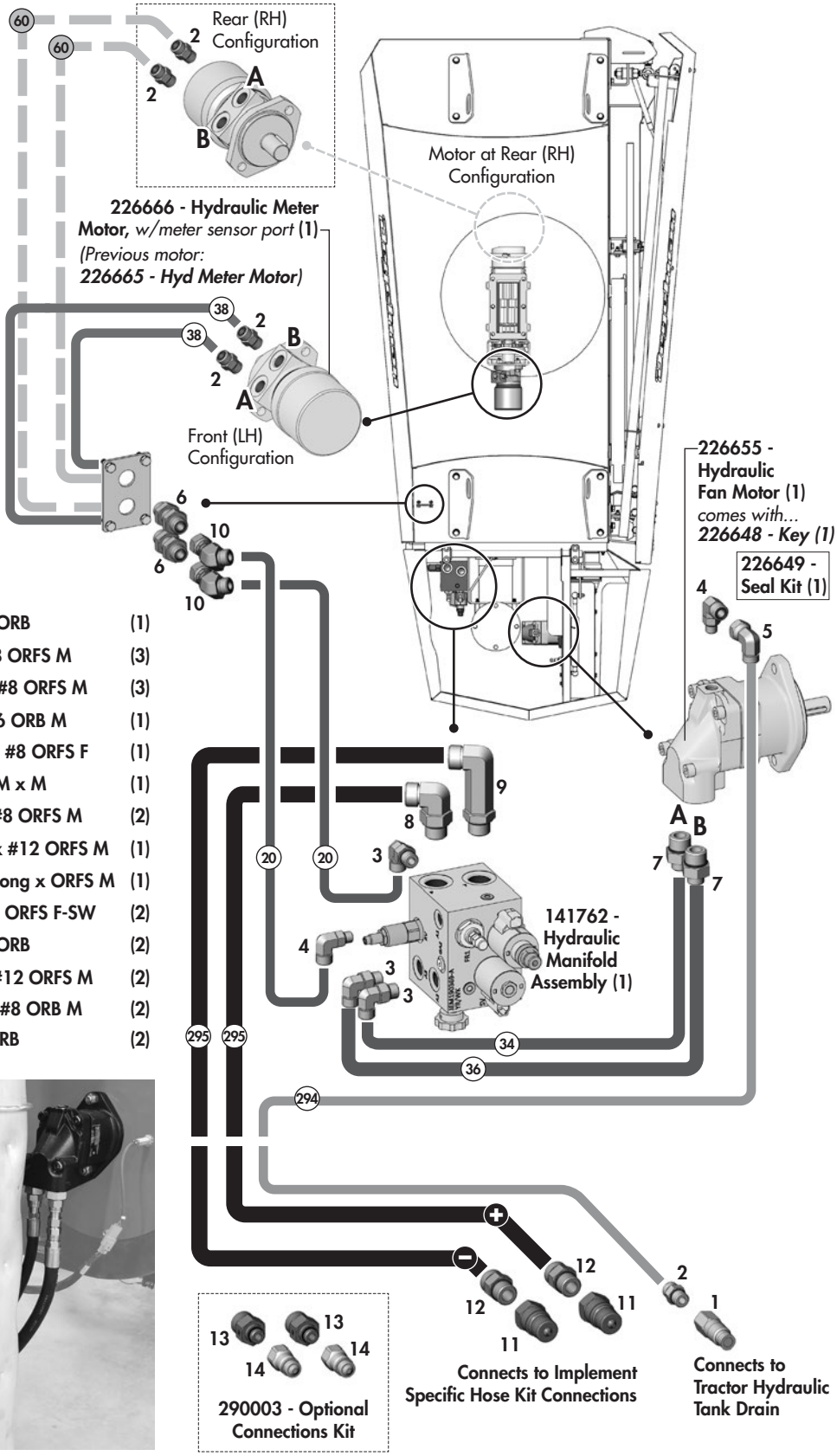

Hydraulic Components

Note: *Motor at front of meter configuration shown.*
(For motor at rear config, reverse port connection on meter motor.)

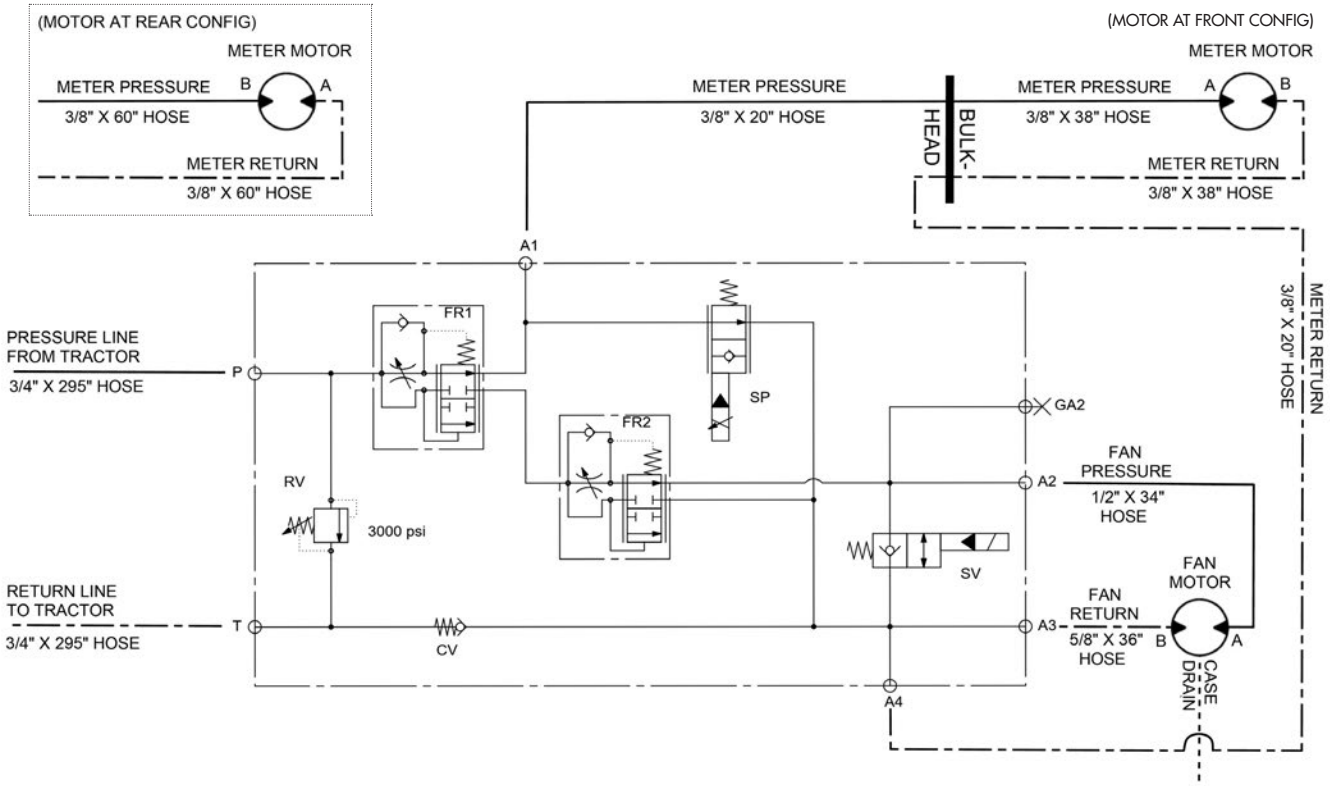

141762 - Hydraulic Manifold Assembly

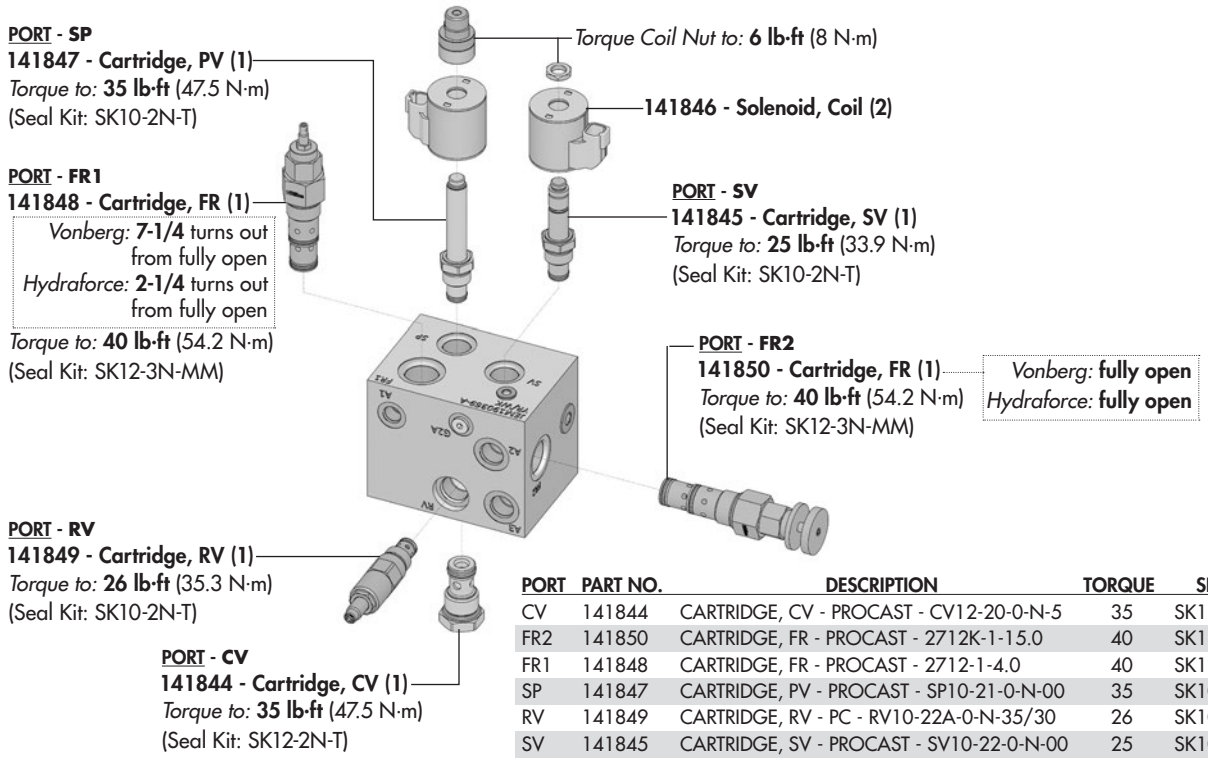

PORT	PART NO.	DESCRIPTION	TORQUE	SEAL KIT
CV	141844	CARTRIDGE, CV - PROCAST - CV12-20-0-N-5	35	SK12-2N-T
FR2	141850	CARTRIDGE, FR - PROCAST - 2712K-1-15.0	40	SK12-3N-MM
FR1	141848	CARTRIDGE, FR - PROCAST - 2712-1-4.0	40	SK12-3N-MM
SP	141847	CARTRIDGE, PV - PROCAST - SP10-21-0-N-00	35	SK10-2N-T
RV	141849	CARTRIDGE, RV - PC - RV10-22A-0-N-35/30	26	SK10-2N-T
SV	141845	CARTRIDGE, SV - PROCAST - SV10-22-0-N-00	25	SK10-2N-T

Electrical - Sensor Wiring Routing

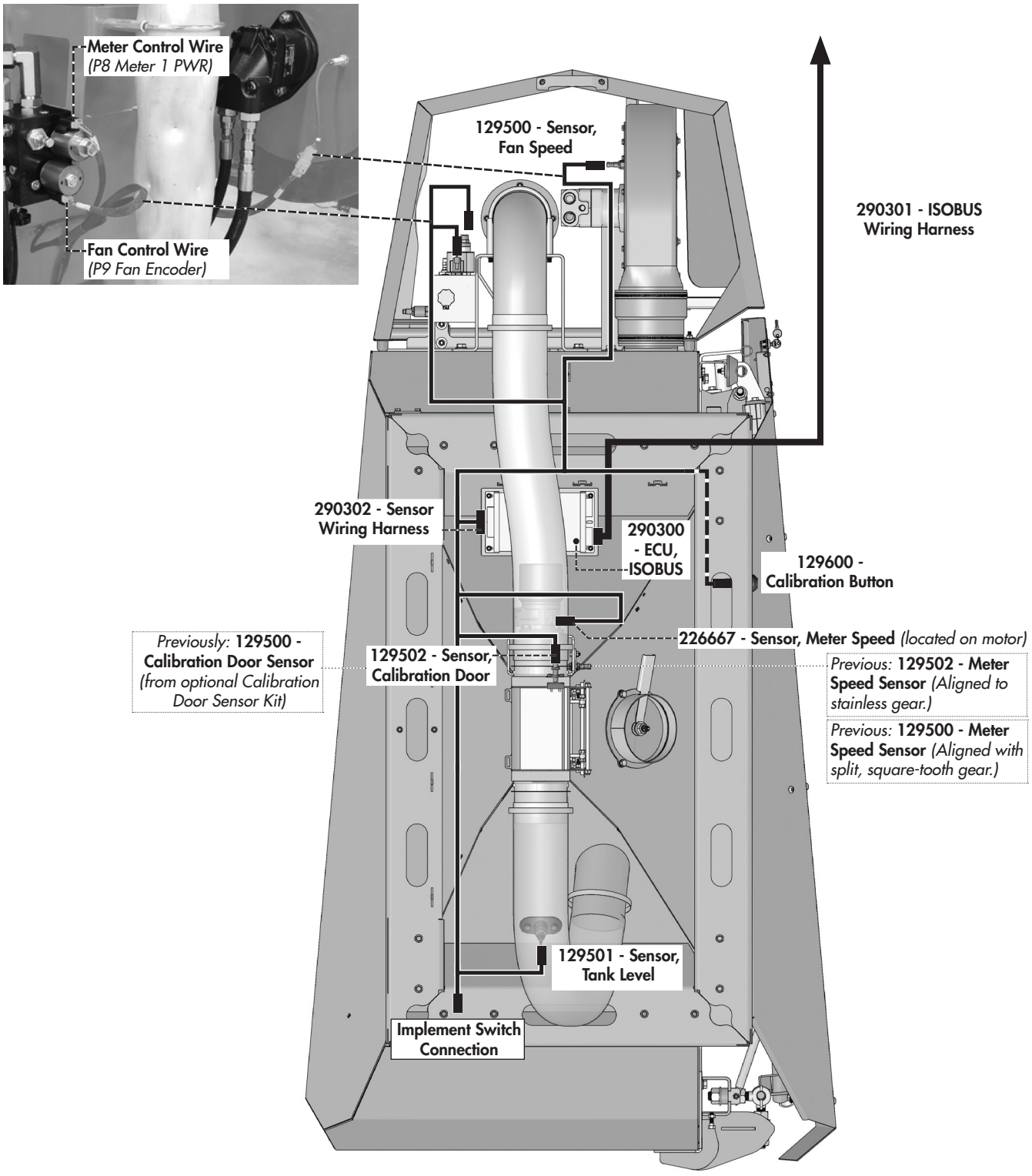

Electrical Components - Trimble Monitor Kit

290305 - Trimble GFX-750 Monitor Kit

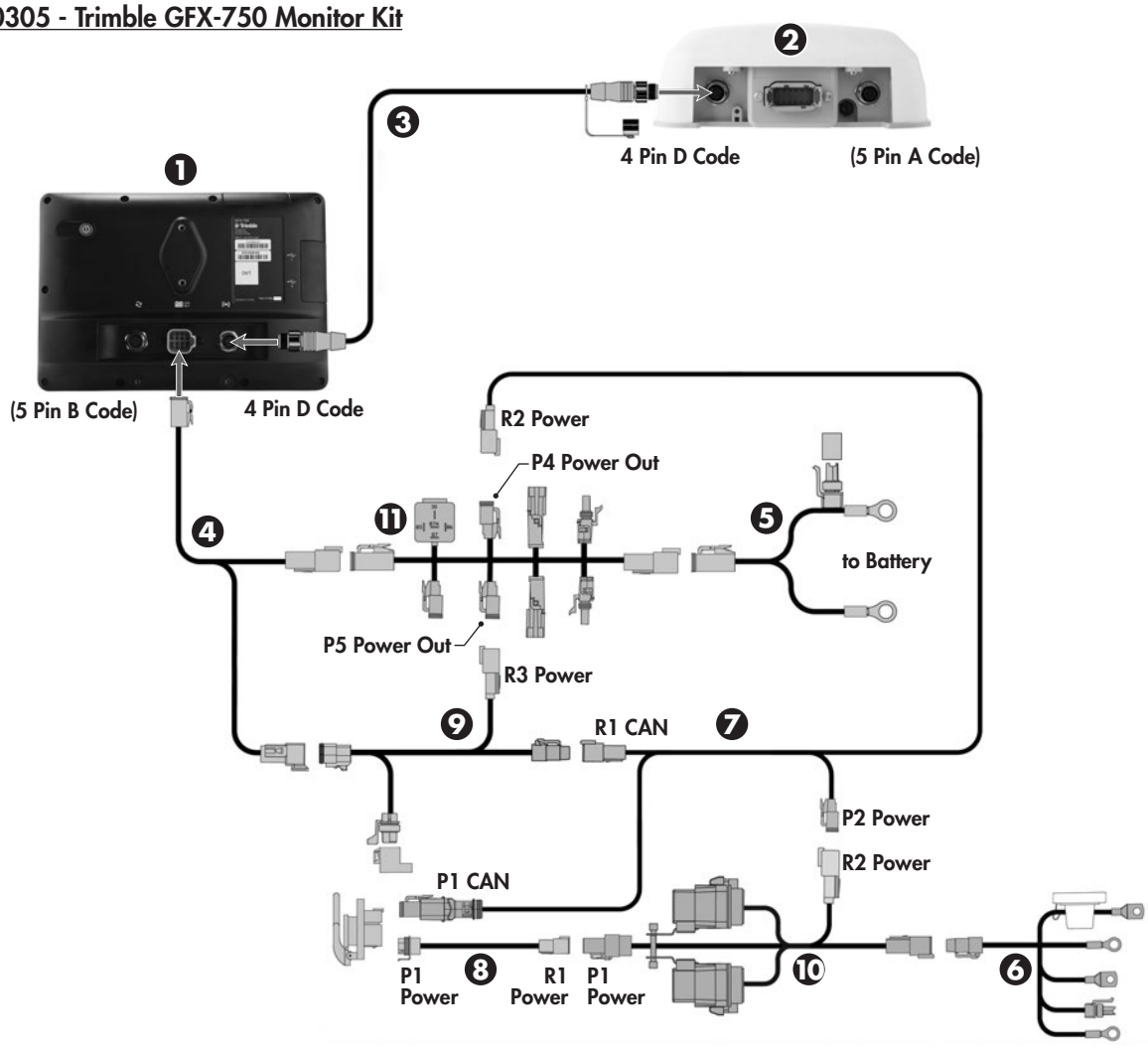

290310 - Kit comes with...

- **1** - GFX-750/XCN-1050 display, with PIQ App
- **2** - NAV-900 Guidance controller
- **3** - Cable Assy, GFX-750/XCN-1050 to NAV-900, Power/Ethernet (BRR), 5m
- **4** - Cable Assy, GFX-750/XCN-1050, Power to display, CAN, 2.5m
- **5** - Cable Assy, GFX-750/CFX-750/FM-750/XCN-1050/FmX/FM 1000 Basic Power, 4m

---

290311 - Kit comes with...

- **6** - *(290316)* Cable Assy, PWR To Cab, Field IQ
- **7** - *(290317)* Cable Assy, Field IQ, CAN CAB to Hitch
- **8** - *(290318)* Cable Assy, Powell Quick Disconnect - Tractor Side
- **9** - *(290319)* Cable Assy, GFX-750/XCN-1050, Field IQ, Active CAN terminator

---

290312 - **10** - Cable Assy, Dual Relay Pwr Cutoff, Field IQ

290313 - **11** - Cable Assy, GFX-750/CFX-750/FM-750/XCN-1050/FmX/FM 1000 Power with Relay and Switch (Acc)

2 Year

Limited Warranty - Agricultural Products

Degelman Industries LP ("Degelman") warrants to the original purchaser of any new Degelman equipment, purchased from an authorized Degelman dealer, that the equipment will be free from defects in material and workmanship for a period of two (2) years from the date of delivery, for non-commercial use (including farm, institutional, government, and municipality) and (1) year from the date of delivery for commercial use. The obligation of Degelman to the purchaser under this warranty is limited to the repair or replacement of defective parts in the first year and to the provision, but not the installation of replacement parts in the second year. Degelman reserves the right to inspect any equipment or parts which are claimed to have been defective in material or workmanship.

This warranty limits its replacement or repair coverage to what is consistent with the warranty of Degelman's suppliers of purchased components.

Replacement or repair parts installed in the equipment covered by this limited warranty are warranted for ninety (90) days from the date of delivery of such part or the expiration of the applicable new equipment warranty period, which ever occurs later. Warranted parts shall be provided at no cost to the user at an authorized Degelman dealer during regular working hours. Warranted replacement parts will either be replaced or rebuilt at Degelman's discretion.

Disclaimer of implied warranties & consequential damages

This warranty shall not be interpreted to render Degelman Industries LP liable for injury, death, property damage or damages of any kind, whether direct, consequential, or contingent to property. Without limiting the generality of the foregoing, Degelman shall not be liable for damages resulting from any cause beyond its reasonable control, including, without limitation, loss of crops, any expense or loss of labour, supplies, rental machinery or loss of use.

No other warranty of any kind whatsoever, express or implied is made with respect to this sale; and all implied warranties of merchantability and fitness for a particular purpose which exceed the obligations set forth in this written warranty are hereby disclaimed and excluded from this sale. This exclusion shall not apply in any jurisdiction where it is not permitted by law.

This limited warranty shall not apply:

1. If, in the sole opinion of Degelman, the unit has been subjected to misapplication, abuse, misuse, negligence accident or incorrect off-site machine set-up.
2. To any goods that have sustained damage or deterioration attributable to a lack of routine maintenance (eg. Check and Re-torque of fastening hardware, Hydraulic fluid purities, drive train alignments, and clutch operation)
3. If parts not made or supplied by Degelman have been used in the connection with the unit, if, in the sole judgement of Degelman such use affects its performance, safety, stability or reliability.
4. If the unit has been altered or repaired outside of an authorized Degelman dealership in a manner which, in the sole judgement of Degelman, affects its performance, safety, stability or reliability.
5. To expendable or wear items such as (eg. Harrow tines, Rock Picker and Rock Rake wear teeth and replaceable bushings and pins.) and any other items that in the company's sole judgement are a wear item.

No employee or representative of Degelman Industries LP is authorized to change this limited warranty in any way or grant any other warranty unless such change is made in writing and signed by the Degelman Service Manager.

This limited warranty is subject to any future availability of supply, which may directly affect Degelman's ability to obtain materials or manufacture replacement parts.

Degelman reserves the right to make improvements in design or changes in specifications at any time, without incurring obligations to owners of equipment previously delivered.

This limited warranty is subject to compliance by the customer to the enclosed *Retail Customer's Responsibility Under Degelman Warranty.*

Warranty

Retail Customer's Responsibility Under Degelman Warranty.

It is the retail customer and/or Operator's responsibility to read the Operator's Manual, to operate, lubricate, maintain and store the equipment in accordance with all instructions and safety procedures. Failure of the operator to read the operators manual is a misuse of this equipment.

It is the retail customer and/or operators responsibility to inspect the product and to have any part(s) repaired or replaced when continued operation would cause damage or excessive wear to other parts or cause safety hazard.

It is the retail customer's responsibility to deliver the product to the authorized Degelman dealer, from whom he purchased it, for service or replacement of defective parts, which are covered by warranty. Repairs to be submitted for warranty consideration must be made within forty-five days of failure.

It is the Retail Customer's responsibility for any cost incurred by the dealer for hauling of the product for the purpose of performing a warranty obligation or inspection.

WARRANTY INFORMATION

Make certain the warranty registration card has been forwarded to:

Degelman Industries LP
Box 830 -272 Industrial Dr.
Regina, SK, Canada
S4P 3B1

Always give your dealer the serial number of your Degelman product when ordering parts or requesting service or other information.

The serial number is located on the serial number plate (*similar to the one shown in the image below*).
In the space provide, please record the model number, the serial number and the date of purchase to assist your dealer in providing you with prompt and efficient service.

SERIAL NUMBER: _____

MODEL NUMBER: _____

DATE OF PURCHASE: _____



© 2026 Degelman Industries LP

Reference Charts

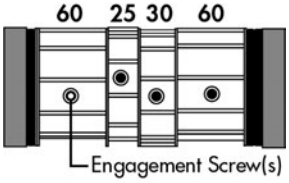

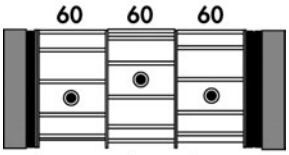

(Alternate Roller Configuration)

CALIBRATION FACTOR CHART	Product Density - lbs/bu *(lbs/ft3)*						
	30 *(24)*	35 *(28)*	40 *(32)*	45 *(36)*	50 *(40)*	55 *(44)*	60 *(48)*
Roller Configuration	Calibration Factor - lbs/rev						
25	0.07	0.08	0.1	0.11	0.12	0.13	0.14
30	0.12	0.14	0.17	0.19	0.21	0.23	0.25
25 + 30	0.2	0.23	0.26	0.29	0.33	0.36	0.39
60	0.25	0.29	0.33	0.37	0.41	0.46	0.5
60 +25	0.32	0.37	0.43	0.48	0.53	0.59	0.64
60 + 30	0.37	0.43	0.5	0.56	0.62	0.68	0.75
60 + 30 + 25	0.44	0.52	0.59	0.67	0.74	0.82	0.89
60 + 60	0.5	0.58	0.66	0.75	0.83	0.91	0.99
60 + 60 + 25	0.57	0.66	0.76	0.85	0.95	1.04	1.14
60 + 60 + 30	0.62	0.72	0.83	0.93	1.04	1.14	1.24
60 + 60 + 30 + 25	0.69	0.81	0.92	1.04	1.16	1.27	1.39
60 + 60 + 60	0.75	0.87	0.99	1.12	1.24	1.37	1.49

Pro-Till 30	Product Density - lbs/bu *(lbs/ft3)*						
	30 *(24)*	35 *(28)*	40 *(32)*	45 *(36)*	50 *(40)*	55 *(44)*	60 *(48)*
Roller Configuration	Application Rate Range - lbs/acre (values shown are with implement speed at 10mph)						
25	5 - 9	6 - 10	7 - 12	8 - 13	9 - 15	10 - 16	11 - 18
30	9 - 15	11 - 18	12 - 20	14 - 23	15 - 26	17 - 28	18 - 31
25 + 30	15 - 24	17 - 28	19 - 32	22 - 36	24 - 40	27 - 45	29 - 49
60	18 - 31	22 - 36	25 - 41	28 - 46	31 - 51	34 - 56	37 - 61
60 +25	24 - 40	28 - 46	32 - 53	36 - 60	40 - 66	44 - 73	48 - 79
60 + 30	28 - 46	32 - 54	37 - 61	42 - 69	46 - 77	51 - 85	55 - 92
60 + 30 + 25	33 - 55	39 - 64	44 - 73	50 - 83	55 - 92	61 - 101	66 - 110
60 + 60	37 - 61	43 - 72	49 - 82	55 - 92	61 - 102	68 - 113	74 - 123
60 + 60 + 25	42 - 70	49 - 82	56 - 94	63 - 106	70 - 117	77 - 129	84 - 141
60 + 60 + 30	46 - 77	54 - 90	61 - 102	69 - 115	77 - 128	85 - 141	92 - 154
60 + 60 + 30 + 25	51 - 86	60 - 100	69 - 114	77 - 129	86 - 143	94 - 157	103 - 172
60 + 60 + 60	55 - 111	65 - 129	74 - 148	83 - 166	92 - 184	101 - 203	111 - 221
For speeds other than 10mph, use **Target Application Rate x (*Speed* /10mph)** then use this value for selection above.							

Pro-Till 33	Product Density - lbs/bu *(lbs/ft3)*						
	30 *(24)*	35 *(28)*	40 *(32)*	45 *(36)*	50 *(40)*	55 *(44)*	60 *(48)*
Roller Configuration	Application Rate Range - lbs/acre (values shown are with implement speed at 10mph)						
25	5 - 8	6 - 9	6 - 11	7 - 12	8 - 14	9 - 15	10 - 16
30	8 - 14	10 - 16	11 - 19	13 - 21	14 - 23	15 - 26	17 - 28
25 + 30	13 - 22	15 - 26	18 - 29	20 - 33	22 - 37	24 - 40	27 - 44
60	17 - 28	20 - 33	22 - 37	25 - 42	28 - 47	31 - 51	34 - 56
60 +25	22 - 36	25 - 42	29 - 48	32 - 54	36 - 60	40 - 66	43 - 72
60 + 30	25 - 42	29 - 49	34 - 56	38 - 63	42 - 70	46 - 77	50 - 84
60 + 30 + 25	30 - 50	35 - 58	40 - 67	45 - 75	50 - 83	55 - 92	60 - 100
60 + 60	34 - 56	39 - 65	45 - 75	50 - 84	56 - 93	61 - 102	67 - 112
60 + 60 + 25	38 - 64	45 - 75	51 - 85	58 - 96	64 - 107	70 - 117	77 - 128
60 + 60 + 30	42 - 70	49 - 82	56 - 93	63 - 105	70 - 116	77 - 128	84 - 140
60 + 60 + 30 + 25	47 - 78	55 - 91	62 - 104	70 - 117	78 - 130	86 - 143	94 - 156
60 + 60 + 60	50 - 101	59 - 117	67 - 134	75 - 151	84 - 168	92 - 184	101 - 201
For speeds other than 10mph, use **Target Application Rate x (*Speed* /10mph)** then use this value for selection above.							

Reference Charts

Pro-Till 36	Product Density - lbs/bu *(lbs/ft3)*						
	30 *(24)*	35 *(28)*	40 *(32)*	45 *(36)*	50 *(40)*	55 *(44)*	60 *(48)*
Roller Configuration	Application Rate Range - lbs/acre (values shown are with implement speed at 10mph)						
25	4 - 7	5 - 9	6 - 10	7 - 11	7 - 12	8 - 14	9 - 15
30	8 - 13	9 - 15	10 - 17	12 - 19	13 - 21	14 - 23	15 - 26
25 + 30	12 - 20	14 - 24	16 - 27	18 - 30	20 - 34	22 - 37	24 - 40
60	15 - 26	18 - 30	20 - 34	23 - 38	26 - 43	28 - 47	31 - 51
60 +25	20 - 33	23 - 39	26 - 44	30 - 50	33 - 55	36 - 61	40 - 66
60 + 30	23 - 38	27 - 45	31 - 51	35 - 58	38 - 64	42 - 70	46 - 77
60 + 30 + 25	28 - 46	32 - 54	37 - 61	41 - 69	46 - 76	50 - 84	55 - 92
60 + 60	31 - 51	36 - 60	41 - 68	46 - 77	51 - 85	56 - 94	61 - 102
60 + 60 + 25	35 - 59	41 - 68	47 - 78	53 - 88	59 - 98	65 - 108	70 - 117
60 + 60 + 30	38 - 64	45 - 75	51 - 85	58 - 96	64 - 107	70 - 117	77 - 128
60 + 60 + 30 + 25	43 - 71	50 - 83	57 - 95	64 - 107	71 - 119	79 - 131	86 - 143
60 + 60 + 60	46 - 92	54 - 108	61 - 123	69 - 138	77 - 154	85 - 169	92 - 184
For speeds other than 10mph, use **Target Application Rate x (*Speed* /10mph)** then use this value for selection above.							

Pro-Till 40	Product Density - lbs/bu *(lbs/ft3)*						
	30 *(24)*	35 *(28)*	40 *(32)*	45 *(36)*	50 *(40)*	55 *(44)*	60 *(48)*
Roller Configuration	Application Rate Range - lbs/acre (values shown are with implement speed at 10mph)						
25	4 - 7	5 - 8	5 - 9	6 - 10	7 - 11	7 - 12	8 - 13
30	7 - 12	8 - 13	9 - 15	10 - 17	12 - 19	13 - 21	14 - 23
25 + 30	11 - 18	13 - 21	15 - 24	16 - 27	18 - 30	20 - 33	22 - 36
60	14 - 23	16 - 27	18 - 31	21 - 35	23 - 38	25 - 42	28 - 46
60 +25	18 - 30	21 - 35	24 - 40	27 - 45	30 - 50	33 - 55	36 - 60
60 + 30	21 - 35	24 - 40	28 - 46	31 - 52	35 - 58	38 - 63	42 - 69
60 + 30 + 25	25 - 41	29 - 48	33 - 55	37 - 62	41 - 69	45 - 76	50 - 83
60 + 60	28 - 46	32 - 54	37 - 61	42 - 69	46 - 77	51 - 85	55 - 92
60 + 60 + 25	32 - 53	37 - 62	42 - 70	48 - 79	53 - 88	58 - 97	63 - 106
60 + 60 + 30	35 - 58	40 - 67	46 - 77	52 - 86	58 - 96	63 - 106	69 - 115
60 + 60 + 30 + 25	39 - 64	45 - 75	51 - 86	58 - 97	64 - 107	71 - 118	77 - 129
60 + 60 + 60	42 - 83	48 - 97	55 - 111	62 - 125	69 - 138	76 - 152	83 - 166
For speeds other than 10mph, use **Target Application Rate x (*Speed* /10mph)** then use this value for selection above.							

Pro-Till 41	Product Density - lbs/bu *(lbs/ft3)*						
	30 *(24)*	35 *(28)*	40 *(32)*	45 *(36)*	50 *(40)*	55 *(44)*	60 *(48)*
Roller Configuration	Application Rate Range - lbs/acre (values shown are with implement speed at 10mph)						
25	4 - 7	5 - 8	5 - 9	6 - 10	7 - 11	7 - 12	8 - 13
30	7 - 11	8 - 13	9 - 15	10 - 17	11 - 19	12 - 21	13 - 22
25 + 30	11 - 18	12 - 21	14 - 24	16 - 27	18 - 30	20 - 33	21 - 36
60	13 - 22	16 - 26	18 - 30	20 - 34	22 - 37	25 - 41	27 - 45
60 +25	17 - 29	20 - 34	23 - 39	26 - 44	29 - 48	32 - 53	35 - 58
60 + 30	20 - 34	24 - 39	27 - 45	30 - 51	34 - 56	37 - 62	40 - 67
60 + 30 + 25	24 - 40	28 - 47	32 - 54	36 - 60	40 - 67	44 - 74	48 - 81
60 + 60	27 - 45	31 - 52	36 - 60	40 - 67	45 - 75	49 - 82	54 - 90
60 + 60 + 25	31 - 52	36 - 60	41 - 69	46 - 77	52 - 86	57 - 94	62 - 103
60 + 60 + 30	34 - 56	39 - 66	45 - 75	51 - 84	56 - 94	62 - 103	67 - 112
60 + 60 + 30 + 25	38 - 63	44 - 73	50 - 84	56 - 94	63 - 105	69 - 115	75 - 126
60 + 60 + 60	40 - 81	47 - 94	54 - 108	61 - 121	67 - 135	74 - 148	81 - 162
For speeds other than 10mph, use **Target Application Rate x (*Speed* /10mph)** then use this value for selection above.							

Reference Charts

Pro-Till 45	Product Density - lbs/bu *(lbs/ft3)*						
	30 *(24)*	35 *(28)*	40 *(32)*	45 *(36)*	50 *(40)*	55 *(44)*	60 *(48)*
Roller Configuration	Application Rate Range - lbs/acre (values shown are with implement speed at 10mph)						
25	4 - 6	4 - 7	5 - 8	5 - 9	6 - 10	7 - 11	7 - 12
30	6 - 10	7 - 12	8 - 14	9 - 15	10 - 17	11 - 19	12 - 20
25 + 30	10 - 16	11 - 19	13 - 22	15 - 24	16 - 27	18 - 30	19 - 32
60	12 - 20	14 - 24	16 - 27	18 - 31	20 - 34	23 - 38	25 - 41
60 +25	16 - 26	19 - 31	21 - 35	24 - 40	26 - 44	29 - 48	32 - 53
60 + 30	18 - 31	22 - 36	25 - 41	28 - 46	31 - 51	34 - 56	37 - 61
60 + 30 + 25	22 - 37	26 - 43	29 - 49	33 - 55	37 - 61	40 - 67	44 - 73
60 + 60	25 - 41	29 - 48	33 - 55	37 - 61	41 - 68	45 - 75	49 - 82
60 + 60 + 25	28 - 47	33 - 55	38 - 63	42 - 70	47 - 78	52 - 86	56 - 94
60 + 60 + 30	31 - 51	36 - 60	41 - 68	46 - 77	51 - 85	56 - 94	61 - 102
60 + 60 + 30 + 25	34 - 57	40 - 67	46 - 76	51 - 86	57 - 95	63 - 105	69 - 114
60 + 60 + 60	37 - 74	43 - 86	49 - 98	55 - 111	61 - 123	68 - 135	74 - 148
For speeds other than 10mph, use **Target Application Rate x (*Speed* /10mph)** then use this value for selection above.							

STRAWMASTER+ 70	Product Density - lbs/bu *(lbs/ft3)*						
	30 *(24)*	35 *(28)*	40 *(32)*	45 *(36)*	50 *(40)*	55 *(44)*	60 *(48)*
Roller Configuration	Application Rate Range - lbs/acre (values shown are with implement speed at 10mph)						
25	2 - 4	3 - 4	3 - 5	3 - 6	4 - 6	4 - 7	5 - 8
30	4 - 7	5 - 8	5 - 9	6 - 10	7 - 11	7 - 12	8 - 13
25 + 30	6 - 10	7 - 12	8 - 14	9 - 16	10 - 17	11 - 19	12 - 21
60	8 - 13	9 - 15	11 - 18	12 - 20	13 - 22	14 - 24	16 - 26
60 +25	10 - 17	12 - 20	14 - 23	15 - 26	17 - 28	19 - 31	20 - 34
60 + 30	12 - 20	14 - 23	16 - 26	18 - 30	20 - 33	22 - 36	24 - 40
60 + 30 + 25	14 - 24	17 - 28	19 - 31	21 - 35	24 - 39	26 - 43	28 - 47
60 + 60	16 - 26	18 - 31	21 - 35	24 - 40	26 - 44	29 - 48	32 - 53
60 + 60 + 25	18 - 30	21 - 35	24 - 40	27 - 45	30 - 50	33 - 55	36 - 60
60 + 60 + 30	20 - 33	23 - 38	26 - 44	30 - 49	33 - 55	36 - 60	40 - 66
60 + 60 + 30 + 25	22 - 37	26 - 43	29 - 49	33 - 55	37 - 61	40 - 67	44 - 74
60 + 60 + 60	24 - 47	28 - 55	32 - 63	36 - 71	40 - 79	43 - 87	47 - 95
For speeds other than 10mph, use **Target Application Rate x (*Speed* /10mph)** then use this value for selection above.							

STRAWMASTER+ 90	Product Density - lbs/bu *(lbs/ft3)*						
	30 *(24)*	35 *(28)*	40 *(32)*	45 *(36)*	50 *(40)*	55 *(44)*	60 *(48)*
Roller Configuration	Application Rate Range - lbs/acre (values shown are with implement speed at 10mph)						
25	2 - 3	2 - 3	2 - 4	3 - 4	3 - 5	3 - 5	4 - 6
30	3 - 5	4 - 6	4 - 7	5 - 8	5 - 9	6 - 9	6 - 10
25 + 30	5 - 8	6 - 9	6 - 11	7 - 12	8 - 13	9 - 15	10 - 16
60	6 - 10	7 - 12	8 - 14	9 - 15	10 - 17	11 - 19	12 - 20
60 +25	8 - 13	9 - 15	11 - 18	12 - 20	13 - 22	15 - 24	16 - 26
60 + 30	9 - 15	11 - 18	12 - 20	14 - 23	15 - 26	17 - 28	18 - 31
60 + 30 + 25	11 - 18	13 - 21	15 - 24	17 - 28	18 - 31	20 - 34	22 - 37
60 + 60	12 - 20	14 - 24	16 - 27	18 - 31	20 - 34	23 - 38	25 - 41
60 + 60 + 25	14 - 23	16 - 27	19 - 31	21 - 35	23 - 39	26 - 43	28 - 47
60 + 60 + 30	15 - 26	18 - 30	20 - 34	23 - 38	26 - 43	28 - 47	31 - 51
60 + 60 + 30 + 25	17 - 29	20 - 33	23 - 38	26 - 43	29 - 48	31 - 52	34 - 57
60 + 60 + 60	18 - 37	22 - 43	25 - 49	28 - 55	31 - 61	34 - 68	37 - 74
For speeds other than 10mph, use **Target Application Rate x (*Speed* /10mph)** then use this value for selection above.							

Reference Charts

SMP 80	Product Density - lbs/bu *(lbs/ft3)*						
	30 *(24)*	35 *(28)*	40 *(32)*	45 *(36)*	50 *(40)*	55 *(44)*	60 *(48)*
Roller Configuration	Application Rate Range - lbs/acre (values shown are with implement speed at 10mph)						
25	2 - 3	3 - 3	4 - 3	5 - 3	6 - 3	7 - 3	8 - 3
30	3 - 6	4 - 7	5 - 8	5 - 9	6 - 10	6 - 11	7 - 12
25 + 30	5 - 9	6 - 11	7 - 12	8 - 14	9 - 15	10 - 17	11 - 18
60	7 - 12	8 - 13	9 - 15	10 - 17	12 - 19	13 - 21	14 - 23
60 +25	9 - 15	10 - 17	12 - 20	13 - 22	15 - 25	16 - 27	18 - 30
60 + 30	10 - 17	12 - 20	14 - 23	16 - 26	17 - 29	19 - 32	21 - 35
60 + 30 + 25	12 - 21	14 - 24	17 - 28	19 - 31	21 - 34	23 - 38	25 - 41
60 + 60	14 - 23	16 - 27	18 - 31	21 - 35	23 - 38	25 - 42	28 - 46
60 + 60 + 25	16 - 26	18 - 31	21 - 35	24 - 40	26 - 44	29 - 48	32 - 53
60 + 60 + 30	17 - 29	20 - 34	23 - 38	26 - 43	29 - 48	32 - 53	35 - 58
60 + 60 + 30 + 25	19 - 32	23 - 38	26 - 43	29 - 48	32 - 54	35 - 59	39 - 64
60 + 60 + 60	21 - 42	24 - 48	28 - 55	31 - 62	35 - 69	38 - 76	42 - 83
For speeds other than 10mph, use **Target Application Rate x (*Speed* /10mph)** then use this value for selection above.							

SMP 100	Product Density - lbs/bu *(lbs/ft3)*						
	30 *(24)*	35 *(28)*	40 *(32)*	45 *(36)*	50 *(40)*	55 *(44)*	60 *(48)*
Roller Configuration	Application Rate Range - lbs/acre (values shown are with implement speed at 10mph)						
25	2 - 3	2 - 3	2 - 4	2 - 4	3 - 4	3 - 5	3 - 5
30	3 - 5	3 - 5	4 - 6	4 - 7	5 - 8	5 - 8	6 - 9
25 + 30	4 - 7	5 - 9	6 - 10	7 - 11	7 - 12	8 - 13	9 - 15
60	6 - 9	6 - 11	7 - 12	8 - 14	9 - 15	10 - 17	11 - 18
60 +25	7 - 12	8 - 14	10 - 16	11 - 18	12 - 20	13 - 22	14 - 24
60 + 30	8 - 14	10 - 16	11 - 18	12 - 21	14 - 23	15 - 25	17 - 28
60 + 30 + 25	10 - 17	12 - 19	13 - 22	15 - 25	17 - 28	18 - 30	20 - 33
60 + 60	11 - 18	13 - 22	15 - 25	17 - 28	18 - 31	20 - 34	22 - 37
60 + 60 + 25	13 - 21	15 - 25	17 - 28	19 - 32	21 - 35	23 - 39	25 - 42
60 + 60 + 30	14 - 23	16 - 27	18 - 31	21 - 35	23 - 38	25 - 42	28 - 46
60 + 60 + 30 + 25	15 - 26	18 - 30	21 - 34	23 - 39	26 - 43	28 - 47	31 - 51
60 + 60 + 60	17 - 33	19 - 39	22 - 44	25 - 50	28 - 55	30 - 61	33 - 66
For speeds other than 10mph, use **Target Application Rate x (*Speed* /10mph)** then use this value for selection above.							

SMP 120	Product Density - lbs/bu *(lbs/ft3)*						
	30 *(24)*	35 *(28)*	40 *(32)*	45 *(36)*	50 *(40)*	55 *(44)*	60 *(48)*
Roller Configuration	Application Rate Range - lbs/acre (values shown are with implement speed at 10mph)						
25	1 - 2	2 - 3	2 - 3	2 - 3	2 - 4	2 - 4	3 - 4
30	2 - 4	3 - 4	3 - 5	3 - 6	4 - 6	4 - 7	5 - 8
25 + 30	4 - 6	4 - 7	5 - 8	5 - 9	6 - 10	7 - 11	7 - 12
60	5 - 8	5 - 9	6 - 10	7 - 12	8 - 13	8 - 14	9 - 15
60 +25	6 - 10	7 - 12	8 - 13	9 - 15	10 - 17	11 - 18	12 - 20
60 + 30	7 - 12	8 - 13	9 - 15	10 - 17	12 - 19	13 - 21	14 - 23
60 + 30 + 25	8 - 14	10 - 16	11 - 18	12 - 21	14 - 23	15 - 25	17 - 28
60 + 60	9 - 15	11 - 18	12 - 20	14 - 23	15 - 26	17 - 28	18 - 31
60 + 60 + 25	11 - 18	12 - 21	14 - 23	16 - 26	18 - 29	19 - 32	21 - 35
60 + 60 + 30	12 - 19	13 - 22	15 - 26	17 - 29	19 - 32	21 - 35	23 - 38
60 + 60 + 30 + 25	13 - 21	15 - 25	17 - 29	19 - 32	21 - 36	24 - 39	26 - 43
60 + 60 + 60	14 - 28	16 - 32	18 - 37	21 - 42	23 - 46	25 - 51	28 - 55
For speeds other than 10mph, use **Target Application Rate x (*Speed* /10mph)** then use this value for selection above.							

Reference Charts

STRAWMASTER 50	Product Density - lbs/bu *(lbs/ft3)*						
	30 *(24)*	35 *(28)*	40 *(32)*	45 *(36)*	50 *(40)*	55 *(44)*	60 *(48)*
Roller Configuration	Application Rate Range - lbs/acre (values shown are with implement speed at 10mph)						
25	3 - 5	4 - 6	4 - 7	5 - 8	5 - 9	6 - 10	6 - 11
30	6 - 9	6 - 11	7 - 12	8 - 14	9 - 15	10 - 17	11 - 18
25 + 30	9 - 15	10 - 17	12 - 19	13 - 22	15 - 24	16 - 27	17 - 29
60	11 - 18	13 - 22	15 - 25	17 - 28	18 - 31	20 - 34	22 - 37
60 +25	14 - 24	17 - 28	19 - 32	21 - 36	24 - 40	26 - 44	29 - 48
60 + 30	17 - 28	19 - 32	22 - 37	25 - 42	28 - 46	30 - 51	33 - 55
60 + 30 + 25	20 - 33	23 - 39	26 - 44	30 - 50	33 - 55	36 - 61	40 - 66
60 + 60	22 - 37	26 - 43	30 - 49	33 - 55	37 - 61	41 - 68	44 - 74
60 + 60 + 25	25 - 42	30 - 49	34 - 56	38 - 63	42 - 70	46 - 77	51 - 84
60 + 60 + 30	28 - 46	32 - 54	37 - 61	42 - 69	46 - 77	51 - 85	55 - 92
60 + 60 + 30 + 25	31 - 51	36 - 60	41 - 69	46 - 77	51 - 86	57 - 94	62 - 103
60 + 60 + 60	33 - 66	39 - 77	44 - 89	50 - 100	55 - 111	61 - 122	66 - 133
For speeds other than 10mph, use **Target Application Rate x (*Speed* /10mph)** then use this value for selection above.							

STRAWMASTER 70	Product Density - lbs/bu *(lbs/ft3)*						
	30 *(24)*	35 *(28)*	40 *(32)*	45 *(36)*	50 *(40)*	55 *(44)*	60 *(48)*
Roller Configuration	Application Rate Range - lbs/acre (values shown are with implement speed at 10mph)						
25	2 - 4	3 - 4	3 - 5	3 - 6	4 - 6	4 - 7	5 - 8
30	4 - 7	5 - 8	5 - 9	6 - 10	7 - 11	7 - 12	8 - 13
25 + 30	6 - 10	7 - 12	8 - 14	9 - 16	10 - 17	11 - 19	12 - 21
60	8 - 13	9 - 15	11 - 18	12 - 20	13 - 22	14 - 24	16 - 26
60 +25	10 - 17	12 - 20	14 - 23	15 - 26	17 - 28	19 - 31	20 - 34
60 + 30	12 - 20	14 - 23	16 - 26	18 - 30	20 - 33	22 - 36	24 - 40
60 + 30 + 25	14 - 24	17 - 28	19 - 31	21 - 35	24 - 39	26 - 43	28 - 47
60 + 60	16 - 26	18 - 31	21 - 35	24 - 40	26 - 44	29 - 48	32 - 53
60 + 60 + 25	18 - 30	21 - 35	24 - 40	27 - 45	30 - 50	33 - 55	36 - 60
60 + 60 + 30	20 - 33	23 - 38	26 - 44	30 - 49	33 - 55	36 - 60	40 - 66
60 + 60 + 30 + 25	22 - 37	26 - 43	29 - 49	33 - 55	37 - 61	40 - 67	44 - 74
60 + 60 + 60	24 - 47	28 - 55	32 - 63	36 - 71	40 - 79	43 - 87	47 - 95
For speeds other than 10mph, use **Target Application Rate x (*Speed* /10mph)** then use this value for selection above.							

STRAWMASTER 82	Product Density - lbs/bu *(lbs/ft3)*						
	30 *(24)*	35 *(28)*	40 *(32)*	45 *(36)*	50 *(40)*	55 *(44)*	60 *(48)*
Roller Configuration	Application Rate Range - lbs/acre (values shown are with implement speed at 10mph)						
25	2 - 3	2 - 4	3 - 4	3 - 5	3 - 5	4 - 6	4 - 7
30	3 - 6	4 - 7	4 - 7	5 - 8	6 - 9	6 - 10	7 - 11
25 + 30	5 - 9	6 - 10	7 - 12	8 - 13	9 - 15	10 - 16	11 - 18
60	7 - 11	8 - 13	9 - 15	10 - 17	11 - 19	12 - 21	13 - 22
60 +25	9 - 15	10 - 17	12 - 19	13 - 22	15 - 24	16 - 27	17 - 29
60 + 30	10 - 17	12 - 20	13 - 22	15 - 25	17 - 28	19 - 31	20 - 34
60 + 30 + 25	12 - 20	14 - 23	16 - 27	18 - 30	20 - 34	22 - 37	24 - 40
60 + 60	13 - 22	16 - 26	18 - 30	20 - 34	22 - 37	25 - 41	27 - 45
60 + 60 + 25	15 - 26	18 - 30	21 - 34	23 - 39	26 - 43	28 - 47	31 - 52
60 + 60 + 30	17 - 28	20 - 33	22 - 37	25 - 42	28 - 47	31 - 52	34 - 56
60 + 60 + 30 + 25	19 - 31	22 - 37	25 - 42	28 - 47	31 - 52	35 - 58	38 - 63
60 + 60 + 60	20 - 40	24 - 47	27 - 54	30 - 61	34 - 67	37 - 74	40 - 81
For speeds other than 10mph, use **Target Application Rate x (*Speed* /10mph)** then use this value for selection above.							