Degelman

OPERATOR & PARTS MANUAL

sidearm®
1820



143060 v1.1

DEGELMAN INDUSTRIES LP
BOX 830-272 INDUSTRIAL DRIVE,
REGINA, SK, CANADA, S4P 3B1
FAX 306.543.2140 PH 306.543.4447
1.800.667.3545 DEGELMAN.COM

SIDEARM 1820

Serial Numbers 1389 and above

Degelman

sidearm®
1820

*QUICK GUIDE INDEX**

Table of Contents	*-*
Introduction	*1*
Safety	*2*
How To Set Your Tractor	*8*
How To Hook-Up Your Sidearm	*9*
How To Operate Your Sidearm	*12*
Transporting	*14*
Troubleshooting	*15*
Hydraulic Routing	*22*
Electrical Components	*34*
Parts	*36*
Attachments / Accessories	*45*
Warranty	*46*

**See table of contents for detailed index.*

DEGELMAN INDUSTRIES LP
BOX 830-272 INDUSTRIAL DRIVE,
REGINA, SK, CANADA, S4P 3B1
FAX 306.543.2140 PH 306.543.4447
1.800.667.3545 DEGELMAN.COM

⚠ IMPORTANT:



READ MANUAL

Table of Contents

1. Introduction 01

2. Safety
- Important Safety Information 02
- General Safety.....03
- Safety Decals 04
- Decal Placement 05

3. How To Set Your Tractor
- Tractor Requirements.....08
- Correct PTO Speed 08
- Positioning Tractor Drawbar 08
- Correct Drawbar Length.....08
- 3 Point Quick Coupler Hitch 08
- Hydraulic Flow Settings.....08

4. How to Hook-Up Your Sidearm
- Attaching Drawbar Plate 09
- Attaching Sidearm to Tractor 10
- Installing Safety Chain 10
- Attaching PTO Driveline.....10
- Attaching Hydraulics.....10
- Connecting Lights.....10
- Install Switch Box (Optional)..... 10

5. How to Operate Your Sidearm
- Safe Operating Procedures 12
- Removing Transport Locks.....13
- Hydraulic Flow Speed..... 13

6. Transporting
- Safe Transport Procedures 14
- Trailer Hitch Coupler..... 14
- Install Transport Locks.....14

7. Troubleshooting
- General Operation..... 15

8. Maintenance & Service
- Safe Maintenance Procedures.....16
- Hydraulic Safety..... 16
- Torque Specifications..... 17
- Initial Maintenance..... 17
- 50 Hour.....17
- Annually.....18
- Tire Safety.....18
- Storage Maintenance.....18
- Removing From Storage.....18
- Gearbox Part Identification Guide.....19
- Gearbox Service/Repair..... 19
  - Disassembly Procedure..... 20
  - Re-assembly Procedure..... 21

9. Hydraulic Routing
- Hydraulic Routing Options 22-33

10. Electrical Components
- Primary Wiring..... 34
- Selector Valve Wiring (Optional)..... 34
- Clearance Light Wiring.....35
- Strobe Light Wiring..... 35

11. Parts
- Front Hitch Components..... 36
- Steering Assembly.....37
- Rear Hitch Components.....38
- Front Cover & Details.....39
- Hydraulic Components.....40
- Driveline Components..... 42
- Gearbox Components.....44

12. Attachments / Accessories..... 45
- Clearance Light Kit, Strobe Light Kit, Solenoid Option, Optional Hitches

13. Warranty.....46

Introduction

WELCOME

Degelman is proud to welcome you to our rapidly increasing family of high quality and dependable product owners. This product was designed and built specifically for you, the customer. Through our research and with your input and feedback, we present to you our 1820 Sidearm offset hitch.

Designed with durability, safety, and performance in mind, the Sidearm is ready for years of quality service. In order to help you keep your Sidearm in top operating condition we have provided you with this manual.

ABOUT THIS MANUAL

This manual has been designed to help you with three extremely important issues: **Operation, Safety, and Maintenance.** It is strongly recommended that you read through the entire manual and review it annually for:

- your own personal safety.
- the safety of others.
- helpful and effective operation techniques.
- maintenance procedures.
- preventative maintenance.

Your authorized Degelman dealer can be contacted for ordering any replacement parts, decals, or manuals. Since many of our parts are specially designed specifically for the Sidearm we strongly recommend you always replace them with genuine Degelman parts only.

This manual and its contents were current at the time of its first printing. To increase product performance and operation, some part modifications and changes may occur that are not reflected in this manual.

Note: *The description "Right"or"Left" as used in this manual is determined by the direction the tractor will travel while in use (unless otherwise stated).*

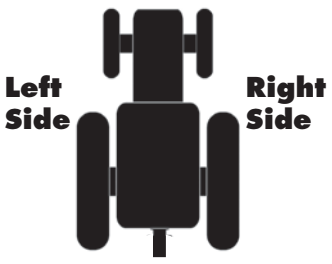

PROOF OF OWNERSHIP

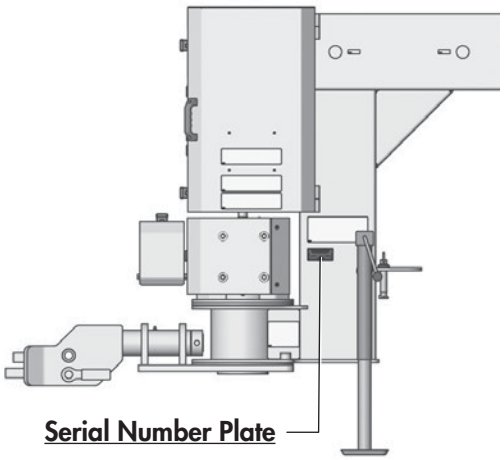

Your **serial number** is found on the serial number plate attached to the Sidearm on the front left side of the Sidearm near the support jack (shown in the photo above).

It is important to record the serial and model number of your Sidearm for proof of ownership and for any required service or maintenance assistance.

Serial Number _____

Owner _____

Model _____

PTO Speed: 1000 RPM

DESCRIPTION

The **1820 Sidearm** offset hitch enables the operator to offset equipment, such as a rotary cutter, side to side behind the tractor in a range of over 27 ft. from left to right (13.5 ft in either direction). This feature enables the operator to drive the tractor on level ground in a more comfortable and safe environment while the Sidearm offsets the equipment where required.

The Sidearm steering is controlled with a 2-1/2" x 16" hydraulic cylinder attached to a main steering arm. This Sidearm is a 1000 PTO model and offers a variety of hydraulic options that can be configured to meet your specific requirements. The Sidearm's four gearboxes, 1:1 ratio, are configured at 90° to each other. This enables the Sidearm to offset and swivel at angles of up to 50° from side to side while limiting stress and wear on the gearboxes and internal drive components.

Why is SAFETY important to YOU?

3 BIG Reasons:

- **Accidents Can Disable and Kill**
- **Accidents Are Costly**
- **Accidents Can Be Avoided**

SAFETY ALERT SYMBOL

The **Safety Alert Symbol** identifies important safety messages applied to the Sidearm 1820 and in this manual. When you see this symbol, be alert to the possibility of **injury or death**. Follow the instructions provided on the safety messages.



The **Safety Alert Symbol** means:

ATTENTION!
BECOME ALERT!
YOUR SAFETY IS INVOLVED!

SIGNAL WORDS

Note the use of the Signal Words: **DANGER**, **WARNING**, and **CAUTION** with the safety messages. The appropriate Signal Word has been selected using the following guidelines:

DANGER

DANGER: Indicates an imminently hazardous situation that, if not avoided, **WILL** result in death or serious injury if proper precautions are not taken.

WARNING

WARNING: Indicates a potentially hazardous situation that, if not avoided, **COULD** result in death or serious injury if proper precautions are not taken.

CAUTION

CAUTION: Indicates a potentially hazardous situation that, if not avoided, **MAY** result in minor or moderate injury if proper practices are not taken, or, serves as a reminder to follow appropriate safety practices.

SAFETY

YOU are responsible for the safe operation and maintenance of your Degelman Sidearm. **YOU** must ensure that you and anyone else who is going to operate, maintain or work around the Sidearm be familiar with the operating and maintenance procedures and related **SAFETY** information contained in this manual.

This manual will take you step-by-step through your working day and alerts you to all good safety practices that should be adhered to while operating this equipment.

Remember, **YOU** are the key to safety. Good safety practices not only protect you but also the people around you. Make these practices a working part of your safety program. Be certain that **EVERYONE** operating this equipment is familiar with the recommended operating and maintenance procedures and follows all the safety precautions. Most accidents can be prevented. Do not risk injury or death by ignoring good safety practices.

- Sidearm owners must give operating instructions to operators or employees before allowing them to operate the Sidearm, and at least annually thereafter per OSHA regulation 1928.51.
- The most important safety device on this equipment is a SAFE operator. It is the operator's responsibility to read and understand ALL Safety and Operating instructions in the manual and to follow these. All accidents can be avoided.
- A person who has not read and understood all operating and safety instructions is not qualified to operate the machine. An untrained operator exposes himself and bystanders to possible serious injury or death.
- Do not modify the equipment in any way. Unauthorized modification may impair the function and/or safety and could affect the life of the equipment.
- Think SAFETY! Work SAFELY!

GENERAL SAFETY

1. Read and understand the Operator's Manual and all safety signs before operating, maintaining or adjusting the Sidearm.



2. Install and properly secure all shields and guards before operating.
3. Have a first-aid kit available for use should the need arise and know how to use it.



4. Have a fire extinguisher available for use should the need arise and know how to use it.



5. Wear appropriate protective gear. This list includes but is not limited to:
   - A hard hat
   - Protective shoes with slip resistant soles
   - Protective glasses or goggles
   - Heavy gloves
   - Wet weather gear
   - Hearing protection
   - Respirator or filter mask

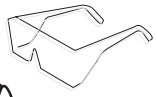



6. Clear the area of people, especially small children, and remove foreign objects from the machine before starting and operating.
7. Do not allow riders.
8. Stop tractor engine, place all controls in neutral, set park brake, remove ignition key and wait for all moving parts to stop before servicing, adjusting, repairing or unplugging.
9. Review safety related items with all operators annually.

Safety

DECALS

The types of decals and locations on the equipment are shown in the illustrations on the following pages.

SAFETY DECALS

⚠ **Important:** Good safety requires that you familiarize yourself with:

- the various Safety Decals
- the type of warning and the area
- the particular function(s) related to the area(s) that requires your SAFETY AWARENESS.

Think SAFETY! Work Safely!

Decal Part #143191-(2)

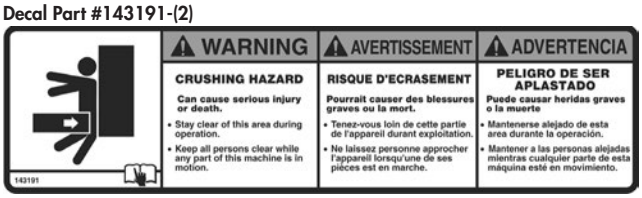

Decal Part #143126-(4)

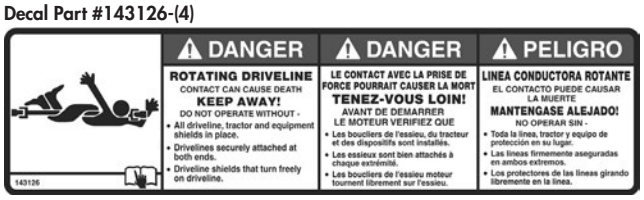

Decal Part #143130-(4)

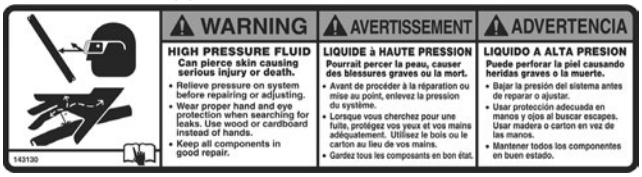

Decal Part #143192-(1)

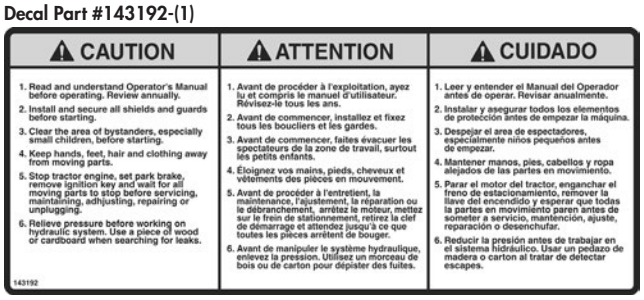

Decal Part #143190-(4)

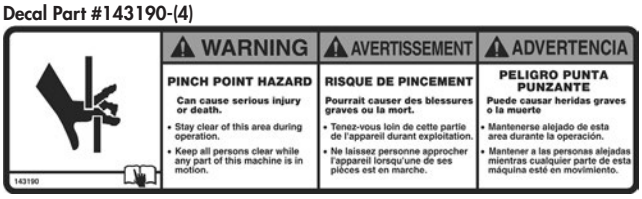

Decal Part #142556 - Reflector, Red - 2 x 9 (2)

Decal Part #142557 - Reflector, Amber - 2 x 9 (6)

Decal Part #142650 - Reflector, Fluorescent - 2 x 9 (2)

INFORMATION DECALS

Decal Part #143182-(1)

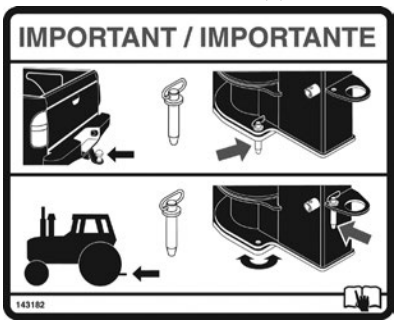

Decal Part #143184-(2)



Decal Part #143193-(1)

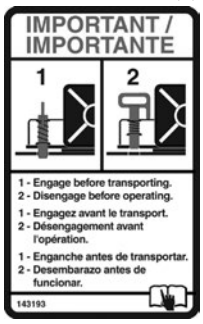

Decal Part #143186-(2)



Decal Part #143195-(1)



Decal Part #143196-(1)



Decal Part #143162-(1)



Decal Part #143183-(1)



Decal Part #143194-(1)



Decal Part #143132-(13)

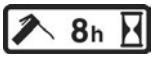

REMEMBER - If Safety Decals have been damaged, removed, become illegible or parts replaced without decals, new decals must be applied. New decals are available from your authorized dealer.

Safety

OTHER DECALS

Decal Part #143180-(2)

Decal Part #143197-(2)

Decal Part #142008-Small (2)
Decal Part #142198-Large (2)

SAFETY DECALS

1. Keep safety decals and signs clean and legible at all times.
2. Replace safety decals and signs that are missing or have become illegible.
3. Replaced parts that displayed a safety sign should also display the current sign.
4. Safety decals or signs are available from your Dealer Parts Department. Safety decals will be available free of charge upon request.

HOW TO INSTALL SAFETY DECALS

- Be sure that the installation area is clean and dry.
- Decide on the exact position before you remove the backing paper.
- Remove the smallest portion of the split backing paper.
- Align the decal over the specified area and carefully press the small portion with the exposed sticky backing in place.
- Slowly peel back the remaining paper and carefully smooth the remaining portion of the decal in place.
- Small air pockets can be pierced with a pin and smoothed out using the piece of decal backing paper.

DECAL LOCATIONS

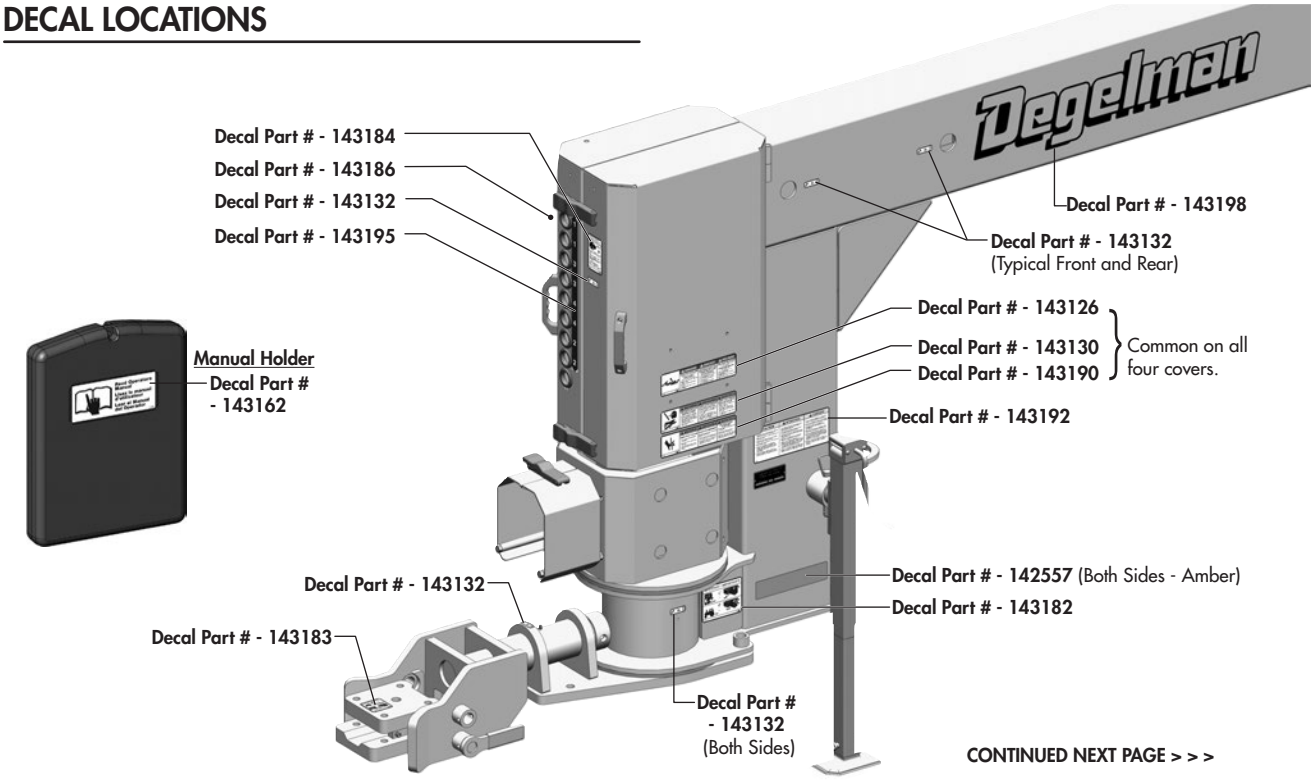

CONTINUED NEXT PAGE > > >

REMEMBER - If Safety Decals have been damaged, removed, become illegible or parts replaced without decals, new decals must be applied. New decals are available from your authorized dealer.

DECAL LOCATIONS

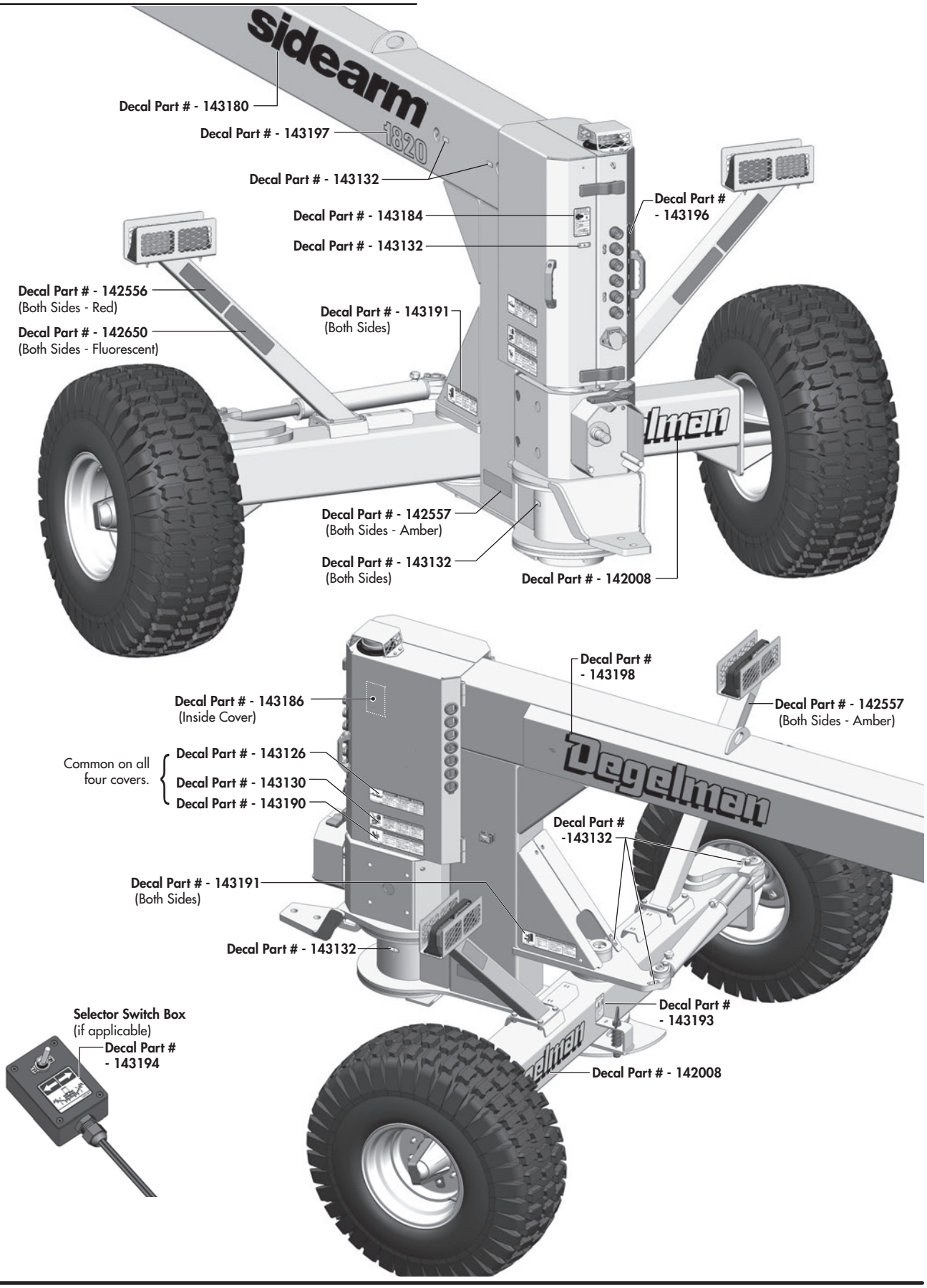

SAFETY SIGN-OFF FORM

Degelman follows the general Safety Standards specified by the American Society of Agricultural Engineers (ASAE) and the Occupational Safety and Health Administration (OSHA). Anyone who will be operating and/or maintaining the Degelman Sidearm must read and clearly understand ALL Safety, Operating and Maintenance information presented in this manual.

Do not operate or allow anyone else to operate this equipment until such information has been reviewed. Annually review this information before the season start-up.

Make these periodic reviews of SAFETY and OPERATION a standard practice for all of your equipment. We feel that an untrained operator is unqualified to operate this machine.

A sign-off sheet is provided for your record keeping to show that all personnel who will be working with the equipment have read and understand the information in the Operator's Manual and have been instructed in the safe operation of the equipment.

SIGN-OFF FORM

Date	Employee Signature	Employers Signature

How To Set Your Tractor

TRACTOR REQUIREMENTS

We recommend a tractor with all of the following requirements:

- A full cab or at least one with ROPS (Rollover Protective System).
- A working seat belt.
- At least 135 PTO HP.
- A sufficient amount of power and weight to adequatly handle the machine.

CORRECT PTO SPEED

The Sidearm offset hitch is available in **only 1000 rpm PTO** speed. Many tractors are equipped with both *540* and 1000 rpm PTO modes. Be sure that the PTO speed of the tractor matches the Sidearm's gearbox speed of 1000 rpm.

Caution: *Under no circumstances should you try to operate a 1000 rpm PTO Sidearm with a 540 rpm PTO tractor.* ***Do not*** *use PTO adapters. PTO adaptors will cause driveline failure and possible tractor damage, it will also invalidate your warranty.*

POSITIONING TRACTOR DRAWBAR

1. Remove drawbar side locking pins and locate drawbar into its center position to prevent it from swinging.
2. Install drawbar locking pins.
3. Remove clevis or hammer strap assembly, if equipped.

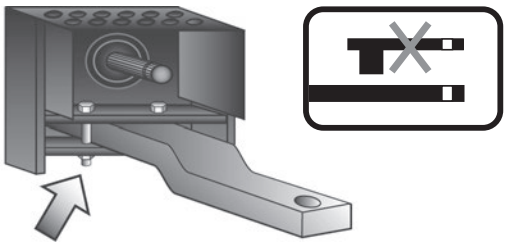

CORRECT DRAWBAR LENGTH

The drawbar pin to PTO shaft end dimension should be set to **16 inches**.

Caution: *Do not use a distance other than 16 inches or equipment damage may result.*

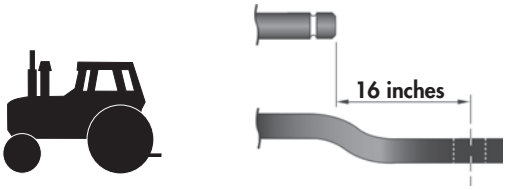

(Please consult your tractor's operator manual for correct drawbar adjustment procedures.)

Caution: *To prevent damage to the tractor drawbar, avoid travelling at high speeds and over rough terrain. Heavy drawn equipment can place excessive strain on the drawbar.*

3 POINT QUICK COUPLER HITCH

Caution: *To prevent machine damage, ensure the 3 point hitch will clear the Sidearm at all angles of operation. You may need to adjust the position of your 3 point hitch.*



HYDRAULIC FLOW SETTING

Caution: *The tractor hydraulic flow setting that controls the Sidearm steering cylinder should be set to* ***minimum****. After practice and learning how to adjust to the responsiveness of the Sidearm steering, this flow setting may be adjusted slightly higher according to user preference.*

(Please refer to the tractor's operator manual for adjusting the hydraulic flow.)

ATTACHING DRAWBAR PLATE

In order to connect the Sidearm to your tractor's drawbar hitch, you must first properly install the correct drawbar hitch plate assembly onto the tractor's drawbar.

There are two optional hitch plate adapters:

502064 - For up to 3" Wide Drawbars

502232 - For 4" to 5" Wide Drawbars

Ensure you have the proper adapter for the width of your drawbar. In the example shown, the 3" Drawbar is being installed. Use the same procedure for the 4" to 5" adapter as well.

Note: *Please ensure the drawbar hammer strap has been removed and stored if applicable, and the hitch has been properly positioned according to the procedures in the "How to Set Your Tractor" section of this manual.*

1. The first step is to position the top plate on top of the drawbar hitch.

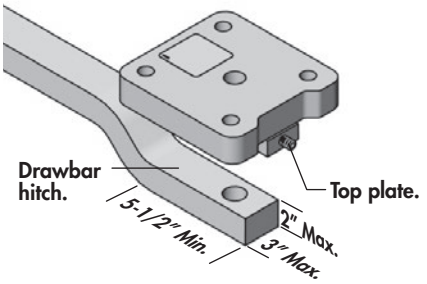

2. Then, using a 1/4" allen wrench, adjust the set screw until the rear edge of the center hole is in line with the rear edge of the drawbar hole. This ensures the bolt pin is being properly pulled by the drawbar hitch.

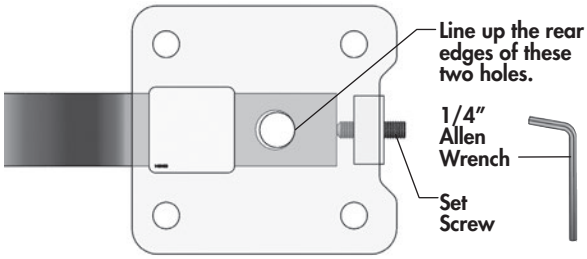

3. Now, loosely install the bottom plate using the 1" bolt, lock washer and nut.

You may wish to snug up the this bolt but do not fully tighten.

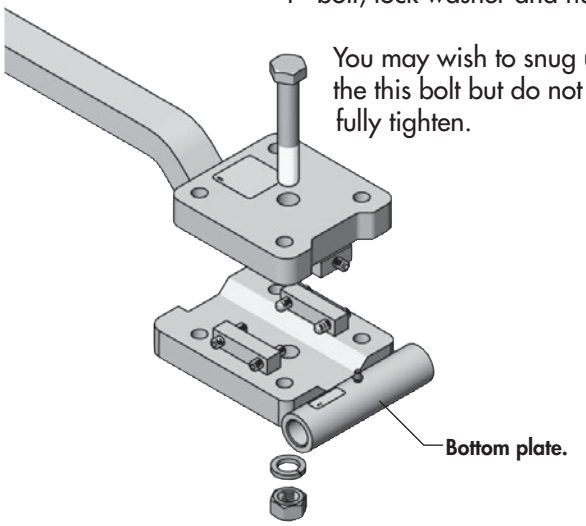

4. Adjust the side set screws to center the bottom plate on the drawbar hitch. The bottom edges of the drawbar may contact the sloped edges of the bottom plate.

Fully tighten the 1" bolt.

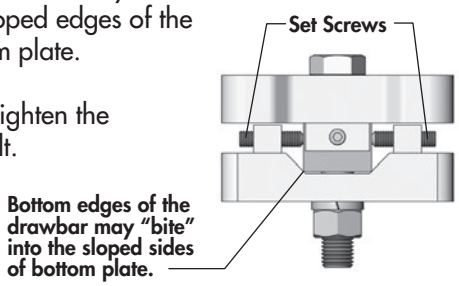

5. Install the 3/4" bolts, lock washers, and nuts and tighten in the order shown. Tighten all bolts to the proper torque specifications listed in the maintenance section of this manual.

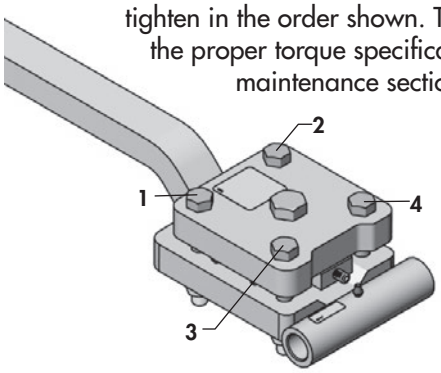

Important: *Remember to re-torque all bolts after the first day of operation to eliminate any movement due to initial use.*

How To Hook-Up Your Sidearm

ATTACHING SIDEARM TO TRACTOR

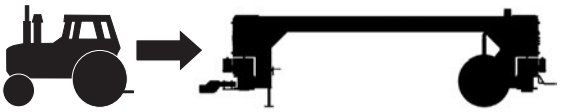

Follow this attachment procedure at all times:

1. Clear the area of bystanders, especially small children, before starting.

2. Be sure there is enough room to back the tractor up to the machine.

3. Start the tractor and slowly back it up into the Sidearm swivel hitch.

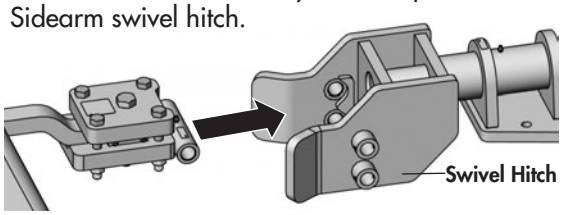

4. Stop the tractor, place all controls in neutral, set park brake and remove ignition key before dismounting.

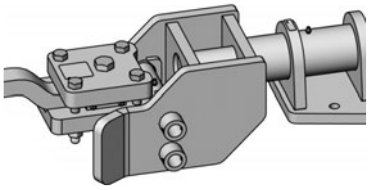

5. Use the Sidearm hitch jack to raise or lower the hitch to align with the drawbar hitch plate assembly.

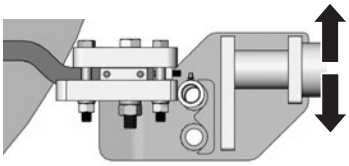

Note: *Typically, the top hole setting is used and recommended. In severe angle ditch cutting, you may wish to raise the machine by locating the drawbar pin in the lower hitch hole.*

6. Install the drawbar pin and lock pin.

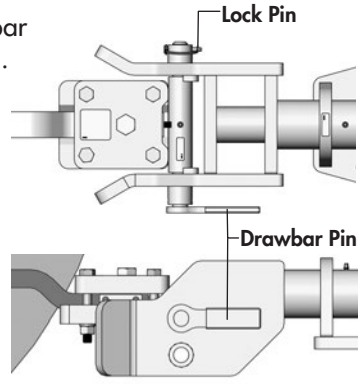

Important:

• Check the operating angle of your driveline from the tractor PTO to the front Sidearm gearbox. The greater the angle, the quicker the driveline wears at the cross joint connections. You may even hear noise from these connections. Due to the variance in drawbar to PTO heights from many tractor manufacturers, it is difficult to set a standard configuration for hitch heights. The typical rule of thumb is the lower the hitch setting the easier it is on the driveline (less angle). However, in severe ditch angles, you may need to raise this hitch height.

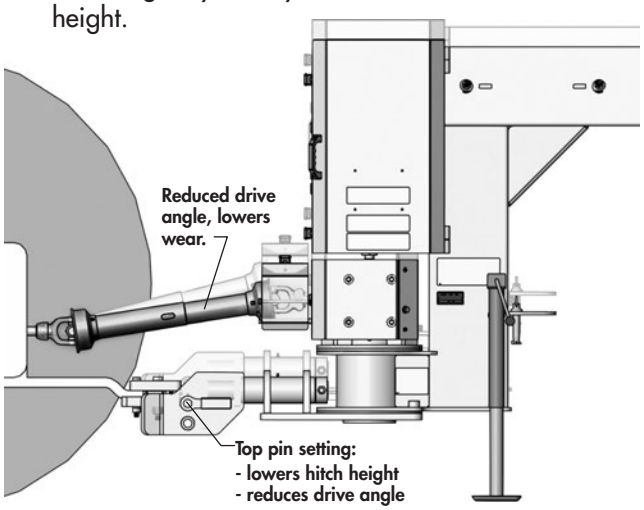

INSTALLING SAFETY CHAIN

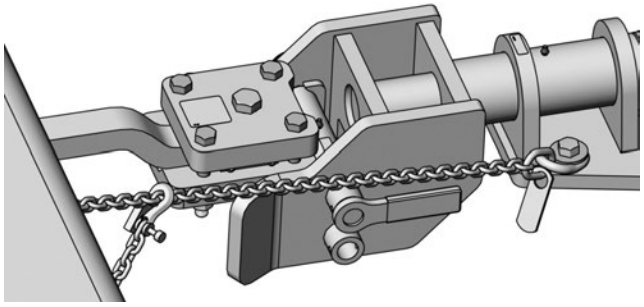

• Install the safety chain between the tractor drawbar cage and the Sidearm hitch.

• Provide only enough slack in chain to permit hitch to swivel.

• Fasten chain back to itself with hook latch and ensure chain is properly and securely attached.

Caution: *Do not use safety chain by itself for towing. Replace entire chain if any link or end fitting is broken, stretched or otherwise deformed. If replacing, use a chain with the strength rating greater than the combined gross weight of the Sidearm and any attached equipment (ie. rotary cutter).*

How To Hook-Up Your Sidearm

ATTACHING PTO DRIVELINE

Danger: *Shut off tractor engine before attaching PTO driveline. Entanglement in rotating driveline can cause serious injury or death.*

1. Shut off tractor engine and remove key.
2. Check that the driveline telescopes easily and that the shield rotates freely.
3. Lift tractor PTO shield.
4. Support driveline, pull back on collar, align splines by rotating cutter driveline, and push driveline onto tractor PTO shaft until collar snaps into place.
5. Push and pull yoke several times to ensure driveline is locked. Do not pull collar, as this will release the lock.
6. Lower tractor PTO shield back into place.

Caution: *Under no circumstances should you try to operate a 1000 rpm PTO Sidearm with a 540 rpm PTO tractor.* ***Do not*** *use PTO adapters. PTO adaptors will cause driveline failure and possible tractor damage, it will also invalidate your warranty.*

ATTACHING HYDRAULICS

1. Clean off dust covers and ends of hoses.
2. Firmly push in appropriate hoses into tractor receptacles according to user preference.
3. Secure hoses as to not interfere with or contact moving parts. Use the included hose take up assemblies to help secure the hoses, front and back. *(Photo of Sidearm may differ from the current model).*

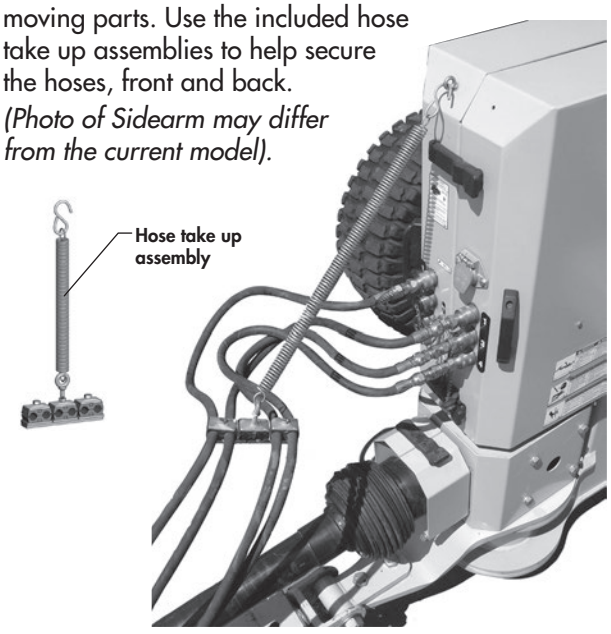

CONNECTING LIGHTS

1. Connect Sidearm electrical plug into appropriate tractor receptacle.
2. Ensure cable does not interfere with or contact moving parts.

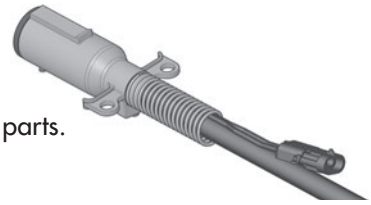

INSTALL SWITCH BOX (selector valve option)

If your Sidearm is equipped with the selector valve option you will need to route the switch box into the tractor cab. It plugs into the female connector end connected to the electrical plug (refer to electrical plug image above).

There is an adhesive Velcro strip on the bottom of the switch box that can be used to help position the box in a comfortable location.

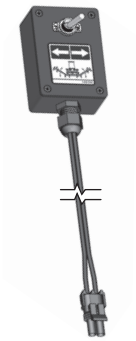

Important: *There is always power to the switch box. In order to prevent battery drain be sure to toggle the switch to the* ***off*** *position when not in use.*

SAFE OPERATING PROCEDURES

⚠ Danger:

- Never allow untrained or inexperienced persons to operate this equipment.
- Before leaving seat: Set brake, stop engine, remove key and wait until all moving parts have stopped.
- Perform routine inspections and corrective/ preventative maintenance. Keep all shields and guards in place.
- Never allow persons to ride on the tractor or Sidearm. Never allow children to operate tractor or Sidearm.
- Never attempt to operate controls unless properly seated in the tractor seat with seat belt fastened.
- Never dismount a tractor that is moving, or attempt to mount a moving tractor.
- Clear the area of bystanders, especially children, before starting.

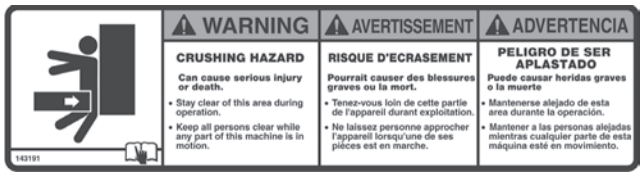

- Never adjust machine while in motion.

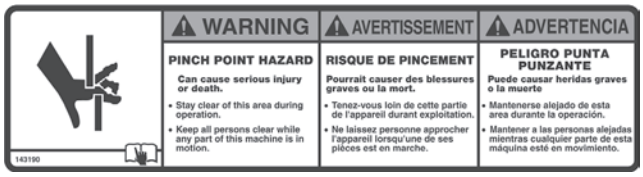

- **Stay clear of rotating or moving parts!** Contact or entanglement with moving/rotating parts may result in serious injury or death.

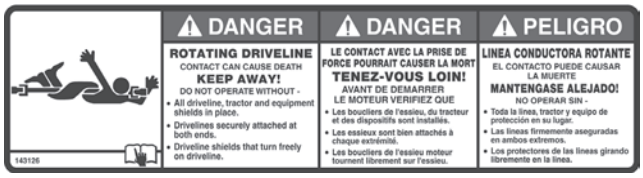

- Operate only with tractor equipped with ROPS (Roll Over Protective System) and seatbelts.
- Ensure tractor PTO speed (1000 rpm) matches the 1000 rpm Sidearm gearbox speed or drive components can be damaged.
- Operate tractor at rated PTO speed. Machine may not perform properly if engine speed is too fast or too slow. Excessive PTO speeds may cause driveline failures that may result in serious injury or death.
- Familiarize yourself with stopping the tractor and equipment quickly in case of a sudden emergency.
- To avoid tractor and equipment damage, do not turn too tight. Be sure that the tractor tires do not contact Sidearm or the Sidearm tires contact attached equipment (i.e. rotary cutter).
- Slowly steer Sidearm down ditches.
- Be careful when operating machine on steep side hills or slopes. Avoid excessively steep slopes to avoid possible equipment damage.
- Slow down and carefully steer around road obstacles.
- Normal ground speed range is 0 to 5 mph (8 km/h). Use slower speeds when operating on or near steep slopes, ditches, drop-offs, rough terrain, overhead obstructions, power lines, or when avoiding obstacles and other foreign debris.
- Never operate Sidearm in conditions of poor visibility such as fog, darkness, or any conditions that limit your clear visibility to less than 300ft (100m) in front of and to the sides of the Sidearm.

PREPARATION CHECKLIST ☑

- ☐ Read and understand the Sidearm Operator's Manual and all safety decals.
- ☐ Check that all safety guards and shields are in place and secure.
- ☐ Lubricate all grease fittings and check the oil level in all gear cases. (Refer to the "Maintenance" section)
- ☐ Check that all hardware is in place and properly tightened. (Refer to the "Maintenance" section)
- ☐ Inspect all tires and check that they are in proper working condition. (Refer to the "Maintenance" section)

REMOVING TRANSPORT LOCKS

⚠ **Caution:** *To avoid possible machine damage, the transport pin and swivel lock pin must be disengaged prior to operation in order for Sidearm to operate and steer properly.*

1. Park Sidearm and tractor on level ground.
2. Engage tractor parking brake and/or place transmission into "Park".
3. Shut off tractor engine and remove ignition key.
4. Disengage **both** the transport pin **and** the swivel lock pin.
5. Place pins into proper storage positions.

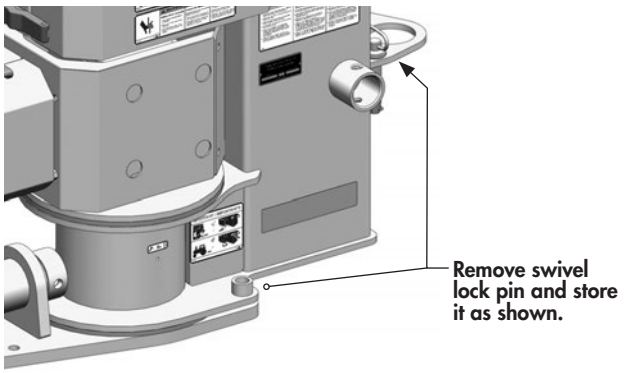

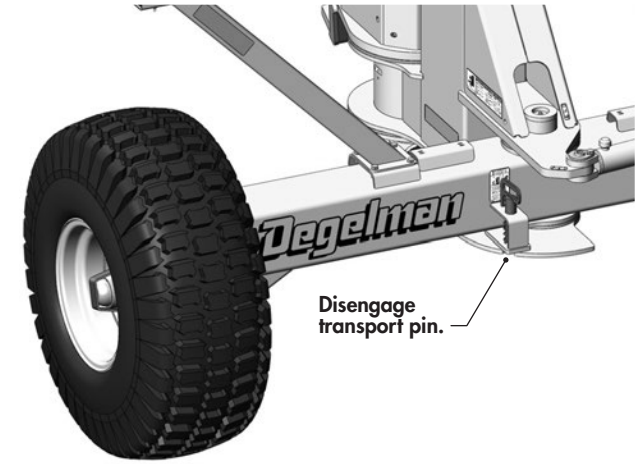

BEGINNING OPERATION

When operators begin use of the Sidearm for the first time, they should start out slowly and take time to practice and learn how to adjust to the Sidearm's speed, steering response, turning, maneuvering, and backing up.

⚠ **Caution:** *The tractor hydraulic flow setting that controls the Sidearm steering cylinder should be set to **minimum**. After practice and learning how to adjust to the responsiveness of the Sidearm steering, this flow setting may be adjusted slightly higher according to user preference.*

(Please refer to the tractor's operator manual for adjusting the hydraulic flow.)

Transporting

SAFE TRANSPORT PROCEDURES

Danger: *To prevent serious injury or death to you and others, always follow recommended safe transport procedures:*

- When transporting Sidearm always install transport lock pin and swivel lock pin.

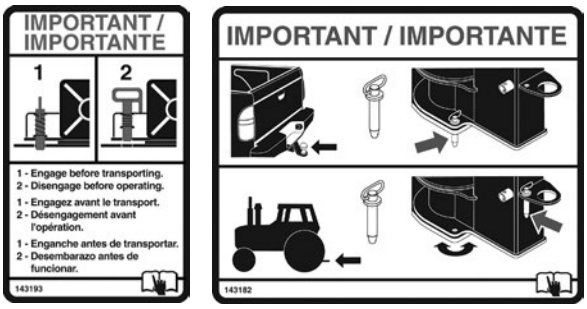

- Ensure Safety Chain and all components are properly and securely attached. (Refer to the "Installing Safety Chain" section)
- Ensure all lights are working and visible as required by federal, provincial/state, and local laws. Ensure all reflectors are clean and visible.
- Use flashing warning lights when travelling on public roads day or night, unless prohibited by law.
- When towing, travel at a reasonable and safe speed. Never travel at a speed which does not allow adequate control of steering and stopping. Do not travel at speeds greater than that recommended by the tire manufacturer.
- Check with local authorities regarding machine transport on public roads. Obey applicable laws and regulations.
- Keep to the right and yield the right-of-way to allow faster traffic to pass. Drive on the shoulder, if permitted by law.
- Stop slowly.
- Use caution when making corners or meeting traffic.
- Reduce ground speed when turning.
- Reduce speed considerably when travelling over rough terrain.
- Beware of oncoming traffic and roadside obstructions.
- Stay clear of any large bumps or deep depressions.
- Avoid possible loss of control or tractor overturn. Tow only with correctly ballasted tractor.

TRAILER HITCH COUPLER (Optional)

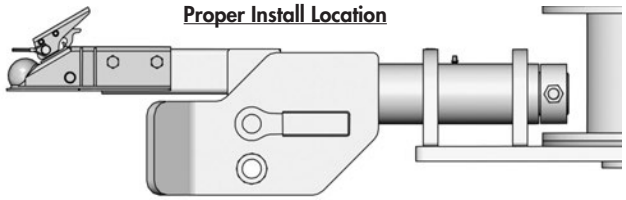

- When transporting Sidearm with trailer hitch coupler, always install safety chain properly and securely to the towing vehicle. Also, ensure trailer hitch coupler lock pin is properly installed.
- Install the Sidearm transport lock pin and swivel lock pin.
- Follow the safe transport procedures.

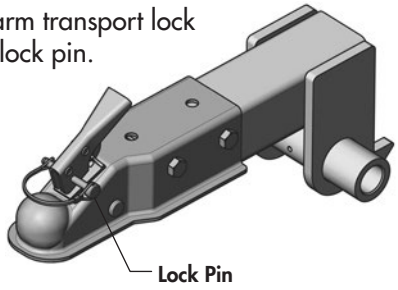

INSTALL TRANSPORT LOCKS

Caution: *To avoid possible machine damage and transport hazard, engage the transport pin and swivel lock pin prior to transport to prevent unit from swinging out of alignment.*

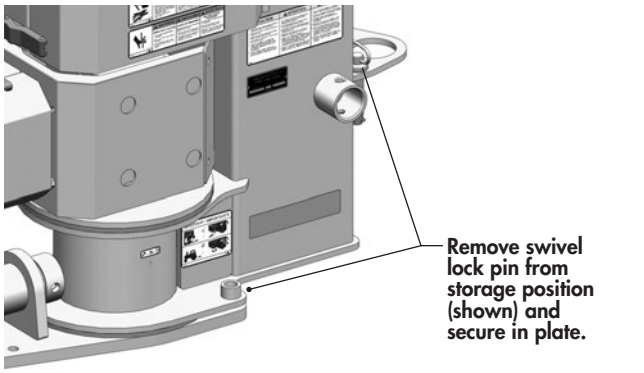

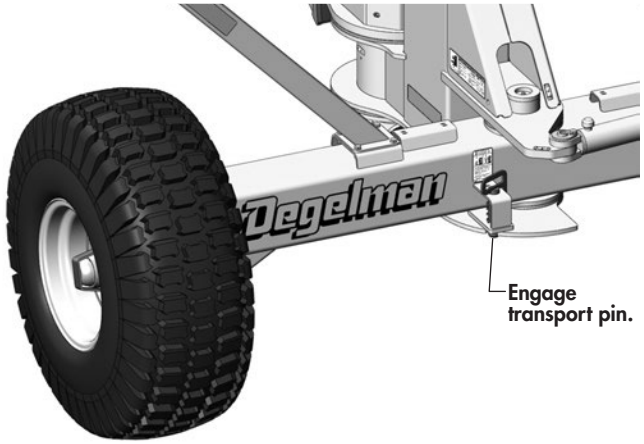

Troubleshooting

The following section is a list of the most common troubleshooting questions. If you do not find the answer to your question here, try reviewing your manual. If you still cannot find a solution, please contact your Degelman service department.

1. I have the solenoid option, but my switch box isn't working?

• Check all connections are properly connected from the switch box to the primary electrical plug.

• If this doesn't work, check if the center *(blue)* wire on the **tractor electrical socket** is live. In some tractor models this wire may not be installed. If this is the case, you have a couple of options. You can properly install a wire *(preferred method*) **or** you can relocate the wire from the center *(blue)* slot on the Sidearm **front cable plug assembly** to the *brown* slot. The tractor will then have to run with the flasher/clearance lights on in order to activate the switch. (Refer to the "Electrical Components" section for Primary wiring).

2. I have the solenoid option and I seem to get a battery drain from my Sidearm.

• There is always power to the switch box. In order to prevent battery drain be sure to toggle the switch to the **off** position when not in use.



3. I find it difficult to steer the Sidearm because it reacts too quickly.

• Check the Hydraulic Flow Setting on the tractor hydraulic outlet that controls the Sidearm steering cylinder. The setting should be set to **minimum.** After practice and learning how to adjust to the responsiveness of the Sidearm steering, this flow may be adjusted slightly higher according to user preference.

4. There seems to be a slight "shimmy" in the steering beam. Is this normal?

• Some shimmy is normal due to required manufacturing tolerances in the hydraulic cylinder pins. If this becomes excessive, you may need to replace the spring steel bushings in the cylinder lug holes.

5. There seems to be some oil leaking/escaping from the gearbox. Why?

• Some oil loss may occur through vent relief valve located on the top of the gearbox when operating the Sidearm. This is normal due to the range of angles the Sidearm reaches when cutting ditches.

• A consistent loss of oil may indicate damaged seals. Damaged seal should be replaced immediately to prevent damage to the gearbox. Refer to the maintenance section of this manual.

6. My front driveline is damaged prematurely.

• Check to see if your PTO shaft end to drawbar hitch pin hole distance is properly set to 16 inches. If this distance is less than 16 inches, serious damage may or may have already occurred to front gearbox, driveline, or tractor PTO. If this distance is too close (less than 16 inches), the driveline could fully retract when climbing a ditch and force extreme pressure on the gearbox or the tractor PTO.

• Check the operating angle of your driveline from the tractor PTO to the front Sidearm gearbox. The greater the angle, the quicker the driveline wears at the cross joint connections. You may even hear noise from these connections. Due to the variance in drawbar to PTO heights from many tractor manufacturers, it is difficult to set a standard configuration for hitch heights. The typical rule of thumb is the lower the hitch setting the easier it is on the driveline (less angle). However, in severe ditch angles, you may need to raise this hitch height.

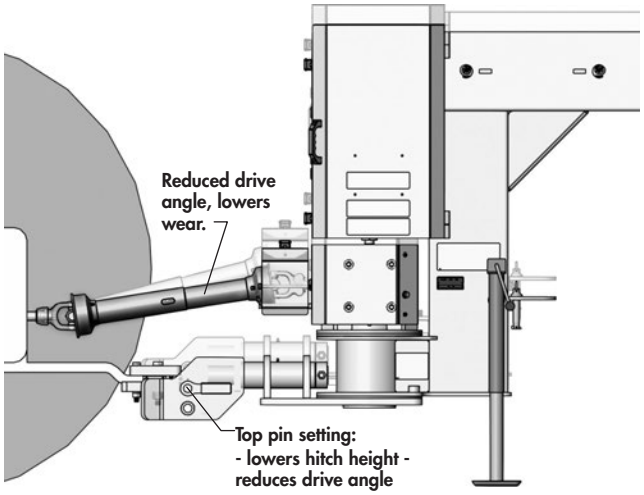

SAFE MAINTENANCE PROCEDURES

Before adjusting or servicing a Sidearm connected to a tractor:

1. Park Sidearm and tractor on level ground.
2. Engage tractor parking brake and/or place transmission into "Park".
3. Disengage PTO.
4. Engage tractor parking brake and/or place transmission into "Park".
5. Relieve pressure in hydraulic system. (See tractor Operator's Manual).
6. Shut off tractor engine and remove ignition key.
7. Ensure all moving parts have stopped, then remove PTO driveline from tractor.

Danger: *To prevent serious injury or death to you or others, and to prevent damage to your equipment, always follow these safety messages:*

- To prevent personal injury from unexpected movement, ensure Sidearm is properly supported and on a level surface before performing any service work.
- Always relieve pressure before disconnecting or working on hydraulic system.
- Do not make or allow any alterations or modifications to the Sidearm, its components, or its functions.
- Never lubricate, adjust, or service machine while it is moving. Ensure tractor engine is off, all moving parts have stopped, and the PTO driveline has been disconnected before servicing.
- Ensure all guards, shielding, and their components are maintained and in proper working condition. Replace or repair any damaged components.
- Ensure all guards, shielding, and their components are replaced and secured after service is complete.
- Maintain the product safety decals and replace any decals that are damaged, missing or unreadable.

HYDRAULIC SAFETY

1. Always place all tractor hydraulic controls in neutral before dismounting.
2. Always relieve pressure before disconnecting or working on hydraulic system.
3. Make sure that all components in the hydraulic system are kept in good condition and are clean.
4. Replace any worn, cut, abraded, flattened or crimped hoses and metal lines.
5. Do not attempt any makeshift repairs to the hydraulic lines, fittings or hoses by using tape, clamps or cements. The hydraulic system operates under extremely high-pressure. Such repairs can fail suddenly and create a hazardous and unsafe condition.
6. Wear proper hand and eye protection when searching for a high-pressure hydraulic leak. Use a piece of wood or cardboard as a backstop instead of hands to isolate and identify a leak.



7. If injured by a concentrated high-pressure stream of hydraulic fluid, seek medical attention immediately. Serious infection or toxic reaction can develop from hydraulic fluid piercing the skin surface.
8. Before applying pressure to the system, make sure all components are tight and that lines, hoses and couplings are not damaged.

Think SAFETY! Work SAFELY!

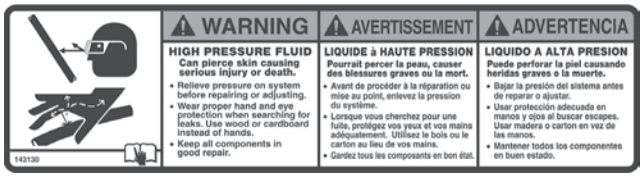

Warning: *High pressure fluid can pierce skin causing serious injury or death. Relieve pressure on system before repairing or adjusting. Wear proper hand and eye protection when searching for leaks. Use wood or cardboard instead of hands. Keep all components in good repair.*

TORQUE SPECIFICATIONS

IMPERIAL TORQUE SPECIFICATIONS

(based on "Zinc Plated" values)

Size	Grade 5	Grade 8
	lb.ft (*N.m*)	lb.ft (*N.m*)
1/4"	**7 (*10*)**	**10 (*14*)**
5/16"	15 (*20*)	20 (*28*)
3/8"	**25 (*35*)**	**35 (*50*)**
7/16"	40 (*55*)	60 (*80*)
1/2"	**65 (*90*)**	**90 (*120*)**
9/16"	90 (*125*)	130 (*175*)
5/8"	**130 (*175*)**	**180 (*245*)**
3/4"	230 (*310*)	320 (*435*)
7/8"	**365 (*495*)**	**515 (*700*)**
1"	550 (*745*)	770 (*1050*)
1-1/8"	**675 (*915*)**	**1095 (*1485*)**
1-1/4"	950 (*1290*)	1545 (*2095*)
1-3/8"	**1250 (*1695*)**	**2025 (*2745*)**
1-1/2"	1650 (*2245*)	2690 (*3645*)



Caution: Torque values listed below are for general use only. If a different torque value or tightening procedure is specified for a specific application, do not use these values.

- Refer to the "Parts" section for proper grade and length of bolts for replacement parts. All hardware is "GR5 UNC Plated" unless stated otherwise.
- Do not replace locknuts with nuts and lock washers. Replace with all parts with original, specified parts only.
- Dry values shown mean the bolt/nut is plain or zinc plated without any lubrication.

INITIAL MAINTENANCE

- Check oil level in all gearcases (on level ground). Use SAE 80W/90 gear oil.
- Grease all drive components and pins as shown for 8 hour maintenance.
- Visually inspect machine for any loose or improperly fastened hardware or components. Retighten and retorque as required.

8 HOURS

- Visually inspect machine for damage and leaks. Repair or replace damaged parts as required.
- Grease all drive components and pins as shown.
- Re-torque all gearbox bolts. **(Use *loctite 242* if replacing)**

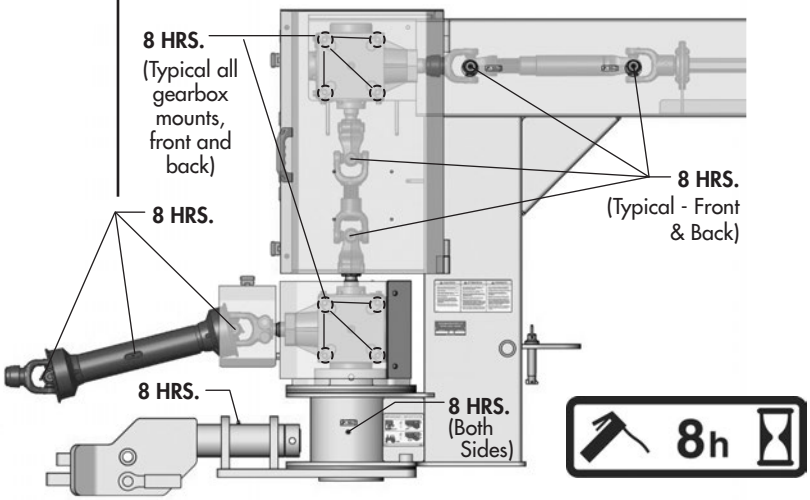

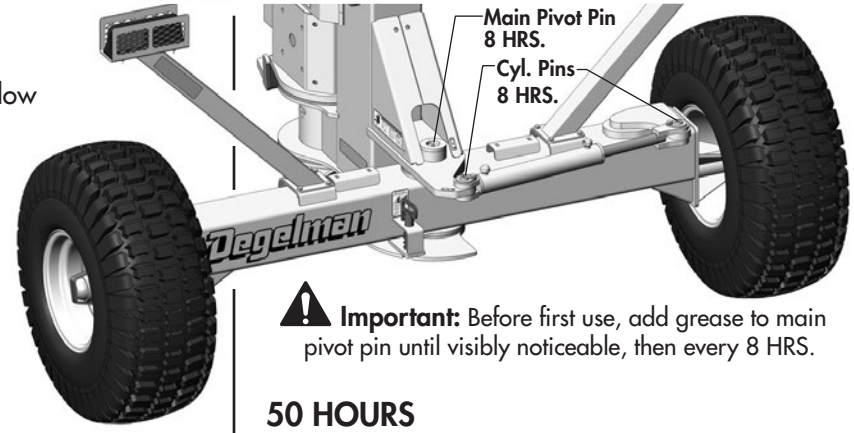

Important: Before first use, add grease to main pivot pin until visibly noticeable, then every 8 HRS.

50 HOURS

- Check oil level in all gearcases (on level ground). Use SAE 80W/90 gear oil or SAE 80W/140 Synthetic gear oil whichever is being used.
- Replace the oil in new gearboxes after the initial 50 hours of use. Then continue to replace the oil annually. After first oil change, to reduce oil temperatures and prolong gear box life we recommend a synthetic gear oil (SAE 80W/140 Synthetic).



Caution: *A consistent loss of oil can indicate damaged seals. Damaged seals should be replaced immediately to prevent ruining the gearbox.*

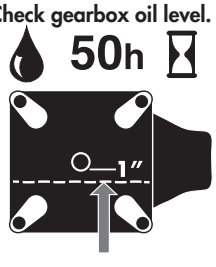

ANNUALLY

- It is recommended that hubs are dismantled, cleaned, inspected, and repacked every year. Whenever a worn or damaged seal is replaced it is also recommended that the bearing assembly be cleaned and repacked with wheel grease.
- Grease axle hub bearings.



- Check tire pressure. (32-35 psi.)
- Check all gearbox seals for leaks. Replace as required.
- Replace oil in all gearboxes.
- The shielding on the driveline should be removed and the old grease should be removed with a solvent.
- Check the condition of cylinder pins, lock pins, and other bolts and hardware. Replace or re-torque if necessary.
- Inspect all hydraulic hoses for cracks, wear, and leaks. Ensure to follow instructions under hydraulic safety section.

TIRE SAFETY

1. Failure to follow proper procedures when mounting a tire on a wheel or rim can produce a blow out which may result in serious injury or death.
2. Do not attempt to mount a tire unless you have the proper equipment and experience to do the job.
3. Have a qualified tire dealer or repair serviceman perform required tire maintenance.
4. Ensure tires are inflated to recommended pressure (32-35 psi)

Danger: *Excessive transport speed can cause tires to fail and can result in property damage, serious injury, or death. Do not exceed tire manufacture's recommended speeds.*

STORAGE MAINTENANCE

When storing the Sidearm for the season or an extended period of time it is important to follow the following procedures in order to extend the life of your Sidearm.

1. Thoroughly clean off Sidearm of all debris and dirt buildup. Debris and dirt will draw moisture and may cause corrosion.
2. Paint all parts where necessary.

   Note: *Degelman Yellow Aerosol paint (#133044) is available, ask your dealer.*
3. Store Sidearm in a dry and shaded place.
4. Follow procedures in the Maintenance section to fully lubricate the machine.
5. Inspect the safety shields, guards, transport locks, and other components for damage, wear, or missing hardware. Replace if required.
6. Inspect hydraulic hoses and connections. Repair or replace as necessary.
7. Inspect the condition of safety labels and decals. Replace any missing or illegible decals.
8. Remove PTO front half and place in the PTO cradle. Keep PTO off ground.
9. Apply grease to any exposed hydraulic cylinder rods and any threaded adjustment screws to prevent rusting.

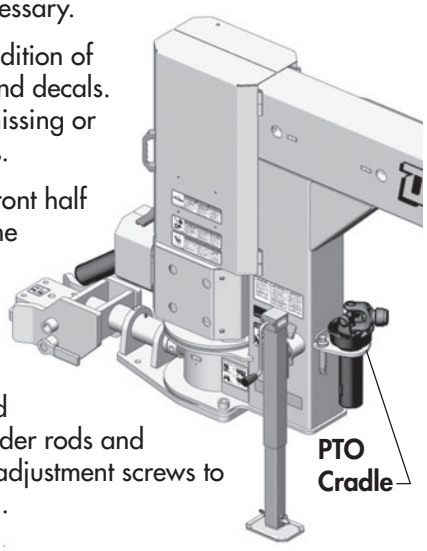

REMOVING FROM STORAGE

1. Review Operator's Manual and check adjustments.
2. Follow procedures in the Maintenance section to check gearbox oil levels and to fully lubricate the machine.
3. Inspect hydraulic hoses and connections. Repair or replace as necessary.
4. Check all hardware for tightness.
5. If any major components have been replaced, make sure they run properly.

GEARBOX PART IDENTIFICATION GUIDE

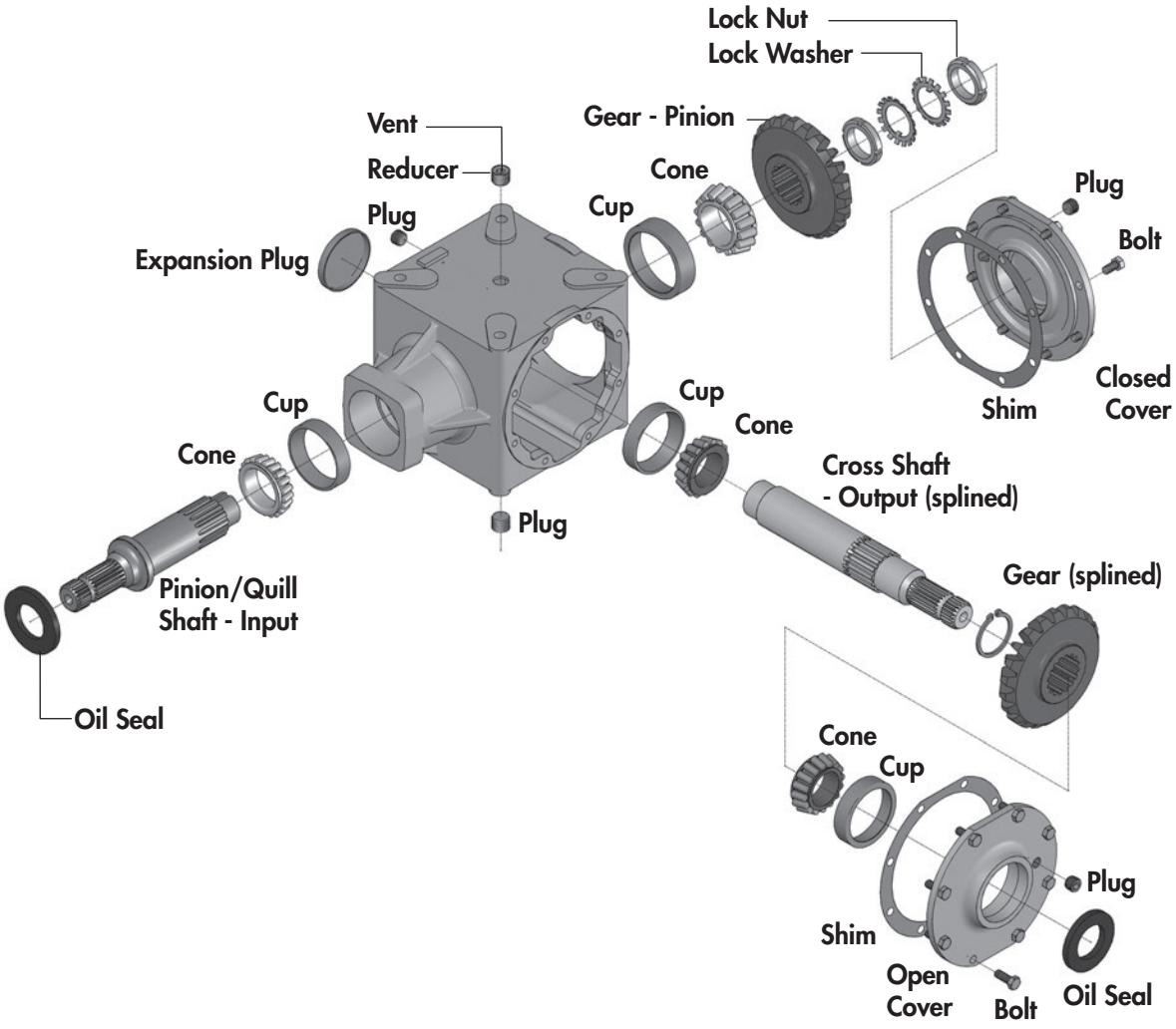

GEARBOX SERVICE/REPAIR

- Use SAE 80W/90 or SAE 80W/140 Synthetic gear oil (Synthetic gear oil reduces oil temperature).
- Replace the oil in new gearboxes after the initial 50 hours of use. Then continue to replace the oil annually. After first oil change, to reduce oil temperatures and prolong gear box life we recommend a synthetic gear oil (SAE 80W/140 Synthetic).

Caution: *A consistent loss of oil can indicate damaged seals. Damaged seals should be replaced immediately to prevent ruining the gearbox.*

Note: Some oil loss may occur through vent relief valve located on the top of the gearbox when operating Sidearm. This is normal due to the range of angles the Sidearm reaches when cutting ditches.

- Re-torque all gearbox mount bolts every 8 hrs. (Use *loctite 242* if replacing)
- Gearbox oil level should be checked with Sidearm on level ground.
- The oil level should be kept at approximately 1″ below the plug hole as shown in the diagram below.

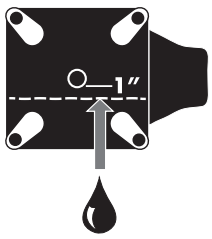



GEARBOX SERVICE & REPAIR

DISASSEMBLY PROCEDURE

1. Cross Shaft Removal

- Remove the 8 bolts and the open cover *(cover with opening for shaft)*.

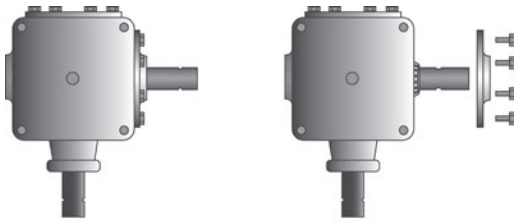

- Remove the cross shaft assembly. Pull off bearings and replace with new ones.

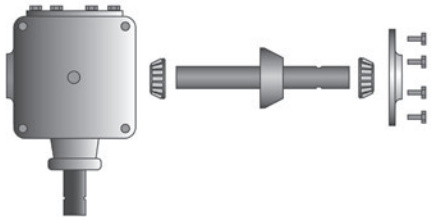

(**NOTE:** *Take care to remember the positioning of any shims - if applicable.*)

- Leave cross shaft assembly to the side.

2. Pinion Shaft Removal

- **IMPORTANT:** The *cross shaft* must be removed prior to the removal of the **pinion shaft**.

- Remove the 8 bolts and closed cover.

(**NOTE:** *Take care to remember the positioning of any shims - if applicable.*)

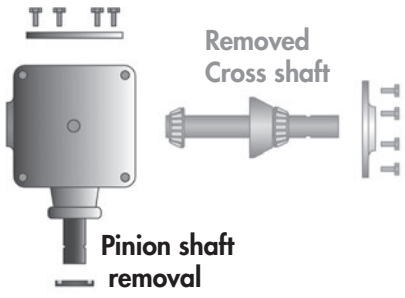

- To pull out shaft, you must first remove the oil seal. Since the seal will need to be replaced, you may use a sharp object such as a screwdriver to poke a hole into the seal and pry out.

- From inside the gearbox, remove the lock nuts and locking washers that secure the gear to the pinion shaft.

- Remove gear and inner bearing.

- Slide the Pinion Shaft out from front and remove outer bearing.

(*Leave pinion shaft assembly parts to the side taking note of proper part placement for later assembly.*)

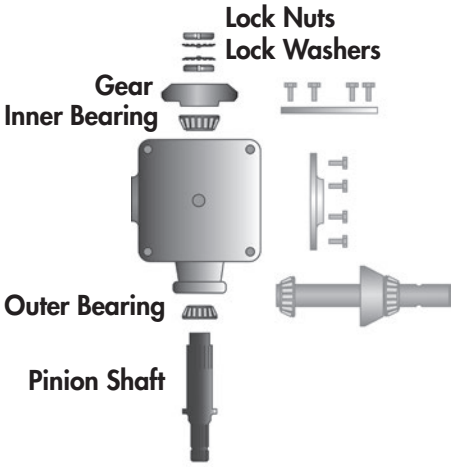

3. To Service/Replace Seals

- To replace a seal or expansion plug, tap it out from the inside.

4. To Service/Replace Bearing Cups

- Using a long object such as a bar or pipe and a hammer, knock the cups out by tapping along the outer edges. Alternate sides when tapping cup.

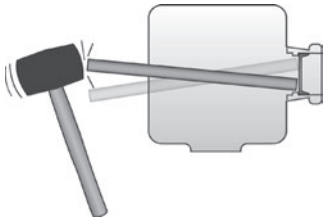

RE-ASSEMBLY PROCEDURE

1. Replace Bearing Cups

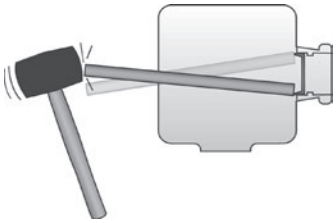

- Using a long object such as a bar or pipe and a hammer, tap the cups into place along the outer edges. Alternate sides when tapping cup.

(**NOTE:** This procedure must be completed carefully so you do not damage any parts.)

2. Install Pinion Shaft Assembly

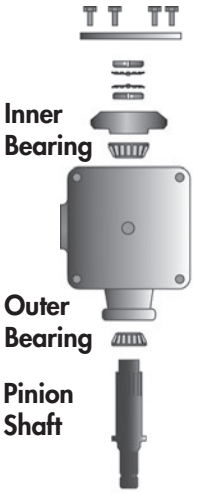

- Install outer bearing onto pinion shaft.

- Install pinion shaft into gearbox. Install inner bearing onto shaft.

- Install gear onto shaft followed by the lock nuts and locking washer.

- Replace the closed cover shim(s) and then position cover in place.

- Install closed cover bolts.

3. Install Cross Shaft Assembly

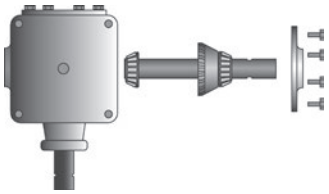

- Install new bearings.

- Position washer and shims (if applicable), turn gearbox onto its side, and then insert assembly into position.

- Replace the open cap/cover shim(s) and then position open cap into place.

- Install cap/cover bolts.

- After gearbox is assembled make sure it turns freely and that it has backlash in between the gears. (Backlash should be between .005 to .010)

(**NOTE:** If there is too much or too little backlash, follow the procedure for adjusting shims.)

4. Install Seals

- For both shafts, carefully slide the seal over the shaft and gently hit the seal side to side until it is in place.

- Install the expansion plug by gently hit the plug side to side until it is in place.

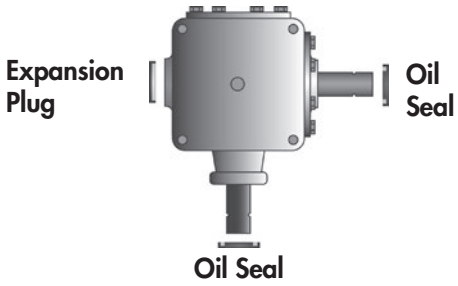

PROCEDURE TO SHIM CROSS SHAFT

Shim a Cross Shaft

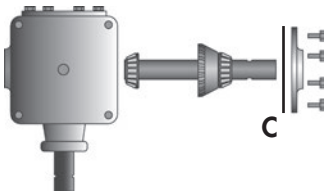

To shim a cross shaft, place sub assembly into gearbox. Using cover shim ("C"), place shim on top of face of gearbox then place cap on top and bolt down.

If shaft is too tight add more shims. When adding shims, add one at a time and try to turn the shaft. Same as the pinion shaft, make sure there isn't any end play (up & down) and no side-to-side movement in the shaft.

If shaft is too loose, remove a shim or two to tighten up. Also, make sure there isn't any notchy feeling in the bearings (means it's too tight). When proper set is achieved, apply sealant to bearing caps and tighten.

Hydraulic Routing

The following section identifies and explains the options available in regards to the hydraulic routings for your tractor, Sidearm, and cutter configurations. The chart below is used to help direct you to the proper routing option for your specific arrangement (please refer to the page number beside the option number).

	Hydraulic Options					
Option Number	**Tractor Outlets**	**Wing Flow**	**Wing Motion**	**Selector Valve**	**Cutter Size**	**Comments**
1 (pg.23)	4	Double Acting	Independent (not teed)	No	15 ft.	
2 (pg.24)	4	Single Acting	Independent (not teed)	No	15 ft.	
3 (pg.25)	3 or 4	Double Acting	Combined (teed)	No	15 ft.	
4 (pg.26)	3 or 4	Single Acting	Combined (teed)	No	15 ft.	
5 (pg.27)	3	Double Acting	Independent (not teed)	**Yes**	15 ft.	
6 (pg.28)	3	Single Acting	Independent (not teed)	**Yes**	15 ft.	
7 (pg.29)	2	Double Acting	Combined (teed)	**Yes**	15 ft.	
8 (pg.30)	2	Double Acting	Single Wing	**Yes**	10 ft.	
9 (pg.31)	2	Single Acting	Single Wing	**Yes**	10 ft.	
10 (pg.32)	3 or 4	Double Acting	Single Wing	No	10 ft.	
11 (pg.33)	3 or 4	Single Acting	Single Wing	No	10 ft.	

Terms used in the chart are defined as follows:

- **Tractor Outlets**
  - The number of sets of hydraulic outlets located at the rear of the tractor.



- **Wing Flow (Double/Single Acting)**
  - This describes whether the wing lift cylinders are each routed with two lines for double acting flow or routed with one line and a vent plug on the cylinder for single acting flow.

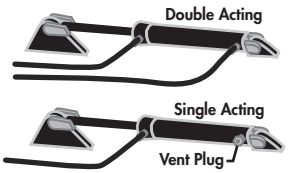

- **Wing Motion (Independent/Combined)**
  - This describes how the cutter's wings are configured to operate - either independently (each wing can be raised individually which requires two separate hydraulic circuits), or combined (the wings are teed together and work off one hydraulic circuit).

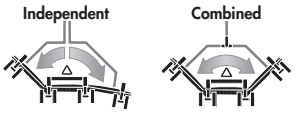

- **Selector Value**
  - The selector valve may be required depending on the number of tractor outlets available and the options in which the owner/operator have requested. The selector valve enables an additional hydraulic circuit to be used by splitting one circuit into two. This is accomplished at the control of a switch which toggles between the two circuits.

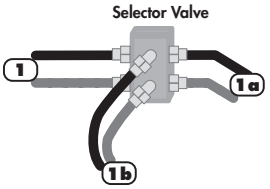

Hose Routing Option 1

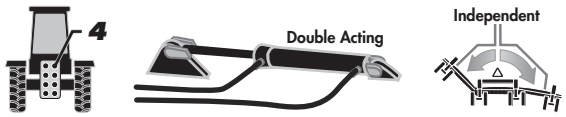

- **4 Sets of Tractor Hydraulic Outlets**
- **Double Acting Hydraulic Flow**
- **Independent Wings (not teed)**

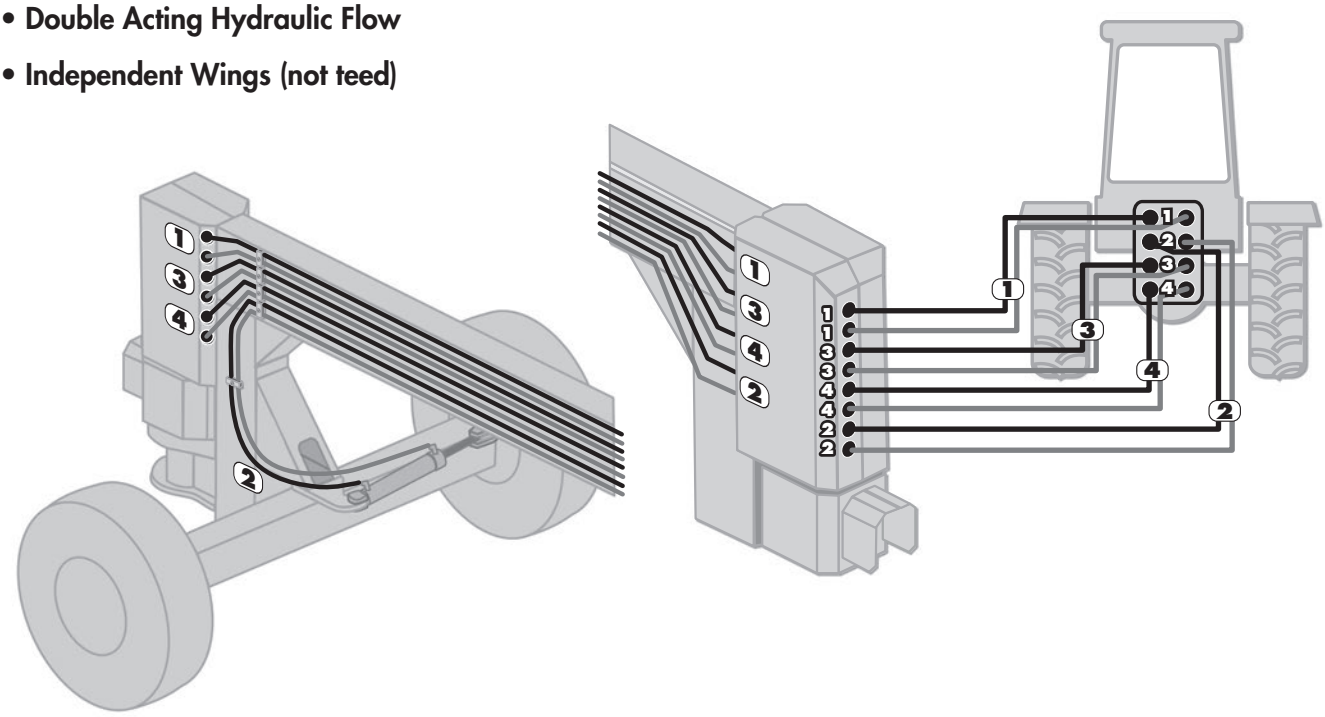

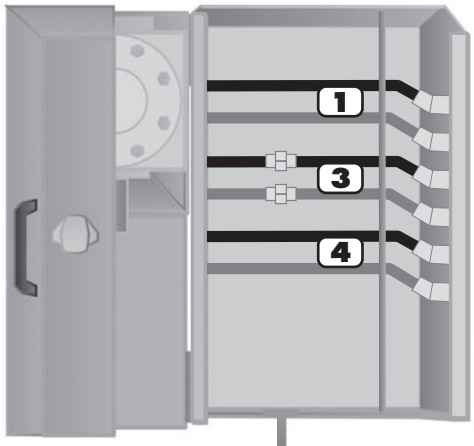

- (1) - Controls cutter lift cylinders.
- (2) - Controls steering cylinder.
- (3) - Controls independent wing lift (left wing).
- (4) - Controls independent wing lift (right wing).

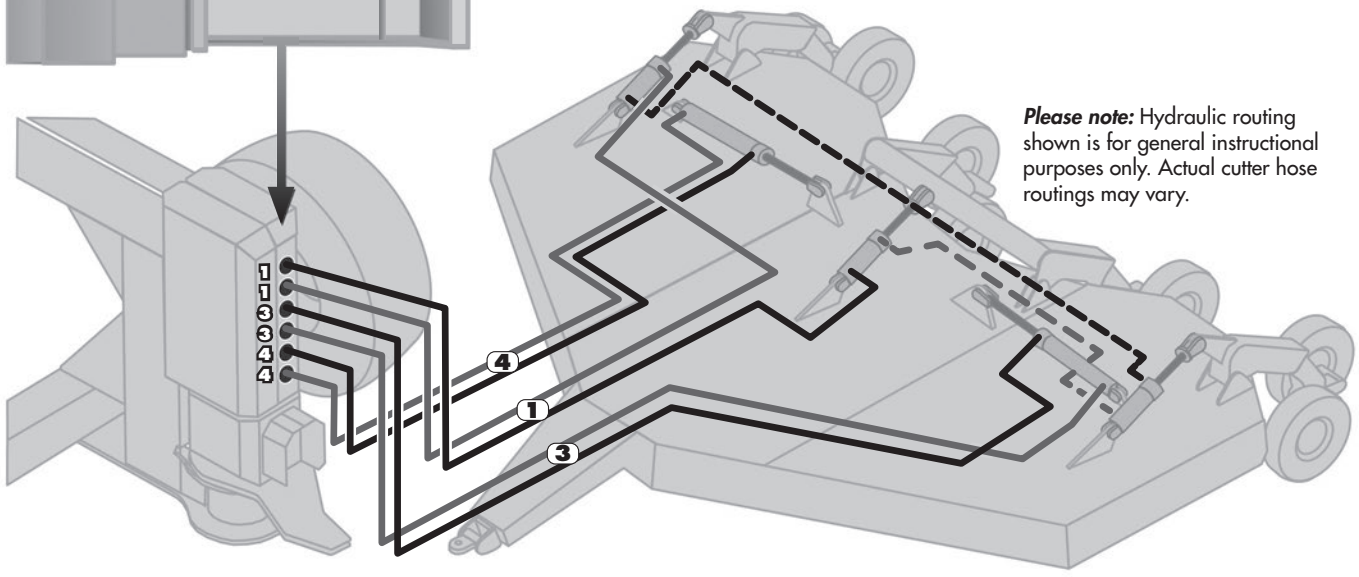

Please note: Hydraulic routing shown is for general instructional purposes only. Actual cutter hose routings may vary.

Hose Routing Option 2

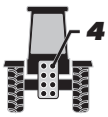

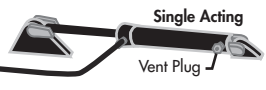

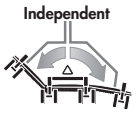

2

- 4 Sets of Tractor Hydraulic Outlets
- Single Acting Hydraulic Flow
- Independent Wings (not teed)

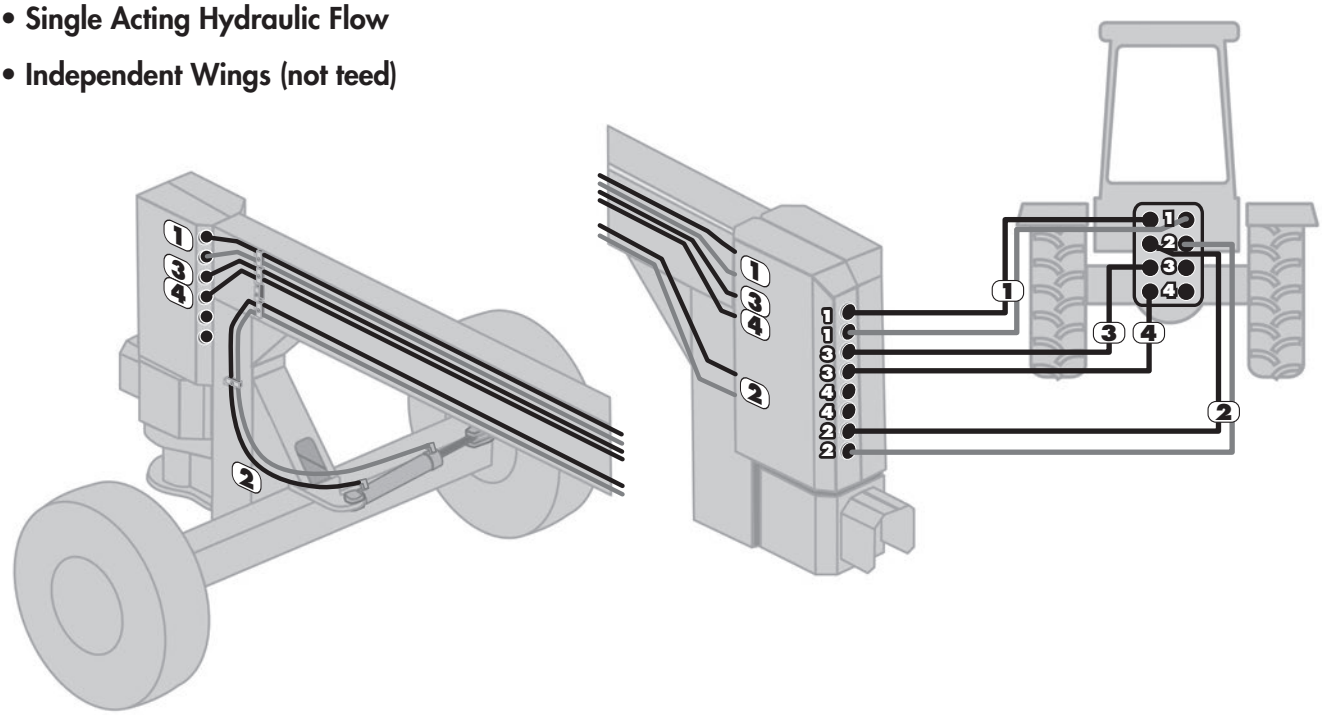

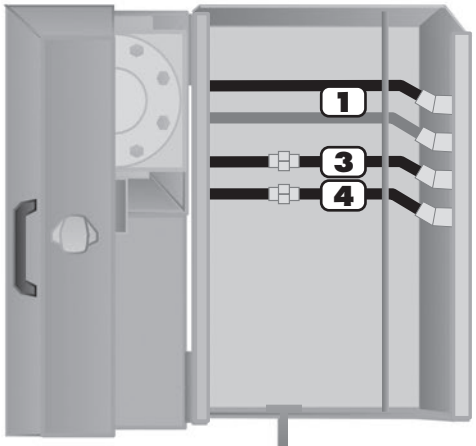

1 - Controls cutter lift cylinders.
2 - Controls steering cylinder.
3 - Controls independent wing lift (left wing).
4 - Controls independent wing lift (right wing).

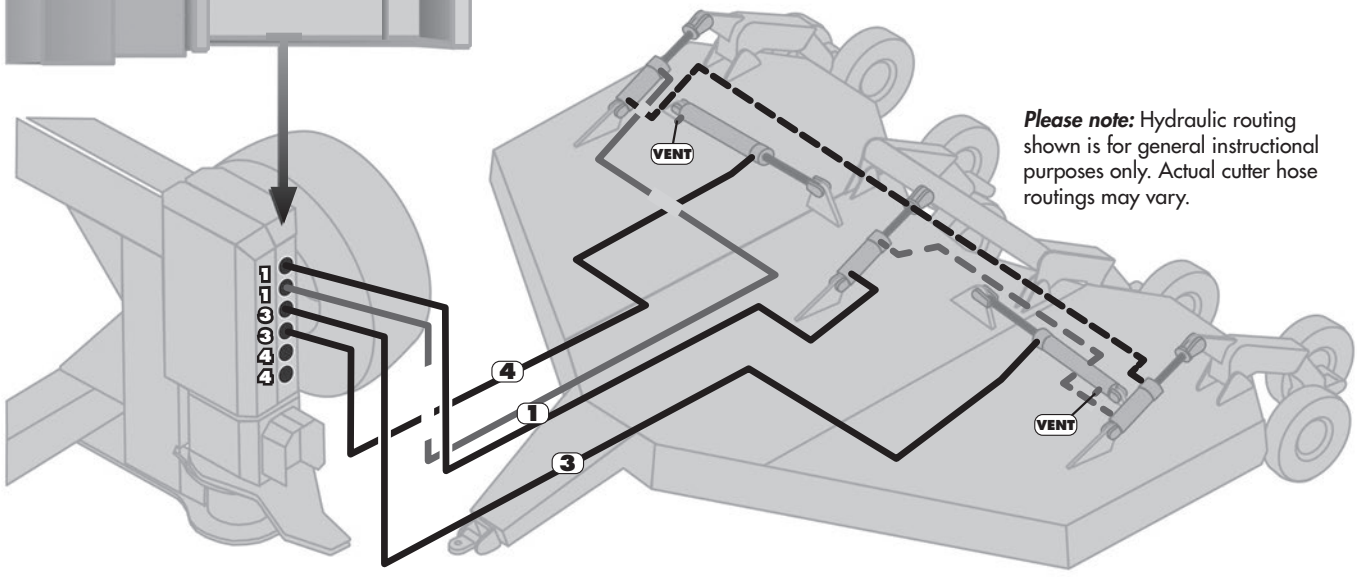

Please note: Hydraulic routing shown is for general instructional purposes only. Actual cutter hose routings may vary.

Hose Routing Option 3

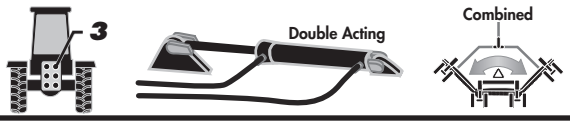

- 3 Sets of Tractor Hydraulic Outlets
- Double Acting Hydraulic Flow
- Combined Wings (teed)

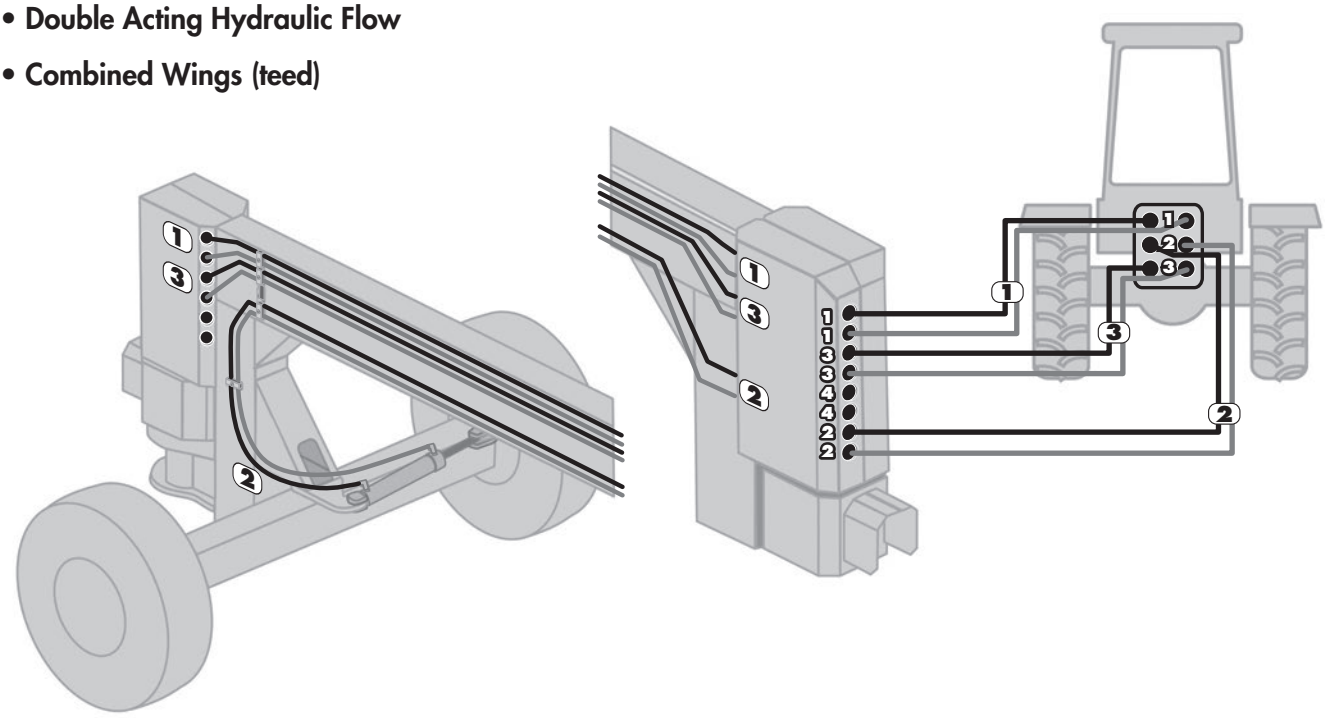

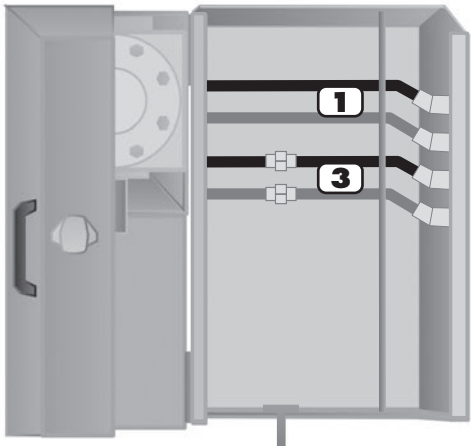

1 - Controls cutter lift cylinders.
2 - Controls steering cylinder.
3 - Controls combined wing lift.

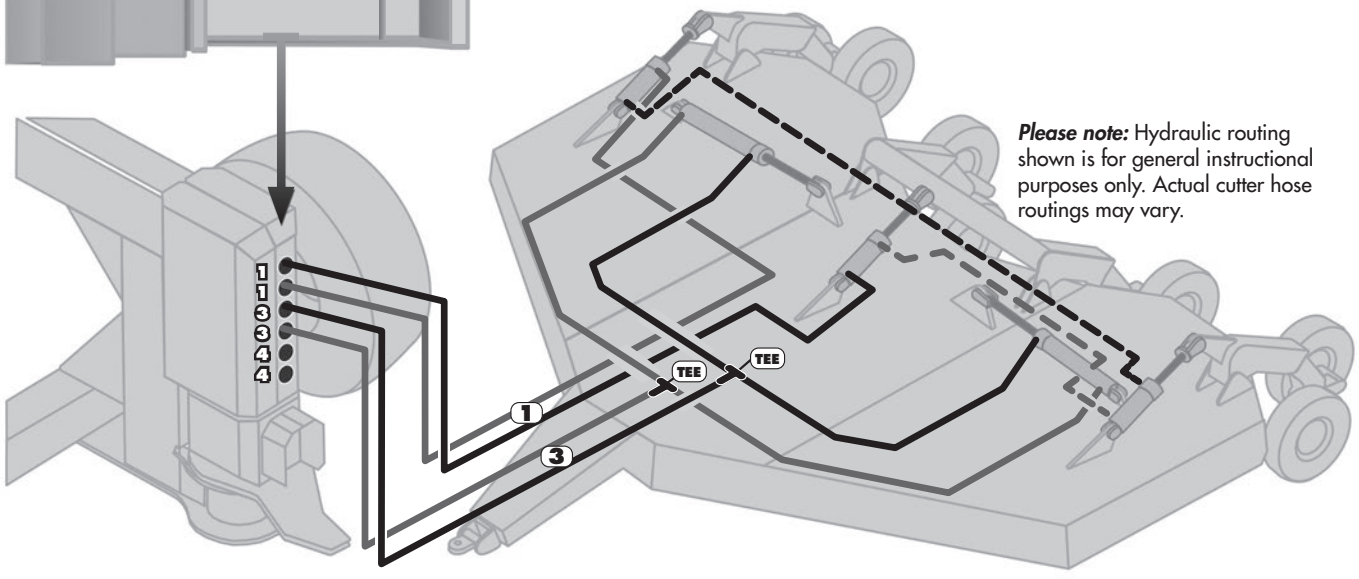

Please note: Hydraulic routing shown is for general instructional purposes only. Actual cutter hose routings may vary.

Hose Routing Option 4

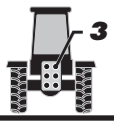



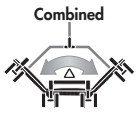

4

- **3 Sets of Tractor Hydraulic Outlets**
- **Single Acting Hydraulic Flow**
- **Combined Wings (teed)**

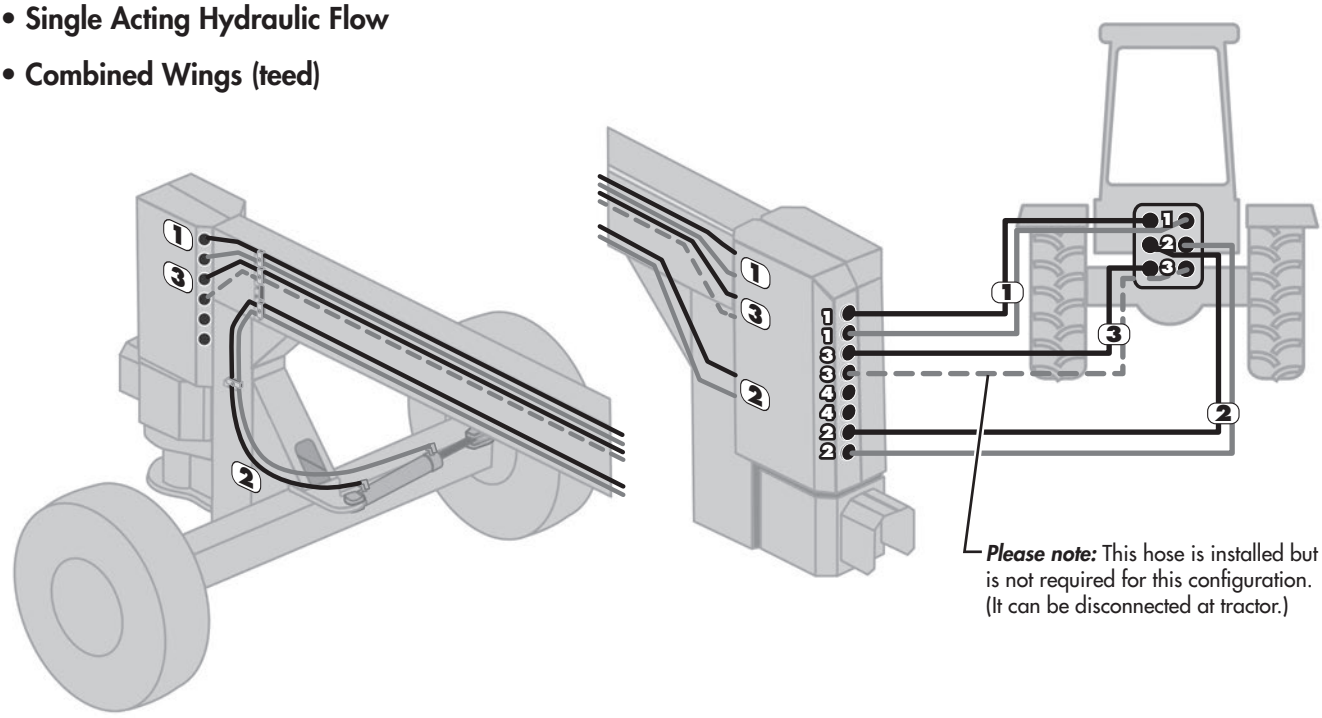

Please note: This hose is installed but is not required for this configuration. (It can be disconnected at tractor.)

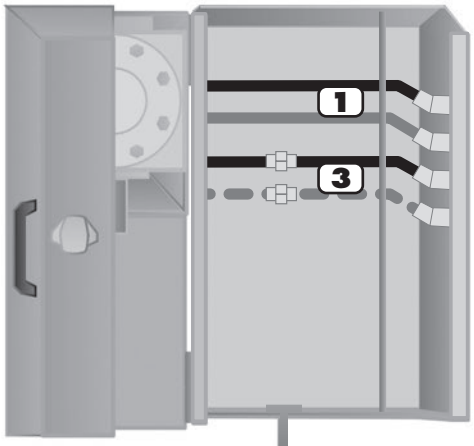

1 - Controls cutter lift cylinders.
2 - Controls steering cylinder.
3 - Controls combined wing lift.

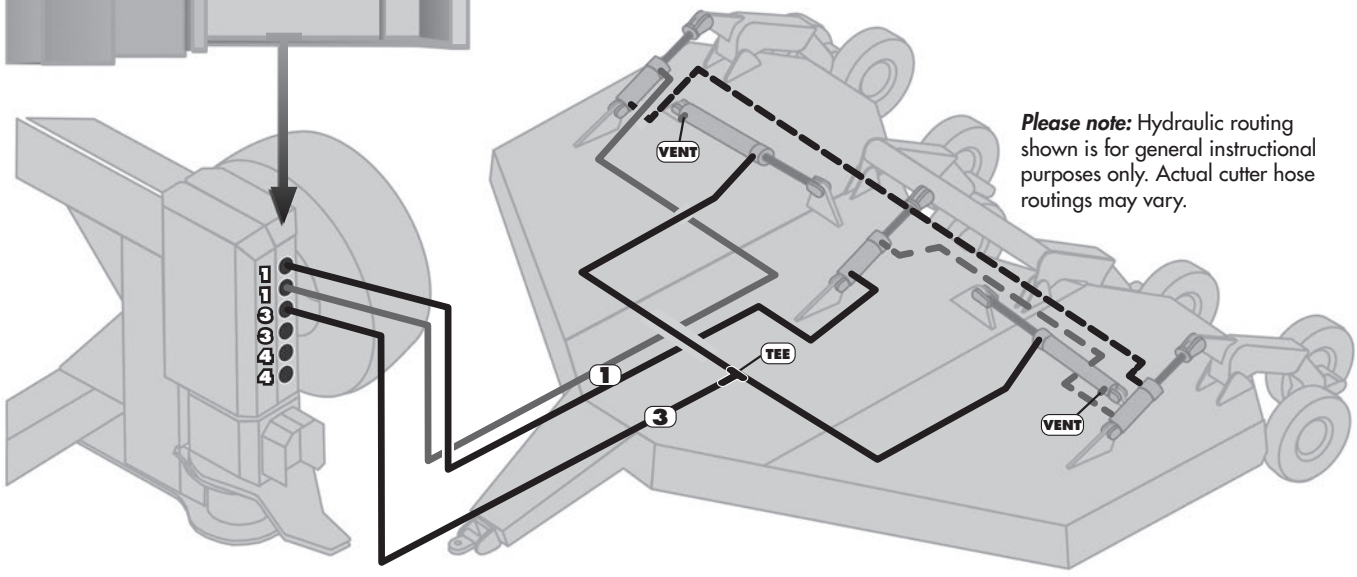

Please note: Hydraulic routing shown is for general instructional purposes only. Actual cutter hose routings may vary.

Hose Routing Option 5

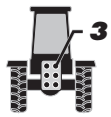

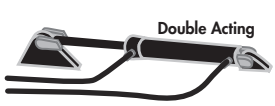

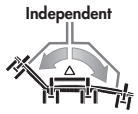



5

- 3 Sets of Tractor Hydraulic Outlets
- Double Acting Hydraulic Flow
- Independent Wings (not teed)
- Selector Valve Required

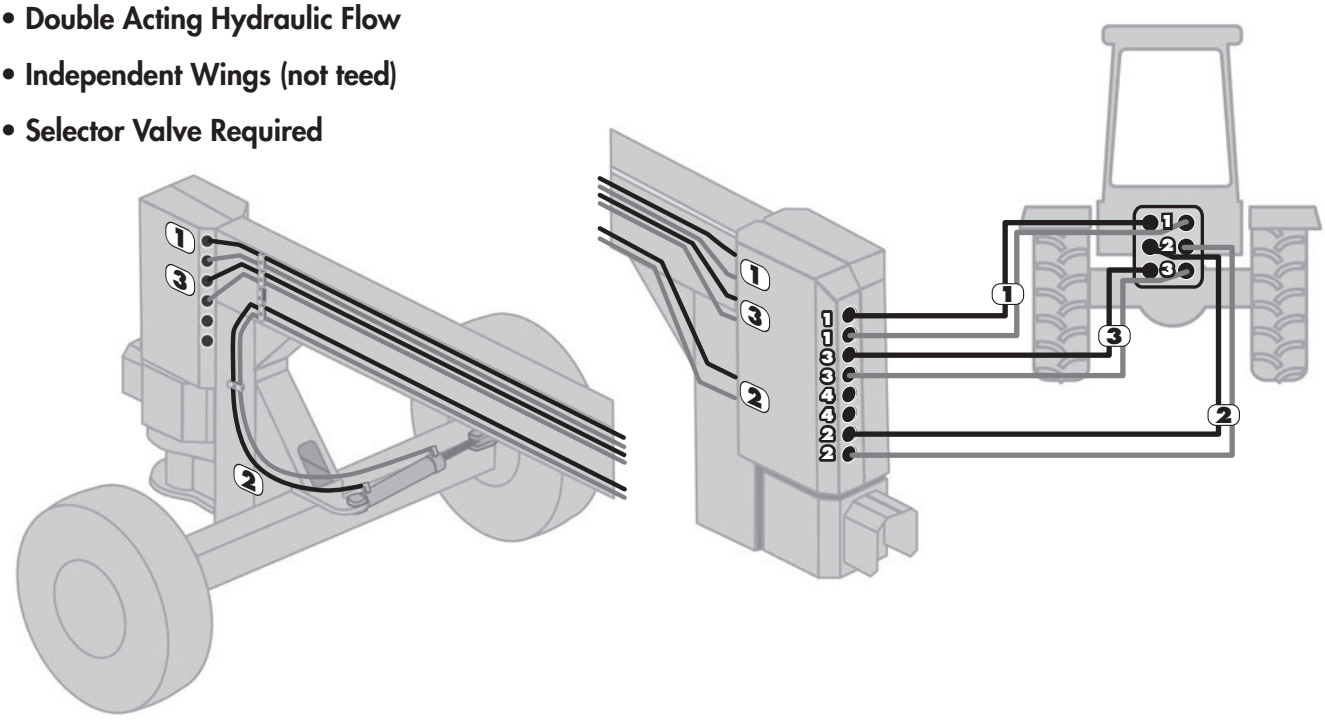

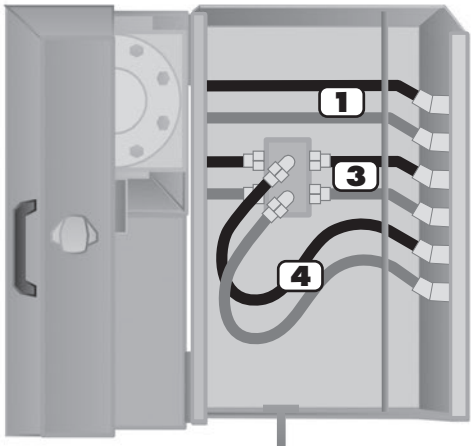

1 - Controls cutter lift cylinders.

2 - Controls steering cylinder.

3 - Controls independent wing lift (left wing).

4 - Controls independent wing lift (right wing).

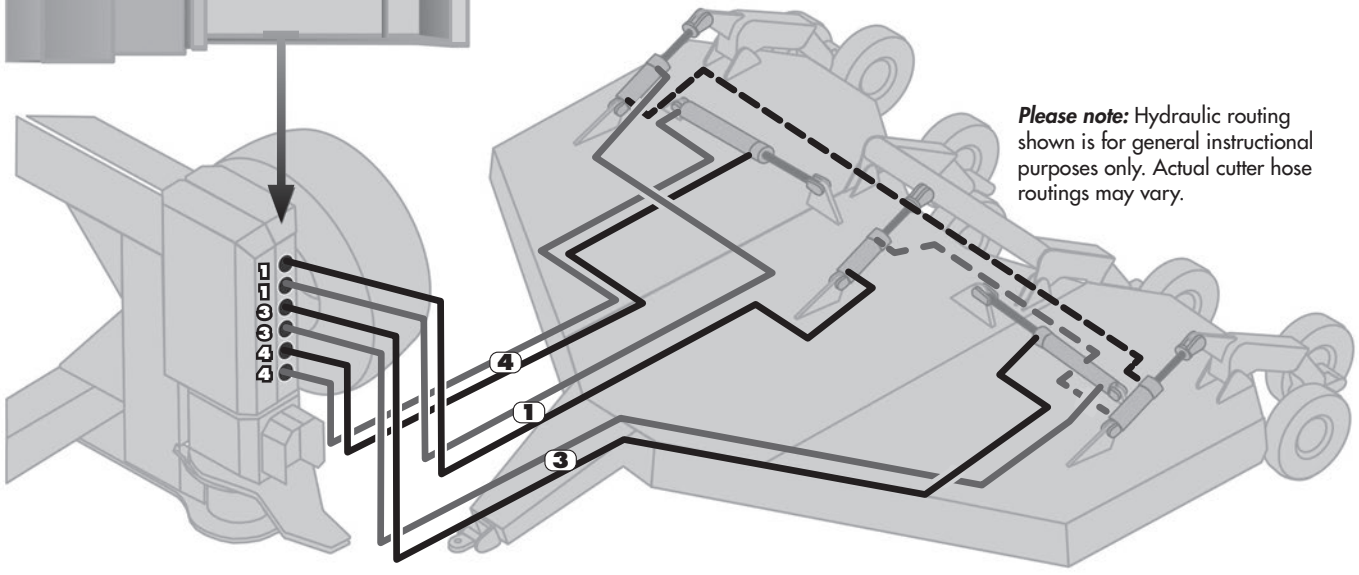

Please note: Hydraulic routing shown is for general instructional purposes only. Actual cutter hose routings may vary.

Hose Routing Option 6



- 3 Sets of Tractor Hydraulic Outlets
- Single Acting Hydraulic Flow
- Independent Wings (not teed)
- Selector Valve Required

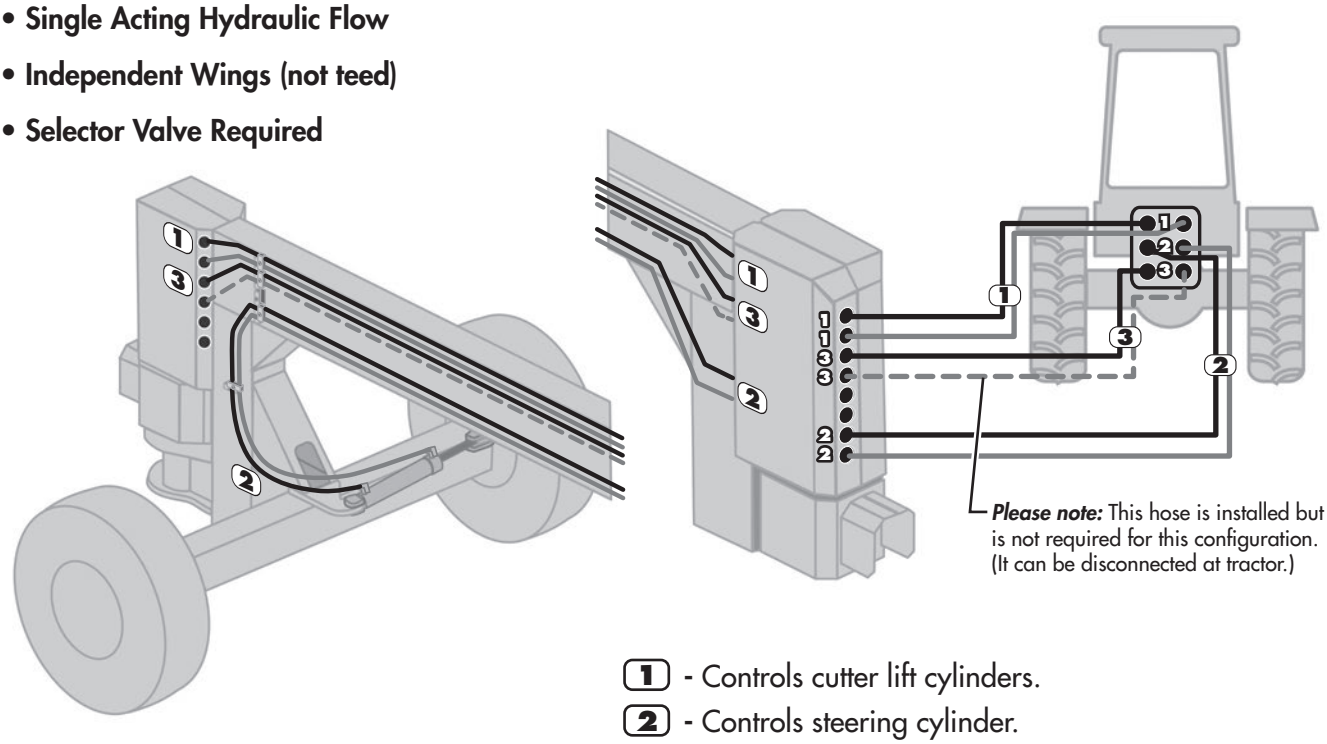

Please note: This hose is installed but is not required for this configuration. (It can be disconnected at tractor.)

1 - Controls cutter lift cylinders.

2 - Controls steering cylinder.

3 - 3 - Controls independent wing lift (left wing).

3 - 4 - Controls independent wing lift (right wing).

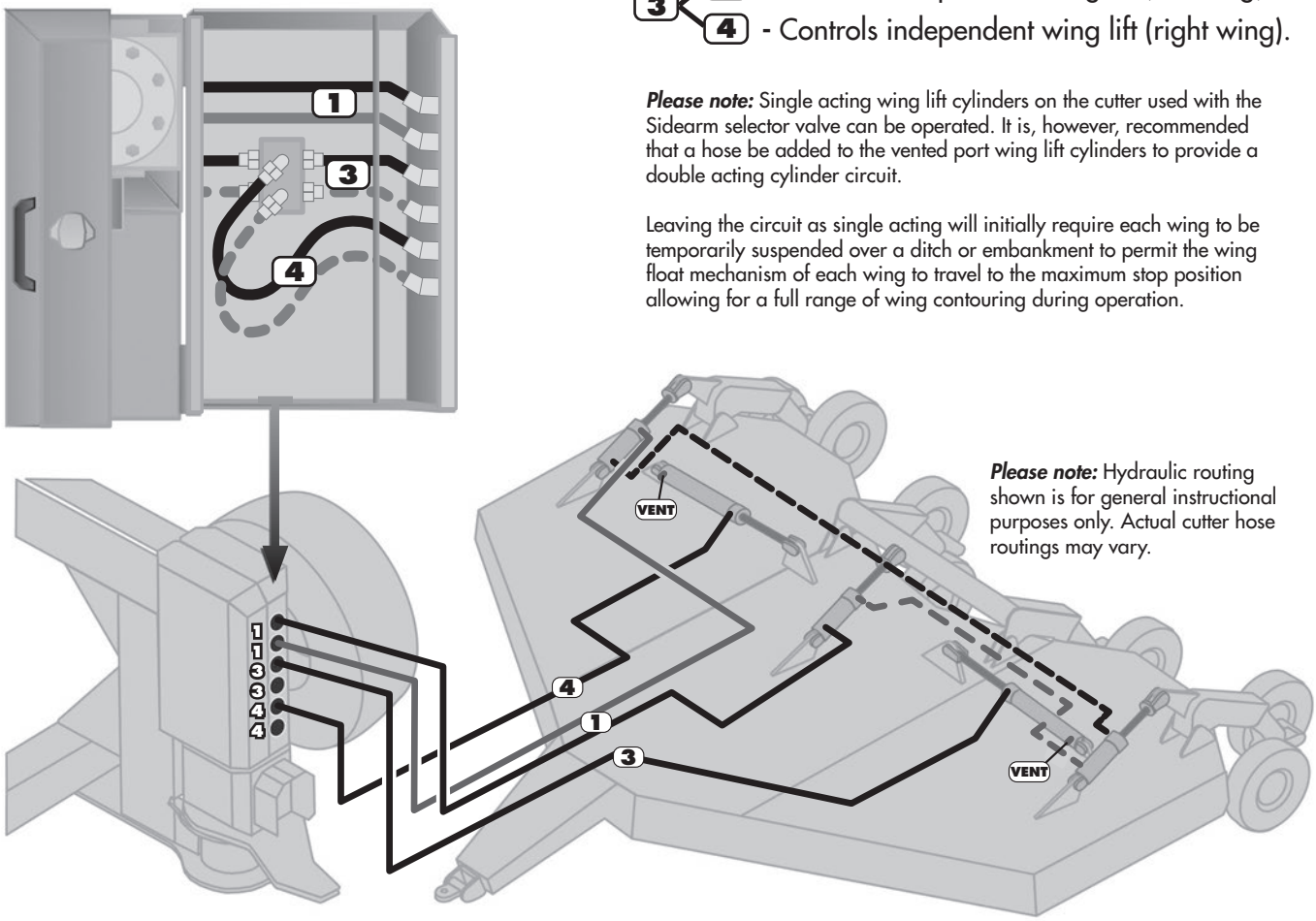

Please note: Single acting wing lift cylinders on the cutter used with the Sidearm selector valve can be operated. It is, however, recommended that a hose be added to the vented port wing lift cylinders to provide a double acting cylinder circuit.

Leaving the circuit as single acting will initially require each wing to be temporarily suspended over a ditch or embankment to permit the wing float mechanism of each wing to travel to the maximum stop position allowing for a full range of wing contouring during operation.

Please note: Hydraulic routing shown is for general instructional purposes only. Actual cutter hose routings may vary.

Hose Routing Option 7

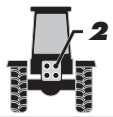

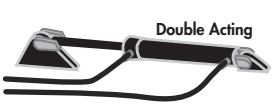

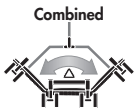



7

- **2 Sets of Tractor Hydraulic Outlets**
- **Double Acting Hydraulic Flow**
- **Combined Wings (teed)**
- **Selector Valve Required**

Please note: These hoses are installed but are not required for this configuration. (They can be disconnected at the tractor.)

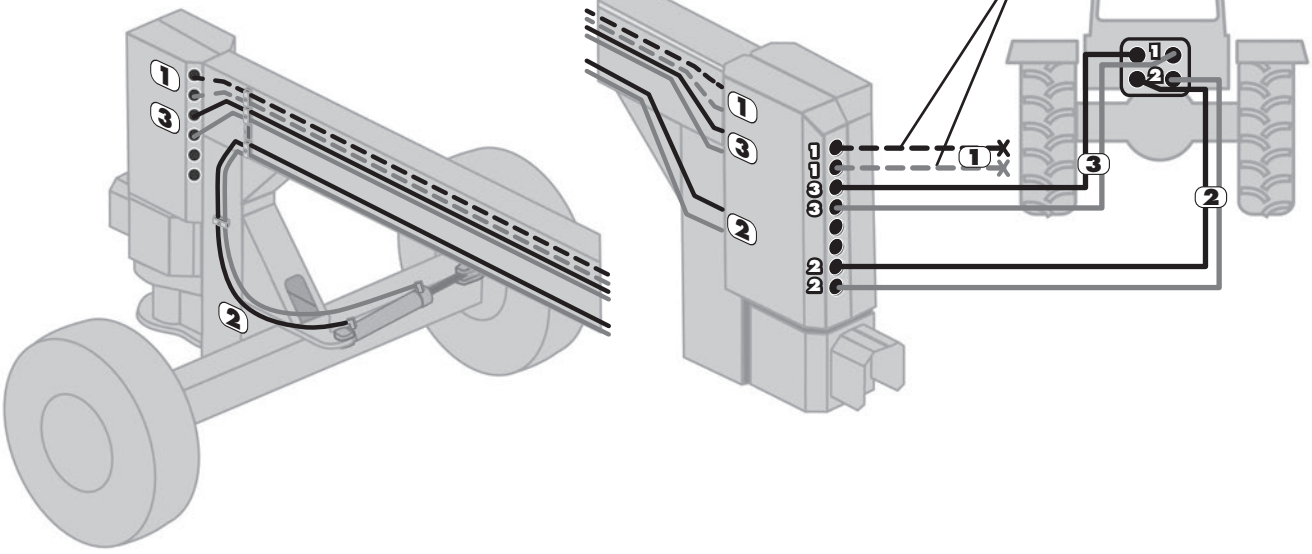

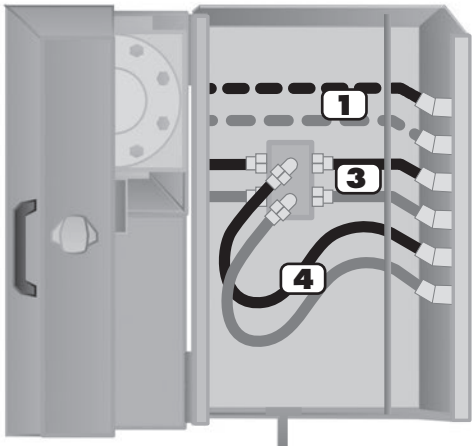

(1) - Installed but not required.

(3) (3) - Controls cutter lift cylinders.

(3) (4) - Controls combined wing lift.

(2) - Controls steering cylinder.

Please note: Hydraulic routing shown is for general instructional purposes only. Actual cutter hose routings may vary.

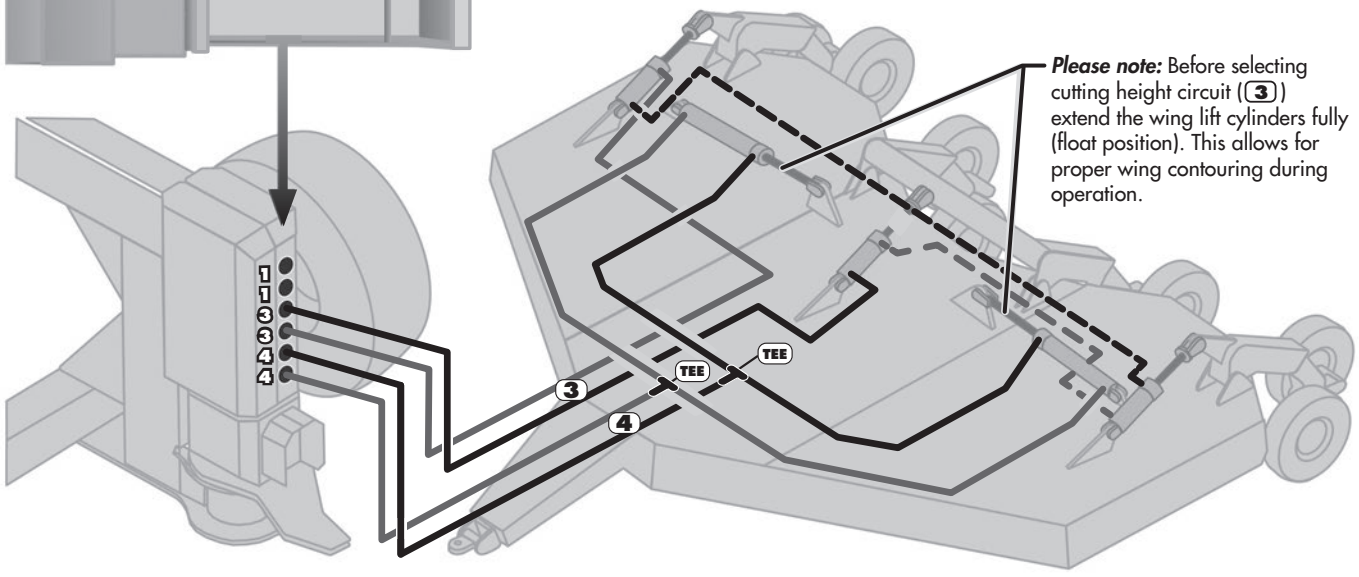

Please note: Before selecting cutting height circuit ((3)) extend the wing lift cylinders fully (float position). This allows for proper wing contouring during operation.

Hose Routing Option 8

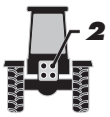

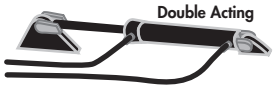



- **2 Sets of Tractor Hydraulic Outlets**
- **Double Acting Hydraulic Flow**
- **Selector Valve Required**

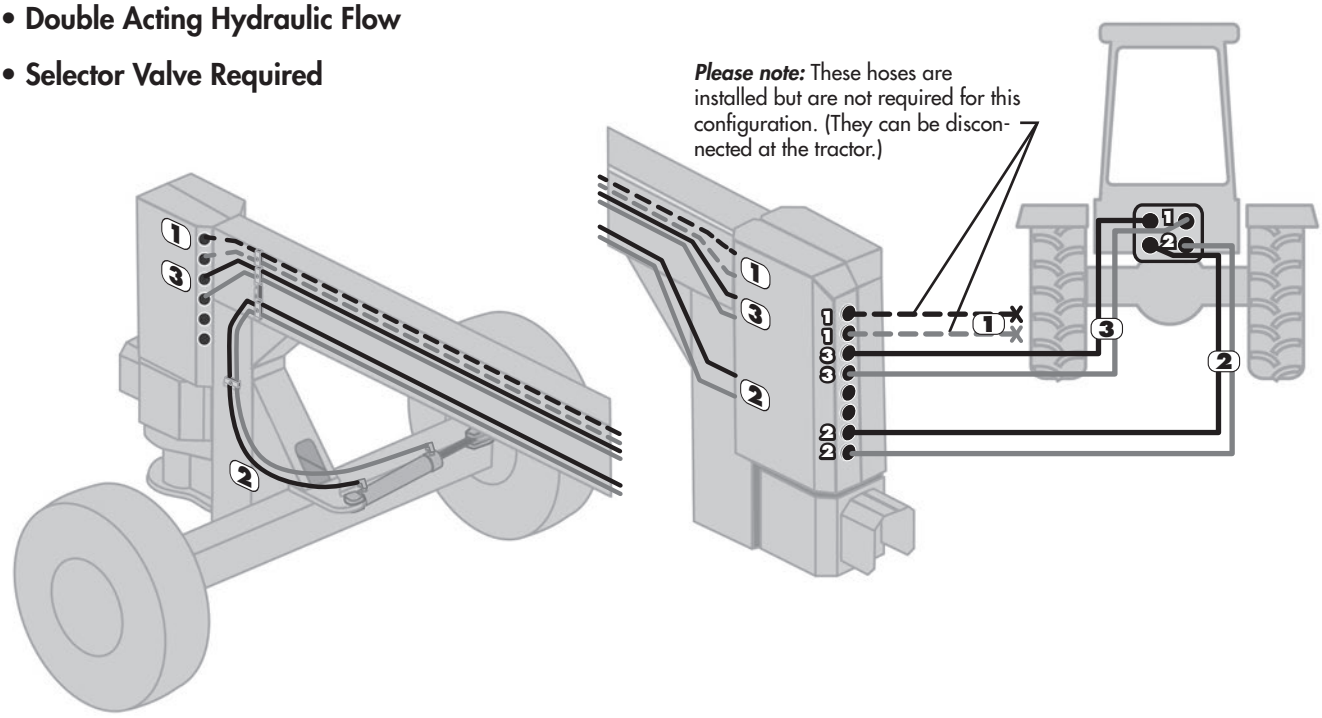

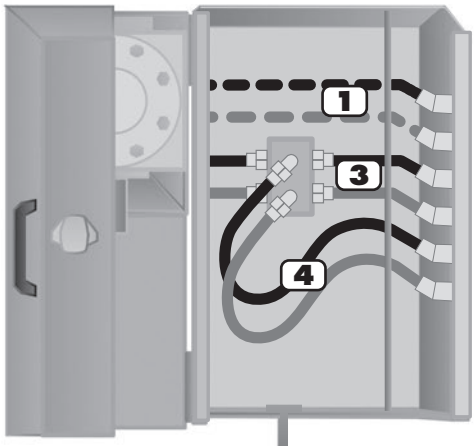

(1) - Installed but not required.

(3) (3) - Controls cutter lift cylinders.
(4) - Controls wing lift cylinder.

(2) - Controls steering cylinder.

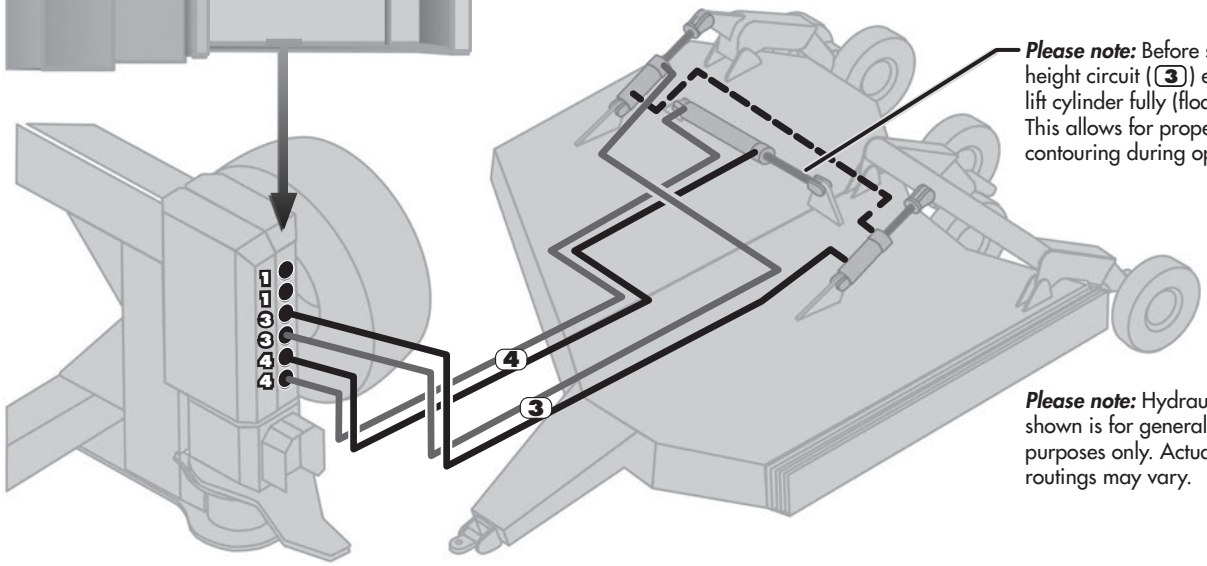

Please note: Before selecting cutting height circuit ((3)) extend the wing lift cylinder fully (float position). This allows for proper wing contouring during operation.

Please note: Hydraulic routing shown is for general instructional purposes only. Actual cutter hose routings may vary.

Hose Routing Option 9

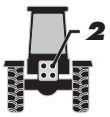

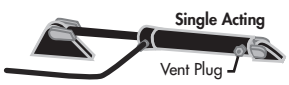



- **2 Sets of Tractor Hydraulic Outlets**
- **Single Acting Hydraulic Flow**
- **Selector Valve Required**

Please note: These hoses are installed but are not required for this configuration. (They can be disconnected at the tractor.)

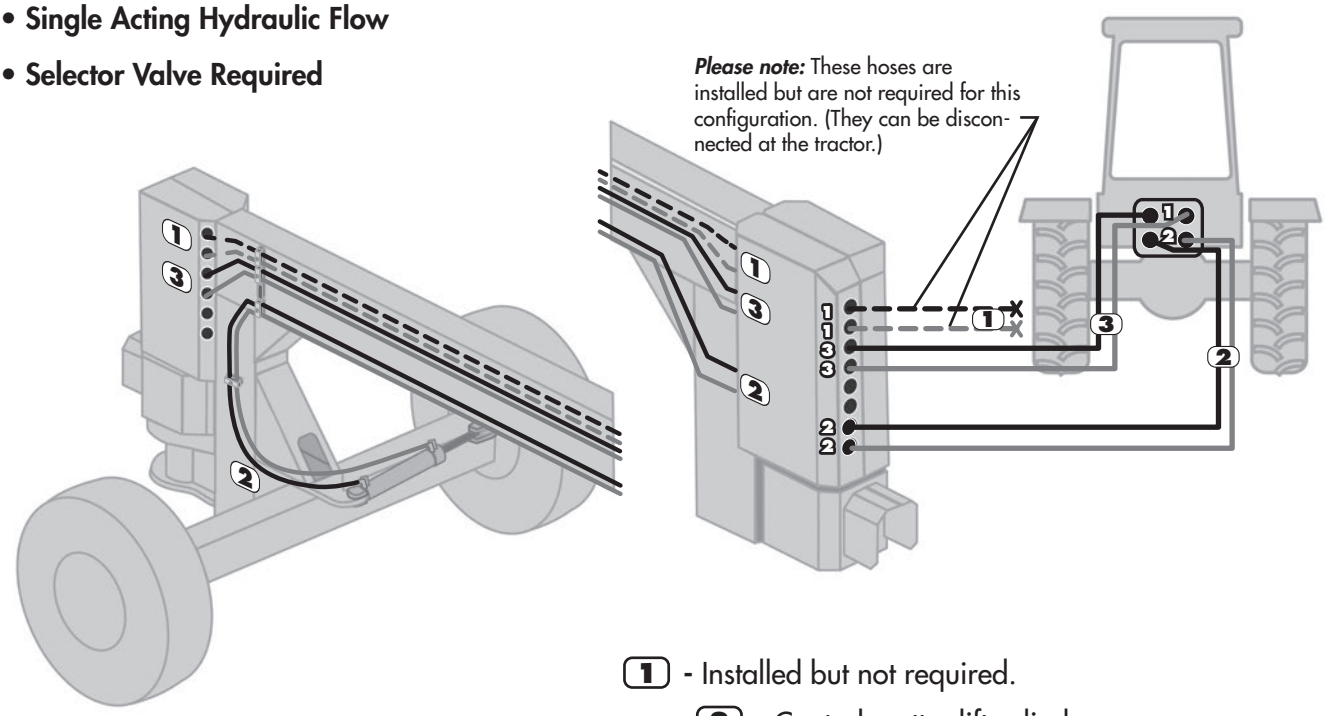

(1) - Installed but not required.

(3) (3) - Controls cutter lift cylinders.

(3) (4) - Controls wing lift cylinder.

(2) - Controls steering cylinder.

Please note: Single acting wing lift cylinders on the cutter used with the Sidearm selector valve can be operated. It is, however, recommended that a hose be added to the vented port wing lift cylinder to provide a double acting cylinder circuit.

Leaving the circuit as single acting will initially require each wing to be temporarily suspended over a ditch or embankment to permit the wing float mechanism of each wing to travel to the maximum stop position allowing for a full range of wing contouring during operation.

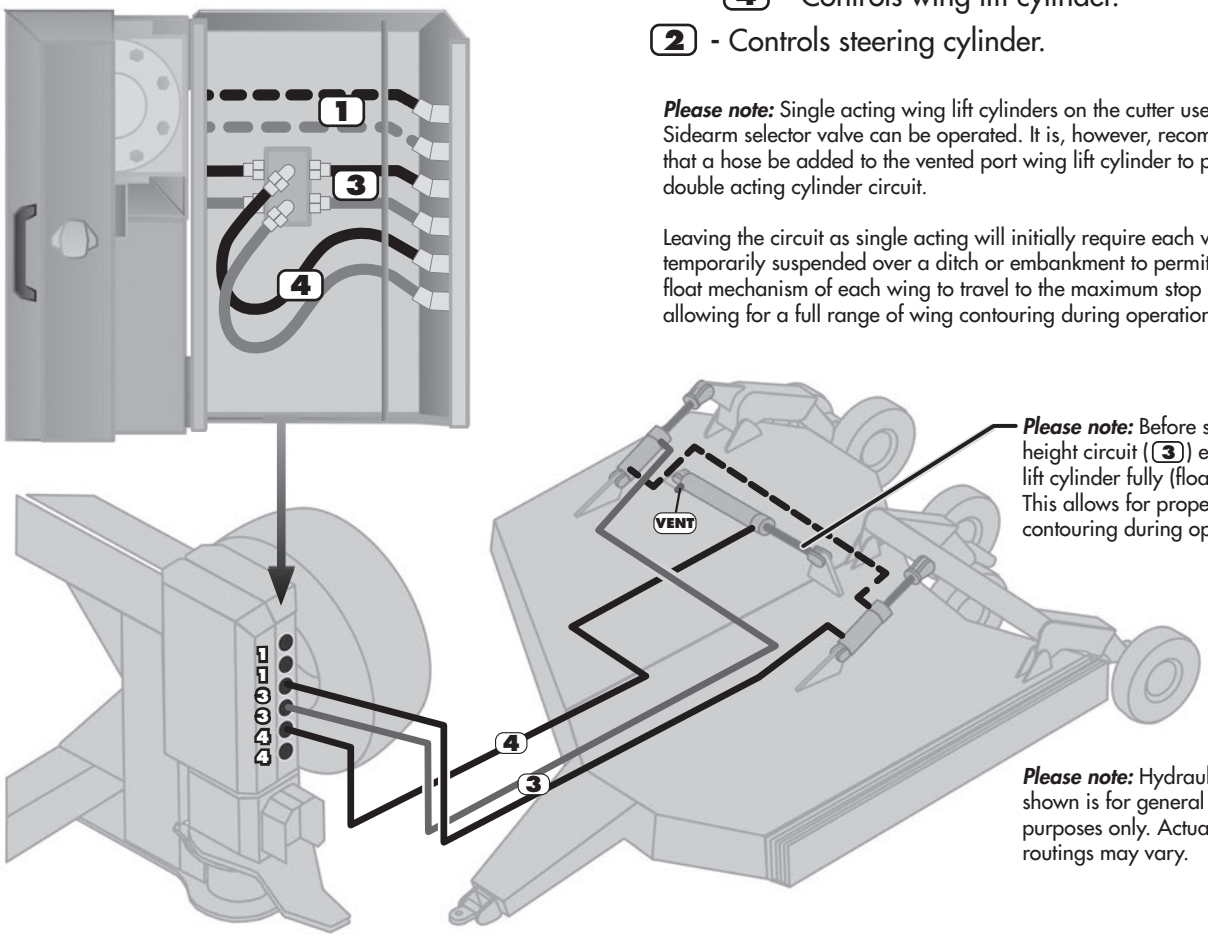

Please note: Before selecting cutting height circuit ((3)) extend the wing lift cylinder fully (float position). This allows for proper wing contouring during operation.

Please note: Hydraulic routing shown is for general instructional purposes only. Actual cutter hose routings may vary.

Hose Routing Option 10

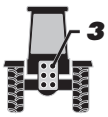

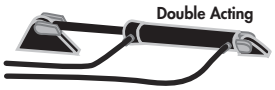

- 3 Sets of Tractor Hydraulic Outlets
- Double Acting Hydraulic Flow

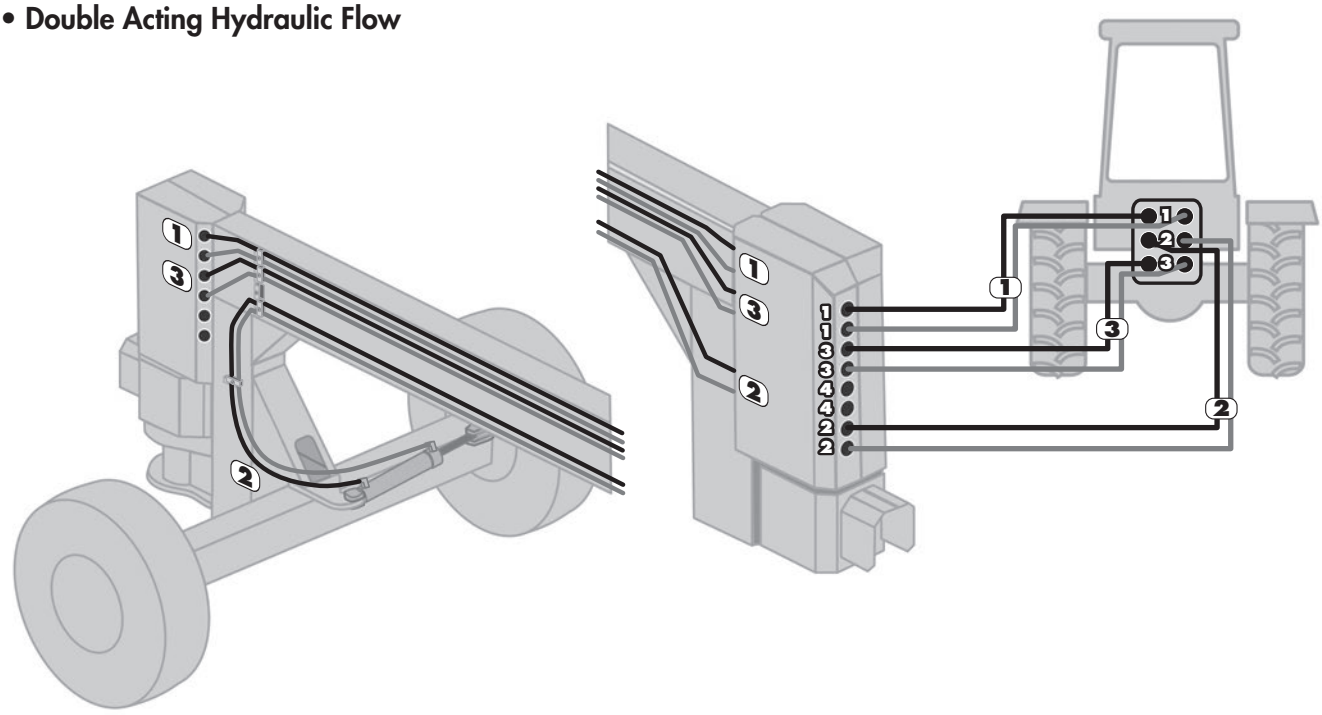

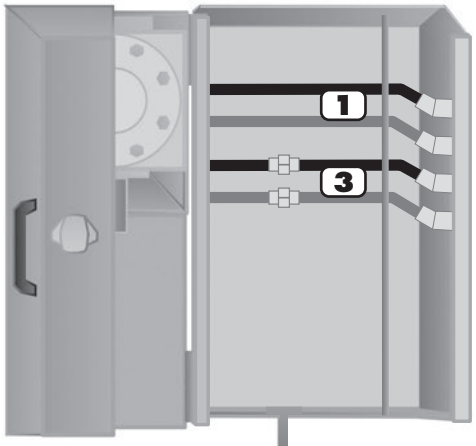

(1) - Controls cutter lift cylinders.
(2) - Controls steering cylinder.
(3) - Controls wing lift cylinder.

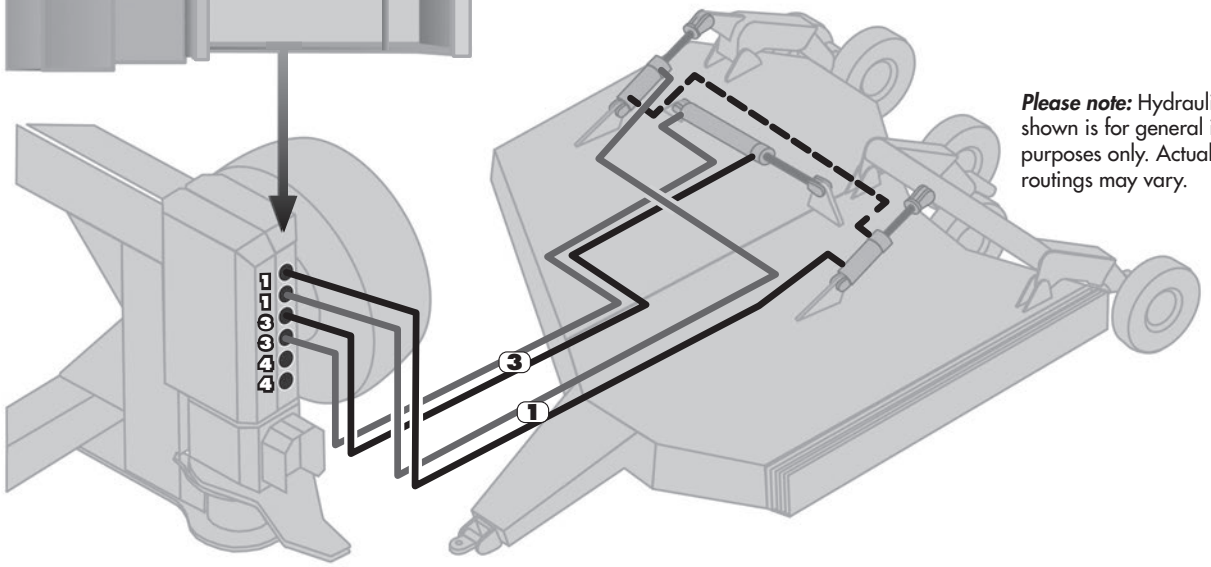

Please note: Hydraulic routing shown is for general instructional purposes only. Actual cutter hose routings may vary.

Hose Routing Option 11



11

- 3 Sets of Tractor Hydraulic Outlets
- Single Acting Hydraulic Flow

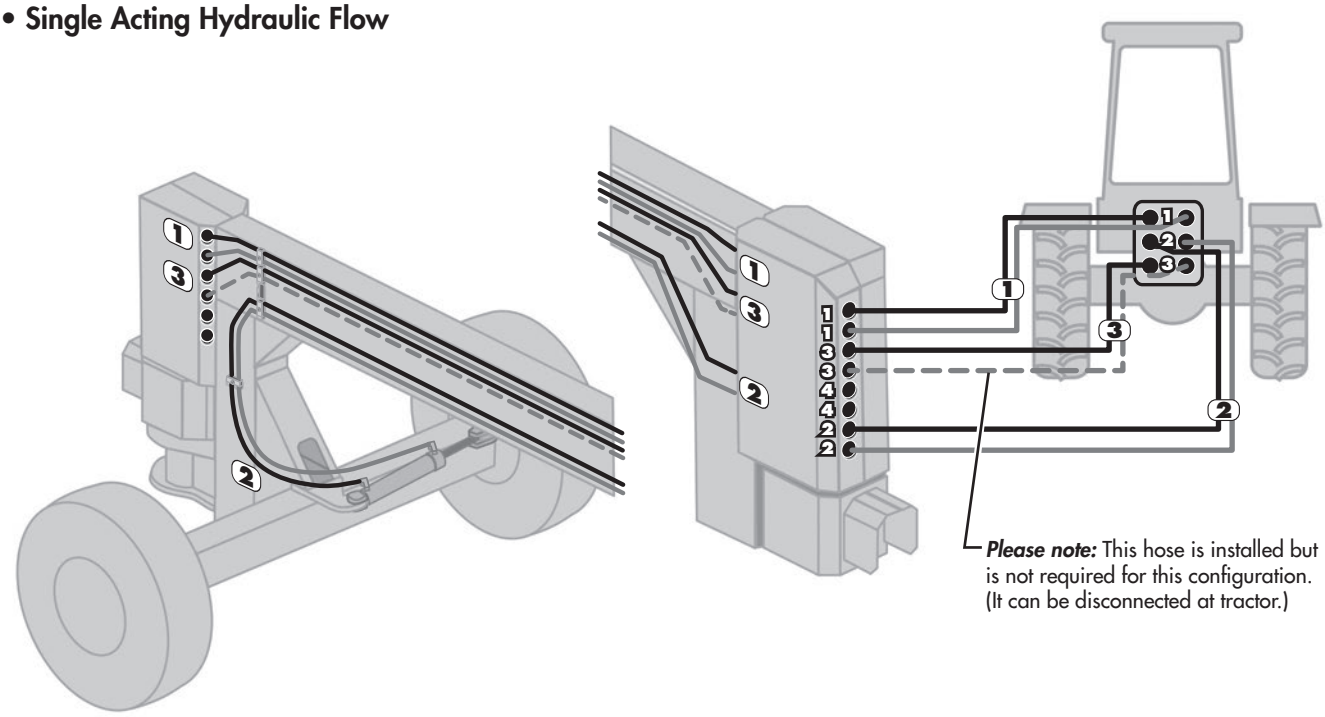

Please note: This hose is installed but is not required for this configuration. (It can be disconnected at tractor.)

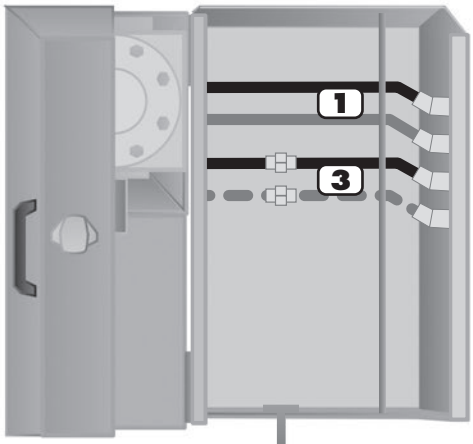

(1) - Controls cutter lift cylinders.
(2) - Controls steering cylinder.
(3) - Controls wing lift cylinder.

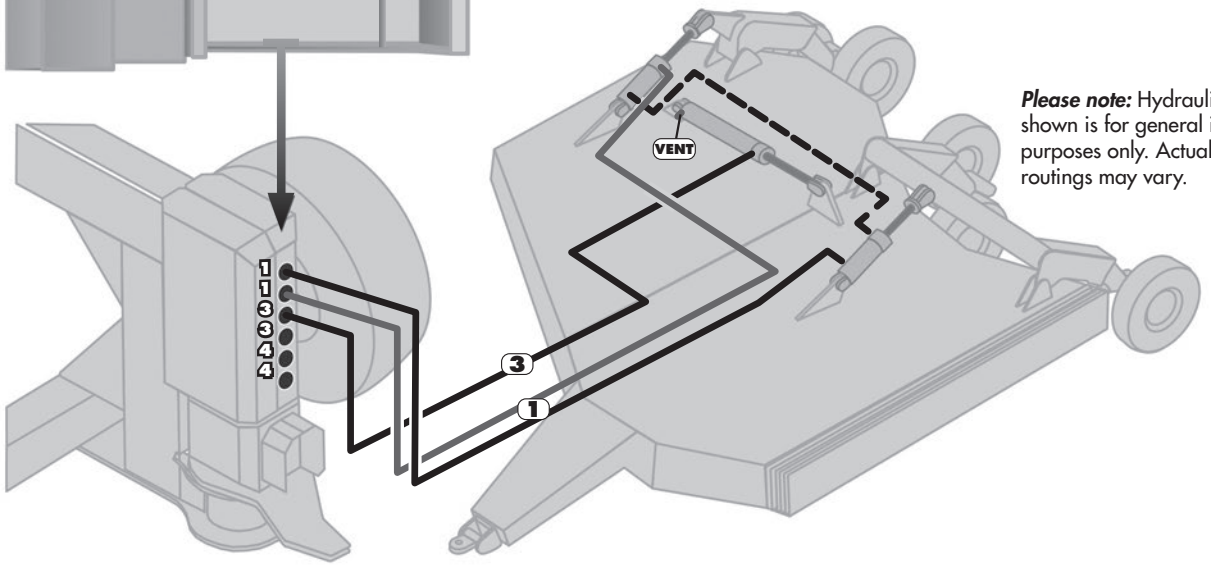

Please note: Hydraulic routing shown is for general instructional purposes only. Actual cutter hose routings may vary.

Electrical Components

Wiring Layout Overview

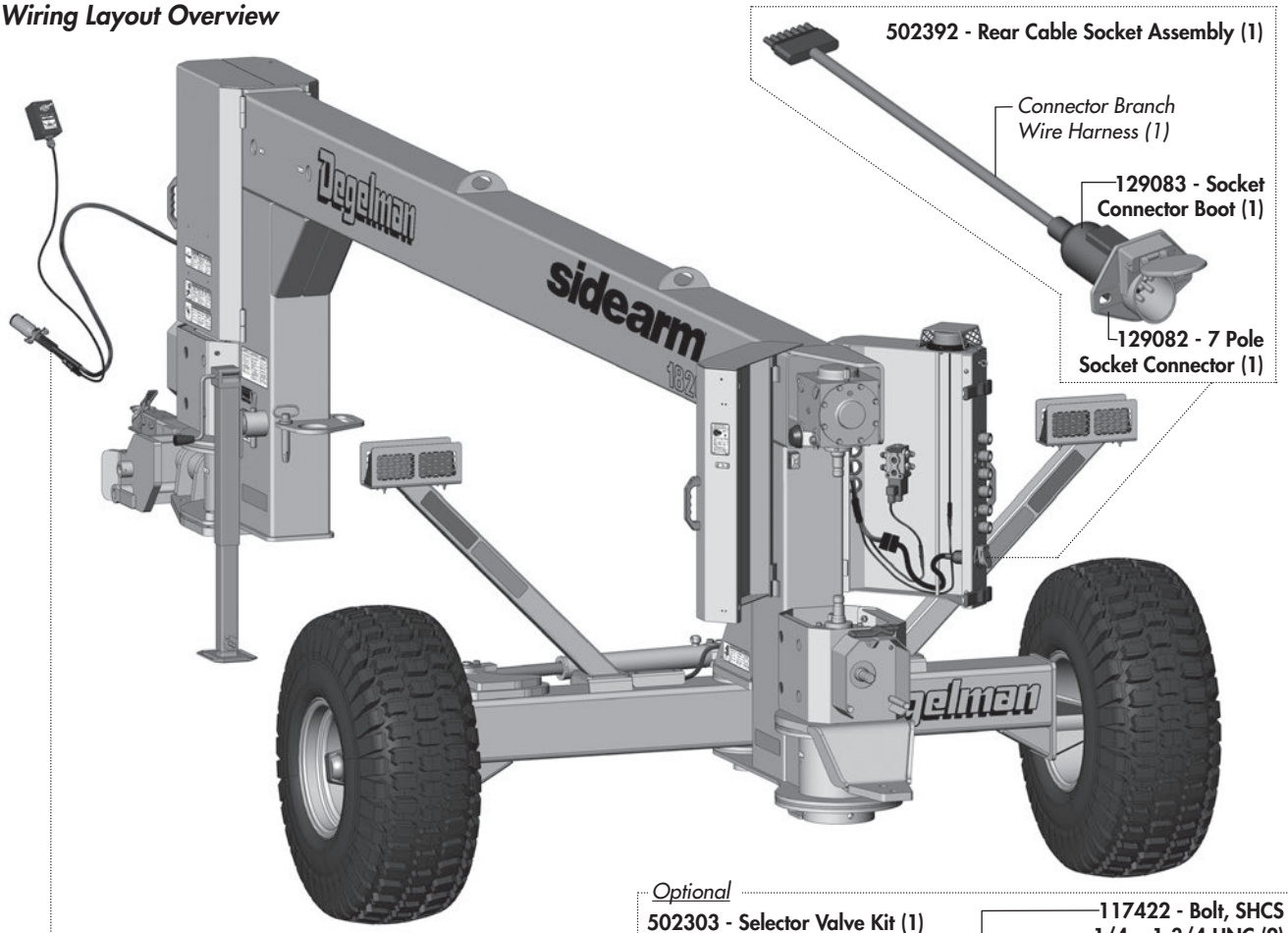

Optional

502303 - Selector Valve Kit (1)

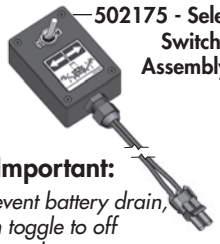

⚠ Important:

To prevent battery drain, switch toggle to off position when not in use.

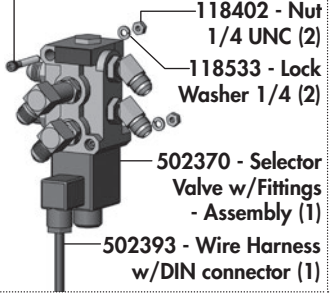

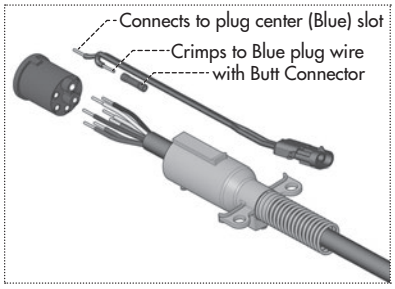

⚠ IMPORTANT: Pictures may show some wiring loose for routing purposes only. Ensure all wiring is zip tied and properly secure before using.

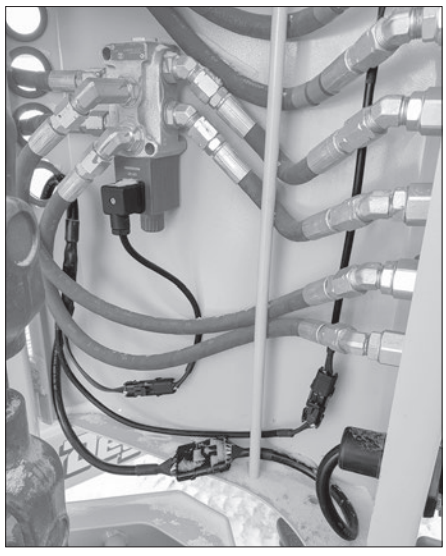

Electrical Components

502304 - Clearance Light Kit (1)

Kit also includes - **502390 - Wire Harness Assembly, SA 1820 (1)**

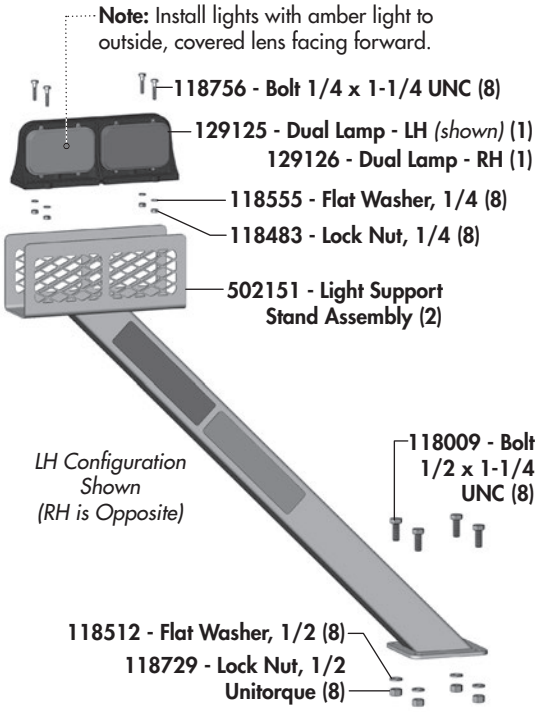





⚠ **IMPORTANT:** *Pictures may show some wiring loose for routing purposes only. Ensure all wiring is zip tied and properly secure before using.*

502305 - Strobe Light Kit (1)

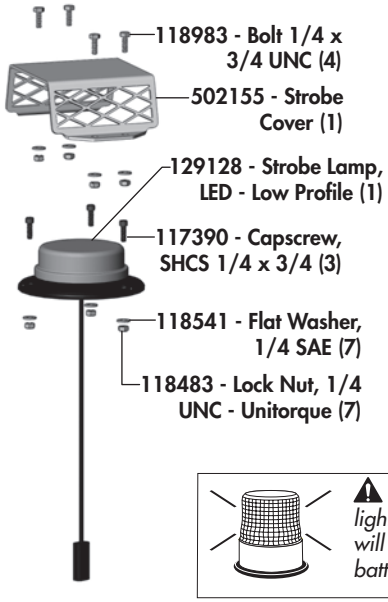



⚠ **IMPORTANT:** *Do not test strobe light using a battery charger. This will destroy microprocessor. Use battery current source only.*

Front Hitch Components

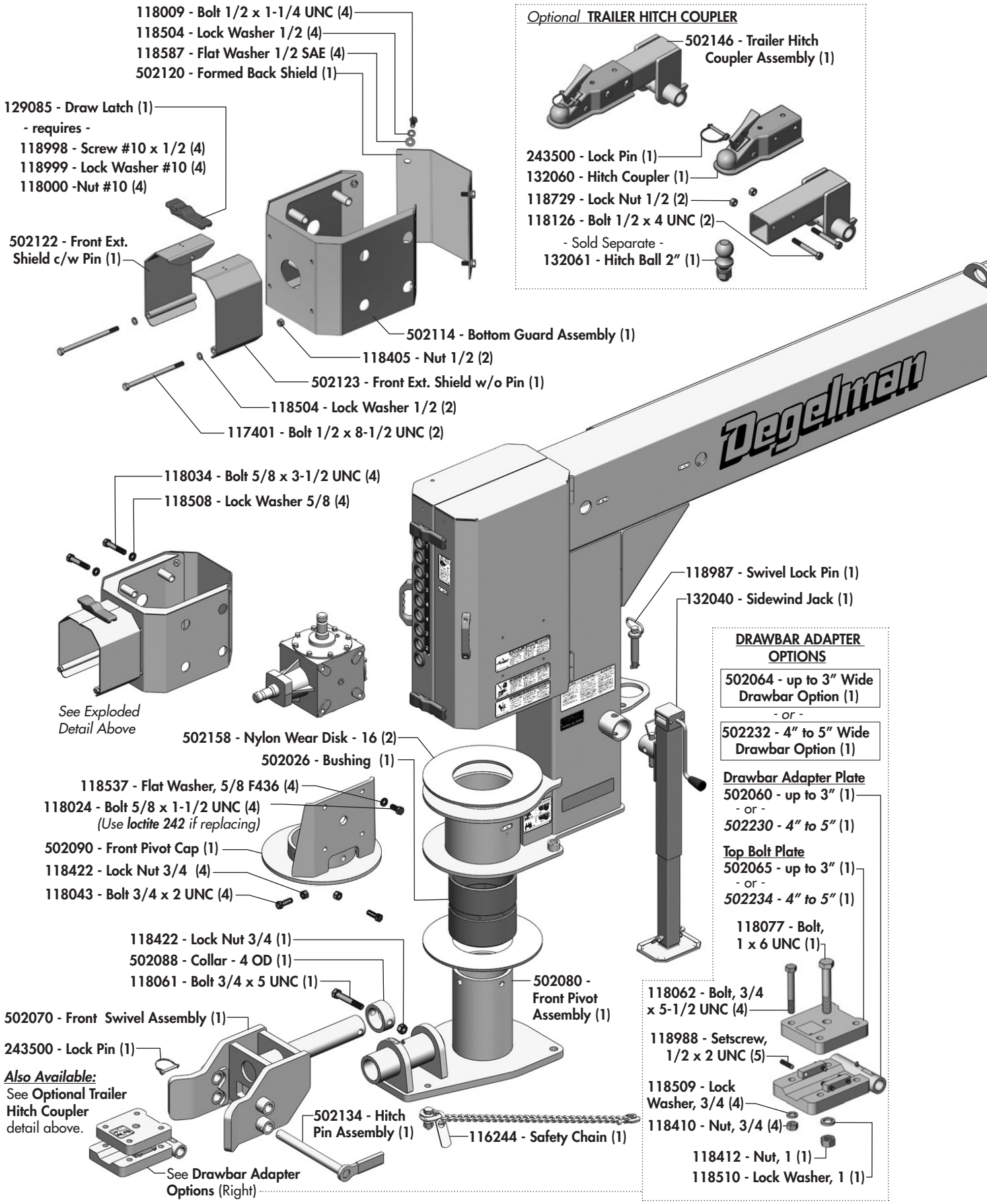

Steering Assembly Components

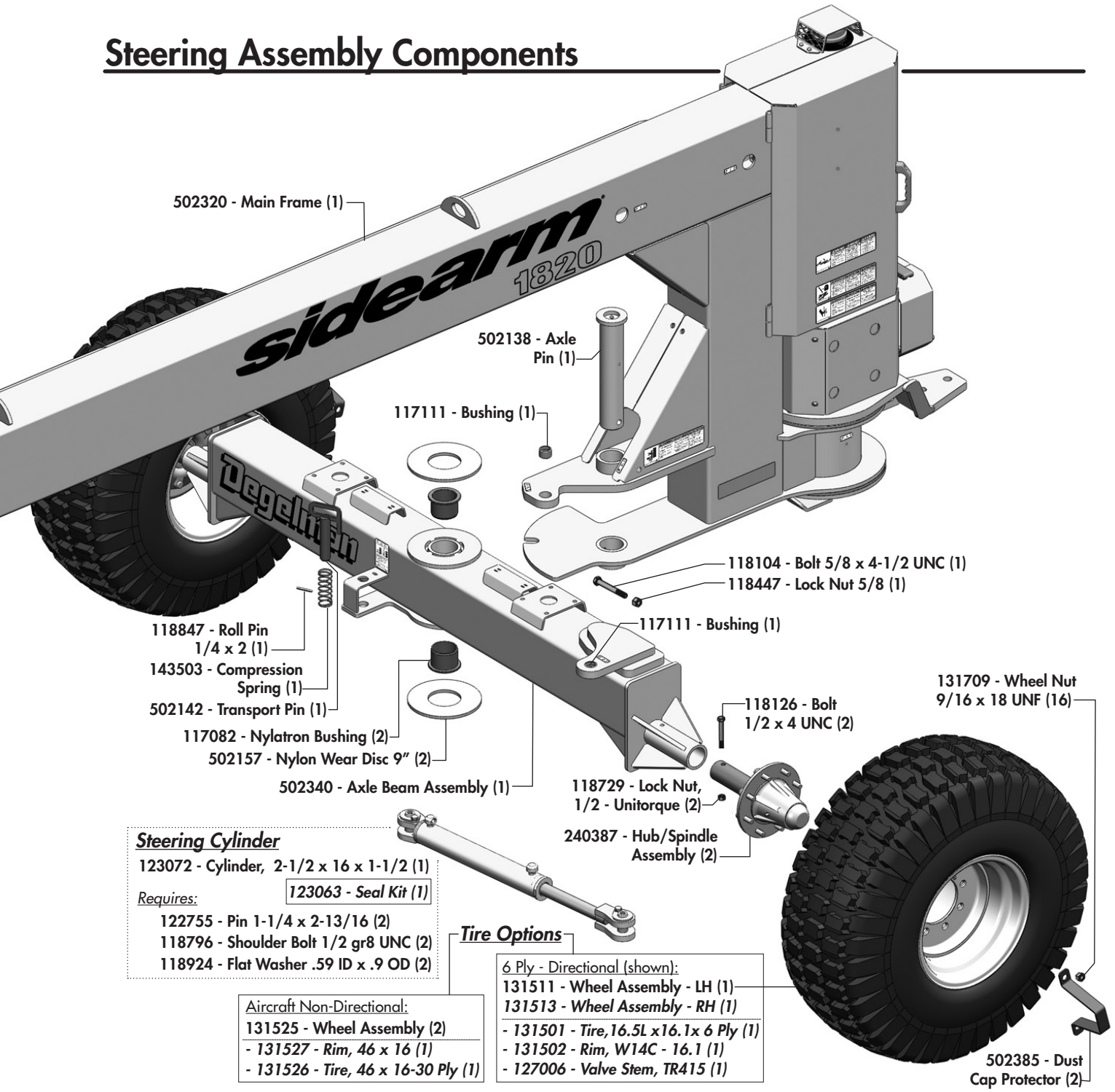

502320 - Main Frame (1)

502138 - Axle Pin (1)

117111 - Bushing (1)

118104 - Bolt 5/8 x 4-1/2 UNC (1)

118447 - Lock Nut 5/8 (1)

117111 - Bushing (1)

118847 - Roll Pin 1/4 x 2 (1)

143503 - Compression Spring (1)

502142 - Transport Pin (1)

117082 - Nylatron Bushing (2)

502157 - Nylon Wear Disc 9" (2)

502340 - Axle Beam Assembly (1)

131709 - Wheel Nut 9/16 x 18 UNF (16)

118126 - Bolt 1/2 x 4 UNC (2)

118729 - Lock Nut, 1/2 - Unitorque (2)

240387 - Hub/Spindle Assembly (2)

502385 - Dust Cap Protector (2)

Steering Cylinder

123072 - Cylinder, 2-1/2 x 16 x 1-1/2 (1)

123063 - Seal Kit (1)

Requires:

122755 - Pin 1-1/4 x 2-13/16 (2)

118796 - Shoulder Bolt 1/2 gr8 UNC (2)

118924 - Flat Washer .59 ID x .9 OD (2)

Tire Options

Aircraft Non-Directional:

131525 - Wheel Assembly (2)

- *131527 - Rim, 46 x 16 (1)*
- *131526 - Tire, 46 x 16-30 Ply (1)*

6 Ply - Directional (shown):

131511 - Wheel Assembly - LH (1)

131513 - Wheel Assembly - RH (1)

- *131501 - Tire,16.5L x16.1x 6 Ply (1)*
- *131502 - Rim, W14C - 16.1 (1)*
- *127006 - Valve Stem, TR415 (1)*

240387 - Hub/Spindle Assembly (2)

131707 - Hub CTD 812 - c/w Cups & Studs (1)

Replacement Stud: 131708 - Bolt Stud, 9/16 x 2-1/4 UNF

131180 - Bearing Cup #3720 (1)

131295 - Bearing Cone #3767 (1)

131184 - Dust Seal - CR #25100 (1)

131306 - Spindle S812 - c/w Nut (1)

118423 - Slotted Nut 1-14 UNS (1)

118835 - Cotter Pin 3/16 x 1-1/2 (1)

131706 - Hub Cap, CTD812 (1)

118553 - Flat Washer (1)

131294 - Bearing Cone #2798 (1)

131071 - Bearing Cup #2720 (1)

118336 - Grease Fitting 1/4-28 (1)

Also Requires: 131709 - Wheel Nut, 9/16 x 18 UNF (8)

Rear Hitch Components



118922 - Retaining Ring 1-1/2 (12)
141582 - Quick Coupler 3/4 ORB (6)

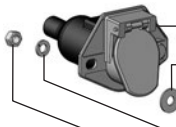

129082 - 7 Pole Socket Connector (1)
118538 - Flat Washer 5/16 (2)
118110 - Bolt 5/16 x 1 UNC (2)
118530 - Lock Washer 5/16 (2)
118427 - Nut 5/16 UNC (2)



129085 - Draw Latch (2)
- each requires -
118998 - Screw #10 x 1/2 (4)
118999 - Lock Washer #10 (4)
118000 -Nut #10 (4)

118991 - Eye Bolt 1/4 x 1" UNC (1)
118533 - Lock Washer 1/4 (1)
118402 - Nut 1/4 UNC (1)

129093 - Rubber Grommet (7)

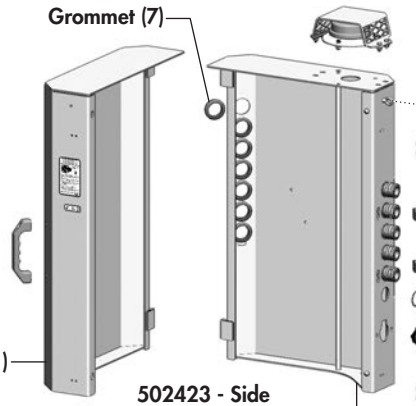

133092 - Handle (2)
mounts with...
133093 - Bolt, SHCS M8 x 30 (4)
133094 - Nut, M8 (4)
(See Details)

502422- Side Shield, Rear LH (1)
502423 - Side Shield, Rear RH (1)

118024 - Bolt 5/8 x 1-1/2" UNC (4)
(Use ***loctite 242*** if replacing)
118537 - Flat Washer, 5/8 F436 (4)

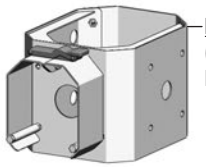

Bottom Guard
(See Exploded Detail Below)

Rear LH Door Bumper Assembly

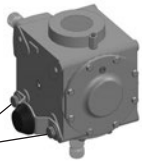

(located on bottom two holes of top gearbox)

118605 - Bolt 5/8 x 1" (2)
118537 - Flat Washer, 5/8 F436 (2)
118403 - Nut, 3/8 (1)
118503 - Lock Washer, 3/8 (1)
118511 - Flat Washer, 3/8 (1)
502172 - Bumper Plate (1)
502173 - Bumper (1)

502363 - Formed Shield - Degelman (1)

118024 - Bolt 5/8 x 1-1/2 UNC (4)
(Use ***loctite 242*** if replacing)
118537 - Flat Washer, 5/8 F436 (4)

118508 - Lock Washer 5/8 (4)
118034 - Bolt 5/8 x 3-1/2" UNC (4)

502096 - Rear Pivot Assembly (1)
502158 - Nylon Wear Disk, 16" (2)
502026 - Bushing (1)
502102 - Rear Pivot Cap (1)
118043 - Bolt 3/4 x 2" UNC (4)
118422 - Lock Nut 3/4 (4)

Bottom Guard

118009 - Bolt 1/2 x 1-1/4 UNC (4)
118504 - Lock Washer, 1/2 (4)
118587 - Flat Washer 1/2 SAE (4)
502120 - Formed Back Shield (1)

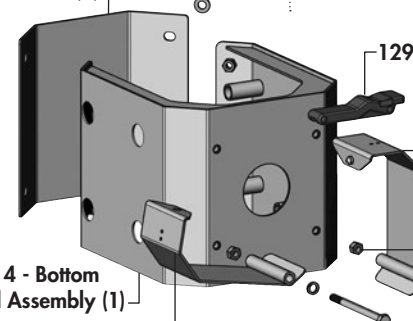

129085 - Draw Latch (1)
(See Exploded Detail Above)
502128 - Rear Ext. Shield c/w Pin (1)
118405 - Nut, 1/2 (2)
118504 - Lock Washer, 1/2 (2)
117400 - Bolt, 1/2 x 6-1/2 UNC (2)
502114 - Bottom Guard Assembly (1)
502129 - Rear Ext. Shield w/o Pin (1)

Front Covers & Details

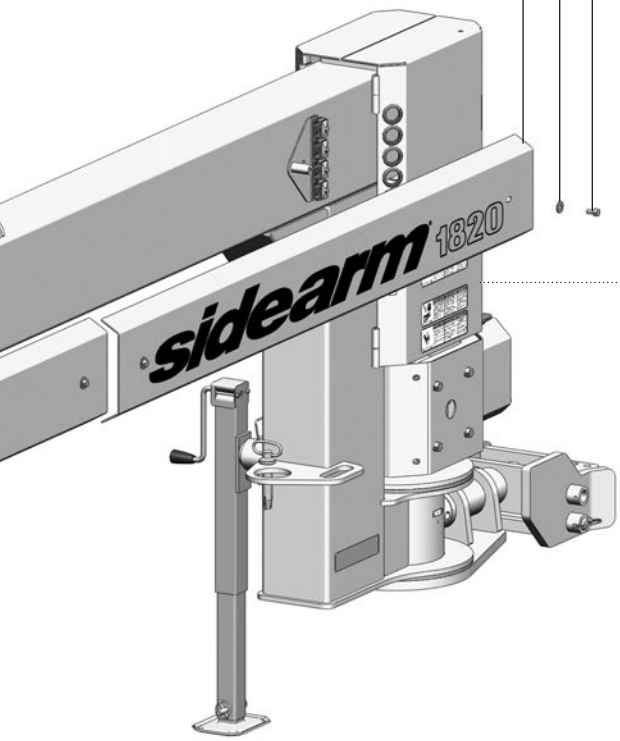

118008 - Bolt 1/2 x 1 (4)
118512 - Flat Washer 1/2 (4)

502364 - Formed Shield - Sidearm (1)

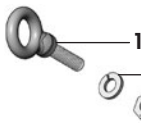

118991 - Eye Bolt 1/4 x 1" UNC (1)
118533 - Lock Washer 1/4 (1)
118402 - Nut 1/4 UNC (1)

502420 - Side Shield Front RH (1)

502421 - Side Shield Front LH (1)

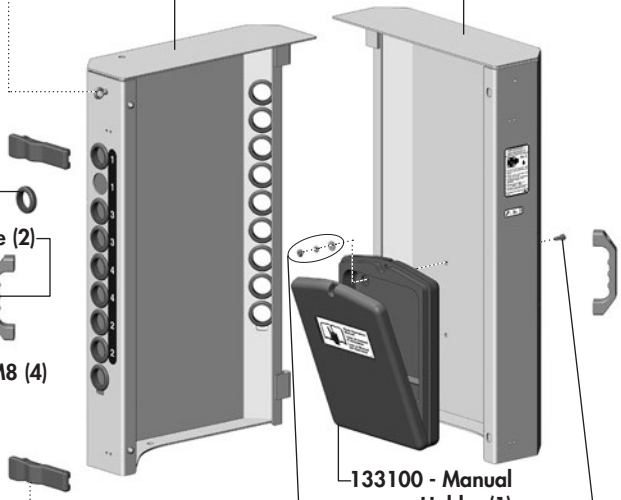

129093 - Rubber Grommet (18)

133092 - Handle (2)
mounts with...
133093 - Bolt, SHCS M8 x 30 (4)
133094 - Nut, M8 (4)

133100 - Manual Holder (1)
(Mounts with)
118402 - Nut 1/4 UNC (4)
118533 - Lock Washer 1/4 (4)
118555 - Flat Washer 1/4 (4)
118983 - Bolt, 1/4 x 3/4 (4)



129085 - Draw Latch (2)

- each requires -
118998 - Screw #10 x 1/2 (4)
118999 - Lock Washer #10 (4)
118000 -Nut #10 (4)

Hydraulic Components

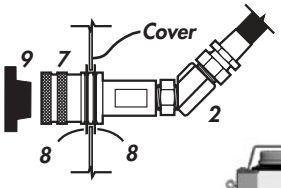

IMPORTANT: *Leave enough slack or loop in hose to ensure door can swing freely.*

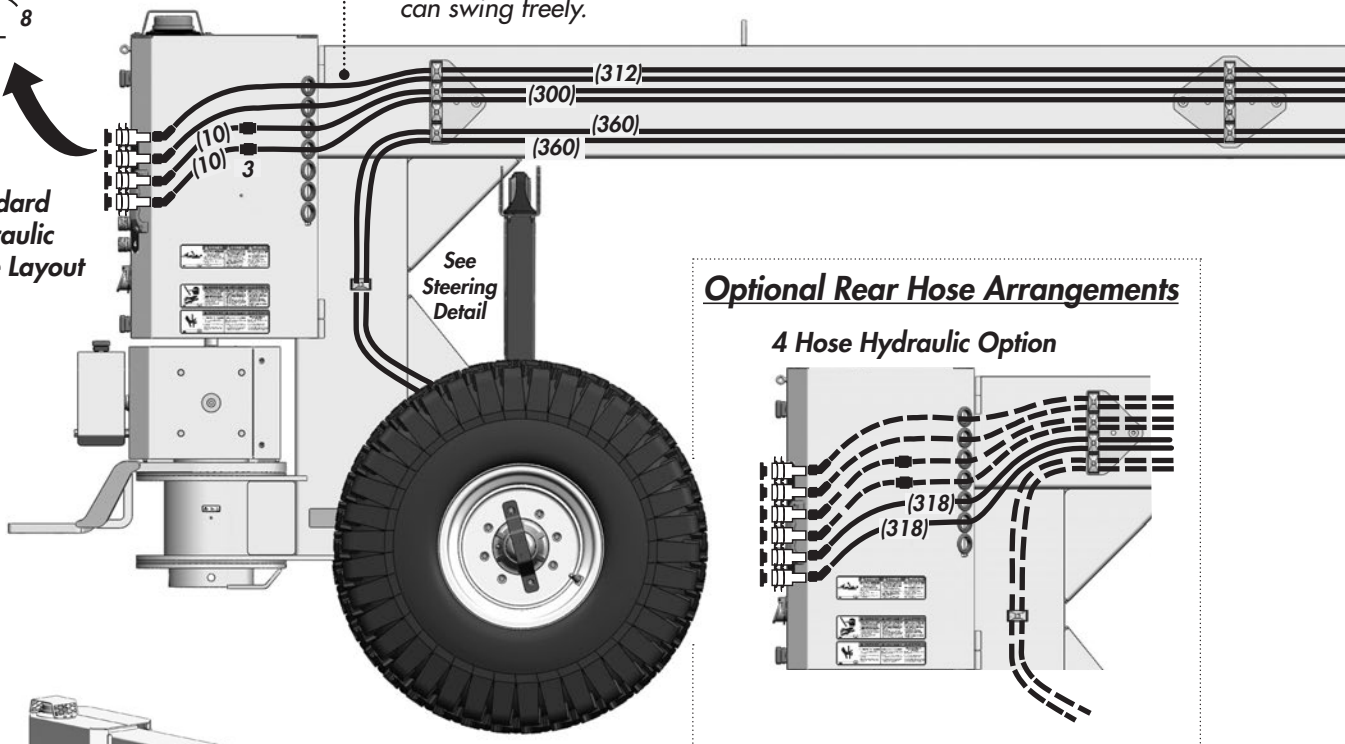

Standard Hydraulic Hose Layout

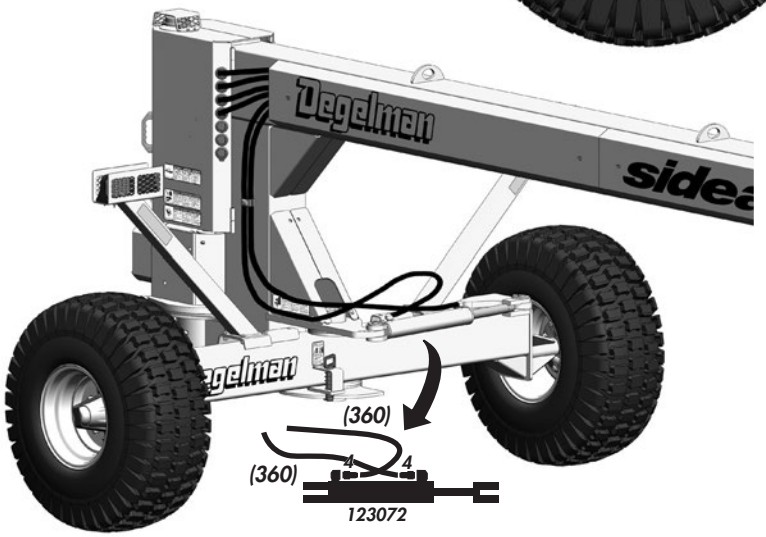

Optional Rear Hose Arrangements

4 Hose Hydraulic Option

Selector Valve Hydraulic Option

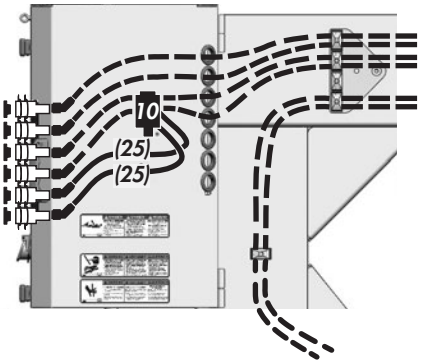

Selector Valve Components

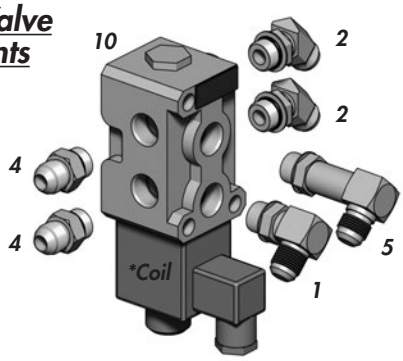

502370 - Selector Valve Assembly w/Fittings

Item	Part	Description	Qty
1	141504	90° EL 3/4m JIC x ORB	1
2	141616	45° EL 3/4m JIC x ORB	2
4	141515	Nipple 3/4m JIC x ORB	2
5	141580	90° EL 3/4m JIC x ORB x 2-1/2 lg	1
10	141584	Selector Valve 6 port 9/16 ORB	1
	(141629)	*Replaceable Coil for Selector Valve	1

Hydraulic Components

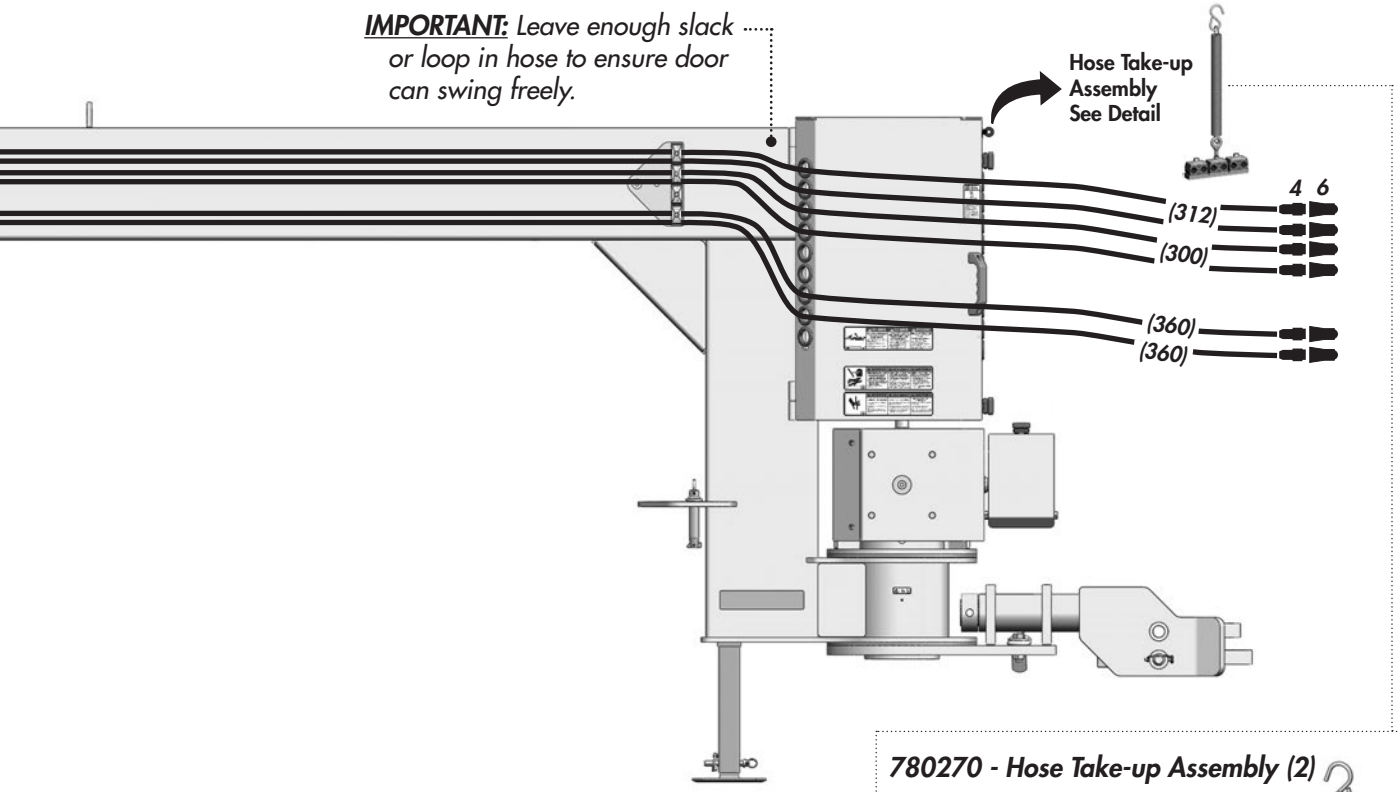

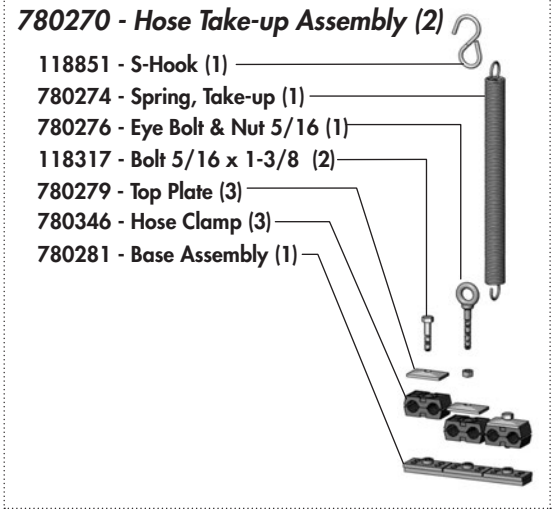

Hydraulic Hoses

Hose lengths are shown in brackets ( ), in inches.
All hoses are 2-wire braid, 3/4 - 16 JIC -F-SW ends.

Part	Description	Qty
126438	Hose 3/8 x 10	2
*126585	Hose 3/8 x 25	2 - *Selector Valve Option Only*
126604	Hose 3/8 x 300	2
126090	Hose 3/8 x 312	2
*126088	Hose 3/8 x 318	2 - *4 Hose Option Only*
126092	Hose 3/8 x 360	2

Hydraulic Fitting Components

Item	Part	Description	Qty
2	141616	45° EL 3/4m JIC x ORB	a/r
3	141517	Nipple 3/4m JIC x JIC	2
4	141515	Nipple 3/4m JIC x ORB	8
6	141581	Quick Coupler m - 3/4 ORB	6
7	141582	Quick Coupler f - 3/4 ORB	a/r
8	118922	Retaining Ring - 1 1/2	a/r
9	141578	Dust Plug - Coupler f	a/r

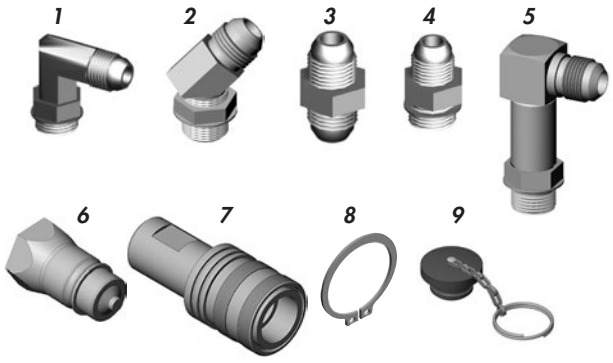

Driveline Components

119897 - Driveline, 1000 PTO (2)

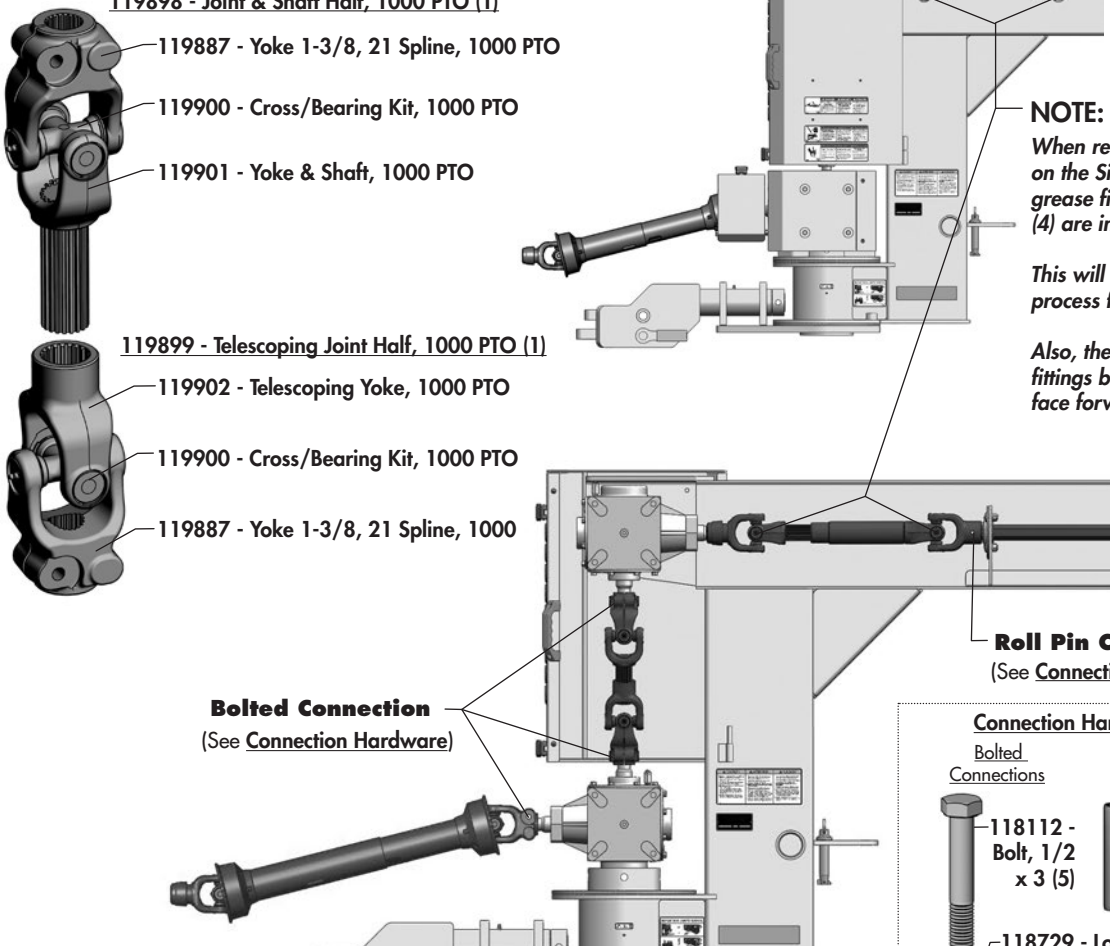

NOTE:

When re-installing these drivelines on the Sidearm ensure that the grease fittings in all access holes (4) are in line with each other.

This will simplify the greasing process for ongoing maintenance.

Also, the vertical driveline grease fittings behind the covers should face forward in this position.

Connection Hardware

Bolted Connections	Roll Pin Connections
118112 - Bolt, 1/2 x 3 (5)	118908 - Roll Pin, 3/8 x 2-1/4 (2)
118729 - Lock Nut, 1/2 - Unitorque (5)	

119875 - Driveline. 1000 PTO (1)

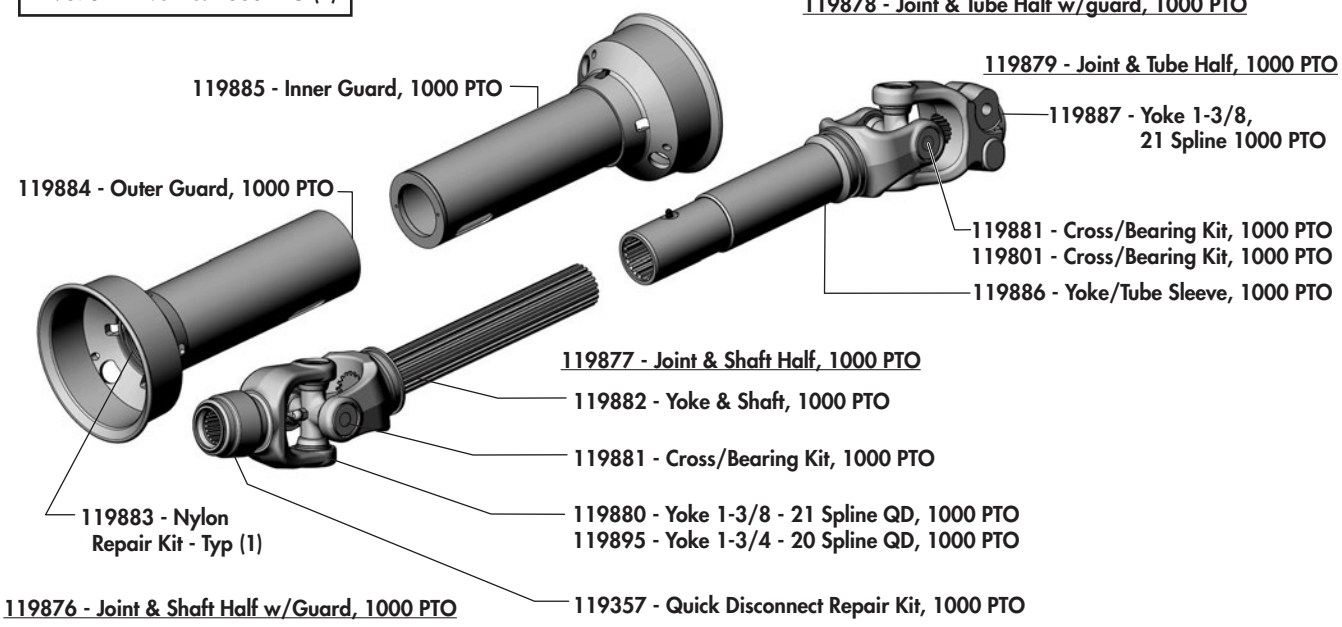

Driveline Components

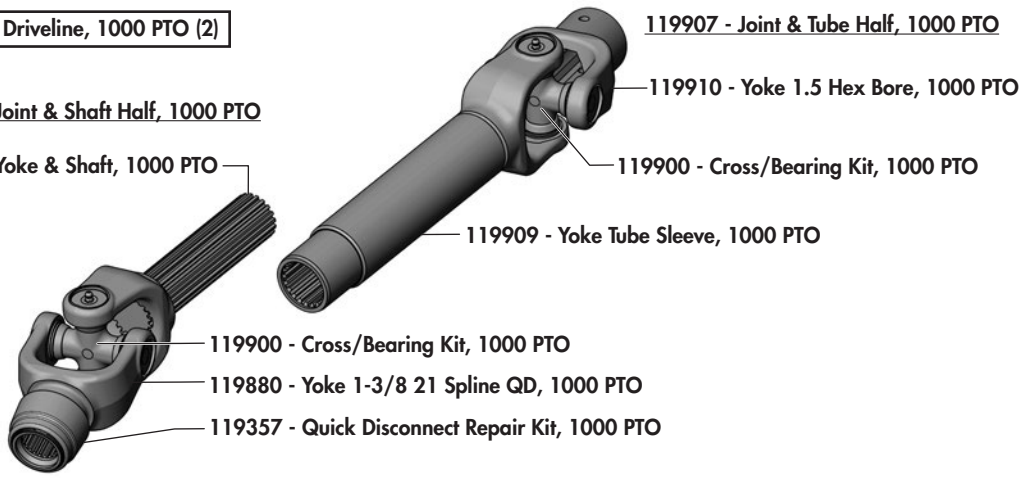

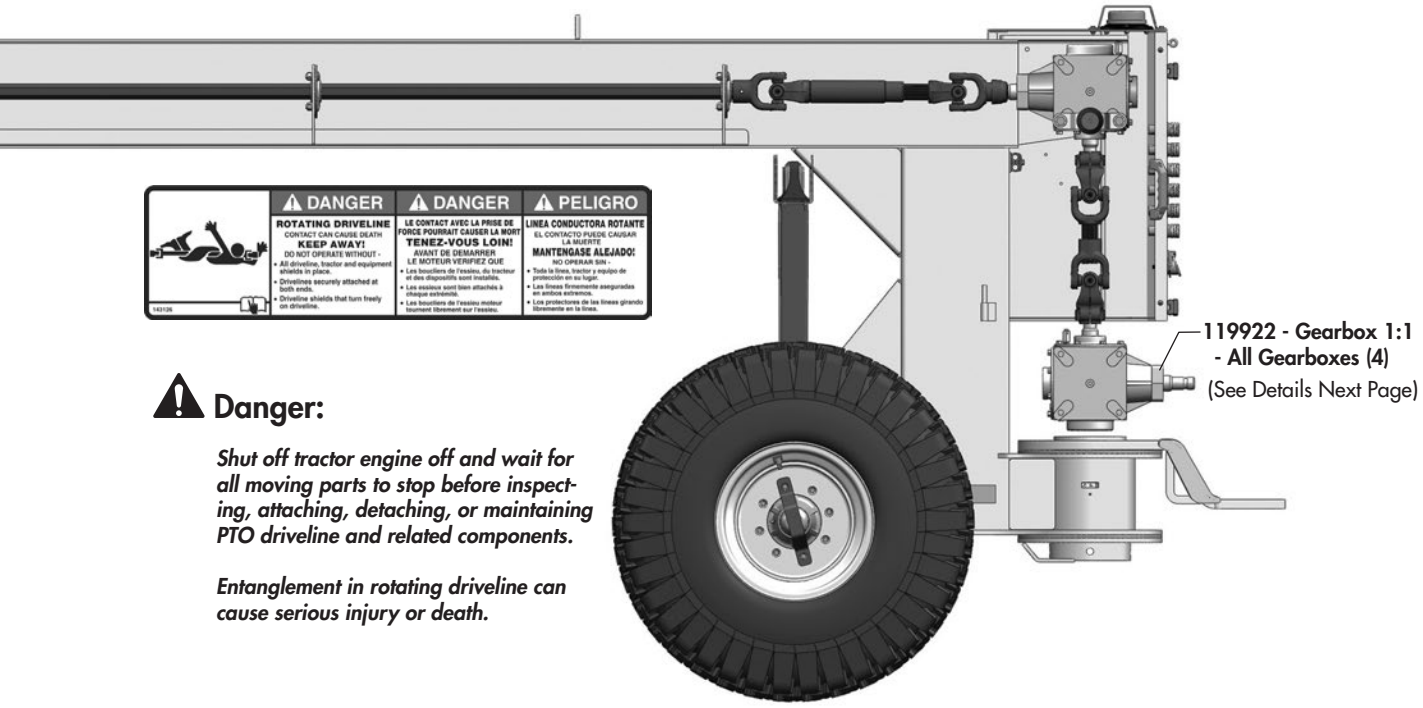

Danger:

Shut off tractor engine off and wait for all moving parts to stop before inspecting, attaching, detaching, or maintaining PTO driveline and related components.

Entanglement in rotating driveline can cause serious injury or death.

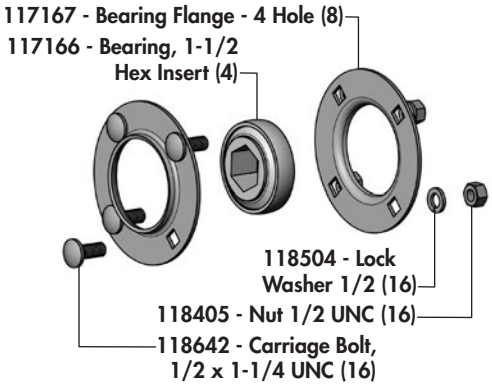

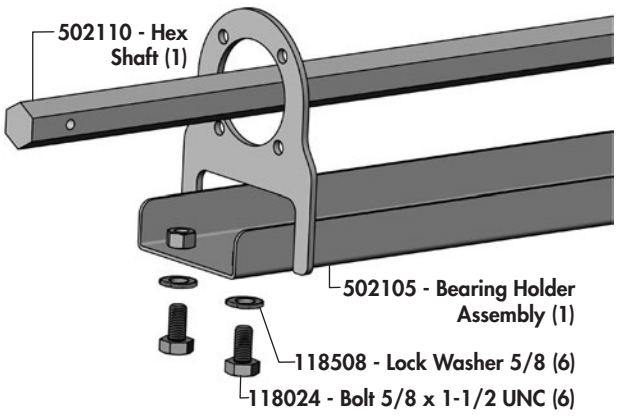

Gearbox Components

119922 - Gearbox 1:1 (1000 PTO)

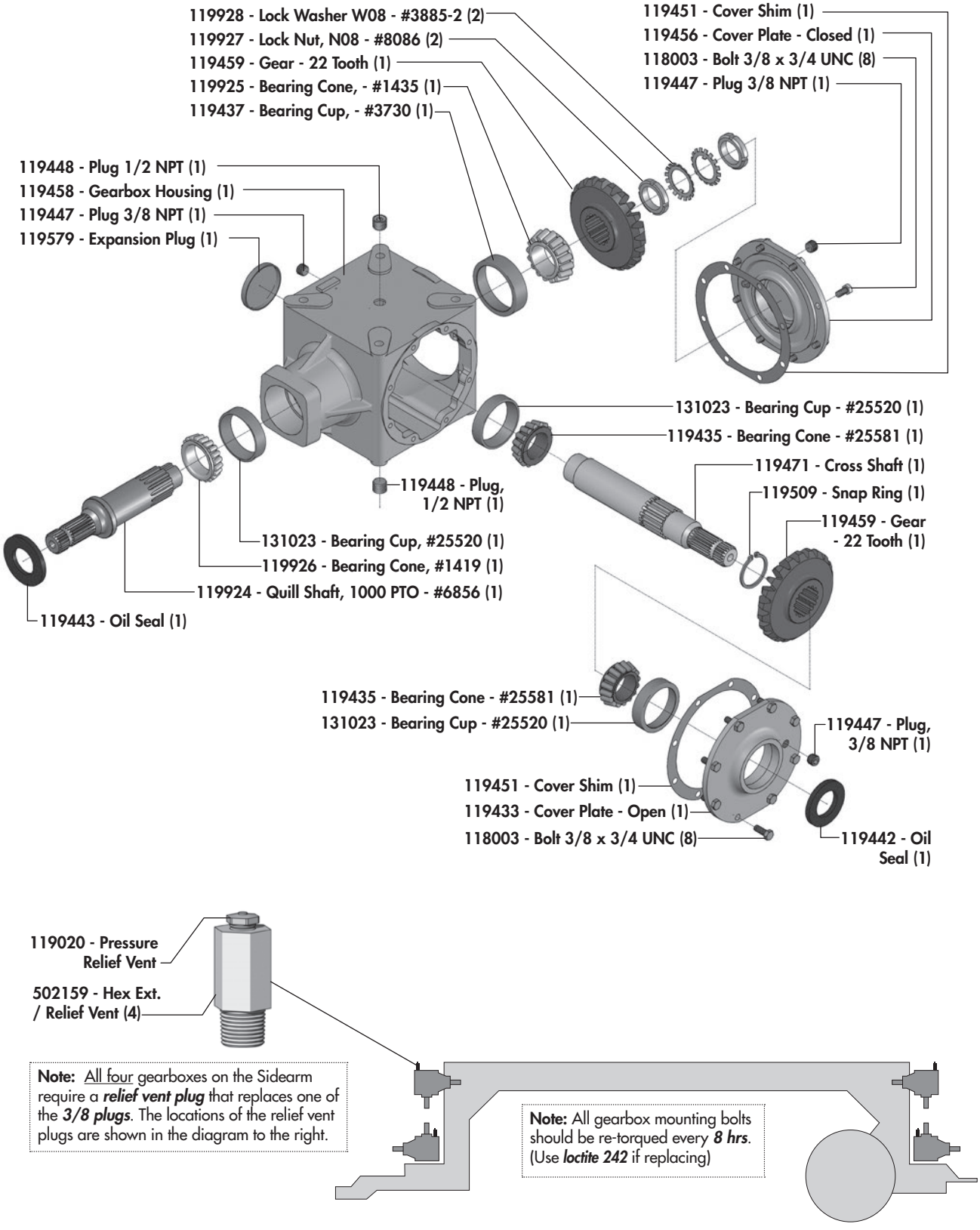

Note: <u>All four</u> gearboxes on the Sidearm require a ***relief vent plug*** that replaces one of the ***3/8 plugs***. The locations of the relief vent plugs are shown in the diagram to the right.

Note: All gearbox mounting bolts should be re-torqued every ***8 hrs***. (Use ***loctite 242*** if replacing)

Attachment / Accessories

SELECTOR VALVE KIT

502303 Selector Valve Kit - includes fittings, hardware, wiring, & switch box assembly

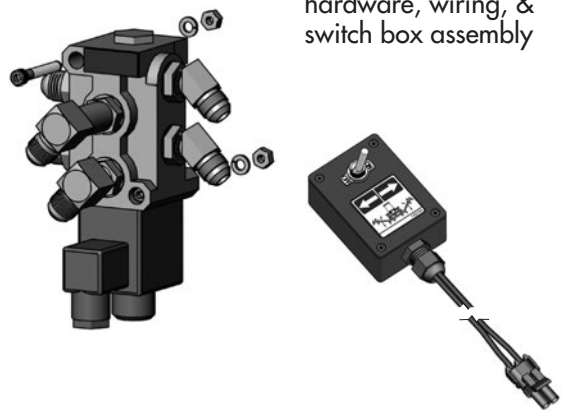

CLEARANCE LIGHT KIT

502304 Clearance Light Kit - includes LH & RH LED lamps, support stands, hardware, & wiring.

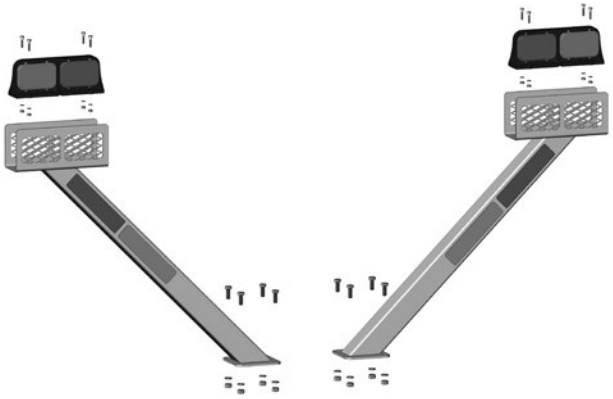

STROBE LIGHT KIT

502305 Strobe Light Kit - includes LED strobe lamp, wiring, cover & hardware.



TRAILER COUPLER HITCH

502146 Trailer Coupler Hitch

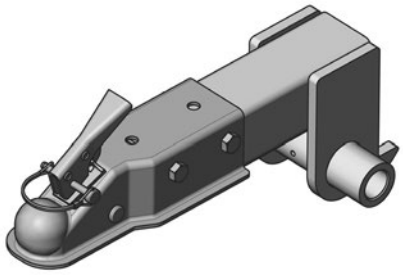

502120 2″ Hitch Ball (Sold Separately)



CUTTER ADAPTER HITCHES



502161 - Degelman Adaptor Assembly (shown) **(1)**
comes with...
118074 - Bolt 1 x 4 GR8 (2)
131020 - Flat Washer, 1 F436 (4)
118456 - Lock Nut, 1 (2)

Other adaptors *(similar to above)*

502170 - Bush Hog Adaptor Assembly (1)
comes with...
118073 - Bolt 1 x 3-1/2 GR8 (2)
131020 - Flat Washer, 1 F436 (4)
118456 - Lock Nut, 1 (2)

502220 - Schulte Adaptor Assembly, 1″ Pin (1) *- or -*
502217 - Schulte Adaptor 2023 XH1500, 1-1/4″ Pin (1)
comes with...
118074 - Bolt 1 x 4 GR8 (2)
131020 - Flat Washer, 1 F436 (4)
118456 - Lock Nut, 1 (2)

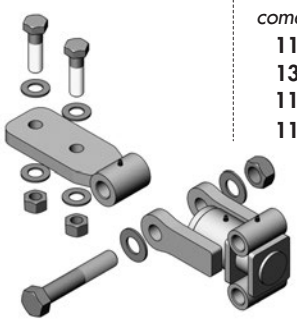

502240 - John Deere CX/HX Adaptor Assembly (1)
comes with...
118073 - Bolt 1 x 3-1/2 GR8 (2)
131020 - Flat Washer, 1 F436 (4)
118456 - Lock Nut, 1 (2)
118371 - Bolt 1-1/4 x 7 GR8 (1)
131206 - Flat Washer, 1-1/4 F436 (2)
118445 - Lock Nut, 1-1/4 (1)

Other adapter hitches are available upon request.

Warranty

2 Year
Limited Warranty

Degelman Industries LP ("Degelman") warrants to the original purchaser of a new Degelman 1820 Sidearm offset hitch, purchased from an authorized Degelman dealer, that the equipment will be free from defects in material and workmanship for a period of two (2) years from the date of delivery, for non-commercial use (including farm, institutional, government, and municipality) and (1) year from the date of delivery for commercial use. The obligation of Degelman to the purchaser under this warranty is limited to the repair or replacement of defective parts in the first year and to the provision, but not the installation of replacement parts in the second year. Degelman reserves the right to inspect any equipment or parts which are claimed to have been defective in material or workmanship.

Replacement or repair parts installed in the equipment covered by this limited warranty are warranted for ninety (90) days from the date of delivery of such part or the expiration of the applicable new equipment warranty period, which ever occurs later. Warranted parts shall be provided at no cost to the user at an authorized Degelman dealer during regular working hours. Warranted replacement parts will either be replaced or rebuilt at Degelman's discretion.

Disclaimer of implied warranties & consequential damages

This warranty shall not be interpreted to render Degelman Industries LP liable for injury, death, property damage or damages of any kind, whether direct, consequential, or contingent to property. Without limiting the generality of the foregoing, Degelman shall not be liable for damages resulting from any cause beyond its reasonable control, including, without limitation, loss of crops, any expense or loss of labour, supplies, rental machinery or loss of use.

No other warranty of any kind whatsoever, express or implied is made with respect to this sale; and all implied warranties of merchantability and fitness for a particular purpose which exceed the obligations set forth in this written warranty are hereby disclaimed and excluded from this sale. This exclusion shall not apply in any jurisdiction where it is not permitted by law.

This limited warranty shall not apply:

1. If, in the sole opinion of Degelman, the unit has been subjected to misapplication, abuse, misuse, negligence or accident.
2. If parts not made or supplied by Degelman have been used in the connection with the unit, if, in the sole judgement of Degelman such use affects its performance, safety, stability or reliability.
3. If the unit has been altered or repaired outside of an authorized Degelman dealership in a manner which, in the sole judgement of Degelman, affects its performance, safety, stability or reliability.
4. To normal maintenance service and normal replacement items such as gearbox lubricant, hydraulic fluids, and seals.

No employee or representative of Degelman Industries LP is authorized to change this limited warranty in any way or grant any other warranty unless such change is made in writing and signed by the Degelman Service Manager.

This limited warranty is subject to any future availability of supply, which may directly affect Degelman's ability to obtain materials or manufacture replacement parts.

Degelman reserves the right to make improvements in design or changes in specifications at any time, without incurring obligations to owners of equipment previously delivered.

This limited warranty is subject to compliance by the customer to the enclosed *Retail Customer's Responsibility Under Degelman Warranty.*

Make certain the warranty registration card has been forwarded to:

Degelman Industries LP
Box 830 - 272 Industrial Dr.
Regina, SK, Canada
S4P 3B1

© 2025 Degelman Industries LP