Degelman

OPERATOR & PARTS MANUAL

landroller 2036

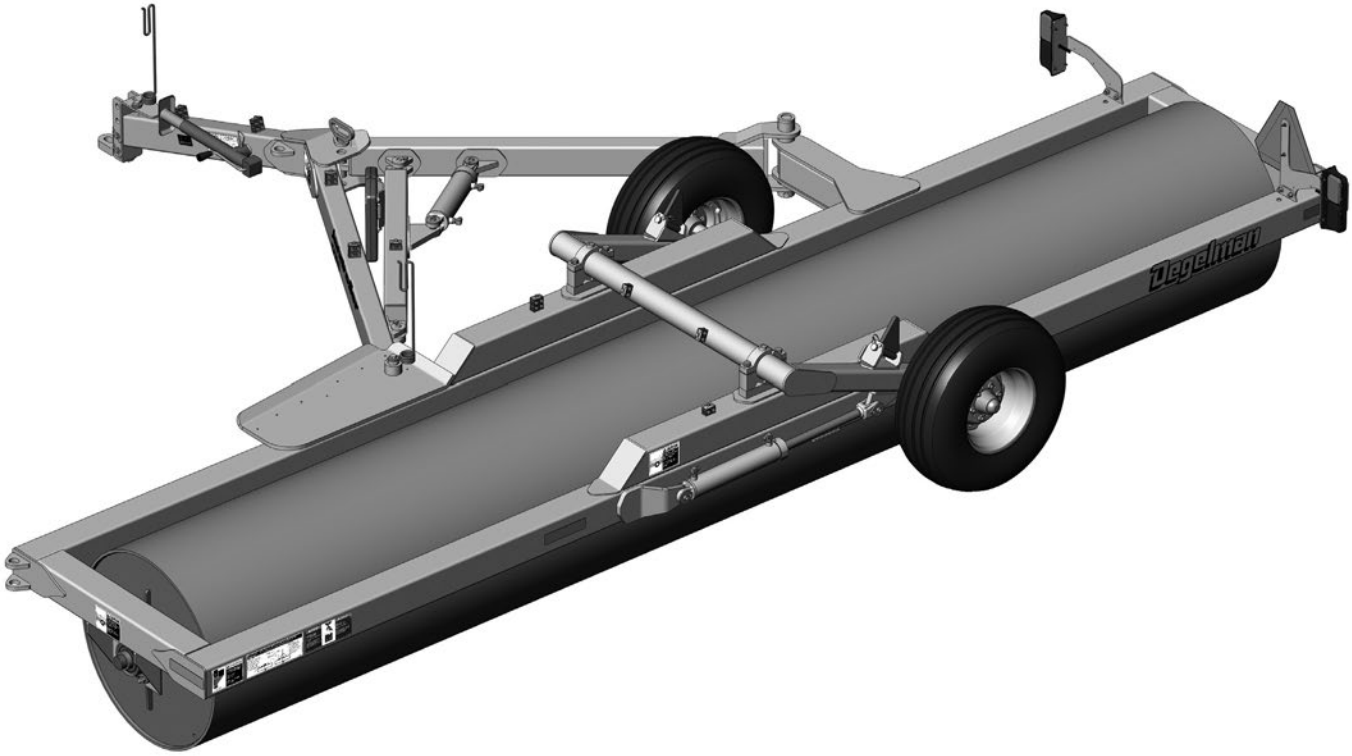

143044 v2.3

DEGELMAN INDUSTRIES LP
BOX 830-272 INDUSTRIAL DRIVE,
REGINA, SK, CANADA, S4P 3B1
FAX 306.543.2140 PH 306.543.4447
1.800.667.3545 DEGELMAN.COM

LANDROLLER
SINGLE DRUM
LR2036

Degelman

landroller
2036

TABLE OF CONTENTS - OPERATORS SECTION

Introduction	*1*
Safety	*2*
Operation	*4*
Transport to Field Position	*7*
Field to Transport Position	*8*
Service & Maintenance	*9*
Maintenance Checklist	*11*
Repair - Hydraulic Cylinder	*12*
Repair - Wheel Hub	*15*

PARTS SECTION

Overview & Decal Locations	*17*
Roller Frame Components	*18*
Hitch Pole & Swing Arm Components	*19*
Rockshaft, Wheel, & Light Components	*20*
Hub & Spindle, Cylinder Components	*21*
Hydraulic Routing	*22*
Electrical Routing	*23*
Warranty	*25*

DEGELMAN INDUSTRIES LP
BOX 830-272 INDUSTRIAL DRIVE,
REGINA, SK, CANADA, S4P 3B1
FAX 306.543.2140 PH 306.543.4447
1.800.667.3545 DEGELMAN.COM

IMPORTANT:



READ MANUAL

Introduction

landroller
2036

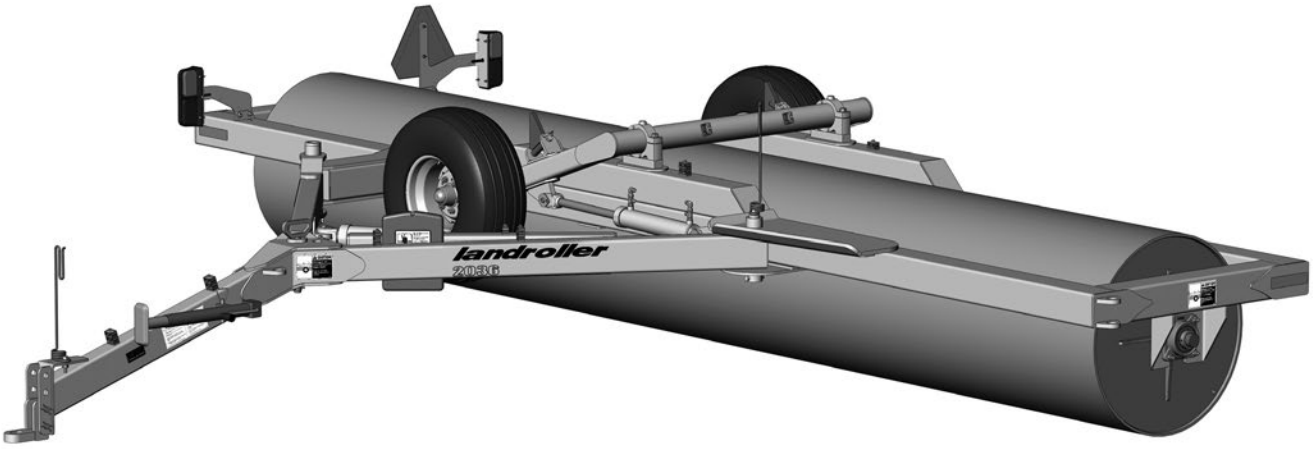

CONGRATULATIONS on your choice of a Degelman Landroller to complement your farming operation. It has been designed and manufactured to meet the needs of a discerning agricultural market for increasing yields for high quality pulse crops and preparing the perfect bed for haying, grasses and silage. Degelman rollers provide a smooth and level surface for faster, easier harvest operations and better seed-to-soil contact. Use this manual as your first source of information about this machine.

Safe, efficient and trouble free operation of your Degelman Landroller requires that you and anyone else who will be operating or maintaining it, read and understand the Safety, Operation, Maintenance and Troubleshooting information contained within this manual.

Keep this manual handy for frequent reference and to pass on to new operators or owners. Call your Degelman Dealer if you need assistance, information, or additional copies of the manual.

OPERATOR ORIENTATION - The directions left, right, front and rear, as mentioned throughout the manual, are as seen from the tractor drivers' seat and facing in the direction of travel.

Why is SAFETY important to YOU?

3 BIG Reasons:

- **Accidents Can Disable and Kill**
- **Accidents Are Costly**
- **Accidents Can Be Avoided**



SAFETY ALERT SYMBOL

The **Safety Alert Symbol** identifies important safety messages applied to the Landroller and in this manual. When you see this symbol, be alert to the possibility of **injury or death**. Follow the instructions provided on the safety messages.

The **Safety Alert Symbol** means:

ATTENTION!
BECOME ALERT!
YOUR SAFETY IS INVOLVED!

SIGNAL WORDS

Note the use of the Signal Words: **DANGER**, **WARNING**, and **CAUTION** with the safety messages. The appropriate Signal Word has been selected using the following guidelines:

DANGER

DANGER: Indicates an imminently hazardous situation that, if not avoided, **WILL** result in death or serious injury if proper precautions are not taken.

WARNING

WARNING: Indicates a potentially hazardous situation that, if not avoided, **COULD** result in death or serious injury if proper precautions are not taken.

CAUTION

CAUTION: Indicates a potentially hazardous situation that, if not avoided, **MAY** result in minor or moderate injury if proper practices are not taken, or, serves as a reminder to follow appropriate safety practices.

SAFETY

YOU are responsible for the safe operation and maintenance of your Degelman Landroller. **YOU** must ensure that you and anyone else who is going to operate, maintain or work around the Landroller be familiar with the operating and maintenance procedures and related **SAFETY** information contained in this manual. This manual will take you step-by-step through your working day and alerts you to all good safety practices that should be adhered to while operating this equipment.

Remember, **YOU** are the key to safety. Good safety practices not only protect you but also the people around you. Make these practices a working part of your safety program. Be certain that **EVERYONE** operating this equipment is familiar with the recommended operating and maintenance procedures and follows all the safety precautions. Most accidents can be prevented. Do not risk injury or death by ignoring good safety practices.

- Landroller owners must give operating instructions to operators or employees before allowing them to operate the Landroller, and at least annually thereafter per OSHA regulation 1928.51.
- The most important safety device on this equipment is a SAFE operator. It is the operator's responsibility to read and understand ALL Safety and Operating instructions in the manual and to follow these. All accidents can be avoided.
- A person who has not read and understood all operating and safety instructions is not qualified to operate the machine. An untrained operator exposes himself and bystanders to possible serious injury or death.
- Do not modify the equipment in any way. Unauthorized modification may impair the function and/or safety and could affect the life of the equipment.
- Think SAFETY! Work SAFELY!

GENERAL SAFETY

1. Read and understand the Operator's Manual and all safety signs before operating, maintaining or adjusting the Landroller.



2. Install and properly secure all shields and guards before operating. Use hitch pin with a mechanical locking device.
3. Have a first-aid kit available for use should the need arise and know how to use it.



4. Have a fire extinguisher available for use should the need arise and know how to use it.



5. Wear appropriate protective gear. This list includes but is not limited to:
   - A hard hat
   - Protective shoes with slip resistant soles
   - Protective glasses or goggles
   - Heavy gloves
   - Wet weather gear
   - Hearing protection
   - Respirator or filter mask

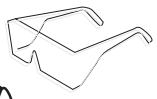



6. Clear the area of people, especially small children, and remove foreign objects from the machine before starting and operating.
7. Do not allow riders.
8. Stop tractor engine, set park brake, remove ignition key and wait for all moving parts to stop before servicing, adjusting, repairing or unplugging.
9. Review safety related items with all operators annually.

Operation

TO THE NEW OPERATOR OR OWNER

The Degelman Landroller is designed to provide a smooth and level surface.

It is the responsibility of the owner or operator to read this manual carefully to learn how to operate the machine safely. Safety is everyone's business. By following safe operating practices, a safe environment is provided for the operator and bystanders.

By following the operating instructions in conjunction with a good maintenance program your machine will provide many years of trouble-free service.

OPERATING SAFETY

1. Read and understand the Operator's Manual and all safety signs before using.
2. Stop tractor engine, set park brake, remove ignition key and wait for all moving parts to stop before servicing, adjusting, repairing or unplugging.
3. Keep hands, feet, hair and clothing away from all moving and/or rotating parts.
4. Do not allow riders on the Landroller or tractor during operation or transporting.
5. Keep all shields and guards in place when operating *(if applicable)*.
6. Clear the area of all bystanders, especially children, before starting.
7. Do not operate machine on overly steep side hills or slopes.
8. Be careful when working around or maintaining a high-pressure hydraulic system. Ensure all components are tight and in good repair before starting.
9. Clean all reflectors, lights and the SMV sign before transporting on a highway or public road. Be sure to check with local highway authorities and comply with their lighting requirements.

Transport Position

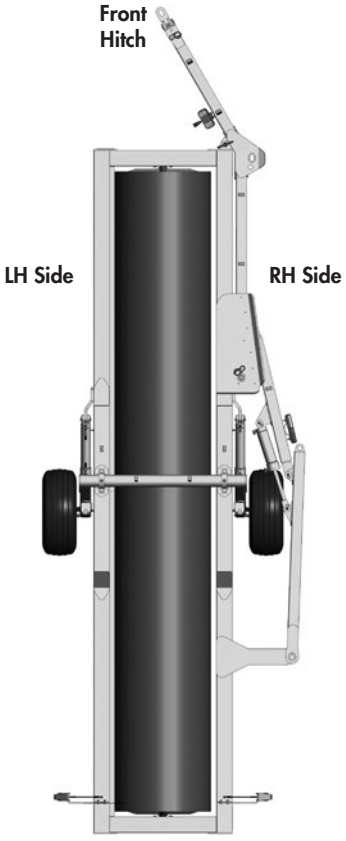

Field Position

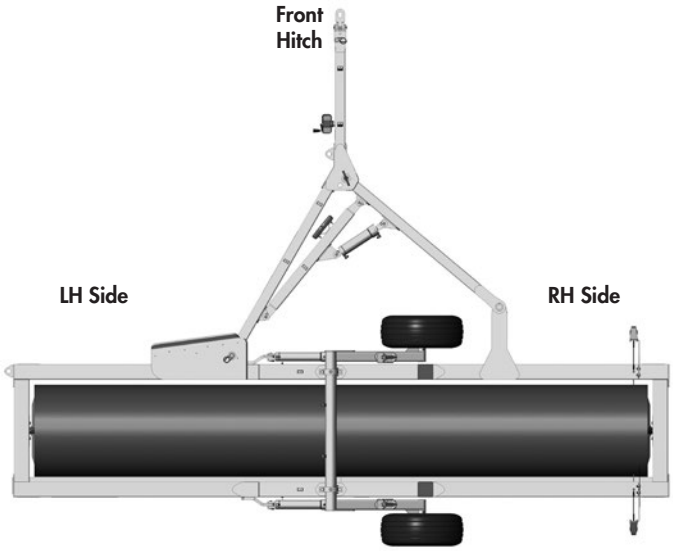

BREAK-IN

Although there are no operational restrictions on the Landroller when it is new, there are some checks that should be done when using the machine for the first time, follow this procedure:

⚠ **IMPORTANT:** *It is important to follow the Break-In procedures especially those listed in the "Before using" section below to avoid damage:*

A. Before using:

1. Read Safety Info. & Operator's Manual.
2. Complete steps in "Pre-Operation Checklist".
3. Lubricate all grease points.
4. Check all bolt tightness.

B. After operating for 2 hours:

1. Check all hardware. Tighten as required.
2. Check all hydraulic system connections. Tighten if any are leaking.

PRE-OPERATION CHECKLIST

It is important for both personal safety and maintaining good operational condition of the machine that the pre-operational checklist be followed.

Before operating the machine and each time thereafter, the following areas should be checked off:

1. Lubricate the machine per the schedule outlined in the "Maintenance Section".
2. Use only a tractor with adequate power to pull the Landroller under ordinary operating conditions.
3. Ensure that the machine is properly attached to the tractor using a drawbar pin with provisions for a mechanical retainer. Make sure that a retainer such as a Klik pin is installed.

   NOTE: *It is important to pin the draw bar in the central location only.*

4. Before using, inflate tires to:
   12.5L x15 - 12 PLY: ***90 PSI (620 kPa)***
   Previous: 12.5L x15 - 8 PLY: ***32 PSI (220 kPa)***
5. Ensure that a safety chain is installed on the hitch.
6. Check oil level in the tractor hydraulic reservoir. Top up as required.
7. Inspect all hydraulic lines, hoses, fittings and couplers for tightness. Tighten if there are leaks. Use a clean cloth to wipe any accumulated dirt from the couplers before connecting to the tractor's hydraulic system.

HOOK-UP / UNHOOKING

The Landroller should always be parked on a level, dry area that is free of debris and foreign objects. Follow this procedure to hook-up:

1. Clear the area of bystanders and remove foreign objects from the machine and working area.
2. Make sure there is enough room to back the tractor up to the trailer hitch.
3. Start the tractor and slowly back it up to the hitch point.
4. Stop the tractor engine, place all controls in neutral, set park brake and remove ignition key before dismounting.
5. Use the jack to raise or lower the hitch to align with the drawbar.
6. Install a drawbar pin with provisions for a mechanical retainer such as a KLIK pin. Install the retainer.
7. Install a safety chain between the tractor and the hitch.
8. Connect the hydraulics. To connect, proceed as follows:

- Use a clean cloth or paper towel to clean the couplers on the ends of the hoses. Also clean the area around the couplers on the tractor. Remove the plastic plugs from the couplers and insert the male ends.
- Be sure to match the pressure and return line to one valve bank.

9. Connect lights *(electrical socket plug)* to tractor.
10. Raise the hitch jack and rotate it 90° to place in its stowed position.
11. When unhooking from the tractor, reverse the above procedure.

TRANSPORT SAFETY

1. Read and understand ALL the information in the Operator's Manual regarding procedures and SAFETY when operating the Landroller in the field/yard or on the road.
2. Check with local authorities regarding machine transport on public roads. Obey all applicable laws and regulations.
3. Always travel at a safe speed. Use caution when making corners or meeting traffic.
4. Make sure the SMV *(Slow Moving Vehicle)* emblem and all the lights and reflectors that are required by the local highway and transport authorities are in place, are clean and can be seen clearly by all overtaking and oncoming traffic.
5. Keep to the right and yield the right-of-way to allow faster traffic to pass. Drive on the road shoulder, if permitted by law.
6. Always use hazard warning flashers on tractor when transporting unless prohibited by law.
7. Always use a pin with provisions for a mechanical retainer and a safety chain when attaching to a tractor or towing vehicle.

TRANSPORTING

Use the following guidelines while transporting the Landroller:

1. Use a safety chain.
2. Ensure all transport locks are securely in place.
3. Be sure hazard lights are flashing and SMV decal is visible.

⚠ **IMPORTANT:** *UNDER NO CIRCUMSTANCES SHOULD THERE EVER BE RIDERS WHILE THE LANDROLLER IS IN TRANSPORT.*



TRANSPORT TO FIELD POSITION

1. Drive the landroller onto level ground so it is straight behind the tractor. Apply tractor's park brake.

2. Remove the Transport Pin and place it in the holding position.

3. Disengage the wheel transport bars. *(2 located near wheels under roller frame).* You may need to activate *(extend)* the wheel cylinders to allow removal of the wheel transport bars.

   Move the transport bars into the disengaged position and secure with lock-pin.

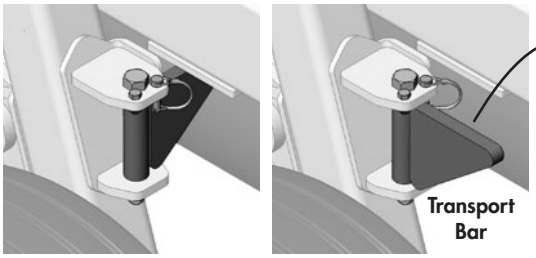

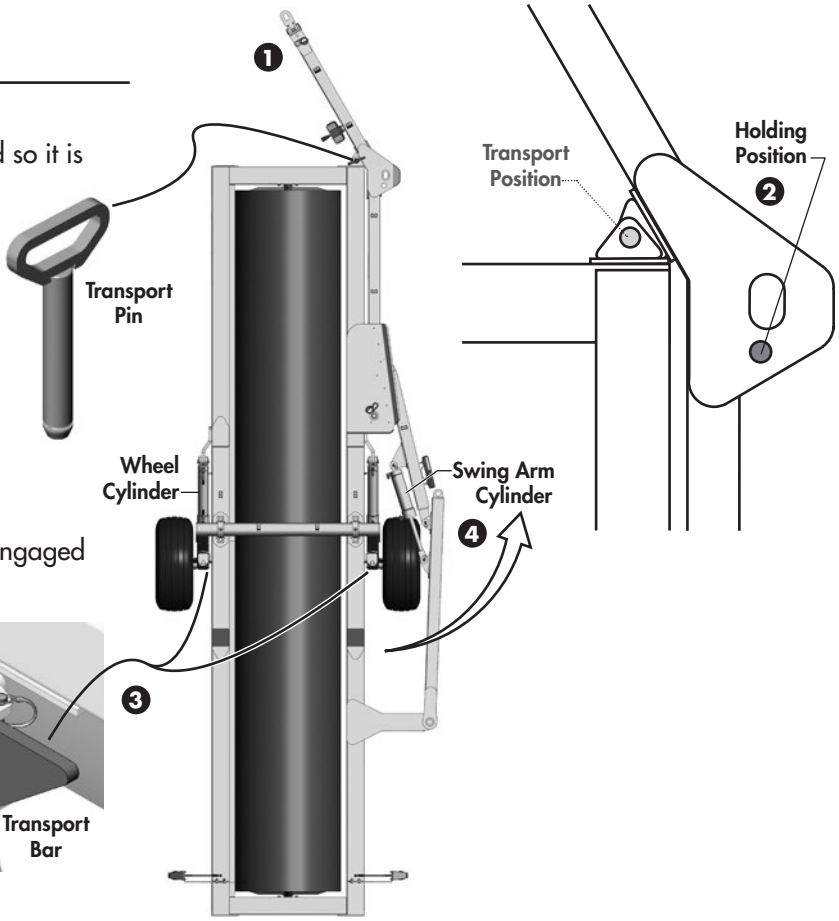

4. Ensure people are clear away from the Landroller area. Close *(retract)* the Swing Arm cylinder to pivot the roller and frame 90° into field position.

5. Position the Transport Pin into field position to secure the hitch pole frame.

6. Extend the wheel cylinders raising the wheel assemblies and lowering the roller to the ground. Ensure the wheel cylinders are fully extended.

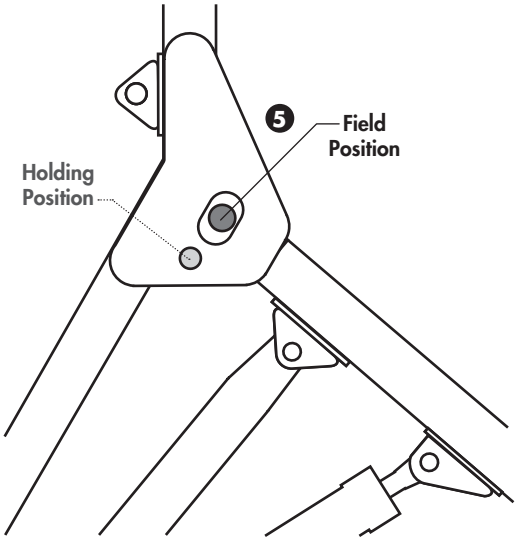

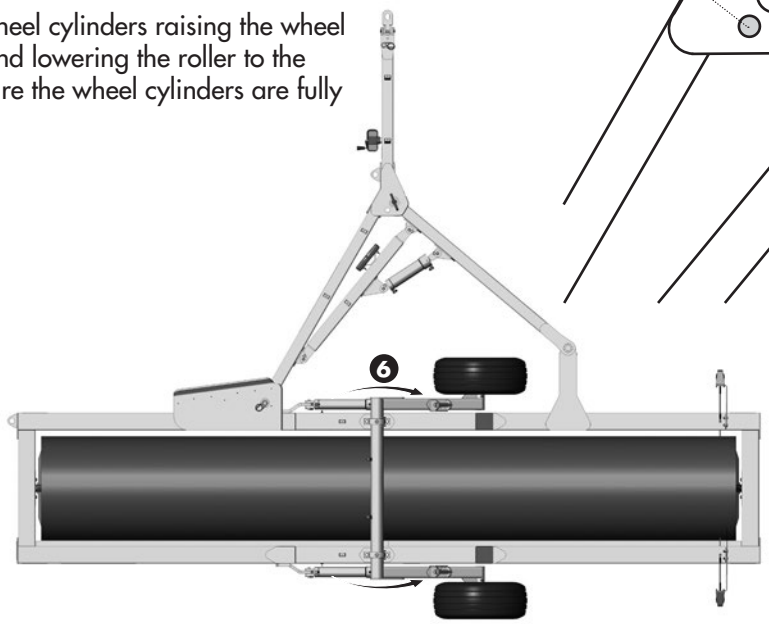

FIELD TO TRANSPORT POSITION

1. Drive the landroller onto level ground so it is straight behind the tractor. Apply tractor's park brake.

2. Retract/Close the wheel cylinders lowering the wheel assemblies and raising the roller off the ground. Ensure the wheel cylinders are fully closed.

3. Remove the Transport Pin and place it in the holding position.

4. Ensure people are clear away from the Landroller area. Open *(extend)* the Swing Arm cylinder to pivot the roller and frame 90° into transport position.

5. Position the Transport Pin into transport position to secure the hitch pole frame.

6. Engage the wheel transport bars. *(2 located near wheels under roller frame)*. You may need to activate *(retract/close)* the wheel cylinders to allow positioning of the wheel transport bars.

   Move the transport bars into the engaged position and secure with lock-pin.

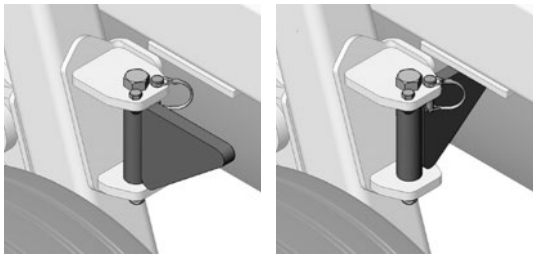

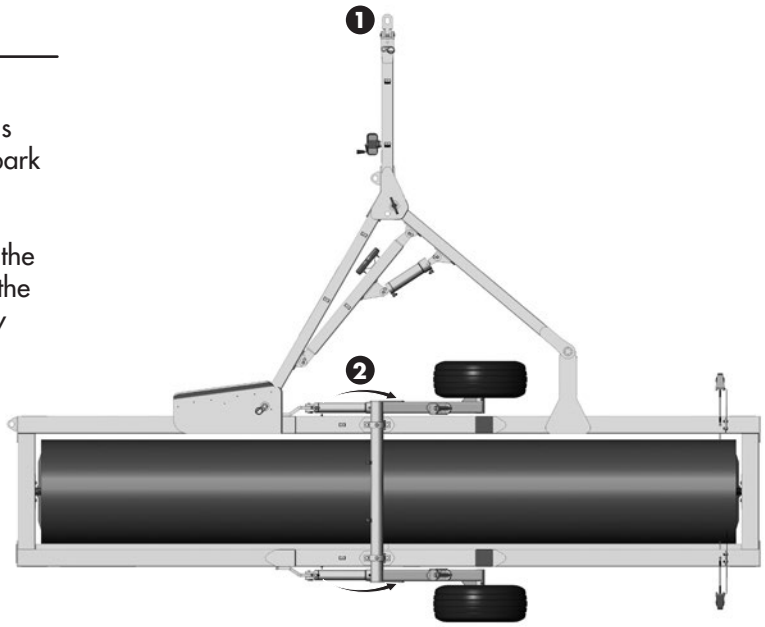

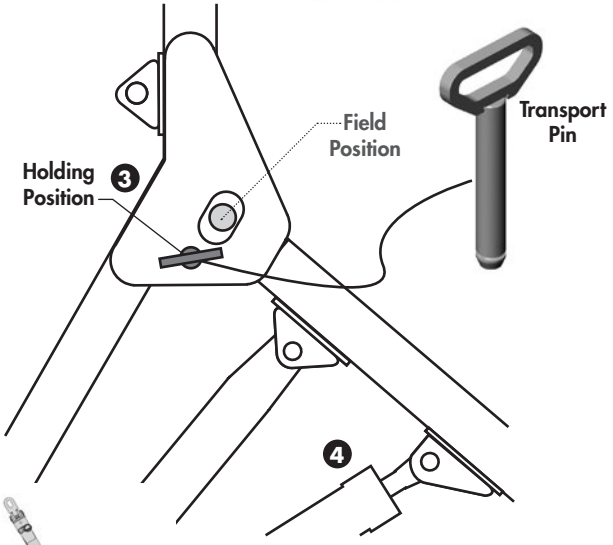

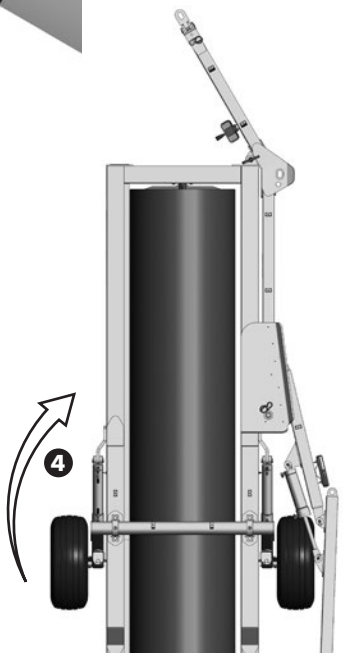

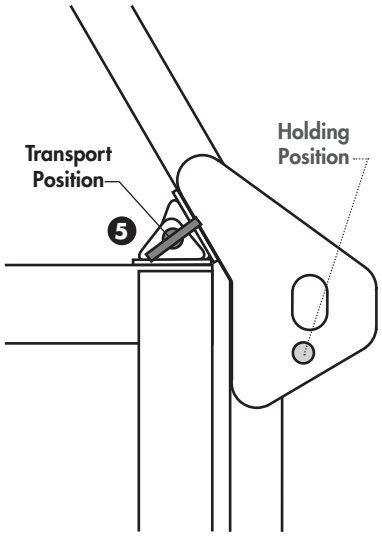

MAINTENANCE SAFETY

1. Review the Operator's Manual and all safety items before working with, maintaining or operating the Landroller.

2. Stop the tractor engine, set park brake, remove ignition key and wait for all moving parts to stop before servicing, adjusting, repairing or unplugging.

3. Keep hands, feet, clothing and hair away from all moving and/or rotating parts.

4. Clear the area of bystanders, especially children, when carrying out any maintenance and repairs or making any adjustments.

5. Place safety stands or large blocks under the frame before removing tires or working beneath the machine.

6. Be careful when working around or maintaining a high-pressure hydraulic system. Wear proper eye and hand protection when searching for a high pressure hydraulic leak. Use a piece of wood or cardboard as a backstop when searching for a pin hole leak in a hose or a fitting.

7. Always relieve pressure before disconnecting or working on hydraulic system.

HYDRAULIC SAFETY

1. Always place all tractor hydraulic controls in neutral before dismounting.

2. Make sure that all components in the hydraulic system are kept in good condition and are clean.

3. Replace any worn, cut, abraded, flattened or crimped hoses and metal lines.

4. Do not attempt any makeshift repairs to the hydraulic lines, fittings or hoses by using tape, clamps or cements. The hydraulic system operates under extremely high-pressure. Such repairs will fail suddenly and create a hazardous and unsafe condition.

5. Wear proper hand and eye protection when searching for a high-pressure hydraulic leak. Use a piece of wood or cardboard as a backstop instead of hands to isolate and identify a leak.



6. If injured by a concentrated high-pressure stream of hydraulic fluid, seek medical attention immediately. Serious infection or toxic reaction can develop from hydraulic fluid piercing the skin surface.

7. Before applying pressure to the system, make sure all components are tight and that lines, hoses and couplings are not damaged.

• Think SAFETY! Work SAFELY

TORQUE SPECIFICATIONS

CHECKING BOLT TORQUE

The tables shown below give correct torque values for various bolts and capscrews. Tighten all bolts to the torques specified in chart unless otherwise noted. Check tightness of bolts periodically, using bolt torque chart as a guide. Replace hardware with the same strength *(Grade/Class)* bolt.

IMPERIAL TORQUE SPECIFICATIONS

(based on "Zinc Plated" values)



Size	Grade 5	Grade 8
	lb.ft (*N.m*)	lb.ft (*N.m*)
1/4"	**7 (*10*)**	**10 (*14*)**
5/16"	15 (*20*)	20 (*28*)
3/8"	**25 (*35*)**	**35 (*50*)**
7/16"	40 (*55*)	60 (*80*)
1/2"	**65 (*90*)**	**90 (*120*)**
9/16"	90 (*125*)	130 (*175*)
5/8"	**130 (*175*)**	**180 (*245*)**
3/4"	230 (*310*)	320 (*435*)
7/8"	**365 (*495*)**	**515 (*700*)**
1"	550 (*745*)	770 (*1050*)
1-1/8"	**675 (*915*)**	**1095 (*1485*)**
1-1/4"	950 (*1290*)	1545 (*2095*)
1-3/8"	**1250 (*1695*)**	**2025 (*2745*)**
1-1/2"	1650 (*2245*)	2690 (*3645*)

METRIC TORQUE SPECIFICATIONS

(based on "Zinc Plated" values)



Size	Class 8.8	Class 10.9
	lb.ft (*N.m*)	lb.ft (*N.m*)
M6	**7 (*10*)**	**10 (*14*)**
M8	16 (*22*)	23 (*31*)
M10	**30 (*42*)**	**45 (*60*)**
M12	55 (*75*)	80 (*108*)
M14	**90 (*120*)**	**125 (*170*)**
M16	135 (*185*)	195 (*265*)
M18	**190 (*255*)**	**270 (*365*)**
M20	265 (*360*)	380 (*515*)
M22	**365 (*495*)**	**520 (*705*)**
M24	460 (*625*)	660 (*895*)
M27	**675 (*915*)**	**970 (*1315*)**
M30	915 (*1240*)	1310 (*1780*)
M33	**1250 (*1695*)**	**1785 (*2420*)**
M36	1600 (*2175*)	2290 (*3110*)

HYDRAULIC FITTING TORQUE

Hydraulic Fitting Torque*

Size	lb.ft (N.m)
1/2	34 (46)
3/4	75 (100)
7/8	90 (122)

* The torque values shown are based on lubricated connections as in reassembly.

Tightening Flare Type Tube Fittings

1. Check flare and flare seat for defects that might cause leakage.
2. Align tube with fitting before tightening.
3. Lubricate connection and hand tighten swivel nut until snug.
4. To prevent twisting the tube(s), use two wrenches. Place one wrench on the connector body and with the second tighten the swivel nut to the torque shown.

STORAGE

The landroller should be carefully prepared for storage to ensure that all dirt, mud, debris and moisture has been removed.

Follow this procedure when preparing to store:

1. Wash the entire machine thoroughly using a water hose or pressure washer to remove all dirt, mud, debris or residue.
2. Inspect all parts to see if anything has become entangled in them. Remove the entangled material.
3. Lubricate all grease fittings to remove moisture.
4. Inspect all hydraulic hoses, fittings, lines and couplers. Tighten any loose fittings. Replace any hose that is badly cut, nicked or abraded or is separating from the crimped end of the fitting.
5. Touch up all paint nicks and scratches to prevent rusting.
6. Oil the exposed rams on the hydraulic cylinder to prevent rusting.
7. Select an area that is dry, level and free of debris.

SERVICE

GREASING

Grease: Use an SAE multipurpose grease with extreme pressure (EP) performance. Also acceptable is an SAE multipurpose lithium.

1. Use only a hand-held grease gun for all greasing.
2. Wipe grease fitting with a clean cloth before greasing, to avoid injecting dirt.
3. Replace and repair broken fittings immediately.
4. If fittings will not take grease, remove and clean thoroughly. Also clean lubricant passageway. Replace fitting if necessary.
5. Inject grease until you see grease being expelled from the bearing or bushing areas.

TIRE SAFETY

1. Failure to follow proper procedures when mounting a tire on a wheel or rim can produce a blow out which may result in serious injury or death.
2. Do not attempt to mount a tire unless you have the proper equipment and experience to do the job.
3. Have a qualified tire dealer or repair serviceman perform required tire maintenance.

MAINTENANCE CHECKLIST

Use the Maintenance Checklist provided for regular service intervals and keep a record of all scheduled maintenance:

Maintenance Check - 10 Hours

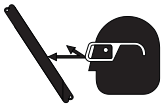

- Hydraulic fluid leaks
- Damaged hoses
- Check tire pressure:

12.5L x15 - 12 PLY: ***90 PSI (620 kPa)***

Previous: 8 PLY - ***32 PSI (220 kPa)***



Grease Points - 25 Hours

- Lube points indicated
- Cast Bearings (not roller end bearings)
- Cylinder Pins
- Joint Pins



Grease Points - 50 Hours

- Hubs & Spindles
- Working points & pins
- Safety signs clean

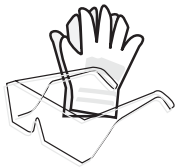

Annually

- Bolt tightness
- Wheel bearings
- Plastic wear pad under ramp plate.

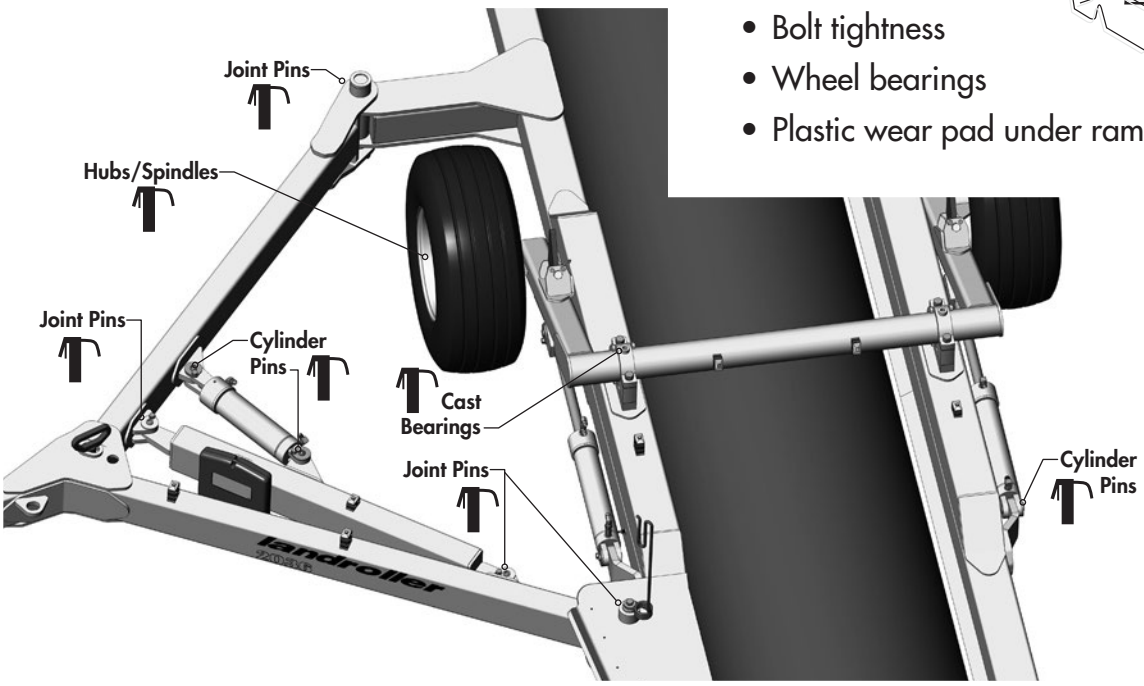

HYDRAULIC CYLINDER REPAIR

PREPARATION

When cylinder repair is required, clean off unit, disconnect hoses and plug ports before removing cylinder.

When removed, open the cylinder ports and drain the cylinder's hydraulic fluid.

Examine the type of cylinder. Make sure you have the correct tools for the job.

You may require the following tools:

- *Proper **Seal Kit***
- *Rubber Mallet*
- *Screwdriver*
- *Punch*
- *Pliers*
- *Emery cloth*
- *Torque Wrench*

Types of Cylinders
(Wire Ring / Threaded Head)

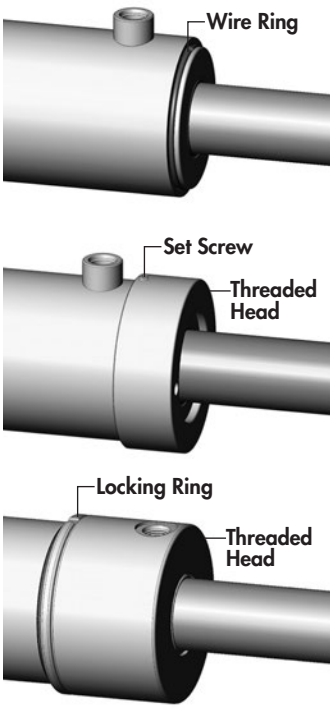

REPAIRING A WIRE RING CYLINDER

1. Retract the rod assembly.
2. Remove the external steel wire ring.

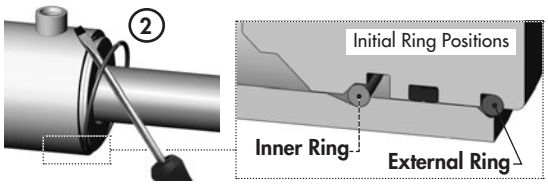

3. Remove any dirt that may have accumulated on the cylinder head.
4. Using the mallet and punch, push the head into the cylinder tube until the internal tube groove is fully exposed. This will also move the internal wire ring into its removal position.

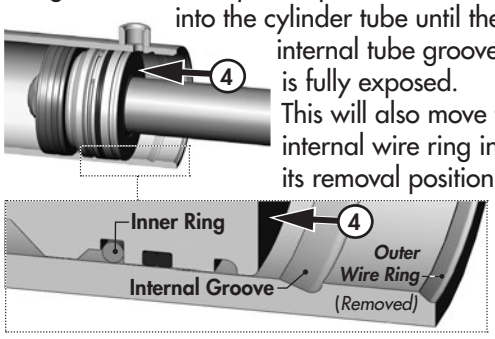

5. Take the plastic removal ring from the seal kit:
   a) Straighten the ring and remove any kinks or excessive curl to make installation easier and prevent it from falling out.
   b) Insert the removal ring into the internal groove with the feathered end pointing into the tube.

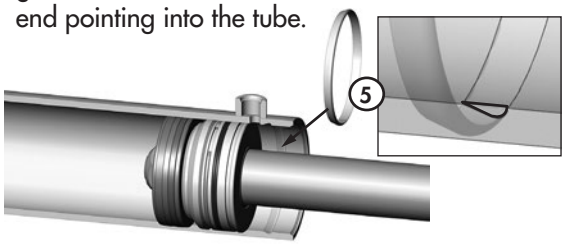

   c) Use a screwdriver or a finger to hold one end of the ring in the groove while fitting the other end of the ring into the groove. The tips should snap in together. Ensure it is secure and fully seated before the next step.

   IMPORTANT: It is important to e*nsure the removal ring is completely in the groove before pulling the rod out. If the ring sticks out it will get stuck between the head and tube.*

6. a) Extend the rod to pull head out of tube. If the rod does not pull out easily, push the head back in and ensure the ring is properly in the groove. Replace ring if necessary.

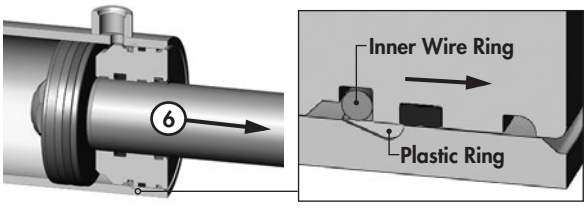

   Note: *Excessive force will not overcome a jammed ring and could damage the cylinder.*

   b) Completely remove rod and head from tube.

7. Remove plastic removal ring from the cylinder tube.

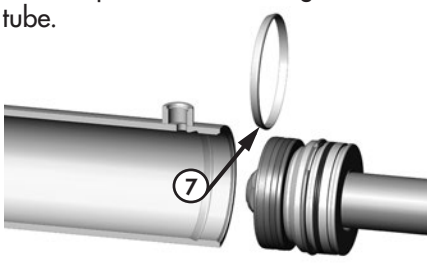

8. Remove locknut, piston and head from rod.

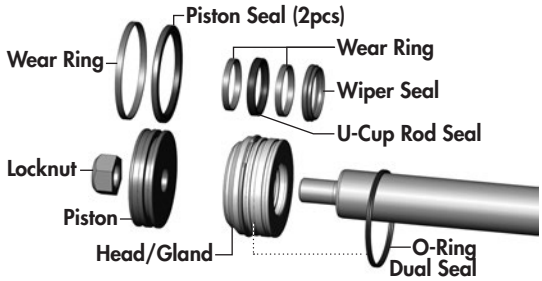

9. a) Inspect and replace all of the seals with new components.

   b) Inspect the inside of the cylinder barrel, piston, rod and other polished parts for burrs and scratches. Smooth areas as needed with an emery cloth.

   c) During re-assembly of head/gland assembly, leave the outer O-Ring Dual Seal loose on the rod to re-install at a later step.

10. Replace piston and torque the locknut to required value. (Refer to chart below)

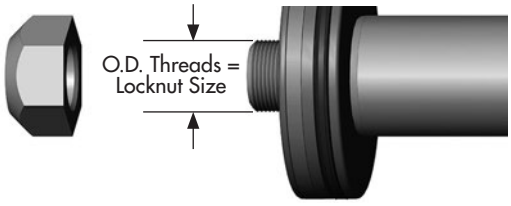

LOCKNUT SIZE (PISTON)	TORQUE VALUE
3/8 - 24 UNF	25-30 lb.ft (35-42 *N.m*)
1/2 - 20 UNF	**40-60 lb.ft *(55-80 N.m)***
5/8 - 18 UNF	95-105 lb.ft (130-140 *N.m*)
3/4 - 16 UNF	**175-225 lb.ft *(240-305 N.m)***
7/8 - 14 UNF	200-275 lb.ft (270-370 *N.m*)
1 - 14 UNF	**300-380 lb.ft *(405-515 N.m)***
1 1/8 - 12 UNF	400-500 lb.ft (540-675 *N.m*)
1 1/4 - 12 UNF	**500-600 lb.ft *(675-810 N.m)***
1 1/2 - 12 UNF	700-800 lb.ft (950-1085 *N.m*)
1 3/4 - 12 UNF	**800-900 lb.ft *(1085-1220 N.m)***

11. a) Install the supplied band clamp to compress the inner wire ring on the head/gland assembly so it will fit into the tube.

    Note: Make sure the cam of the band clamp is not overtop of the gap in the ring.

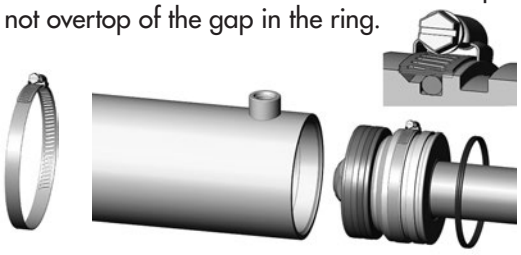

11. b) Tighten the band clamp to ensure the wire ring is fully seated. Then, loosen the clamp approx. 1/2 a turn to allow band clamp to slide during final assembly.

12. Lubricate the cylinder tube and piston seals.

13. Insert the piston into the tube. Tap the cylinder head into the tube until the clamp slides over and the inner wire ring is inside the tube.

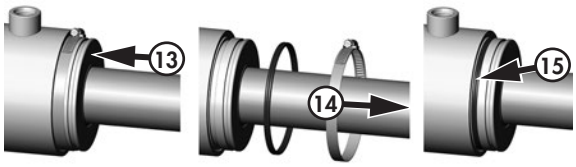

14. Loosen the clamp and remove.

15. Install the O-Ring Dual seal.

16. Tap the head the rest of the way until the end is flush with the tube.



IMPORTANT: The head/gland must be inserted until it is flush with the tube to allow the inner wire ring to snap into its seated position in the internal cylinder groove. Failure to insert the head flush as shown will result in the head and rod assembly coming out of the tube when pressure is applied to the cylinder.

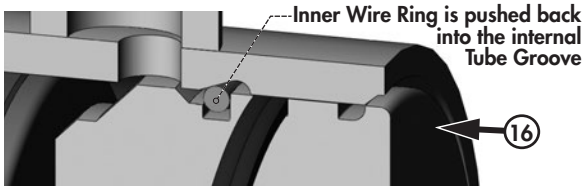

17. Pull the rod out to expose the external wire ring groove in cylinder head, and then install the external ring.

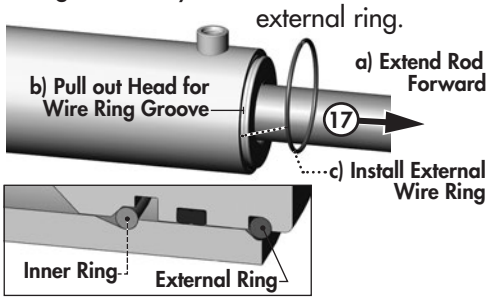

18. Before using the cylinder, ensure that you double check your work.

REPAIRING A THREADED HEAD CYLINDER

Set Screw Style

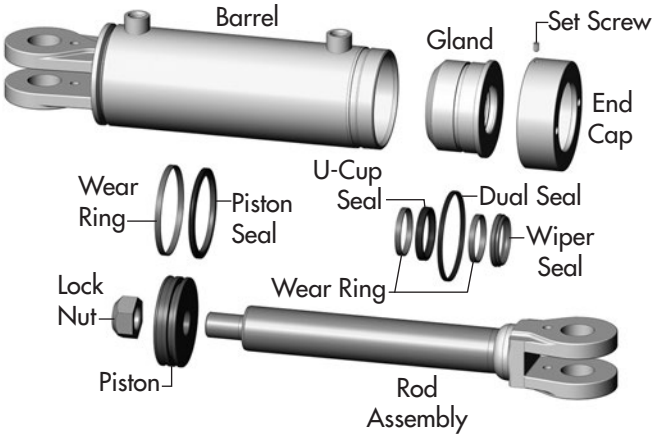

DISASSEMBLY

1. Loosen Set Screw and turn off end cap.
2. Carefully remove piston/rod/gland assemblies.
3. Disassemble the piston from the rod assembly by removing lock nut.

NOTE: *DO NOT* clamp rod by chrome surface.

4. Slide off gland assembly & end cap.
5. Remove seals and inspect all parts for damage.
6. Install new seals and replace damaged parts with new components.
7. Inspect the inside of the cylinder barrel, piston, rod and other polished parts for burrs and scratches. Smooth areas as needed with an emery cloth.

REASSEMBLY

1. Reinstall rod through end cap & gland assembly.
2. Secure piston to rod with lock nut. Torque lock nut to proper value (refer to chart on previous page for proper torque value).
3. Lube inside of barrel, piston seals, and gland seals with hydraulic oil.
4. With cylinder body held gently in a vise, insert piston, gland, end cap and rod combination using a slight rocking motion.
5. Apply Loctite anti-seize before installing cylinder end cap.
6. Torque cylinder end cap to 440 lb.ft (600 N.m).
7. Tighten Set Screw on end cap to 6 lb.ft (8 N.m).

REPAIRING A THREADED HEAD CYLINDER

Locking Ring Style

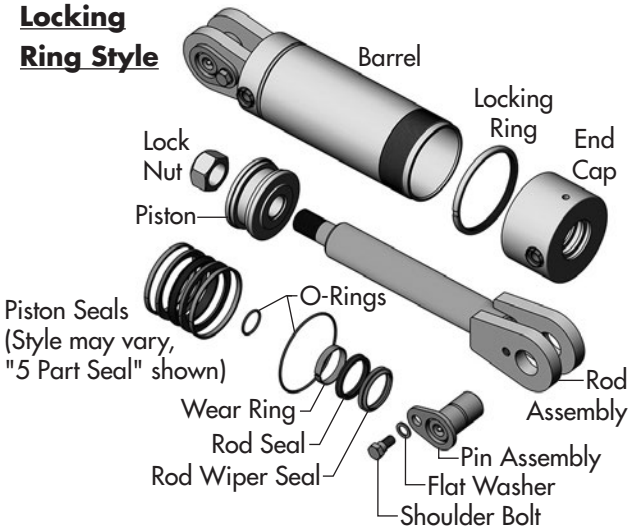

DISASSEMBLY

1. Loosen Locking Ring and turn off end cap.
2. Carefully remove piston, rod and end cap.
3. Disassemble the piston from the rod assembly by removing lock nut.

NOTE: *DO NOT* clamp rod by chrome surface.

4. Slide off end cap.
5. Remove seals and inspect all parts for damage.
6. Install new seals and replace damaged parts with new components.
7. Inspect the inside of the cylinder barrel, piston, rod and other polished parts for burrs and scratches. Smooth areas as needed with an emery cloth.

REASSEMBLY

1. Reinstall rod through end cap.
2. Secure piston to rod with lock nut. Torque lock nut to proper value (refer to chart on previous page for proper torque value).
3. Thread lock ring fully onto barrel.
4. Lube inside of barrel and piston seals with hydraulic oil.
5. With cylinder body held gently in a vise, insert piston, end cap and rod combination using a slight rocking motion.
6. Turn end cap fully against lock ring then back off end cap to align ports.
7. Tighten Locking Ring against end cap using a punch and hammer.

WHEEL HUB REPAIR

COMMON HUB & SPINDLE COMPONENTS

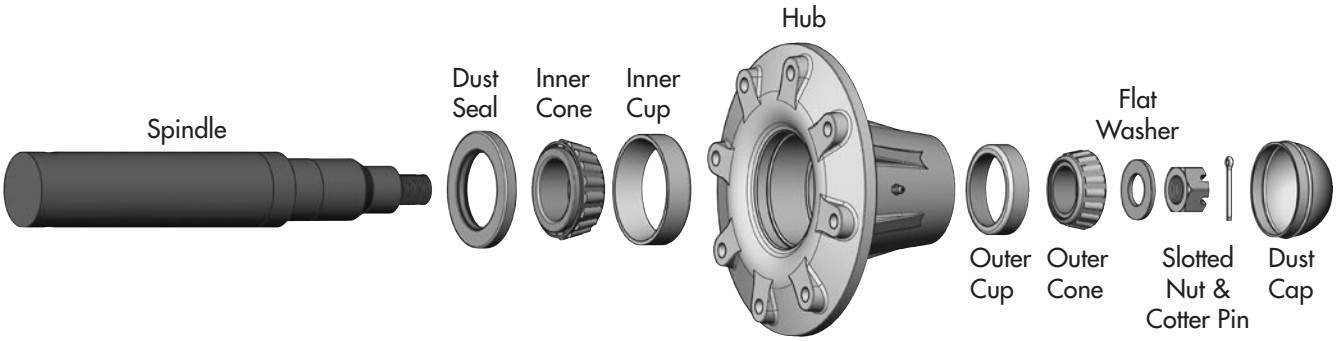

⚠ **IMPORTANT:** *Be sure to block up unit securely before removing tires.*

DISASSEMBLY

1. Remove dust cap.
2. Remove cotter pin from nut.
3. Remove nut and washer.
4. Pull hub off spindle.
5. Dislodge the inner cone bearing and dust seal.
6. Inspect cups that are press fitted into hub for pits or corrosion and remove if necessary.
7. Inspect and replace defective parts with new ones.

ASSEMBLY

1. If cups need replacing, be careful to install them gently and evenly into hub until they are fully seated.
2. Apply a thick wall of grease inside hub. Pack grease in cones.
3. Install inner cone and dust seal as illustrated.
4. Position hub onto spindle and fill surrounding cavity with grease.
5. Assemble outer cone, washer and nut.
6. Tighten nut while rotating hub until there is a slight drag.
7. Turn nut back approximately 1/2 turn to align cotter pin hole with notches on nut.
8. Install cotter pin and bend legs sideways over nut.
9. Fill dust cap half full of grease and gently tap into position.
10. Pump grease into hub through grease fitting until lubricant can be seen from dust seal.

Overview & Decal Locations

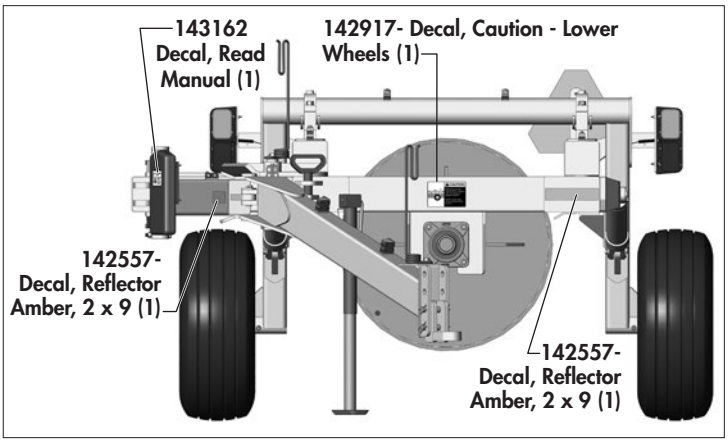

Safety Decals

Keep safety decals and signs clean and legible at all times. Replace safety decals and signs that are missing or have become illegible. Safety decals or signs are available from your Dealer.

142008 - Decal, Degelman (1)
142383 - Decal, Caution, 1-6 Point Safety (1)
142422 - Decal, Danger - Stay Clear Crush (1)
142557 - Decal, Reflector Amber - 2 x 9 (4)
142556 - Decal, Reflector Red - 2 x 9 (3)
142650 - Decal, Reflector Fluorescent - 2 x 9 (3)
142914 - Decal, Landroller 2036 (2)
142915 - Decal, Transport Bar (1)
142916 - Decal, Pin Placement (1)
142917 - Decal, Caution Lower Wheels (2)
143162 - Decal, Read Manual (1)

Exploded Component Overview

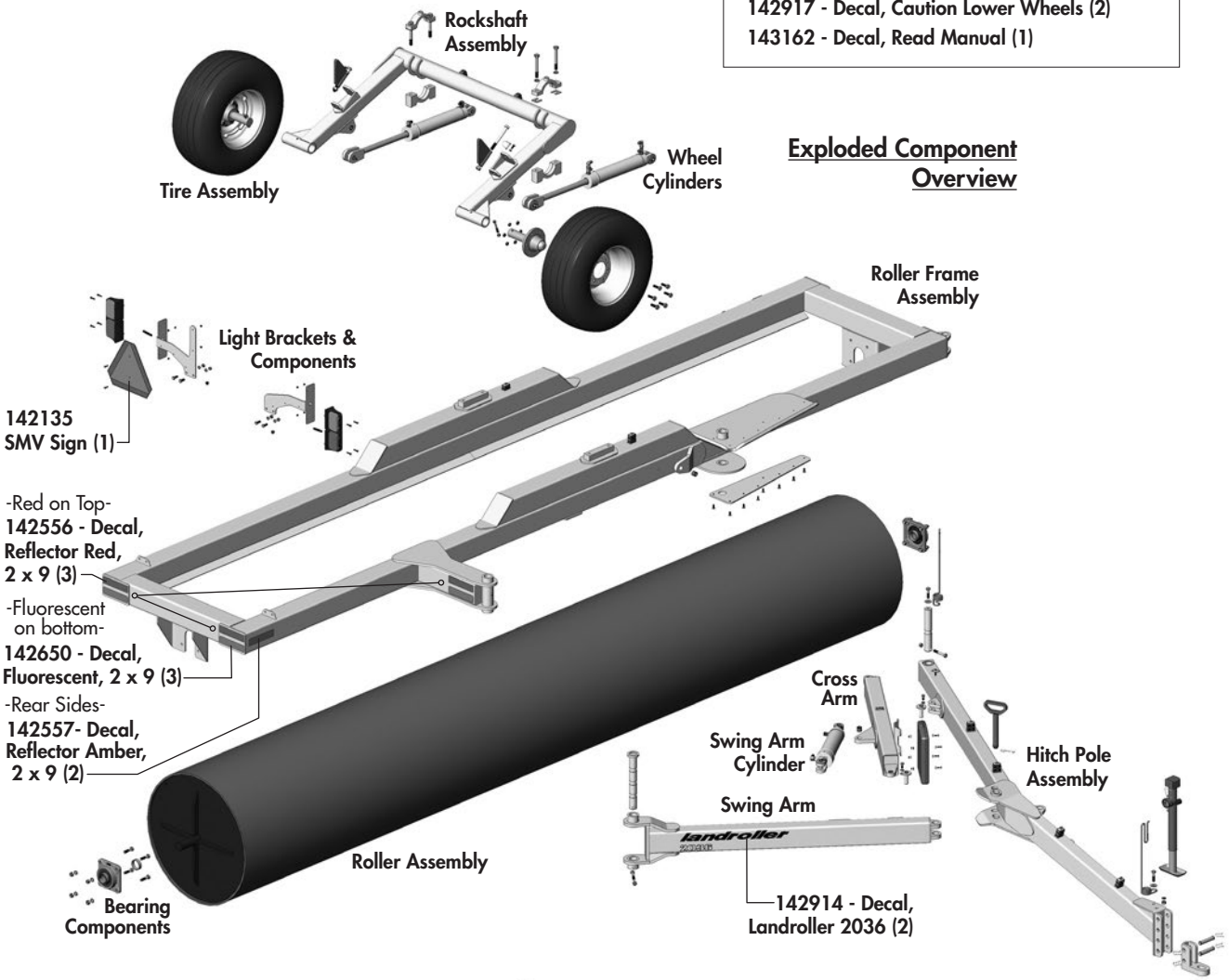

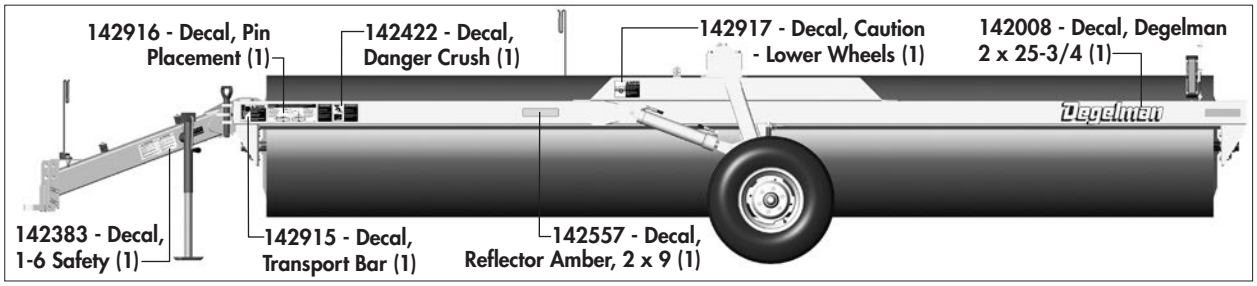

Roller Frame Components

Roller & Frame Components

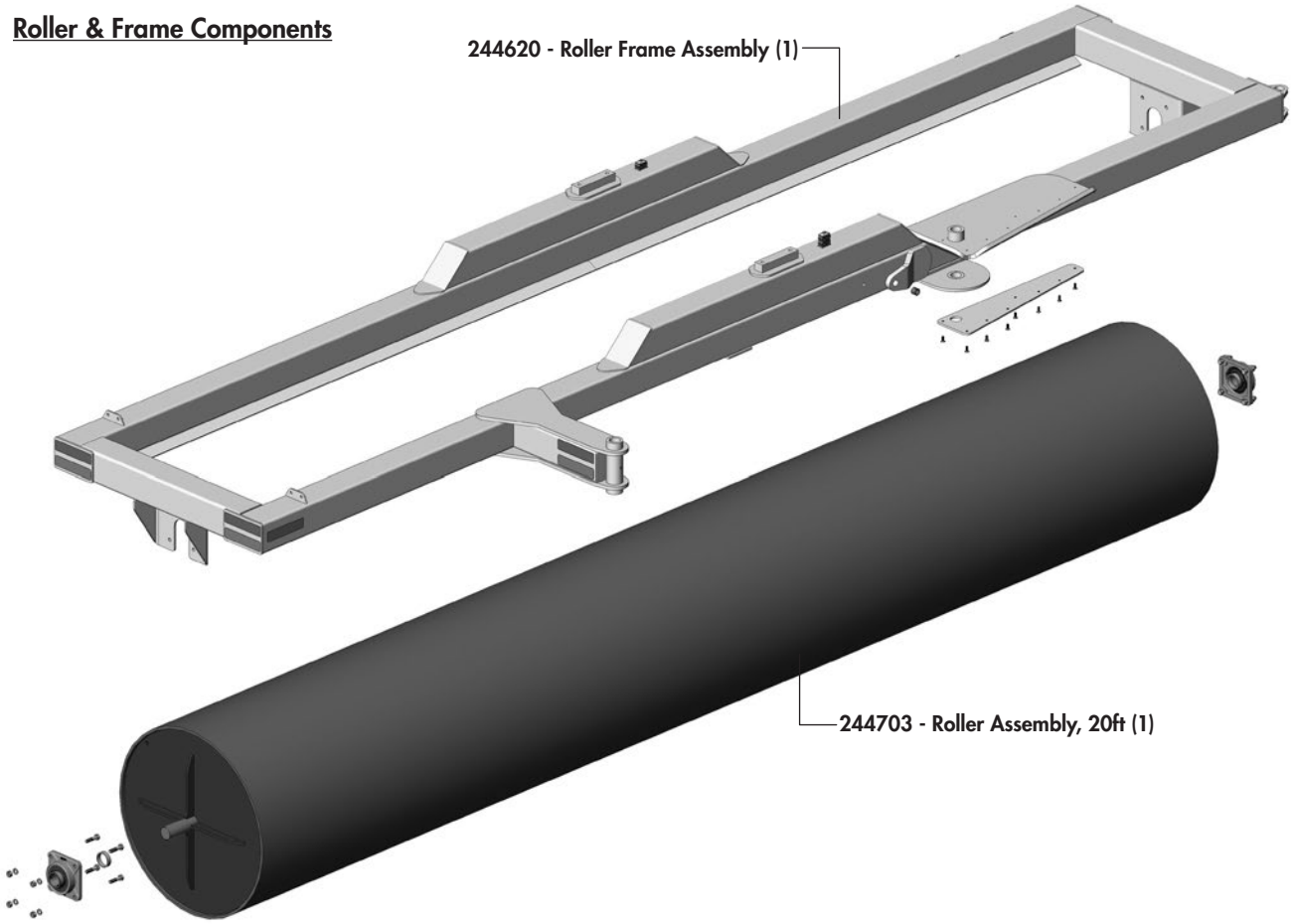

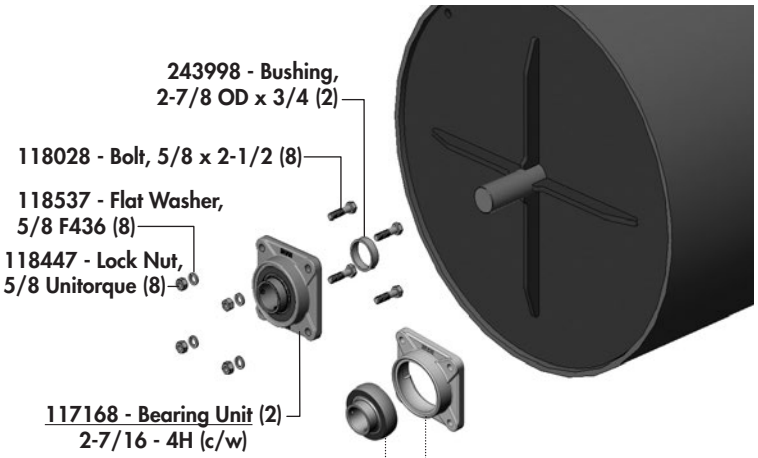

IMPORTANT: Setscrew MAX Torque is **21 lb·ft (29 N·m)**. Do not over-torque.

Wear Pad Detail

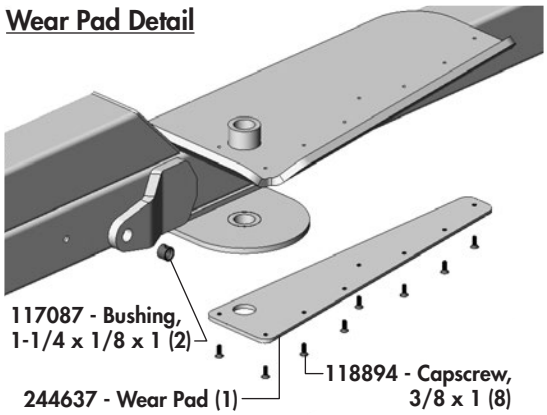

Models prior to S/N - LR5993 used the following:

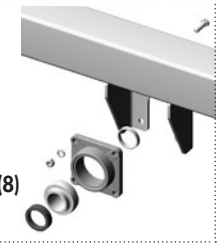

117006 - Bearing Unit (2)
(c/w)
- *117107 - Cast Housing (1)*
- *117106 - Bearing Insert (1)*
- *117022 - Lock Ring (1)*

Mounted with:
- 243604 - Bushing, Roller (2)
- 118026 - Bolt, 5/8 x 2 (8)
- 118508 - Lock Washer, 5/8 (8)
- 118407 - Nut, 5/8 (8)

Hitch Pole & Swing Arm Components

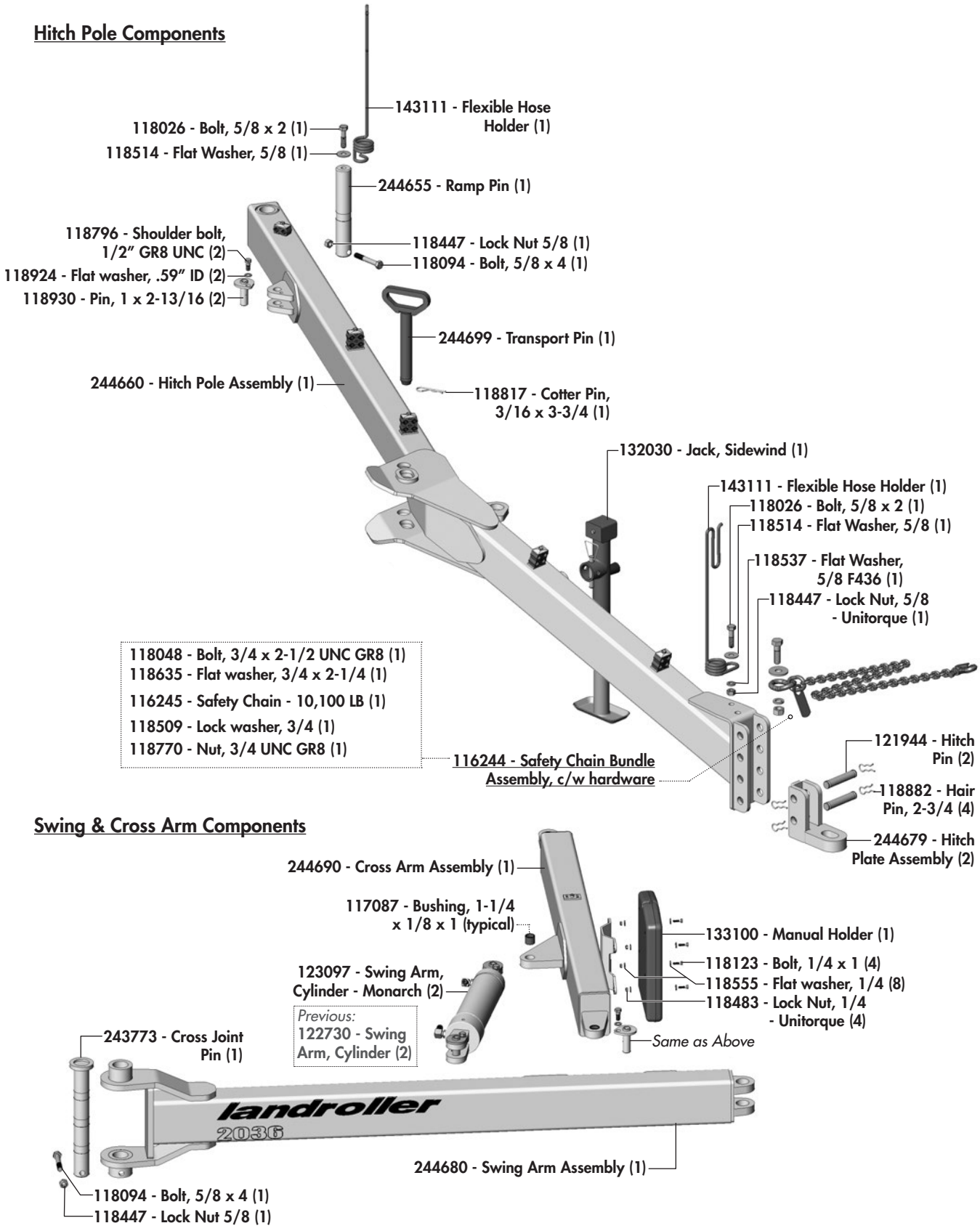

Rockshaft, Wheel, & Light Components

Rockshaft & Wheel & Components

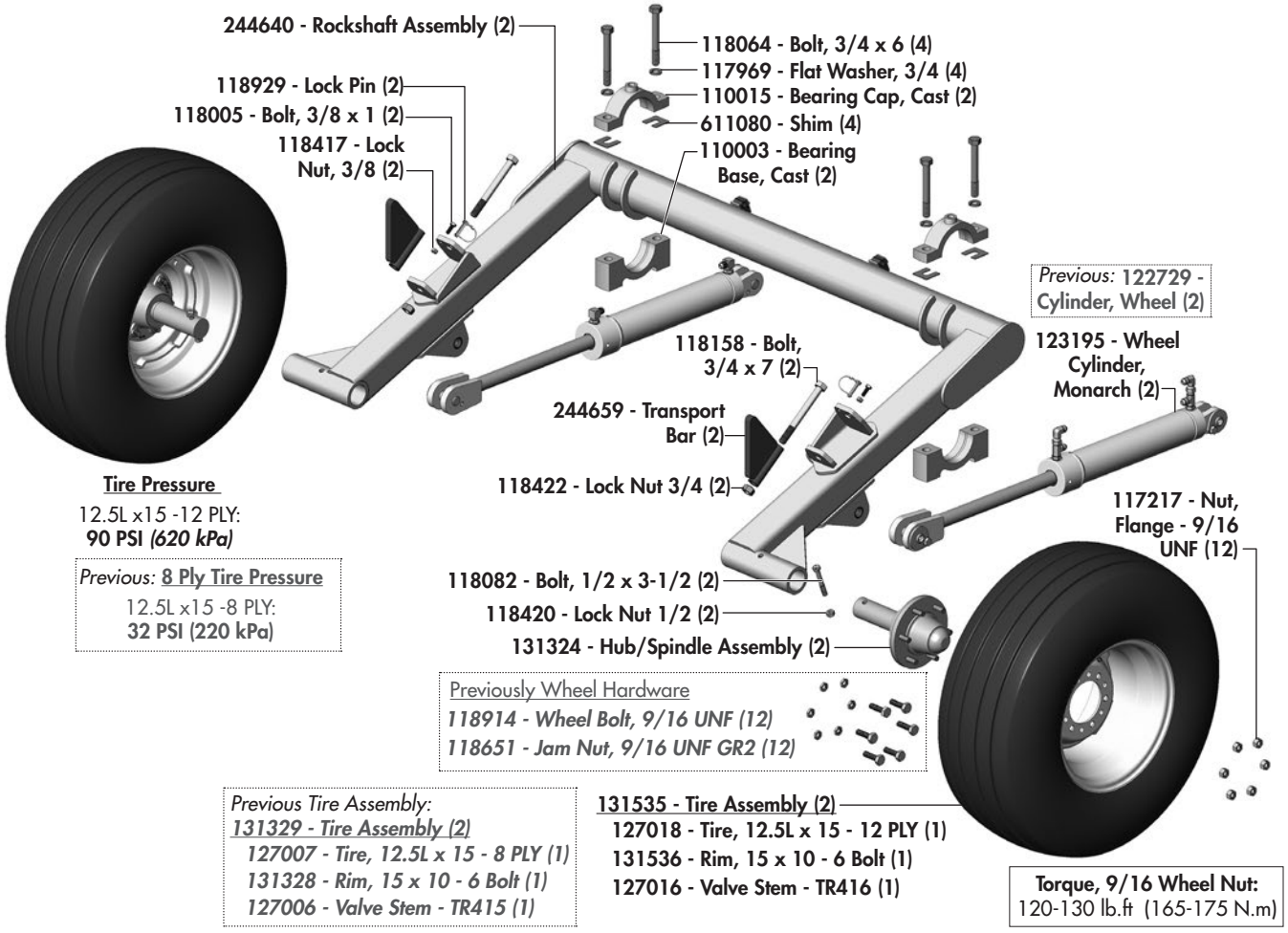

Light Brackets & Components

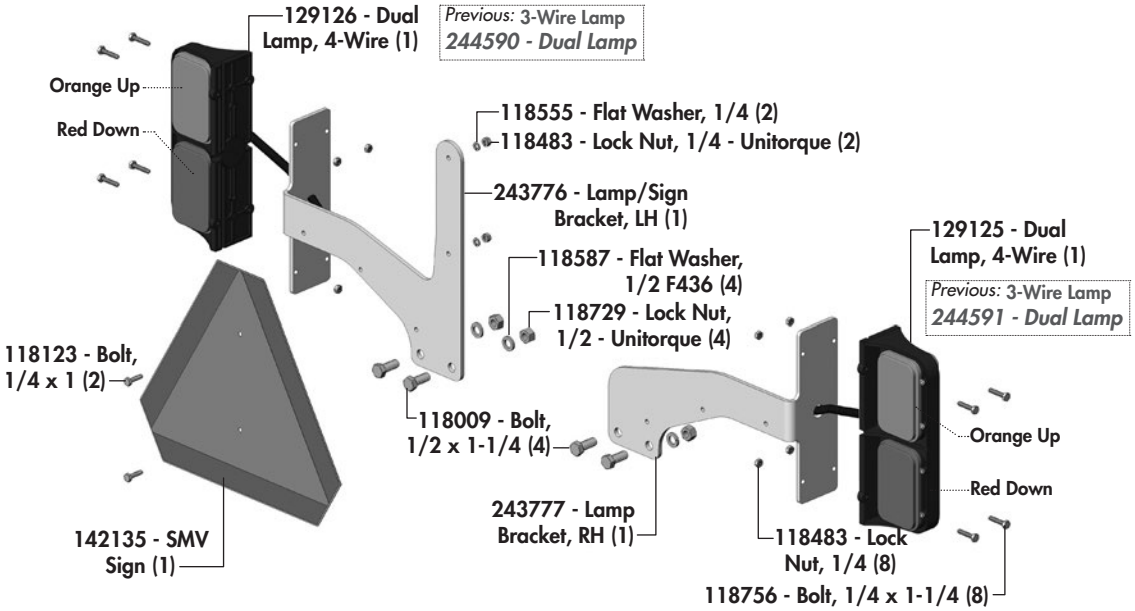

Hub & Spindle, Cylinder Components

Hub & Spindle Components

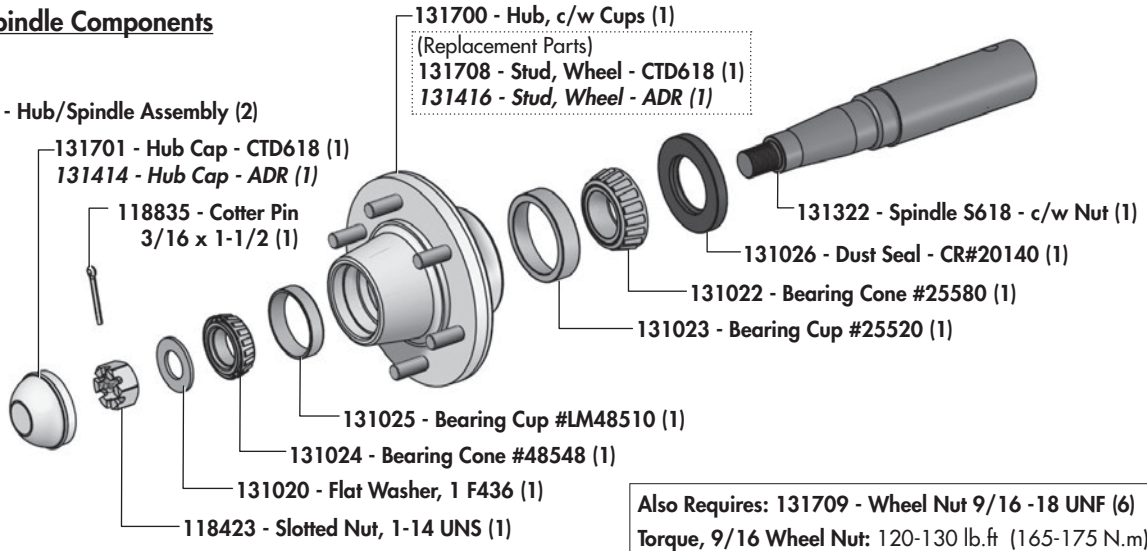

Also Requires: 131709 - Wheel Nut 9/16 -18 UNF (6)
Torque, 9/16 Wheel Nut: 120-130 lb.ft (165-175 N.m)

Wheel Cylinders

123195 - Cylinder, Monarch - 3 x 16 x 1-1/2 (2)

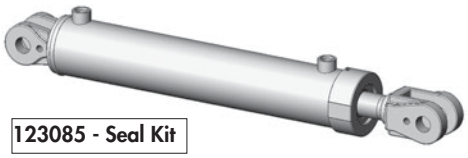

123085 - Seal Kit



Requires:
118930 - Pin, 1 x 2-13/16 (2)
118924 - Flat Washer, .59 ID x .9 OD (2)
118796 - Shoulder Bolt, 1/2 GR8 UNC (2)

Previous: **122729 - Cylinder, 3 x 16 x 1-1/2**

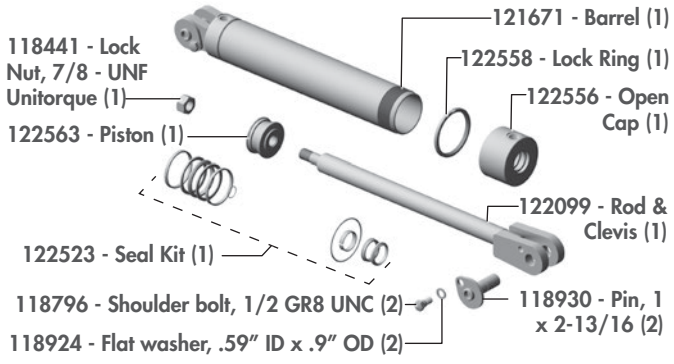

Swing Arm Cylinder

123097 - Cylinder, 3-1/2 x 12 x 1-1/2 (1)

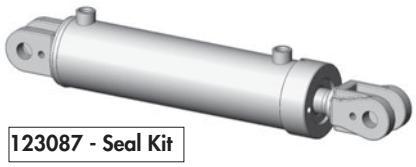

123087 - Seal Kit



Requires:
118930 - Pin, 1 x 2-13/16 (2)
118924 - Flat Washer, .59 ID x .9 OD (2)
118796 - Shoulder Bolt, 1/2 GR8 UNC (2)

Previous: **122730 - Cylinder, 3-1/2 x 12 x 1-1/2**

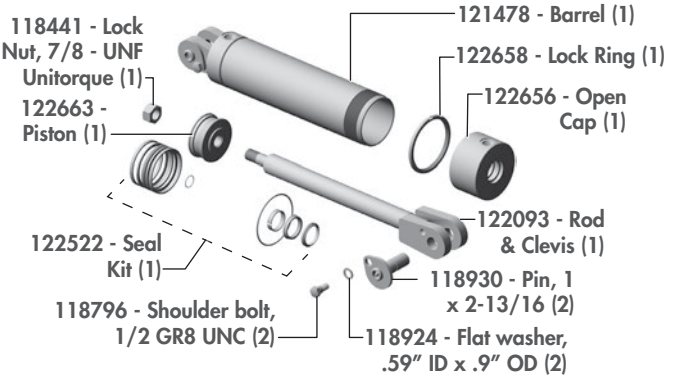

Hydraulic Routing

Hydraulic Routing & Components

Wheel Lift Cylinders

122729 - Cylinder, 3 x 16 x 1-1/2 (2)

Swing Arm Cylinder

122730 - Cylinder, 3-1/2 x 12 x 1-1/2 (1)

Hydraulic Hoses

(106) 126516 - Hose, 3/8 x 106 (2)

(249) 126506 - Hose, 3/8 x 249 (2)

(288) 126620 - Hose, 3/8 x 288 (2)

Hydraulic Fittings

1 141581 - Quick Coupler-m, 3/4 ORB (4)

2 141515 - Connector, 3/4 JIC-m x ORB (4)

3 141609 - Orifice Adaptor, 3/4 JIC-f x JIC-m (1)

4 141504 - 90° Elbow, 3/4 JIC-m x ORB (4)

5 141518 - 90° Elbow, 3/4 JIC-m x JIC-f (2)

6 141527 - Tee 3/4 JIC-m x JIC-m x ORB (2)

Hydraulic Fasteners

Hose Clamp

Stacked Hose Clamps

Flexible Hose Holder

Hydraulic Hose Clamps

118317 - Bolt, 5/16 x 1-3/8

780279 - Top Plate

780346 - Hose Clamp - 2 Halves

118105 - Bolt, 5/16 x 2-1/2

780279 - Top Plate

780346 - Hose Clamp - 2 Halves

780346 - Hose Clamp - 2 Halves

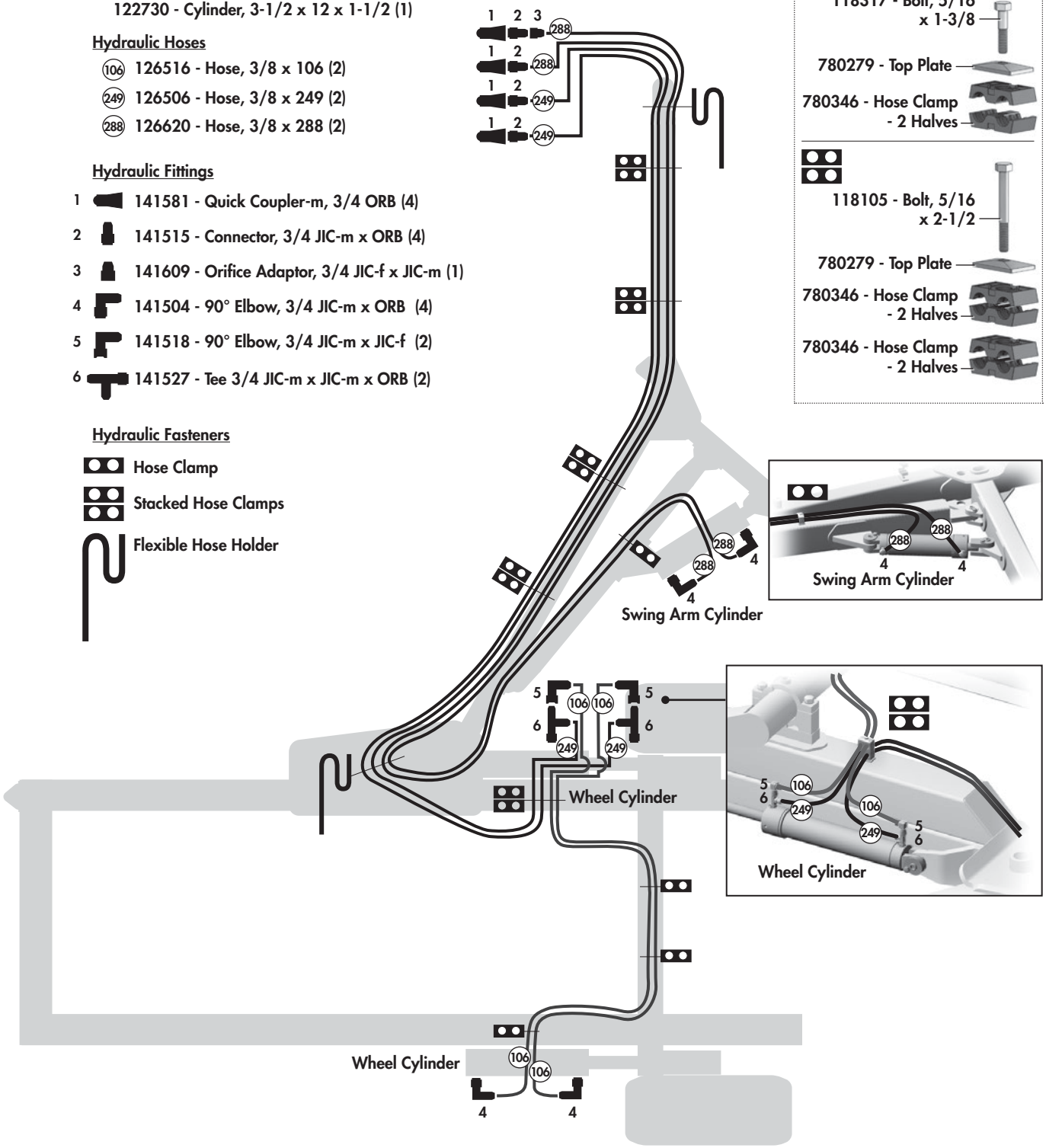

Electrical Routing

Electrical Routing & Components - 4-Wire
(with brake function)

Wire Harness - w/plugs (1)
244614 - Wire Harness, 4-Wire

7 POLE PLUG

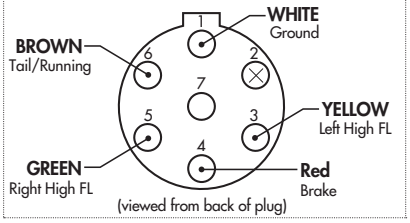

Previous: **3-Wire Components** (w/o brake function)

Wire Harness - w/plugs (1)
244597 - Wire Harness, 3-Wire

244591 - Dual Lamp, 3-Wire RH (1)
244590 - Dual Lamp, 3-Wire LH (1)

Plug Socket Reference - 3-Wire
BROWN Socket Plug (Tail Lamps)
WHITE Socket Plug (Ground)
GREEN Socket Plug (Right Turn)
YELLOW Socket Plug (Left Turn)

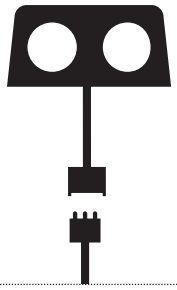

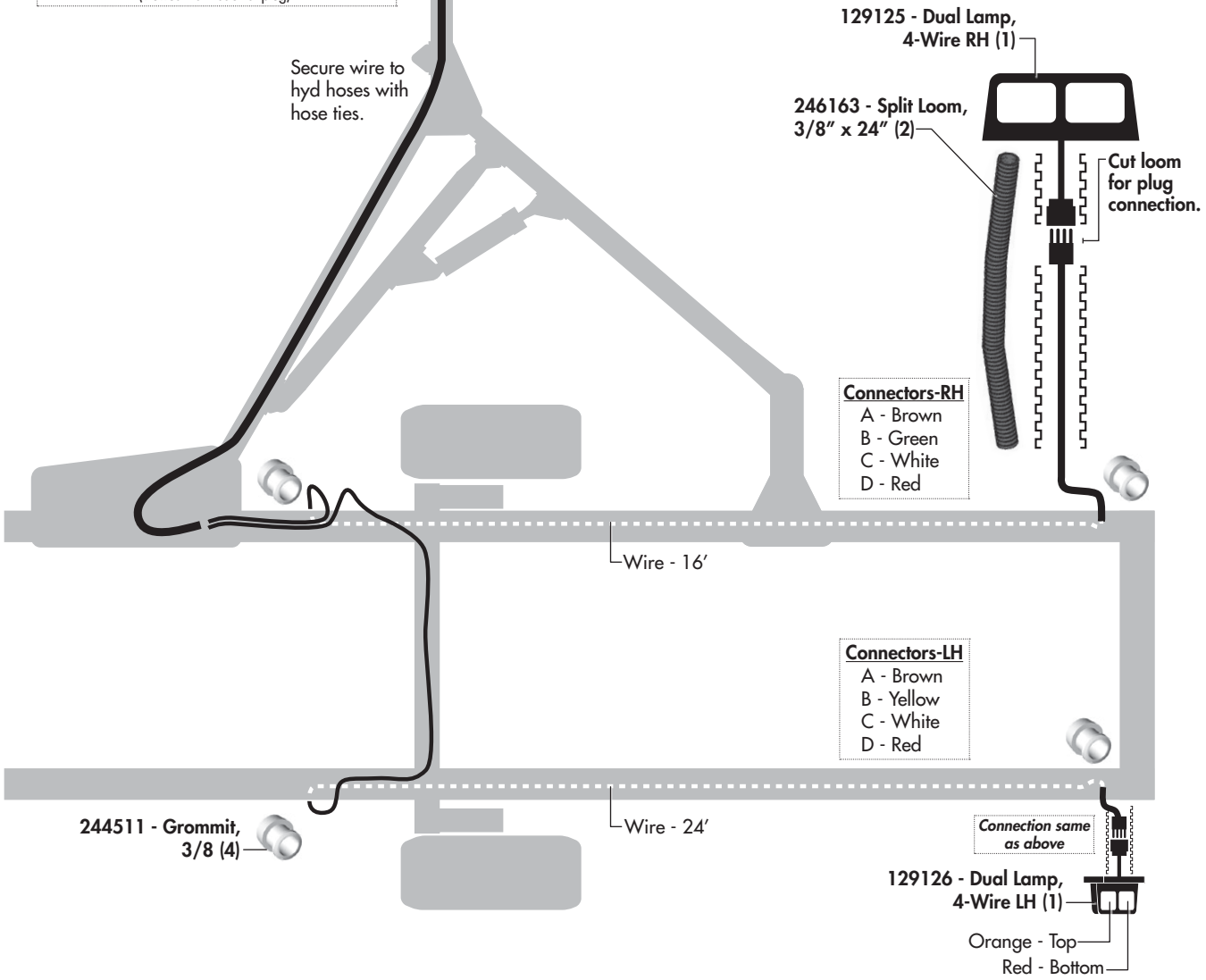

Electrical Routing *(Previous)*

Previous: Electrical Routing & Components - Spliced Wiring

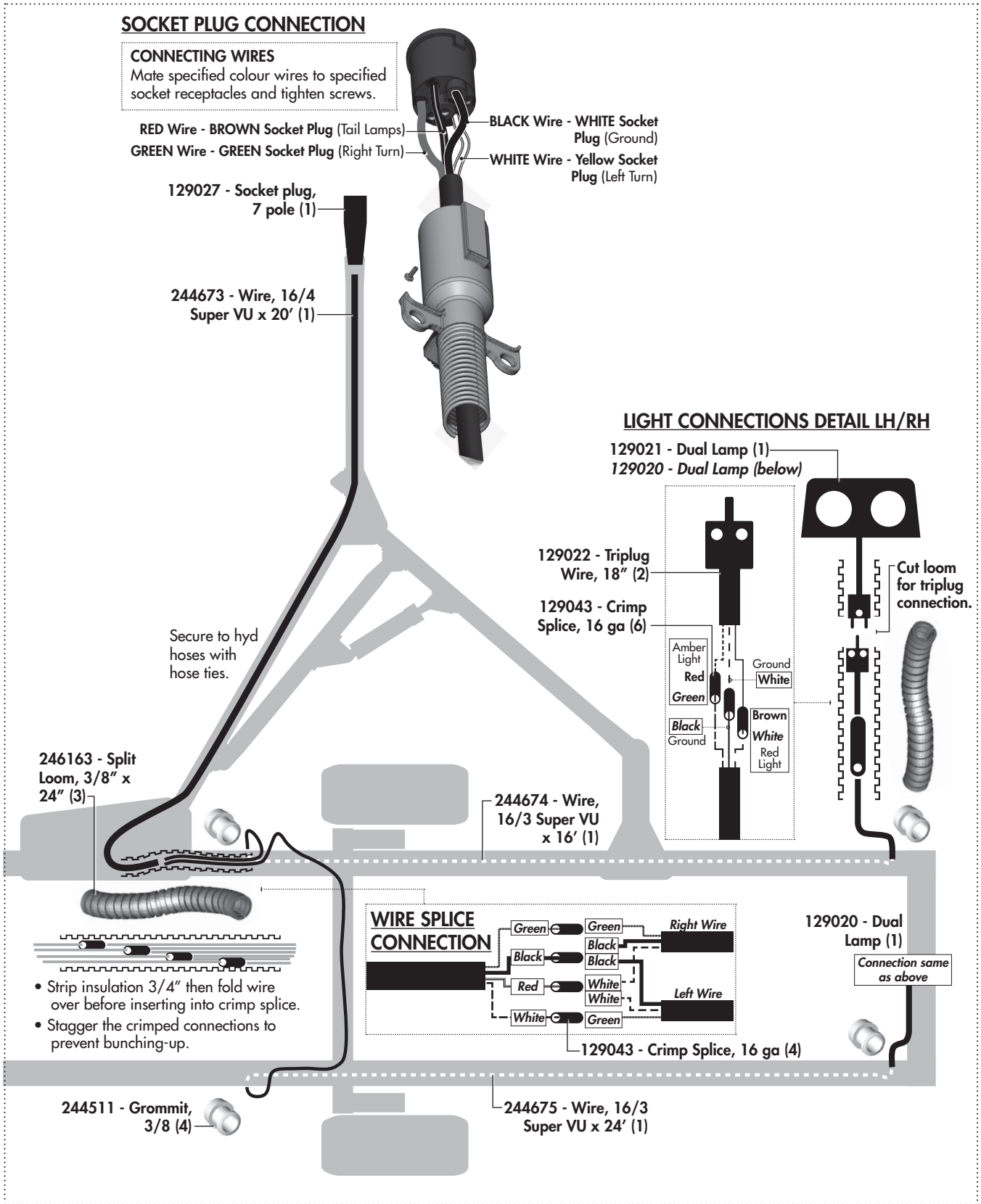

Warranty

Retail Customer's Responsibility Under Degelman Warranty.

It is the retail customer and/or Operator's responsibility to read the Operator's Manual, to operate, lubricate, maintain and store the equipment in accordance with all instructions and safety procedures. Failure of the operator to read the operators manual is a misuse of this equipment.

It is the retail customer and/or operators responsibility to inspect the product and to have any part(s) repaired or replaced when continued operation would cause damage or excessive wear to other parts or cause safety hazard.

It is the retail customer's responsibility to deliver the product to the authorized Degelman dealer, from whom he purchased it, for service or replacement of defective parts, which are covered by warranty. Repairs to be submitted for warranty consideration must be made within forty-five days of failure.

It is the Retail Customer's responsibility for any cost incurred by the dealer for hauling of the product for the purpose of performing a warranty obligation or inspection.

WARRANTY INFORMATION

Make certain the warranty registration card has been forwarded to:

Degelman Industries LP
Box 830 -272 Industrial Dr.
Regina, SK, Canada
S4P 3B1

Always give your dealer the serial number of your Degelman product when ordering parts or requesting service or other information.

The serial number is located on the machine as shown in the diagram below. In the space provided record the model number, the serial number and the date of purchase to assist your dealer in providing you with prompt and efficient service.

SERIAL NUMBER: _____

MODEL NUMBER: _____

DATE OF PURCHASE: _____



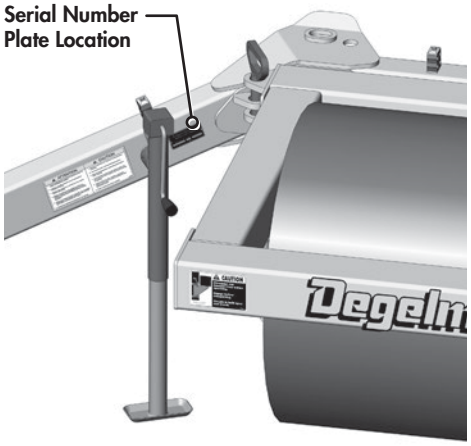

2 Year

Limited Warranty - Agricultural Products

Degelman Industries LP ("Degelman") warrants to the original purchaser of any new Degelman equipment, purchased from an authorized Degelman dealer, that the equipment will be free from defects in material and workmanship for a period of two (2) years from the date of delivery, for non-commercial use (including farm, institutional, government, and municipality) and (1) year from the date of delivery for commercial use. The obligation of Degelman to the purchaser under this warranty is limited to the repair or replacement of defective parts in the first year and to the provision, but not the installation of replacement parts in the second year. Degelman reserves the right to inspect any equipment or parts which are claimed to have been defective in material or workmanship.

This warranty limits its replacement or repair coverage to what is consistent with the warranty of Degelman's suppliers of purchased components.

Replacement or repair parts installed in the equipment covered by this limited warranty are warranted for ninety (90) days from the date of delivery of such part or the expiration of the applicable new equipment warranty period, which ever occurs later. Warranted parts shall be provided at no cost to the user at an authorized Degelman dealer during regular working hours. Warranted replacement parts will either be replaced or rebuilt at Degelman's discretion.

Disclaimer of implied warranties & consequential damages

This warranty shall not be interpreted to render Degelman Industries LP liable for injury, death, property damage or damages of any kind, whether direct, consequential, or contingent to property. Without limiting the generality of the foregoing, Degelman shall not be liable for damages resulting from any cause beyond its reasonable control, including, without limitation, loss of crops, any expense or loss of labour, supplies, rental machinery or loss of use.

No other warranty of any kind whatsoever, express or implied is made with respect to this sale; and all implied warranties of merchantability and fitness for a particular purpose which exceed the obligations set forth in this written warranty are hereby disclaimed and excluded from this sale. This exclusion shall not apply in any jurisdiction where it is not permitted by law.

This limited warranty shall not apply:

1. If, in the sole opinion of Degelman, the unit has been subjected to misapplication, abuse, misuse, negligence accident or incorrect off-site machine set-up.
2. To any goods that have sustained damage or deterioration attributable to a lack of routine maintenance (eg. Check and Re-torque of fastening hardware, Hydraulic fluid purities, drive train alignments, and clutch operation)
3. If parts not made or supplied by Degelman have been used in the connection with the unit, if, in the sole judgement of Degelman such use affects its performance, safety, stability or reliability.
4. If the unit has been altered or repaired outside of an authorized Degelman dealership in a manner which, in the sole judgement of Degelman, affects its performance, safety, stability or reliability.
5. To expendable or wear items such as (eg. Harrow tines, Rock Picker and Rock Rake wear teeth and replaceable bushings and pins.) and any other items that in the company's sole judgement are a wear item.

No employee or representative of Degelman Industries LP is authorized to change this limited warranty in any way or grant any other warranty unless such change is made in writing and signed by the Degelman Service Manager.

This limited warranty is subject to any future availability of supply, which may directly affect Degelman's ability to obtain materials or manufacture replacement parts.

Degelman reserves the right to make improvements in design or changes in specifications at any time, without incurring obligations to owners of equipment previously delivered.

This limited warranty is subject to compliance by the customer to the enclosed *Retail Customer's Responsibility Under Degelman Warranty.*

© 2026 Degelman Industries LP