Degelman

OPERATOR & PARTS MANUAL

STRAWMASTER

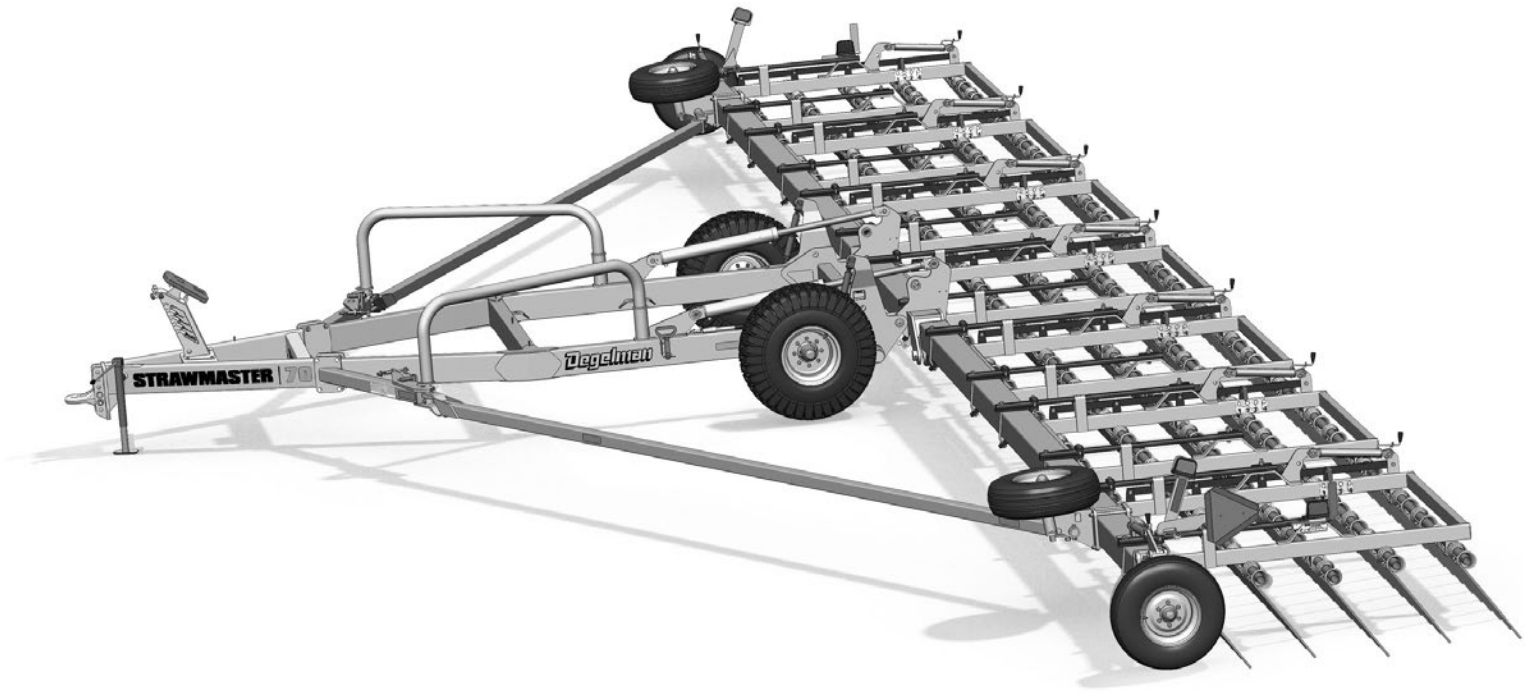

STRAWMASTER | 50 | 70 | 82

142652 v1.0

DEGELMAN INDUSTRIES LP
BOX 830-272 INDUSTRIAL DRIVE,
REGINA, SK, CANADA, S4P 3B1
FAX 306.543.2140 PH 306.543.4447
1.800.667.3545 DEGELMAN.COM

STRAWMASTER
50′, 70′ & 82′
Serial Numbers 8563 and up

QUICK-START GUIDE*
for STRAWMASTER

* Refer to operators manual for complete safety and operation info.

REMEMBER! You must complete **Product Registration** to be eligible for **Warranty.**

Degelman

A Connect Hydraulics

❶ **AUTO-FOLD LIFT CIRCUIT...Harrow Lift Cylinders**

❷ **HYDRAULIC LIFT CIRCUIT.....(Optional)**

❸ **REPHASING TINE ANGLE CIRCUIT....(Optional)**

Note: These hydraulic options are not included on all models. Manual adjustment will be required if they are not installed.

B Backing Into Field Position

Note: Ensure there is plenty of room behind and to the sides of the Strawmaster before backing into field position.

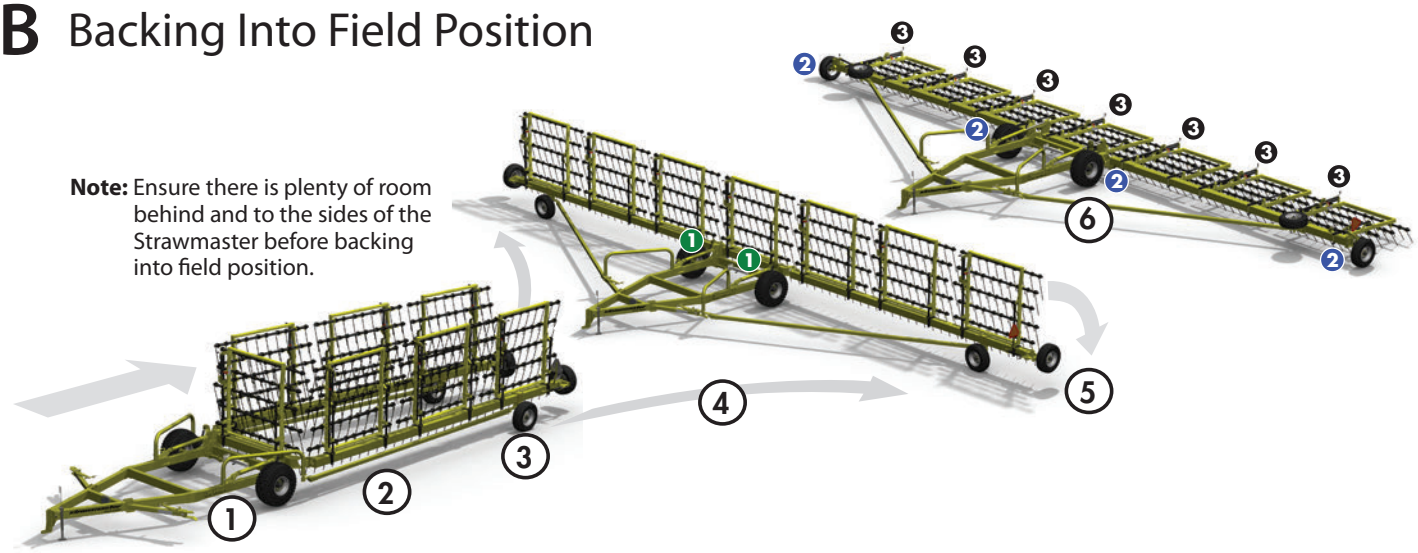

1) Remove Transport Frame Pins (**A**) and place in holders.
Note: Hydraulic models have both frame and cylinder transport pins (**B**).

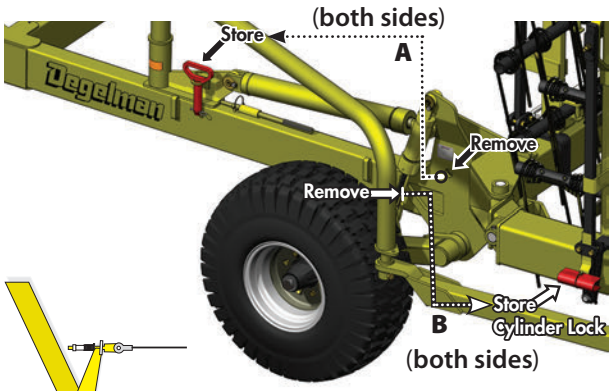

The Auto-Fold Cables should be tight and the latch in the open position.

2) The 50′ model has a telescopic truss beam. Move out into field position and secure with pin. All other models have a fixed length truss arm.

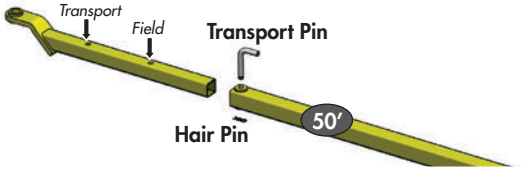

3) Turn the transport wheel's spindle over so the wheel leans out (**both sides**).

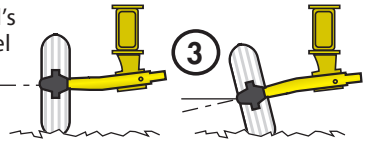

4) Back-up slowly. The wings will open up. Ensure there is lots of room behind and to the sides. Back-up evenly so you don't damage the transport wheels.

⚠ **IMPORTANT:** Be sure to backup evenly to avoid serious damage to the transport wheels.

5) With wings fully opened, lower harrow sections to the ground by extending the auto-fold lift cylinders. ❶

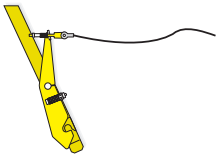

The Auto-Fold cable will loosen and the auto-fold latch should close on the swing arm pipe.

6) If the auto-fold latch(s) still haven't closed, slowly back up just a bit more. It should then snap shut and be fully engaged.

⚠ **ATTENTION:** Before driving forward make sure both latches have fully engaged or serious damage to the machine will result.

Adjust Settings

7) Adjust settings for light or aggressive harrowing.

8) Adjust Tine Angle as needed.

9) Adjust Height Adjustments as needed.

C Setting Tine Angle, Pressure & Frame

NOTE: Strawmaster can have either manual or hydraulic adjustment. Trailer height & tine angle are set by either ratchet/sidewind jacks or hydraulics.

Tine Angle Adjustment

There are no standard angles for running the tines, the operator may adjust the tine angles as needed to achieve desired results.

The following are *suggested* tine angle settings only, adjust as required:

FIELD PACKING 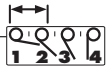

BREAKING & SPREADING STRAW 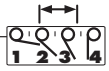

CHEMICAL INCORPORATION 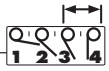

RAKING 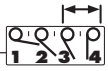

Refer to *Operator's Manual* for more suggested tine angle setting info.

Note: Actual settings will vary with tine wear. Ensure trailer and frame are leveled properly. *(Refer to Height Adjustment)*

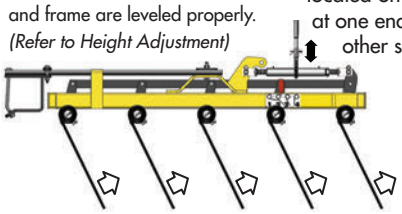

Manual models - Use the manual jacks located on each harrow section. Start at one end, set as desired. Set all the other sections to the same setting. (Manual shown)

Hydraulic models - Retract rephasing tine angle cylinders to raise tines. Extend cylinders to lower.

Hydraulic models - Re-syncronize the tine section cylinders by fully extending the rephasing cylinders and holding for 30 seconds. This should be repeated a few times daily or as needed.

Trailer Height Adjustment

Hydraulic or Manual (with the use of two ratchet jacks, located on trailer wheel arms)

*When trailer height is **set correctly**, it will be even with harrows and...*

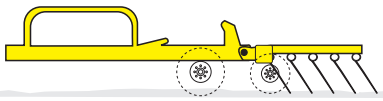

*Front & back tines **apply equal** pressure*

*If trailer is **too high...***

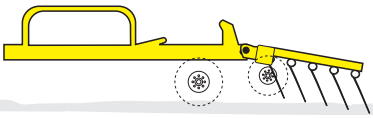

*Front tines **not applying** pressure*

*If trailer is **too low...***

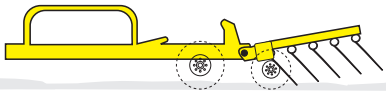

*Front tines **applying too much** pressure*

To manually adjust trailer height:

- Begin with the machine in field position. Make sure the tine angle has been set (if necessary).
- Using the ratchet jack handle for adjustment, adjust ratchet jacks evenly until tines are set to the desired height.
- When adjustments are complete, check that the trailer frame is parallel to the ground.
- If not, adjust clevis height and re-check. Repeat if necessary.

Wing Beam Height Adjustment

- The Wing beams and Center beam should be at the same height, parallel to the ground.
- Adjust the wing beam height when the tine angles are adjusted, the trailer height is adjusted, or as the tines wear down.

Manual models:
Use the manual jacks to raise or lower the wing beam section until desired height/level is achieved.

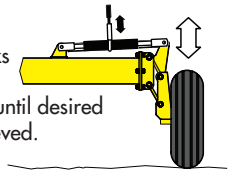

Hydraulic models:
Adjust the fine adjustment rod located on the top of the endwheel linkage until desired height/level is achieved.

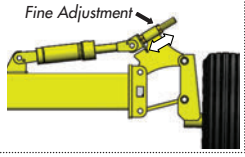

Remember When Operating:

- Straw should be dry.
- A speed of 8 to 12 MPH (12 to 16 KPH) is suggested to efficiently shatter and spread straw and residue.
- The harrow sections can be set in float position, where the section drags the ground under its own weight.
- If machine leaves clumps of straw, apply slight down pressure by extending hydraulic lift cylinders.

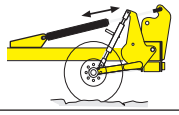

Maintenance
(Check Machine Daily)

- Check for missing, worn or damaged parts.
- Working points & pins
- Hydraulic Connections & Hoses
- Hubs & Spindles

* **Refer to operators manual for complete safety and operation info.**

D Moving Into Transport Position

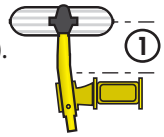

1) Turn the transport wheel's spindle over so the rear transport tires will be completely upright (**both sides**).

2) Operate the lift hydraulics ❶ to fully raise the harrow sections.

3) Carefully drive forward. The wing beams should fold back into transport position.

4) Install the frame transport pins (both sides). On hydraulic models, also install the cylinder transport locks (both sides).

5) On the 50' model with a telescopic truss beam, shorten length into transport position and secure with pin.

6) Ensure SMV sign and reflectors are clean and lights are working. Follow all local transport laws when transporting.

© 2021 Degelman Industries LP

Degelman

STRAWMASTER

** Reference Sheet Quick-Start Guide*

OPERATORS SECTION - TABLE OF CONTENTS

Introduction	***1***
Safety	***2***
Operation	***6***
Overview / Preparation	*6*
Hook-up	*8*
Convert to Field Position	*9*
Suggested Tine Angle Settings	*10*
Height Adjustment	*11*
Transporting / Storage	*12*
Service & Maintenance	***13***
Service	*13*
Rephasing the Cylinder Circuits	*15*
Cylinder Repair	*16*
Tine Replacement	*19*
Wheel Hub Repair	*20*
Troubleshooting	***21***

PARTS SECTION - TABLE OF CONTENTS 23

Warranty ***46***

DEGELMAN INDUSTRIES LP
BOX 830-272 INDUSTRIAL DRIVE,
REGINA, SK, CANADA, S4P 3B1
FAX 306.543.2140 PH 306.543.4447
1.800.667.3545 DEGELMAN.COM

IMPORTANT:



READ MANUAL

STRAWMASTER



CONGRATULATIONS on your choice of a Degelman Strawmaster to complement your farming operation. It has been designed and manufactured to shatter straw, control weeds, rake flax straw, and incorporate seed and chemicals. Use this manual as your first source of information about this machine.

Safe, efficient and trouble free operation of your Degelman Strawmaster requires that you and anyone else who will be operating or maintaining it, read and understand the Safety, Operation, Maintenance and Troubleshooting information contained within this manual.

Keep this manual handy for frequent reference and to pass on to new operators or owners. Call your Degelman Dealer if you need assistance, information, or additional copies of the manual.

OPERATOR ORIENTATION - The directions left, right, front and rear, as mentioned throughout the manual, are as seen from the tractor drivers' seat and facing in the direction of travel.

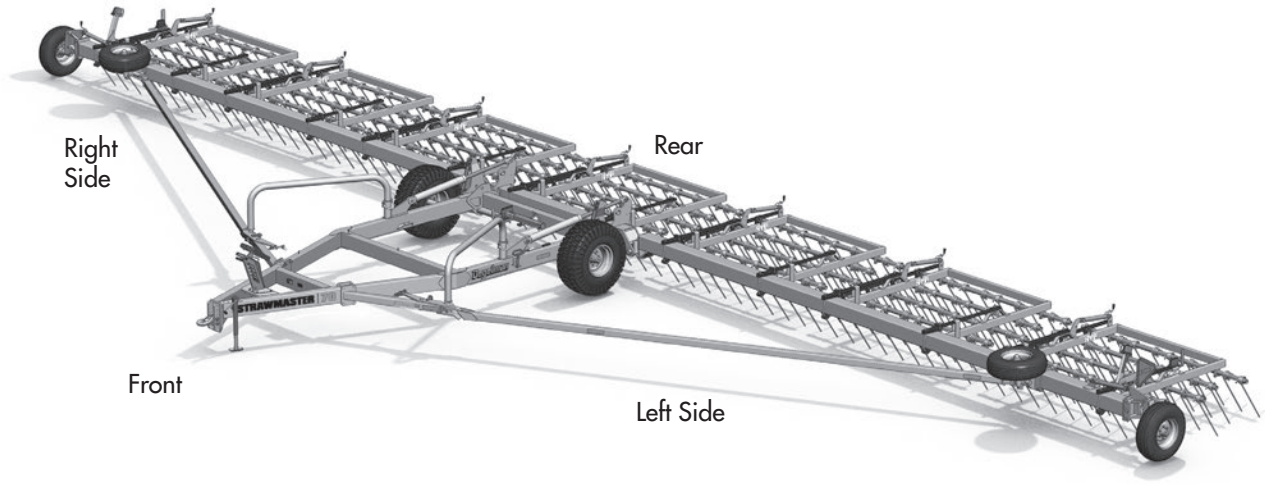

Why is SAFETY important to YOU?

3 BIG Reasons:

- **Accidents Can Disable and Kill**
- **Accidents Are Costly**
- **Accidents Can Be Avoided**



SAFETY ALERT SYMBOL

The **Safety Alert Symbol** identifies important safety messages applied to the Strawmaster and in this manual. When you see this symbol, be alert to the possibility of **injury or death**. Follow the instructions provided on the safety messages.

The **Safety Alert Symbol** means:

ATTENTION!
BECOME ALERT!
YOUR SAFETY IS INVOLVED!

SIGNAL WORDS

Note the use of the Signal Words: **DANGER**, **WARNING**, and **CAUTION** with the safety messages. The appropriate Signal Word has been selected using the following guidelines:

DANGER

DANGER: Indicates an imminently hazardous situation that, if not avoided, **WILL** result in death or serious injury if proper precautions are not taken.

WARNING

WARNING: Indicates a potentially hazardous situation that, if not avoided, **COULD** result in death or serious injury if proper precautions are not taken.

CAUTION

CAUTION: Indicates a potentially hazardous situation that, if not avoided, **MAY** result in minor or moderate injury if proper practices are not taken, or, serves as a reminder to follow appropriate safety practices.

SAFETY

YOU are responsible for the safe operation and maintenance of your Degelman Strawmaster. **YOU** must ensure that you and anyone else who is going to operate, maintain or work around the Strawmaster be familiar with the operating and maintenance procedures and related **SAFETY** information contained in this manual.
This manual will take you step-by-step through your working day and alerts you to all good safety practices that should be adhered to while operating this equipment.

Remember, **YOU** are the key to safety. Good safety practices not only protect you but also the people around you. Make these practices a working part of your safety program. Be certain that **EVERYONE** operating this equipment is familiar with the recommended operating and maintenance procedures and follows all the safety precautions. Most accidents can be prevented. Do not risk injury or death by ignoring good safety practices.

- Strawmaster owners must give operating instructions to operators or employees before allowing them to operate the Strawmaster, and at least annually thereafter per OSHA regulation 1928.51.
- The most important safety device on this equipment is a SAFE operator. It is the operator's responsibility to read and understand ALL Safety and Operating instructions in the manual and to follow these. All accidents can be avoided.
- A person who has not read and understood all operating and safety instructions is not qualified to operate the machine. An untrained operator exposes himself and bystanders to possible serious injury or death.
- Do not modify the equipment in any way. Unauthorized modification may impair the function and/or safety and could affect the life of the equipment.
- Think SAFETY! Work SAFELY!

GENERAL SAFETY

1. Read and understand the Operator's Manual and all safety signs before operating, maintaining or adjusting the Strawmaster.



2. Install and properly secure all shields and guards before operating. Use hitch pin with a mechanical locking device.
3. Have a first-aid kit available for use should the need arise and know how to use it.



4. Have a fire extinguisher available for use should the need arise and know how to use it.



5. Wear appropriate protective gear. This list includes but is not limited to:
   - A hard hat
   - Protective shoes with slip resistant soles
   - Protective glasses or goggles
   - Heavy gloves
   - Wet weather gear
   - Hearing protection
   - Respirator or filter mask



6. Clear the area of people, especially small children, and remove foreign objects from the machine before starting and operating.
7. Do not allow riders.
8. Stop tractor engine, set park brake, remove ignition key and wait for all moving parts to stop before servicing, adjusting, repairing or unplugging.
9. Review safety related items with all operators annually.

OPERATING SAFETY

1. Read and understand the Operator's Manual and all safety signs before using.

2. Stop tractor engine, set park brake, remove ignition key and wait for all moving parts to stop before servicing, adjusting, repairing or unplugging.

3. Keep hands, feet, hair and clothing away from all moving and/or rotating parts.

4. Do not allow riders on the Strawmaster or tractor during operation or transporting.

5. Keep all shields and guards in place when operating.

6. Clear the area of all bystanders, especially children, before starting.

7. Do not operate machine on steep side hills or slopes.

8. Be careful when working around or maintaining a high-pressure hydraulic system. Ensure all components are tight and in good repair before starting.

9. Clean all reflectors, lights and the SMV sign before transporting on a highway or public road. Be sure to check with local highway authorities and comply with their lighting requirements.

MAINTENANCE SAFETY

1. Review the Operator's Manual and all safety items before working with, maintaining or operating the Strawmaster.

2. Stop the tractor engine, set park brake, remove ignition key and wait for all moving parts to stop before servicing, adjusting, repairing or unplugging.

3. Keep hands, feet, clothing and hair away from all moving and/or rotating parts.

4. Clear the area of bystanders, especially children, when carrying out any maintenance and repairs or making any adjustments.

5. Place safety stands or large blocks under the frame before removing tires or working beneath the machine.

6. Be careful when working around or maintaining a high-pressure hydraulic system. Wear proper eye and hand protection when searching for a high pressure hydraulic leak. Use a piece of wood or cardboard as a backstop when searching for a pin hole leak in a hose or a fitting.

7. Always relieve pressure before disconnecting or working on hydraulic system.

HYDRAULIC SAFETY

1. Always place all tractor hydraulic controls in neutral before dismounting.

2. Make sure that all components in the hydraulic system are kept in good condition and are clean.

3. Replace any worn, cut, abraded, flattened or crimped hoses and metal lines.

4. Do not attempt any makeshift repairs to the hydraulic lines, fittings or hoses by using tape, clamps or cements. The hydraulic system operates under extremely high-pressure. Such repairs will fail suddenly and create a hazardous and unsafe condition.

5. Wear proper hand and eye protection when searching for a high-pressure hydraulic leak. Use a piece of wood or cardboard as a backstop instead of hands to isolate and identify a leak.

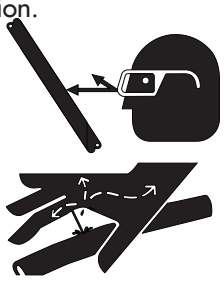

6. If injured by a concentrated high-pressure stream of hydraulic fluid, seek medical attention immediately. Serious infection or toxic reaction can develop from hydraulic fluid piercing the skin surface.

7. Before applying pressure to the system, make sure all components are tight and that lines, hoses and couplings are not damaged.

• Think SAFETY! Work SAFELY

TRANSPORT SAFETY

1. Read and understand ALL the information in the Operator's Manual regarding procedures and SAFETY when operating the Strawmaster in the field/yard or on the road.

2. Check with local authorities regarding machine transport on public roads. Obey all applicable laws and regulations.

3. Always travel at a safe speed. Use caution when making corners or meeting traffic.

4. Make sure the SMV *(Slow Moving Vehicle)* emblem and all the lights and reflectors that are required by the local highway and transport authorities are in place, are clean and can be seen clearly by all overtaking and oncoming traffic.

5. Keep to the right and yield the right-of-way to allow faster traffic to pass. Drive on the road shoulder, if permitted by law.

6. Always use hazard warning flashers on tractor when transporting unless prohibited by law.

7. Always use a pin with provisions for a mechanical retainer and a safety chain when attaching to a tractor or towing vehicle.

TIRE SAFETY

1. Failure to follow proper procedures when mounting a tire on a wheel or rim can produce a blow out which may result in serious injury or death.

2. Do not attempt to mount a tire unless you have the proper equipment and experience to do the job.

3. Have a qualified tire dealer or repair serviceman perform required tire maintenance.

Operation

TO THE NEW OPERATOR OR OWNER

The Degelman Strawmaster is designed for effective straw management, weed control, herbicide application, raking flax residue and following ground contour. The Strawmaster is fully adjustable from tine angle to operating height with the use of gear driven jacks or optional hydraulics. The harrow sections can operate in a float position or under a variable amount of pressure with the use of hydraulics and spring bars.

It is the responsibility of the owner or operator to read this manual carefully to learn how to operate the machine safely, and how to set it to provide maximum efficiency. Safety is everyone's business. By following safe operating practices, a safe environment is provided for the operator and bystanders.

The manual will take you step-by-step through your working day. By following the operating instructions in conjunction with a good maintenance program your machine will provide many years of trouble-free service.

PRINCIPLES OF OPERATION

The Strawmaster harrow sections consist of five rows with ten tines per row which hold the straw. As the tines drag along the ground, they oscillate to build up a high frequency vibration and provide a shattering action which breaks up the straw allowing the residue to be spread evenly as it is released. When stood vertically the tines will rake flax residue.

BRIEF OVERVIEW OF OPERATION

- Operating speed will depend on tractor horsepower, environmental conditions and each particular operation. A speed of 8 to 12 MPH. (12 to 16 KPH) is suggested to efficiently shatter and spread straw and residue.
- Operating height for the harrow will vary with the length of the tines, and the angle that the tines are set at. As the tines wear down, the height of the machine from the ground will have to be adjusted down proportionally. *(Refer to the Height Adjustments section)*
- The harrow sections can be set in float position, where the section drags the ground under its own weight.
- Pressure can be applied using the hydraulics to rotate the beam further back. The spring bars will deflect to apply pressure to the harrow section and the ground. The amount of pressure to apply will depend on the application, and the operator's preference.

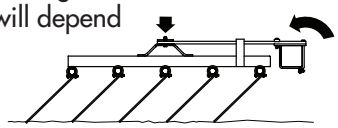

- Some suggested settings can be found in the "Suggested Tine Angle Settings" section. As there are only a few standard guidelines, feel free to experiment with ground clearance, tine angle and section pressure to obtain desired results for each operation.

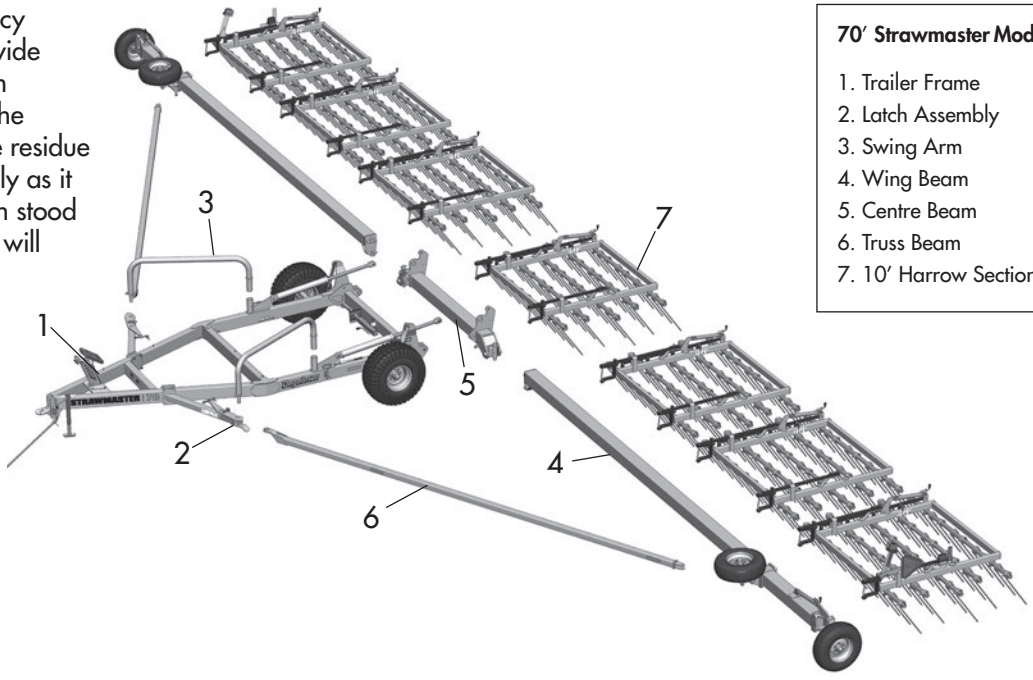

70′ Strawmaster Model

1. Trailer Frame
2. Latch Assembly
3. Swing Arm
4. Wing Beam
5. Centre Beam
6. Truss Beam
7. 10′ Harrow Section

Operation

BREAK-IN

Although there are no operational restrictions on the Strawmaster when it is new, there are some mechanical checks that must be done to ensure the long term integrity of the unit. When using the machine for the first time, follow this procedure:

⚠ **IMPORTANT:** *It is extremely important to follow all of the Break-In procedures especially those listed in the "Before using" section below to avoid damage:*

A. Before using:

1. Read Safety Info. & Operator's Manual.
2. Complete steps in "Pre-Operation Checklist".
3. Lubricate all grease points.
4. Check all bolt tightness.

B. After operating for 2 hours:

1. Check all hardware. Tighten as required.
2. Check all hydraulic system connections. Tighten if any are leaking.

C. After operating for 8 hours:

1. Repeat Step B.
2. Re-torque all bolts on harrow sections and mounting brackets.
3. Go to the service schedule as outlined in the "Service & Maintenance" section.

⚠ OPERATING SAFETY

- Read and understand the Operator's Manual before starting.
- Lower to ground, stop engine, place all controls in neutral, set park brake and remove ignition key before servicing, adjusting or repairing.
- Keep hands, feet, hair and clothing away from all moving and/or rotating parts.
- Do not allow riders.
- Clear the area of bystanders, especially small children.
- Stay well back from machine when operating. Keep others away.

PRE-OPERATION CHECKLIST

It is important for both personal safety and maintaining the good mechanical condition of the machine that this pre-operational checklist be followed:

Before operating the machine and each time thereafter, the following areas should be checked off: ☑

☐ Lubricate the machine per the schedule outlined in the "Service & Maintenance Section".

☐ Use only a tractor with adequate power to pull the Strawmaster under ordinary operating conditions:

	Minimum	**Ideal**
5 Row - **50' model**:	*150 HP*	**200 HP**
5 Row - **70' model**:	*200 HP*	**300 HP**
5 Row - **82' model**:	*300 HP*	**350 HP**
7 Row - **50' model**:	*300 HP*	**350 HP**
7 Row - **70' model**:	*400 HP*	**450 HP**
7 Row - **82' model**:	*475 HP*	**525 HP**

☐ Ensure the Hitch Clevis is set at the correct height for the tractor drawbar and trailer height. *(Refer to the "Height Adjustment" section for settings)*

☐ Ensure that the machine is properly attached to the tractor using a drawbar pin with provisions for a mechanical retainer. Make sure that a retainer such as a Klik pin is installed.

NOTE: *It is important to pin the draw bar in the central location only.*

☐ Check tires and ensure that they are inflated to the specified pressure. *(Refer to specifications page)*

☐ Ensure that a safety chain on the hitch is installed.

☐ Check oil level in the tractor hydraulic reservoir. Top up as required.

☐ Inspect all hydraulic lines, hoses, fittings and couplers for tightness. Tighten if there are leaks. Use a clean cloth to wipe any accumulated dirt from the couplers before connecting to the tractor's hydraulic system.

☐ Check all the machine settings, refer to Adjustment section. Perform adjustments as necessary.

☐ Follow "Rephasing the Cylinder Circuits" procedure.

IMPORTANT: To ensure optimum performance, all entrapped air must be purged from the rephasing cylinder systems frequently.

☐ Check tines, remove entangled debris. Replace damaged tines. If tines are 16 in. or less in length, they should be replaced. *(New tine length: 26 in.)* See section on Tine Replacement.

HOOK-UP / UNHOOKING

The Strawmaster should always be parked on a level, dry area that is free of debris and foreign objects. Follow this procedure to hook-up:

1. Clear the area of bystanders and remove foreign objects from the machine and working area.
2. Make sure there is enough room to back the tractor up to the trailer hitch.
3. Start the tractor and slowly back it up to the hitch point.
4. Stop the tractor engine, place all controls in neutral, set park brake and remove ignition key before dismounting.
5. Use the trailer jack to raise or lower the hitch to align with the drawbar.
6. Install a drawbar pin with provisions for a mechanical retainer such as a KLIK pin. Install the retainer.
7. Install a safety chain between the tractor and the hitch.
8. Connect the hydraulics. To connect, proceed as follows:

- Use a clean cloth or paper towel to clean the couplers on the ends of the hoses. Also clean the area around the couplers on the tractor. Remove the plastic plugs from the couplers and insert the male ends.

- Be sure to match the pressure and return line to one valve bank.

9. Raise the Front Hitch Jack and rotate it 90° to place in its stowed position.
10. Raise Rear Hitch Jack (50′/70′ Models) or the two (2) Wing Jacks (82′ Models) and rotate 90° to place in stowed position.
11. When unhooking from the tractor, reverse the above procedure.

⚠ **DANGER/WARNING:** **NEVER** disconnect the Strawmaster from the tractor without **Rear Hitch Jack** (50′/70′ Models) or both (2) **Wing Jacks** (82′ Models) being lowered and engaged with the ground.



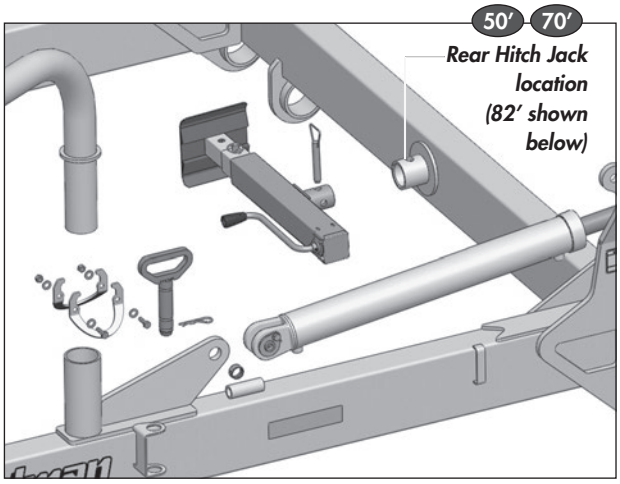

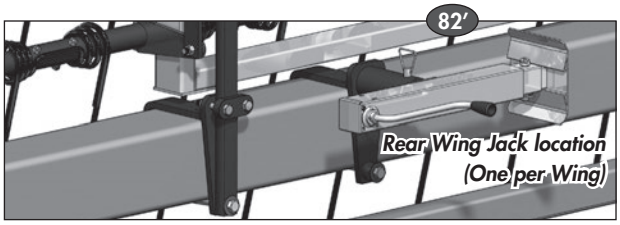

Operation - Convert to Field Position

TO CONVERT TO FIELD POSITION

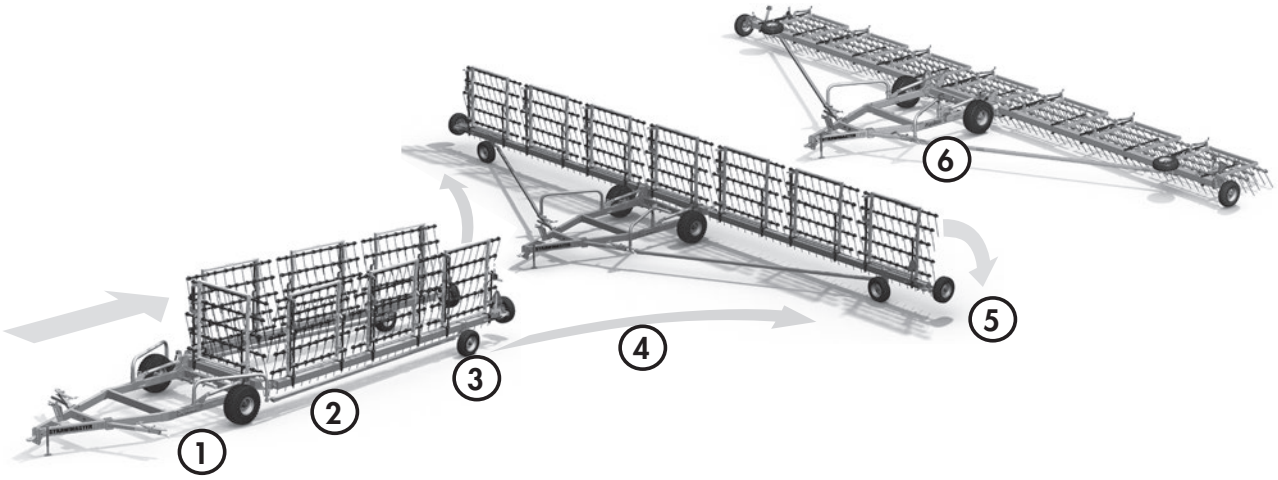

1. Remove frame transport pins and place in holders. **Both sides.** (**NOTE:** Hydraulic models have both frame and cylinder transport pins).

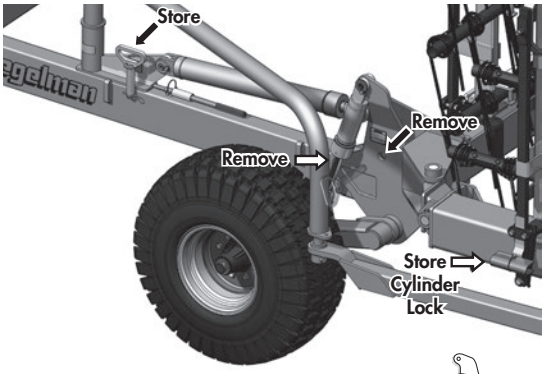

The Auto-Fold Cables should be tight and the latch in the open position.

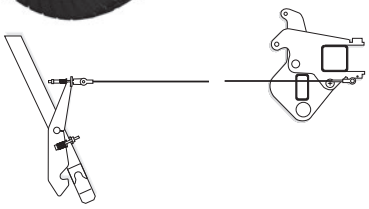

2. The 50′ model has a telescopic truss beam. Move out into field position and secure with pin. All other models have a fixed length truss arm.

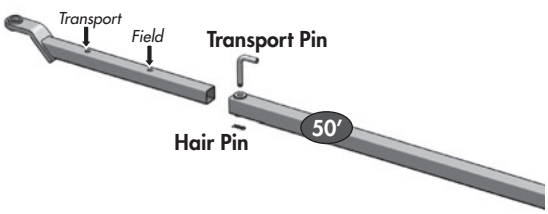

3. Turn the transport wheel's spindle over so the wheel leans out. **Both sides.**

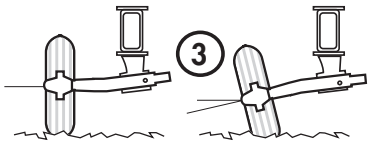

4. Back-up slowly. The wings will open up. Ensure there is lots of room behind and to the sides. Back-up evenly so you don't damage the transport wheels.

⚠ **IMPORTANT:** Be sure to backup evenly to avoid serious damage to the transport wheels.

5. With wings fully opened, lower harrow sections to the ground by extending the auto-fold cylinders. The Auto-Fold cable will loosen and the auto-fold latch should close on the swing arm pipe.

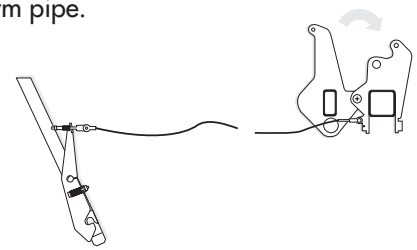

6. If the auto-fold latch(s) still haven't closed, slowly back up just a bit more. It should then snap shut and be fully engaged.

⚠ **ATTENTION:** Before driving forward make sure both latches have fully engaged or serious damage to the machine will result.

Operation - Suggested Tine Angle Settings

The following lists *suggested* tine angle settings. Since there are no standard angles for running the tines, the operator may adjust the tine angles as required to achieve desired results.

REMEMBER:

- Actual settings will vary with tine wear.
- Ensure trailer and frame are leveled properly. (Refer to the "Height Adjustment" section.)

FIELD PACKING

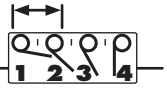

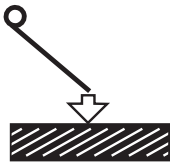

- Begin operating Strawmaster with the lift hydraulics in float position, if more compaction is required, rotate 8"x8" beam by extending main lift cylinders.
- To avoid deep ridges in your field, reduce down pressure and operate at lower speeds; 5 - 6 mph.
- If packing is done after seeding, make sure to check that seed is not being disturbed.
- To prevent tine damage, avoid tight turning.

BREAKING & SPREADING STRAW

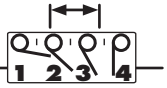

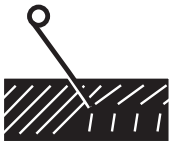

- For best results operate at 10 to 12 mph.
- The straw built up in the harrow sections helps to achieve maximum rub action to break down straw.

TOUGH STRAW

- Advance the tine angle to a more aggressive setting. This will hold straw for a longer period of time, allowing for a more even distribution of residue. REMEMBER: Breaking down straw is much more effective in dry conditions.
- A second pass may be required in extremely heavy straw conditions. (Work the second pass at a 45 degree angle to how it was worked the first time).

REMEMBER WHEN OPERATING:

- Straw should be dry.
- If machine leaves clumps of straw, apply slight down pressure by extending hydraulic lift cylinders.

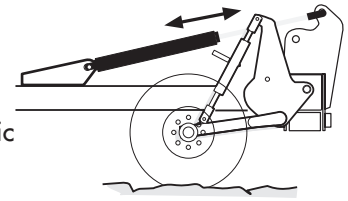

RAKING

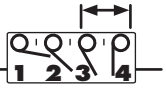

MACHINE PREPARATION

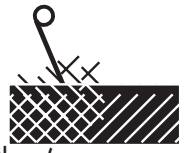

- Remove auto-fold cable pins on the 8"x 8" beam side. Loop the unfastened end of each cable around the cart frame and clip together (or remove auto-fold cable completely). By simply removing one bolt on each axle, remove both transport wheel assemblies.

THE FIELD

- Work the field at 45 degrees to the seeding line.
- In order to rake flax straw some down pressure is required.
- Before built-up straw starts to spill out the back of the machine dump straw load by lifting harrow sections.

CHEMICAL INCORPORATION

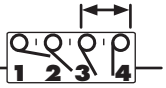

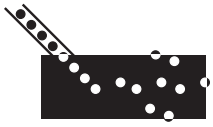

- Increasing downward pressure will help break the soil crust and place the granule in contact with moist soil.
- Avoid straw build up in the first two rows of tines. This makes for a more even granule or seed broadcast.

⚠ **IMPORTANT:** Always follow label directions for chemical herbicides.

- Valmar Airflow offers all the necessary hardware required to neatly install their applicator on the Strawmaster®.

The Valmar Airflow Model 3255 can be used with the 50', 70' & 82' Strawmaster®.

The Model 2055 can be used on 50' Strawmaster®.

Operation - Height Adjustment

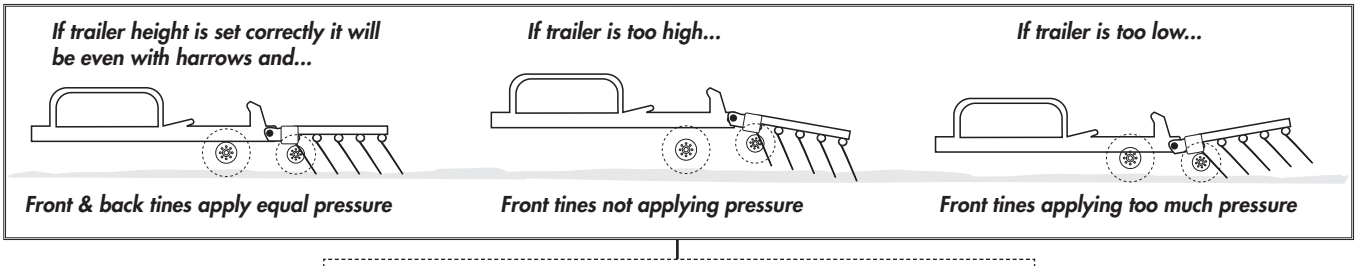

NOTE: Strawmaster can have either manual or hydraulic adjustment. Trailer height & tine angle are set by either ratchet/sidewind jacks or hydraulics.

TINE ANGLE ADJUSTMENT

Tine angle adjustment should be made with the machine in field position. For suggested initial settings with new tines, refer to the "Suggested Tine Angle Settings" section.

To Manually adjust tine angle:
Use the manual jacks located on each harrow section. Start at one end, set as desired. Set all the other sections to the same setting.

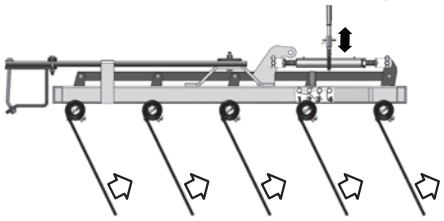

To Hydraulically adjust tine angle:
Retract rephasing tine angle cylinders to raise tines. Extend cylinders to lower.

HITCH CLEVIS ADJUSTMENT

The trailer frame hitch should be parallel to the ground when operating. It will be necessary to adjust the hitch clevis height each time the trailer height is adjusted due to tine wear.

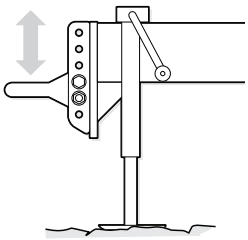

To adjust the hitch clevis location, hook-up the tractor to the trailer hitch, following the procedure in the section "Hook-up/Unhooking". Stand back and check to see if the trailer hitch is parallel to the ground. If not, use the sidewind jack to raise the trailer hitch and centre the clevis to the drawbar. Remove the clevis mounting pins and move the clevis up or down as required. Install the clevis mounting pins and retainers. Lower the trailer hitch.

Stand back to check if the trailer hitch is level. If not, repeat procedure.

TRAILER HEIGHT ADJUSTMENT

Trailer height will require adjustment as the tines wear down, or as the tine angle is increased.

Trailer height is adjustable either hydraulically or manually with the use of two ratchet jacks, each located on the trailer wheel arms.

To manually adjust trailer height:
Begin with the machine in field position. Make sure the tine angle has been set, if necessary. Use the ratchet jack handle for adjustment. Adjust ratchet jacks evenly until tines are set to a desired height. If trailer frame cannot be lowered any further, replace tines or check tine angle.

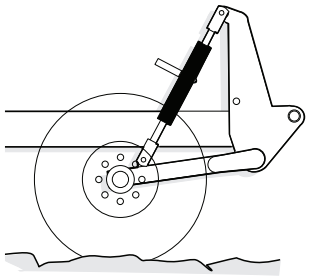

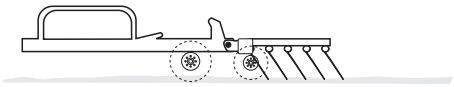

When adjustments are complete, check that the trailer frame is parallel to the ground. If not, adjust clevis height and re-check. Repeat if necessary.

WING BEAM HEIGHT ADJUSTMENT

With the machine in field position, the wing beams and centre beam should be at the same height, parallel to the ground. Adjustment to the wing beam height is required when the tines wear down, the tine angle is adjusted, or the trailer height is adjusted.

To Manually adjust height:
Use the manual jack to raise or lower the wing beam section, until desired height is achieved.

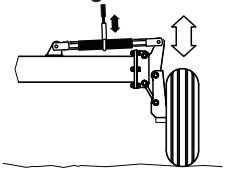

The Hydraulic adjustment option also incorporates a fine adjustment rod on the top endwheel linkage.

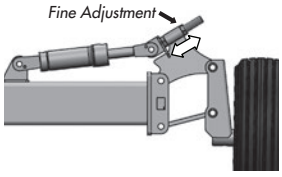

⚠ TRANSPORT SAFETY

- Use only a drawbar pin with a mechanical retainer, and a safety chain.
- Under no circumstances should there ever be riders while the Strawmaster is in transport.



- Clean SMV sign, lights & reflectors before starting.
- Always use hazard flashing lights on tractor.
- Travel at a safe speed. Use care when making corners or meeting traffic.
- Check with local authorities regarding machine transport on public roads. Obey all applicable laws and regulations.

TRANSPORT

Follow this procedure when preparing to transport:

1. Clear the area of bystanders, especially small children, before converting into transport configuration.
2. To ensure minimum tire wear, position the bent axle of the wing beam transport wheels so that the rear transport tires will be in the completely upright position during transport.

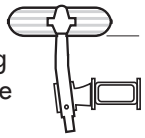

3. Operate the lift hydraulics to raise the harrow sections.
4. Carefully drive forward. The wing beams should fold back into transport position.
5. Install the transport pins.
6. 50' models only: Remove the black pin on the truss beam. Rotate the swingarm back to slide the truss beam in and line up holes. Install pin and secure with hair clip.

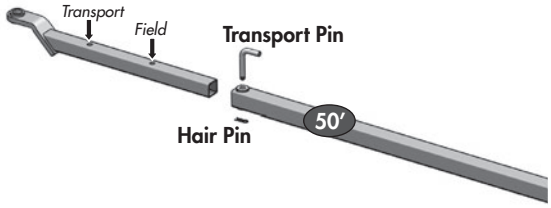

7. Clean the SMV sign, lights and reflectors.
8. Use hazard flashers on tractor unless prohibited by law.
9. Maintain a safe speed. Slow down when cornering on rough roads, and pull off to the side of the road when meeting traffic.

⚠ STORAGE SAFETY

- Store in an area away from human activity.
- Do not allow children to play on or around the stored unit.

STORAGE

After the season's use, completely inspect all major systems of the machine. Repair or replace any worn or damaged components to prevent unnecessary down time at the beginning of next season.

Since the unit can be used in extremely adverse conditions during the season, the machine should be carefully prepared for storage to ensure that all dirt, mud, debris and moisture has been removed.

Follow this procedure when preparing to store:

1. Wash the entire machine thoroughly using a water hose or pressure washer to remove all dirt, mud, debris or residue.
2. Inspect all parts to see if anything has become entangled in them. Remove the entangled material.
3. Lubricate all grease fittings to remove any moisture in the bearings.
4. Inspect all hydraulic hoses, fittings, lines and couplers. Tighten any loose fittings. Replace any hose that is badly cut, nicked or abraded or is separating from the crimped end of the fitting.
5. Touch up all paint nicks and scratches to prevent rusting.
6. Retract the harrow tine cylinders (optional). Oil exposed rods on hydraulic cylinders to prevent rusting.
7. Select an area that is dry, level and free of debris.
8. Follow the procedure given in the section "Hook-Up/Unhooking" when unhooking.

⚠ MAINTENANCE SAFETY

- Stop tractor engine, set park brake and remove ignition key before servicing, adjusting, repairing or maintaining.
- Be careful when working around or maintaining a high pressure hydraulic system. Wear the proper hand and eye protection when searching for a pin hole leak in a hose or fitting.
- Place safety stands or large blocks under the frame before removing the tires or working beneath the machine.

SERVICE

GREASING

Use an SAE multipurpose grease with extreme pressure (EP) performance. Also acceptable is an SAE multipurpose lithium base grease.

1. Use only a hand-held grease gun for all greasing.
2. Wipe grease fitting with a clean cloth before greasing, to avoid injecting dirt.
3. Replace and repair broken fittings immediately.
4. If fittings will not take grease, remove and clean thoroughly. Also clean lubricant passageway. Replace fitting if necessary.
5. Inject grease until you see grease being expelled from the bearing or bushing areas.

MAINTENANCE CHECKLIST

Daily - 8 Hours

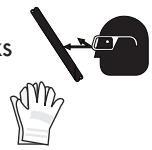

- Hydraulic Fluid Leaks
- Damaged Hoses
- Check Tire Pressure

Cart/Trailer Tires: *(Check Tire for Size)*

16.5L x16.1 - 6 PLY	**48 PSI** (330 kPa)
Option: 550/45-22.5	**41 PSI** (283 kPa)

Endwheel & Transport Tires: *(Check Tire for Size)*

9.5L x15 - 8 PLY	**60 PSI** (414 kPa)
11L x15 - 12 PLY	**90 PSI** (620 kPa)
12.5L x15 - 12 PLY	**90 PSI** (620 kPa)

Weekly - 25 Hours



- Working Points & Pins
- Tine Wear
- Safety Signs Clean

Annually - 200 Hours



- Bolt Tightness
- Wheel Bearings
- Latch Mechanism
- Cable Assembly

⚠ **IMPORTANT:** To ensure optimum performance, all entrapped air must frequently be purged from the *Rephasing Cylinder* systems.

Follow the "Rephasing the Cylinder Circuits" procedure.

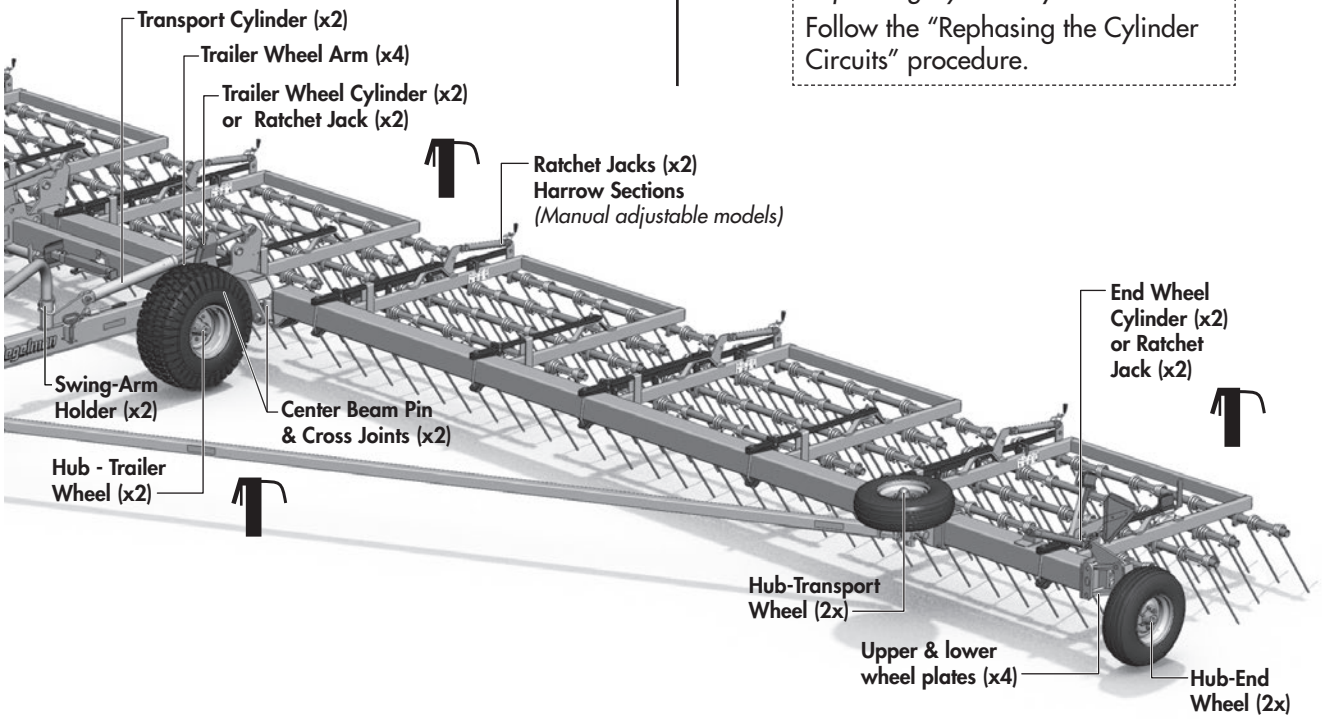

TORQUE SPECIFICATIONS

CHECKING BOLT TORQUE

The tables shown below give correct torque values for various bolts and capscrews. Tighten all bolts to the torques specified in chart unless otherwise noted. Check tightness of bolts periodically, using bolt torque chart as a guide. Replace hardware with the same strength (Grade/Class) bolt.

IMPERIAL TORQUE SPECIFICATIONS

(based on "Zinc Plated" values)



Size	Grade 5	Grade 8
	lb.ft (*N.m*)	lb.ft (*N.m*)
1/4"	**7 (*10*)**	**10 (*14*)**
5/16"	15 (*20*)	20 (*28*)
3/8"	**25 (*35*)**	**35 (*50*)**
7/16"	40 (*55*)	60 (*80*)
1/2"	**65 (*90*)**	**90 (*120*)**
9/16"	90 (*125*)	130 (*175*)
5/8"	**130 (*175*)**	**180 (*245*)**
3/4"	230 (*310*)	320 (*435*)
7/8"	**365 (*495*)**	**515 (*700*)**
1"	550 (*745*)	770 (*1050*)
1-1/8"	**675 (*915*)**	**1095 (*1485*)**
1-1/4"	950 (*1290*)	1545 (*2095*)
1-3/8"	**1250 (*1695*)**	**2025 (*2745*)**
1-1/2"	1650 (*2245*)	2690 (*3645*)

METRIC TORQUE SPECIFICATIONS

(based on "Zinc Plated" values)



Size	Class 8.8	Class 10.9
	lb.ft (*N.m*)	lb.ft (*N.m*)
M6	**7 (*10*)**	**10 (*14*)**
M8	16 (*22*)	23 (*31*)
M10	**30 (*42*)**	**45 (*60*)**
M12	55 (*75*)	80 (*108*)
M14	**90 (*120*)**	**125 (*170*)**
M16	135 (*185*)	195 (*265*)
M18	**190 (*255*)**	**270 (*365*)**
M20	265 (*360*)	380 (*515*)
M22	**365 (*495*)**	**520 (*705*)**
M24	460 (*625*)	660 (*895*)
M27	**675 (*915*)**	**970 (*1315*)**
M30	915 (*1240*)	1310 (*1780*)
M33	**1250 (*1695*)**	**1785 (*2420*)**
M36	1600 (*2175*)	2290 (*3110*)

HARDWARE/HOSE SPECIFICATIONS

Unless otherwise stated:

- Hardware - Hex, Plated GR5 UNC or P8.8 (metric)
- Hydraulic Hoses - 3/8 & 1/2, ends come with 3/4 JIC female swivel.

WHEEL NUT & WHEEL BOLT TORQUE

BOLT PATTERNS

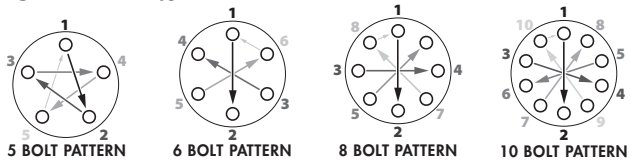

Wheel Nut/Bolt Torque

Size	lb.ft (N.m)
9/16	120-130 (165-175)
5/8	185-190 (250-260)

Wheel Tightening Procedure

1. Install and **hand tighten** nuts/bolts.
2. Tighten to approx **20% Torque** value using the 10 Bolt **Star or CrissCross** pattern shown above.
3. Tighten to **Full Torque** value using the **Star or CrissCross** pattern.
4. If applicable, install **Rear Locknuts** using **Wheel Torque Values**.

HYDRAULIC FITTING TORQUE

Hydraulic Fitting Torque*

Size	lb.ft (N.m)
1/2	34 (46)
3/4	75 (100)
7/8	90 (122)

* The torque values shown are based on lubricated connections as in reassembly.

Tightening Flare Type Tube Fittings

1. Check flare and flare seat for defects that might cause leakage.
2. Align tube with fitting before tightening.
3. Lubricate connection and hand tighten swivel nut until snug.
4. To prevent twisting the tube(s), use two wrenches. Place one wrench on the connector body and with the second tighten the swivel nut to the torque shown.

REPHASING THE CYLINDER CIRCUITS

In order to synchronize the raising and lowering of the Strawmaster, a hydraulic phasing system has been implemented in both the Harrow Section circuit and the Trailer Cart/Wheel Height circuit to help provide uniform and level lifting.

In order to achieve this, a bypass port is integrated into the cylinders. Upon full extension a metered amount of fluid is allowed to bypass the piston seal to the next adjacent cylinder in the system. This re-adjusts all cylinders to the same position, then upon retraction positive sealing is engaged and synchronized operation continues.

IMPORTANT: To ensure optimum performance all entrapped air must be purged from the rephasing cylinder systems frequently. This fully rephrasing and air purging process is also important because pressure buildup, or "pressure jacking" may occur, that may cause damage to the smallest cylinder. (This process should be done for both the Harrow Section and the Trailer/Wheel circuits)

The following procedure outlines a suggested method for purging the air and re-synchronizing the system:

1. Place machine so all sections are lowered and flat in field position.
2. Set the Tractor flow to **Minimum / Moderate**. Do NOT set tractor flow to maximum. Reducing the oil flow will reduce the amount of air that gets pressurized and mixed into the oil.
3. Cycle the cylinders - fully extended, fully retracted, and then fully extended again, this time holding it fully extended for about 30-40 seconds.
4. Repeat this cycle and hold process about 5 times.

AUTOFOLD LATCH ADJUSTMENT

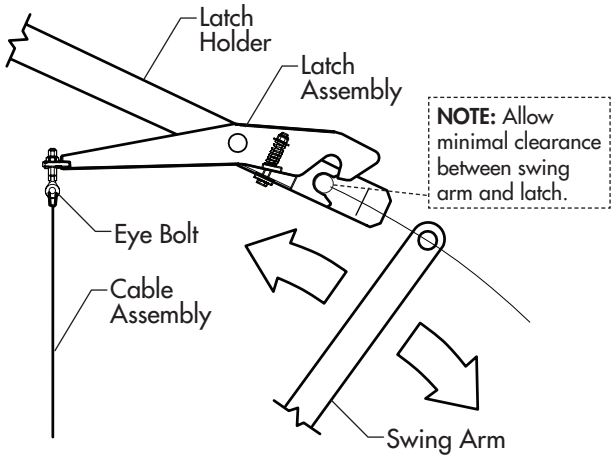

The cable may stretch after a period of time. The latch assembly may not swing over far enough to allow the swing arm shaft to clear.

To adjust the latch assembly, start with the machine in transport position. Tighten the nut on the eyebolt until the end of the swing arm shaft clears the latch assembly.

To check the clearance: Remove the truss beam from the swing arm and swing forward to check the clearance. Or, follow the procedure to convert to machine to field position.

Repeat adjustment procedure if required.

REPLACEMENT DECALS AND REFLECTORS

Trailer frame
- 142697 - Strawmaster 50 (2)
- 142698 - Strawmaster 70 (2)
- 142699 - Strawmaster 82 (2)
- 142383 - Caution, 6 Points (1)
- 142963 - Danger, Negative Hitch Weight (1)
- 142368 - Important, Install Pin (2)
- 142008 - Degelman - 6 x 25-3/4 (2)
- 143162 - Manual Holder Decal (1)
- 142557 - Reflector, Amber - 9 (2)
- 142556 - Reflector, Red - 9 (1)
- 142650 - Reflector, Fluorescent - 9 (1)

Auto-fold Arm
- 142439 - Important, Back-up Evenly (2)
- 142279 - Reflector, Amber - 9 (2)

Truss Arms
- 142279 - Reflector, Amber - 9 (4)

Harrow Section Frame
- 142010 - Degelman, 2-3/4 x 12 (1)
- 142823 - Tine Gauge Decal (1)

Harrow Section (Outer Frame of RH & LH only)
- 142556 - Reflector, Red - 9 (2)
- 142650 - Reflector, Fluorescent - 9 (2)

HYDRAULIC CYLINDER REPAIR

PREPARATION

When cylinder repair is required, clean off unit, disconnect hoses and plug ports before removing cylinder.

When removed, open the cylinder ports and drain the cylinder's hydraulic fluid.

Examine the type of cylinder. Make sure you have the correct tools for the job.

You may require the following tools:

- *Proper **Seal Kit***
- *Rubber Mallet*
- *Screwdriver*
- *Punch*
- *Pliers*
- *Emery cloth*
- *Torque Wrench*

Types of Cylinders
(Wire Ring / Threaded Head)

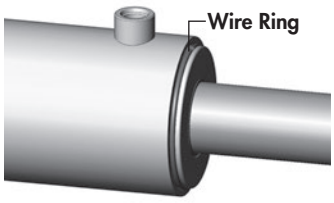

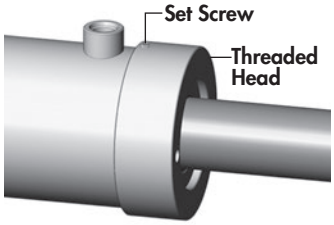

REPAIRING A WIRE RING CYLINDER

1. Retract the rod assembly.
2. Remove the external steel wire ring.

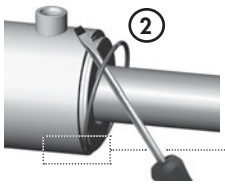

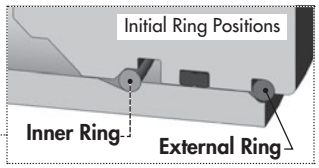

3. Remove any dirt that may have accumulated on the cylinder head.
4. Using the mallet and punch, push the head into the cylinder tube until the internal tube groove is fully exposed. This will also move the internal wire ring into its removal position.

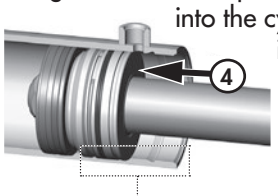



5. Take the plastic removal ring from the seal kit:
   a) Straighten the ring and remove any kinks or excessive curl to make installation easier and prevent it from falling out.
   b) Insert the removal ring into the internal groove with the feathered end pointing into the tube.

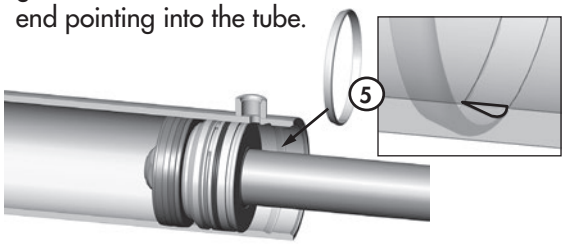

   c) Use a screwdriver or a finger to hold one end of the ring in the groove while fitting the other end of the ring into the groove. The tips should snap in together. Ensure it is secure and fully seated before the next step.

   IMPORTANT: It is important to e*nsure the removal ring is completely in the groove before pulling the rod out. If the ring sticks out it will get stuck between the head and tube.*

6. a) Extend the rod to pull head out of tube. If the rod does not pull out easily, push the head back in and ensure the ring is properly in the groove. Replace ring if necessary.

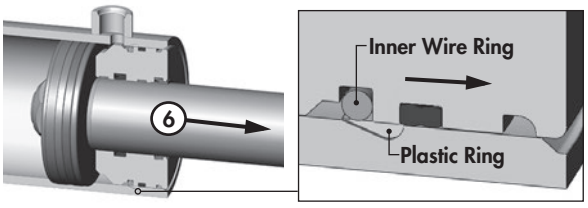

   Note: *Excessive force will not overcome a jammed ring and could damage the cylinder.*
   b) Completely remove rod and head from tube.

7. Remove plastic removal ring from the cylinder tube.

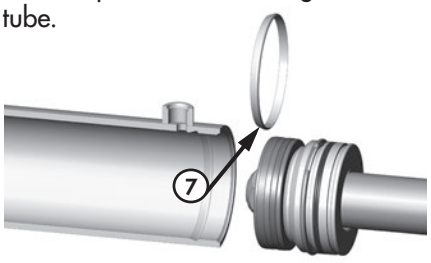

8. Remove locknut, piston and head from rod.

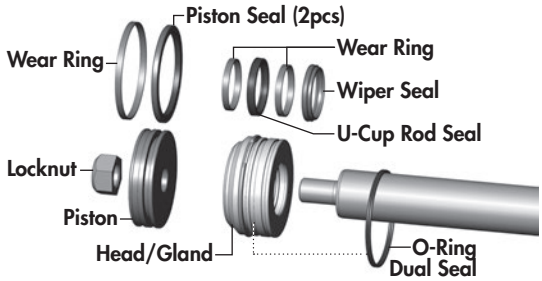

9. a) Inspect and replace all of the seals with new components.

   b) Inspect the inside of the cylinder barrel, piston, rod and other polished parts for burrs and scratches. Smooth areas as needed with an emery cloth.

   c) During re-assembly of head/gland assembly, leave the outer O-Ring Dual Seal loose on the rod to re-install at a later step.

10. Replace piston and torque the locknut to required value. (Refer to chart below)

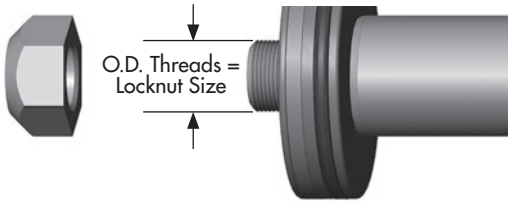

LOCKNUT SIZE (PISTON)	**TORQUE VALUE**
3/8 - 24 UNF	25-30 lb.ft (35-42 *N.m*)
1/2 - 20 UNF	**40-60 lb.ft *(55-80 N.m)***
5/8 - 18 UNF	95-105 lb.ft (130-140 *N.m*)
3/4 - 16 UNF	**175-225 lb.ft *(240-305 N.m)***
7/8 - 14 UNF	200-275 lb.ft (270-370 *N.m*)
1 - 14 UNF	**300-380 lb.ft *(405-515 N.m)***
1 1/8 - 12 UNF	400-500 lb.ft (540-675 *N.m*)
1 1/4 - 12 UNF	**500-600 lb.ft *(675-810 N.m)***
1 1/2 - 12 UNF	700-800 lb.ft (950-1085 *N.m*)
1 3/4 - 12 UNF	**800-900 lb.ft *(1085-1220 N.m)***

11. a) Install the supplied band clamp to compress the inner wire ring on the head/gland assembly so it will fit into the tube.

    Note: Make sure the cam of the band clamp is not overtop of the gap in the ring.

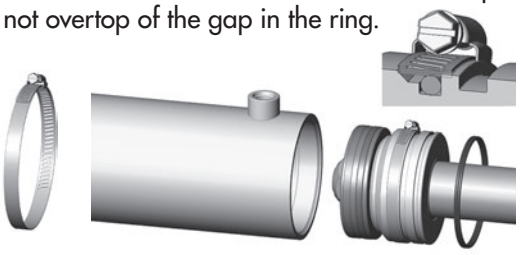

11. b) Tighten the band clamp to ensure the wire ring is fully seated. Then, loosen the clamp approx. 1/2 a turn to allow band clamp to slide during final assembly.

12. Lubricate the cylinder tube and piston seals.

13. Insert the piston into the tube. Tap the cylinder head into the tube until the clamp slides over and the inner wire ring is inside the tube.

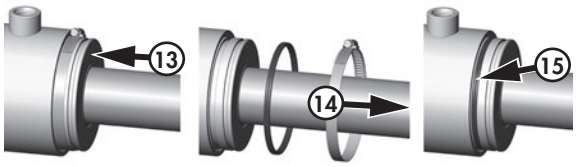

14. Loosen the clamp and remove.

15. Install the O-Ring Dual seal.

16. Tap the head the rest of the way until the end is flush with the tube.

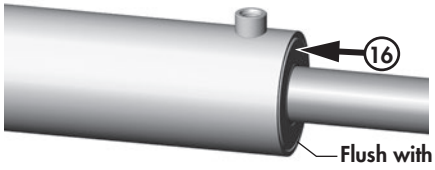

IMPORTANT: The head/gland must be inserted until it is flush with the tube to allow the inner wire ring to snap into its seated position in the internal cylinder groove. Failure to insert the head flush as shown will result in the head and rod assembly coming out of the tube when pressure is applied to the cylinder.

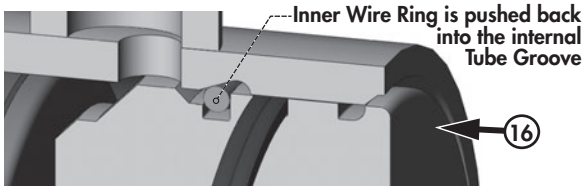

17. Pull the rod out to expose the external wire ring groove in cylinder head, and then install the external ring.

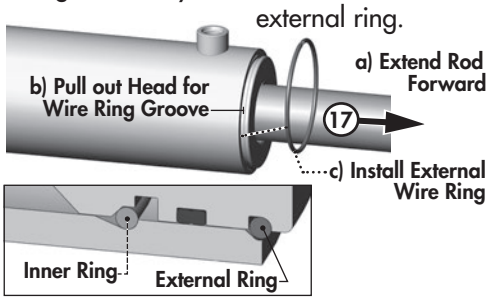

18. Before using the cylinder, ensure that you double check your work.

REPAIRING A THREADED HEAD CYLINDER

Set Screw Style

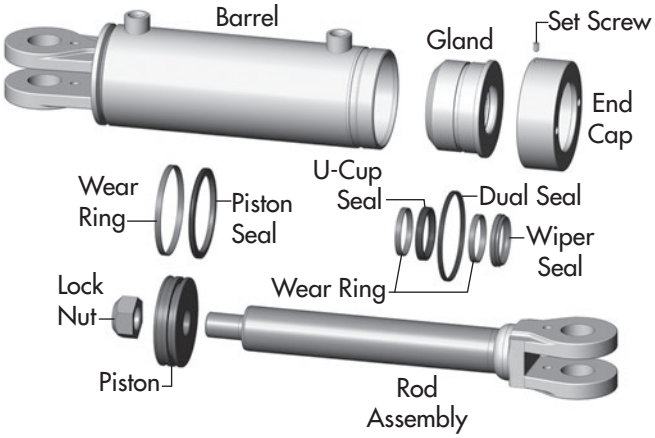

DISASSEMBLY

1. Loosen Set Screw and turn off end cap.
2. Carefully remove piston/rod/gland assemblies.
3. Disassemble the piston from the rod assembly by removing lock nut.

NOTE: *DO NOT* clamp rod by chrome surface.

4. Slide off gland assembly & end cap.
5. Remove seals and inspect all parts for damage.
6. Install new seals and replace damaged parts with new components.
7. Inspect the inside of the cylinder barrel, piston, rod and other polished parts for burrs and scratches. Smooth areas as needed with an emery cloth.

REASSEMBLY

1. Reinstall rod through end cap & gland assembly.
2. Secure piston to rod with lock nut. Torque lock nut to proper value (refer to chart on previous page for proper torque value).
3. Lube inside of barrel, piston seals, and gland seals with hydraulic oil.
4. With cylinder body held gently in a vise, insert piston, gland, end cap and rod combination using a slight rocking motion.
5. Apply Loctite anti-seize before installing cylinder end cap.
6. Torque cylinder end cap to 440 lb.ft (600 N.m).
7. Tighten Set Screw on end cap to 6 lb.ft (8 N.m).

TINE REPLACEMENT

Note: *Tines **must** be replaced when worn down to 16 in. or less in length. Tines may be replaced while the machine is in transport position, or field position.*

NOTE: *Avoid replacing one tine at a time, unless wear is minimal. Tines should be replaced all at once whenever possible so there is even wear to all the tines. In some instances, (raking operations) the front row of tines will wear sooner. If this is the case, replace the front row. Check that wear is minimal on the other tines.*

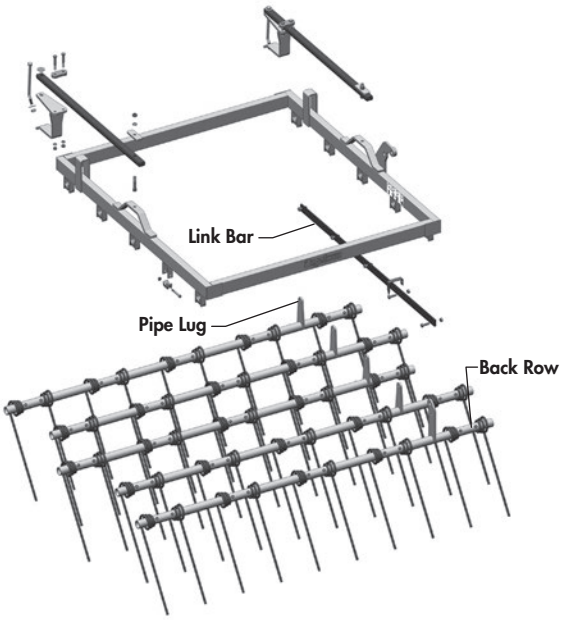

DISASSEMBLY:

Follow this procedure one pipe row at a time so pipes do not get mixed up, or number each pipe before disassembly.



1. Remove the bolt from the link bar to pipe lug, so pipe will rotate freely.
2. Remove the pin from the back end of the jack if the back row is being replaced. *(Not Shown)*

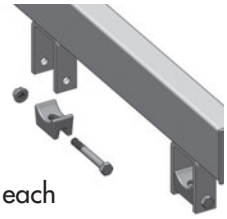

3. Remove the bolts and spacer from the bracket on the sides of the frame. The row will drop out.
4. Remove the bolts holding the tines on the pipe. (Starting at each end and working in)



5. Slide the tines off the pipe.

ASSEMBLY:

1. Slide the tines onto the pipe. (Make sure all tines are installed facing the same direction)
2. Position tines centred over bolt holes as shown in the diagram. Install bolts and nuts.
3. Position pipe between the brackets on the sides of the frame, with the lug on the outside of the frame. Install the spacer and bolt, secure with locknut. Ensure pipe turns freely when tightening.

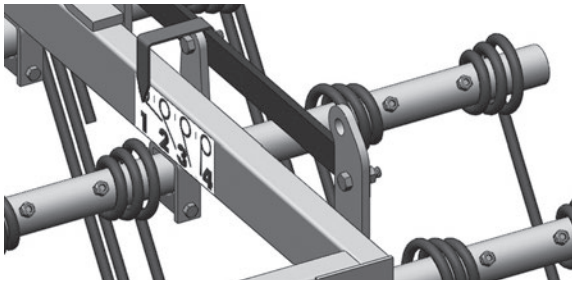

4. Line up hole on lug with hole on link bar, install bolt and secure with nut.
5. Back row: Install pin through the jack and lug. Secure with hair clip. *(Not Shown)*
6. See the adjustments section and adjust as required.

WHEEL HUB REPAIR

⚠ **IMPORTANT:** *Be sure to block up unit securely before removing tires.*

COMMON WHEEL AND HUB COMPONENTS

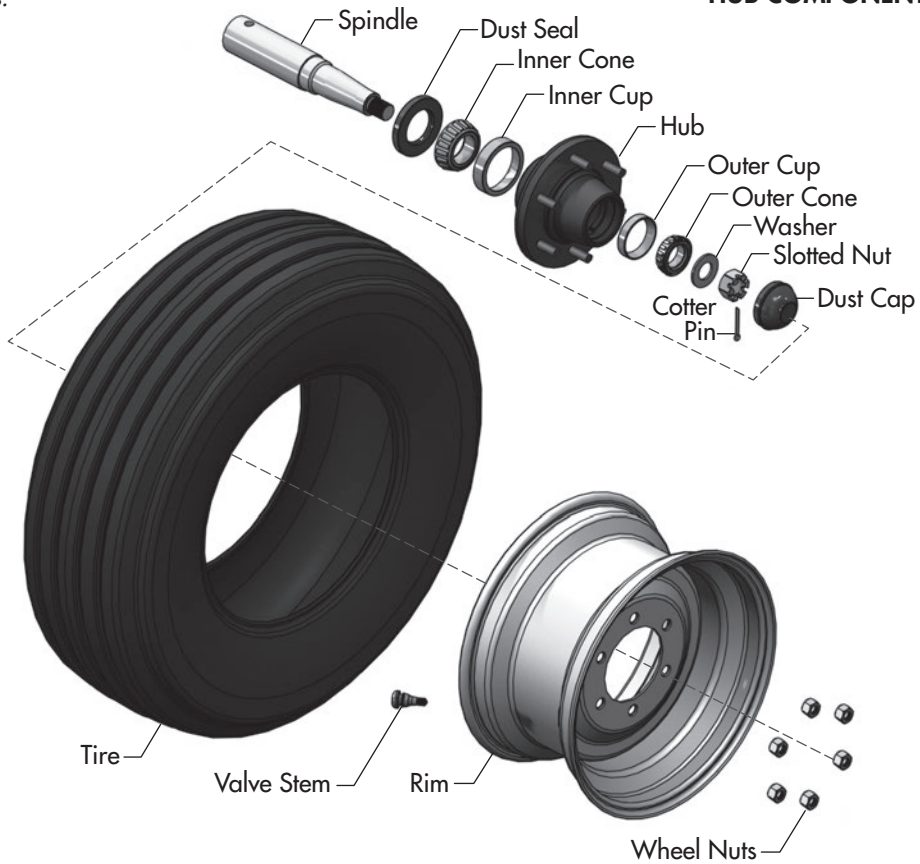

DISASSEMBLY

1. Carefully pry off dust cap.
2. Remove cotter pin from nut.
3. Remove nut and washer.
4. Pull hub off spindle.
5. Dislodge the inner cone bearing and dust seal.
6. Inspect cups that are press fitted into hub for pits or corrosion and remove if necessary.
7. Inspect and replace defective parts with new ones.

ASSEMBLY

1. If cups need replacing, be careful to install them gently and evenly into hub until they are fully seated.
2. Apply a thick wall of grease inside hub. Pack grease in cones.
3. Install dust seal as illustrated, and inner cone.
4. Position hub onto spindle and fill surrounding cavity with grease.
5. Assemble outer cone, washer and nut.
6. Tighten nut while rotating hub until there is a slight drag.
7. Turn nut back approximately 1/4 turn to align cotter pin hole with notches on nut. Note: Hub should rotate freely. If not, repeat step 6.
8. Install cotter pin and bend legs sideways over nut.
9. Fill dust cap half full of grease and gently tap into position.
10. Pump grease into hub through grease fitting until lubricant can be seen from dust seal.

WHEEL NUT / BOLT TORQUE

1. The Recommended 9/16 wheel nut/bolt torque for this implement is 120-130 lb.ft (165-175 N.m)
2. When attaching the wheel, tighten to this specifications. Check again after approximately 500 revolutions and re-tighten as required.
3. Check wheel bolts twice annually to ensure proper bolt torque.

CHECK TIRE PRESSURE

Cart/Trailer Tires:

16.5L x16.1 - 6 PLY	**48 PSI** (330 kPa)

Endwheel & Transport Tires: *(Check Tire for Size)*

9.5L x15 - 8 PLY	**60 PSI** (414 kPa)
11L x15 - 12 PLY	**90 PSI** (620 kPa)
12.5L x15 - 12 PLY	**90 PSI** (620 kPa)

TROUBLESHOOTING

In the following section, we have listed some of the problems, causes and solutions that you may encounter. If you encounter a problem that is difficult to solve, even after having read through this troubleshooting section, please call your local dealer or distributor. Before you call, have this manual and the serial number from your unit ready.

PROBLEM	CAUSE	SOLUTION
Hydraulics creep down during operation.	Tractor hydraulic leak.	To verify, raise sections half way up, disconnect at tractor. Observe if sections creeps down. If not repair tractor hydraulics.
	Damaged hose or loose fittings.	Search for leaks with a piece of paper (not by hand). Repair as necessary.
	Hydraulic cylinder leak.	Replace seals or damaged components.
Harrow sections raise too slowly.	Hydraulic pressure from tractor too low.	Check pressure, should be 2500 psi.
	Restriction in hose.	Disconnect & blow out lines with compressed air.
	External hydraulic leak.	Repair as needed.
Oil accumulation on cylinder shaft.	Hydraulic cylinder leak.	Replace seals or damaged components.
	Oil bypassing seals.	Seal manufacturer advises that small amounts of oil getting past seals is desirable. If problem becomes excessive, replace seals.
Auto-Fold latch will not close for field position.	Latch holder has slid back on trailer frame.	With machine in field position and sections raised up adjust latch holder in slotted bolt holes to meet the swing arm pipe.
Auto-Fold latch will not open for transport position.	Cable slack or broken.	Tighten or replace.
Machine won't unfold fast enough.	Transport wheel might be in transport position.	Switch transport wheel over to field position by rotating the bent spindle until the wheel is leaning out.
Auto-Fold unlatches prematurely.	The latch is too loose on the swing arm pipe.	Latch holder has moved forward on the trailer frame. Move it back.
Unsynchronized or delayed lifting/lowering.	Accumulated air entrapped in rephasing cylinder circuit.	Follow procedure to cycle and hold cylinders extended for a minimum of 30-40 seconds (5 times) as described in the "Rephasing the Cylinder Circuit" section of the manual.
Difficult to rotate the Transport Wheel bent axles for transport.	Too much weight on the holder making it difficult to turn.	When raising the harrow sections for transport, rotate the beams until the transport tires almost touch the ground. Rotate and secure the transport wheels into transport position. Then continue the procedure, putting the machine into transport.

General Overview

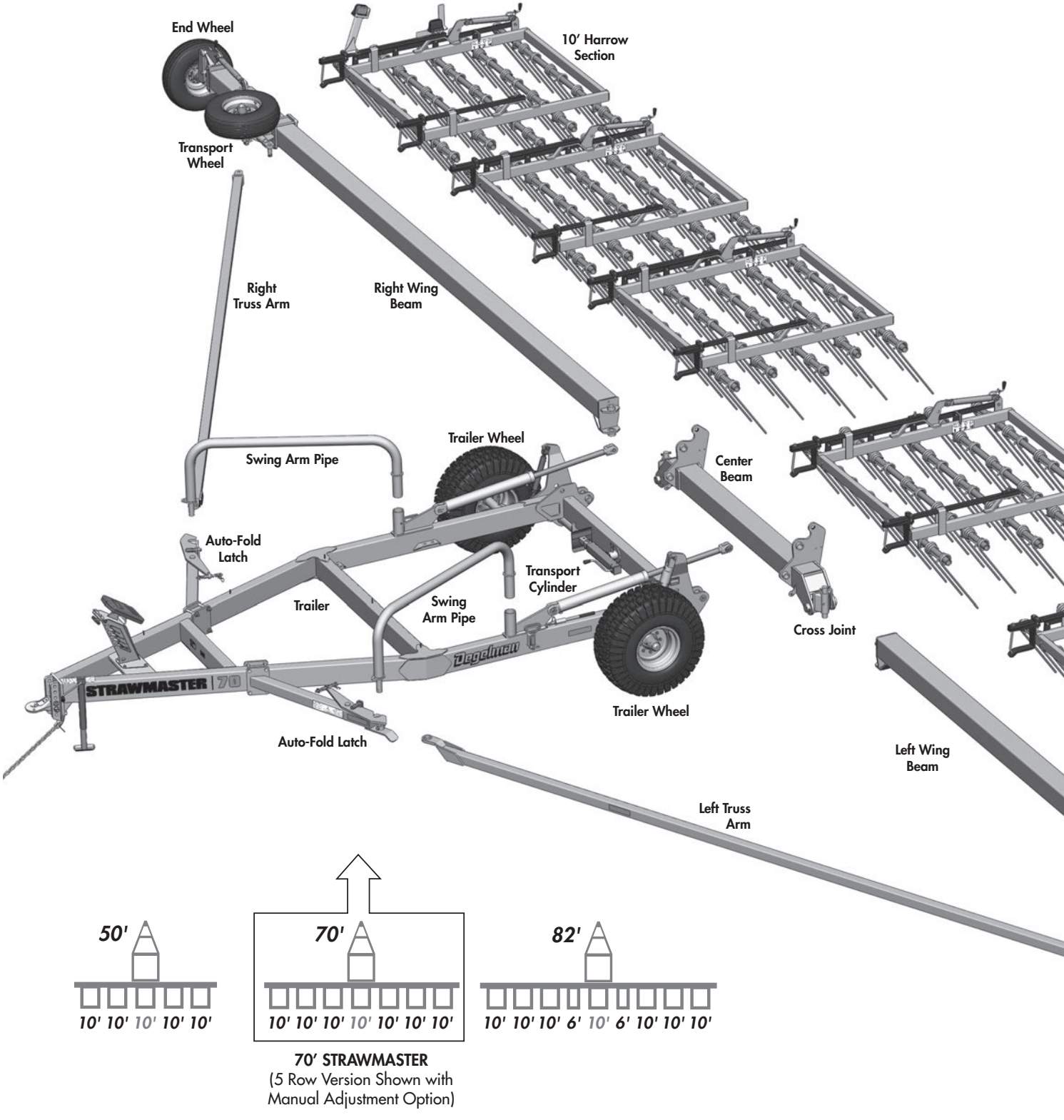

70' STRAWMASTER
(5 Row Version Shown with Manual Adjustment Option)

STRAWMASTER | 50 | 70 | 82

Parts Section - Table of Contents

NOTE: Strawmaster trailer height & tine angle adjustment is available with manual adjustment (standard) or hydraulic adjustment (optional). Hydraulic Transport is standard on all models.

***PARTS SECTION* - TABLE OF CONTENTS**

General Overview	***22-23***
Wing Beam & Truss Arms	*24*
Trailer Components & Transport Cylinder	*25-26*
Auto-Fold Latch Components	*27*
Trailer Wheel Components & Cylinder	*28*
Center Beam Joint Components	*29*
Transport Wheel & Truss Arm Brackets	*30*
Transport Wheel Components	*31*
End Wheel Components & Cylinder	*32-33*
Harrow Sections & Components	*34-38*
Rephasing Cylinder Components	*39*
Optional Accessories - Valmar Platform	*39*
Transport Cylinder Hydraulic Routing	*40*
Wheel Cylinders Hydraulic Routing (Optional)	*41*
Tine Angle Rephasing Hydraulics (Optional)	*42*
Electrical Components & Routing	*44*
Warranty	***45***

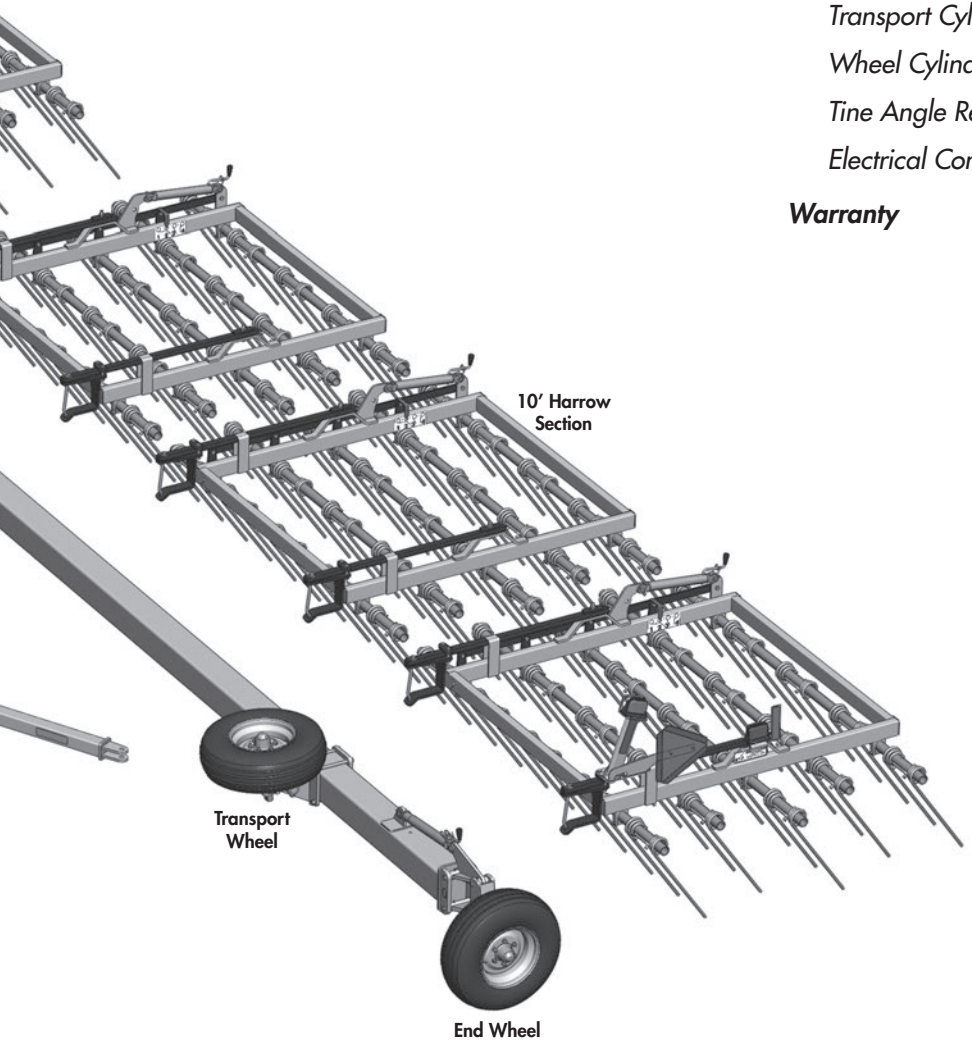

⚠ IMPORTANT:



READ MANUAL

Wing Beams & Truss Arms

WING BEAMS (Model Specific)

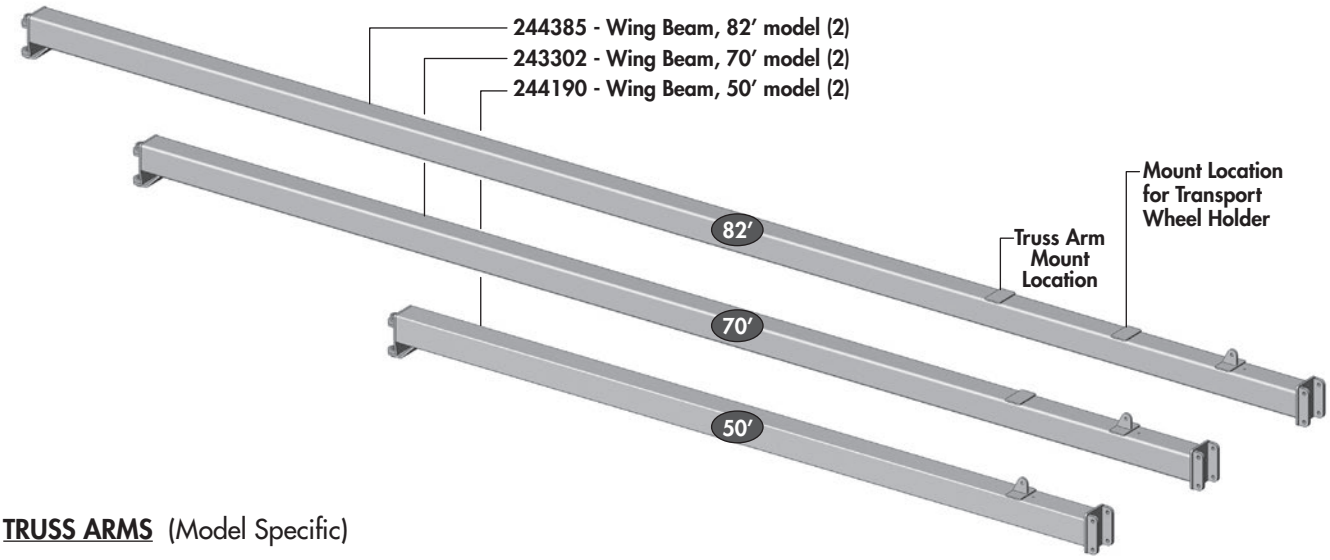

TRUSS ARMS (Model Specific)

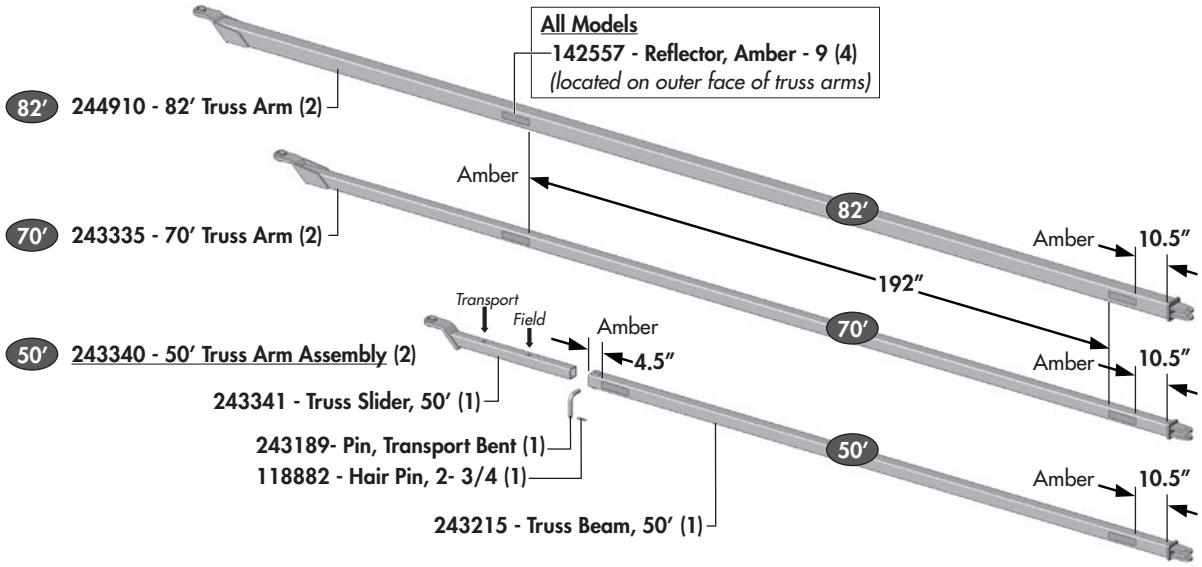

Trailer Components

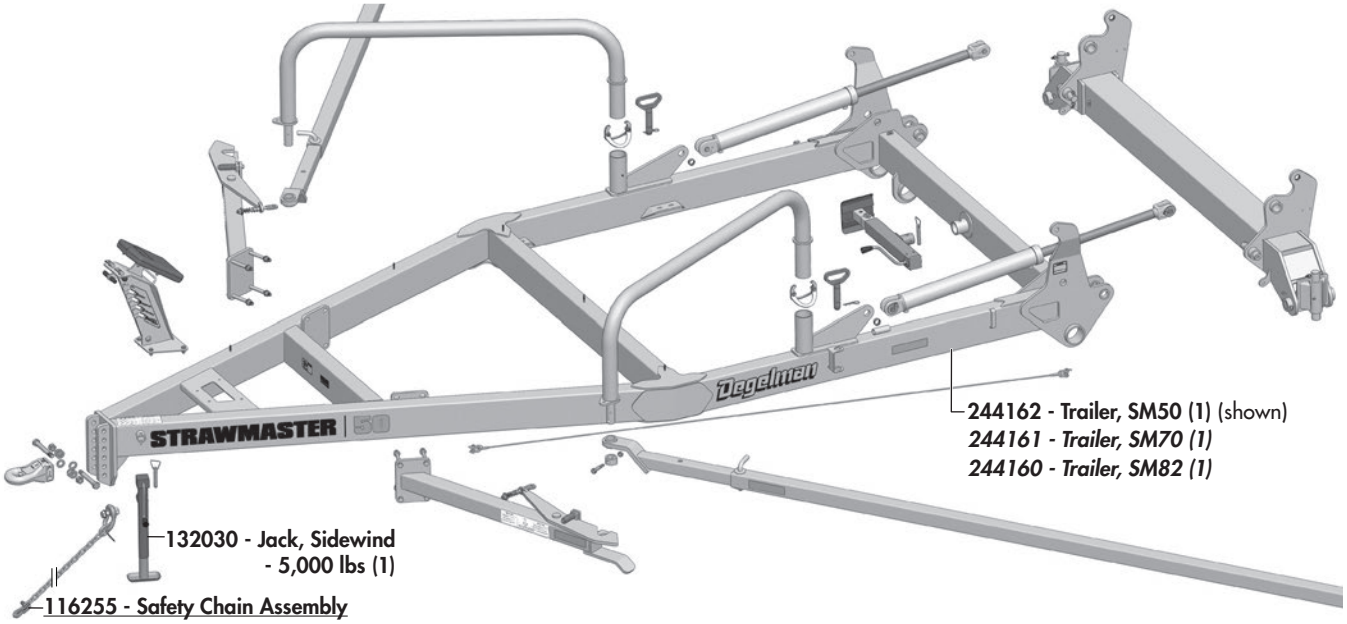

FRONT TRAILER HITCH COMPONENTS

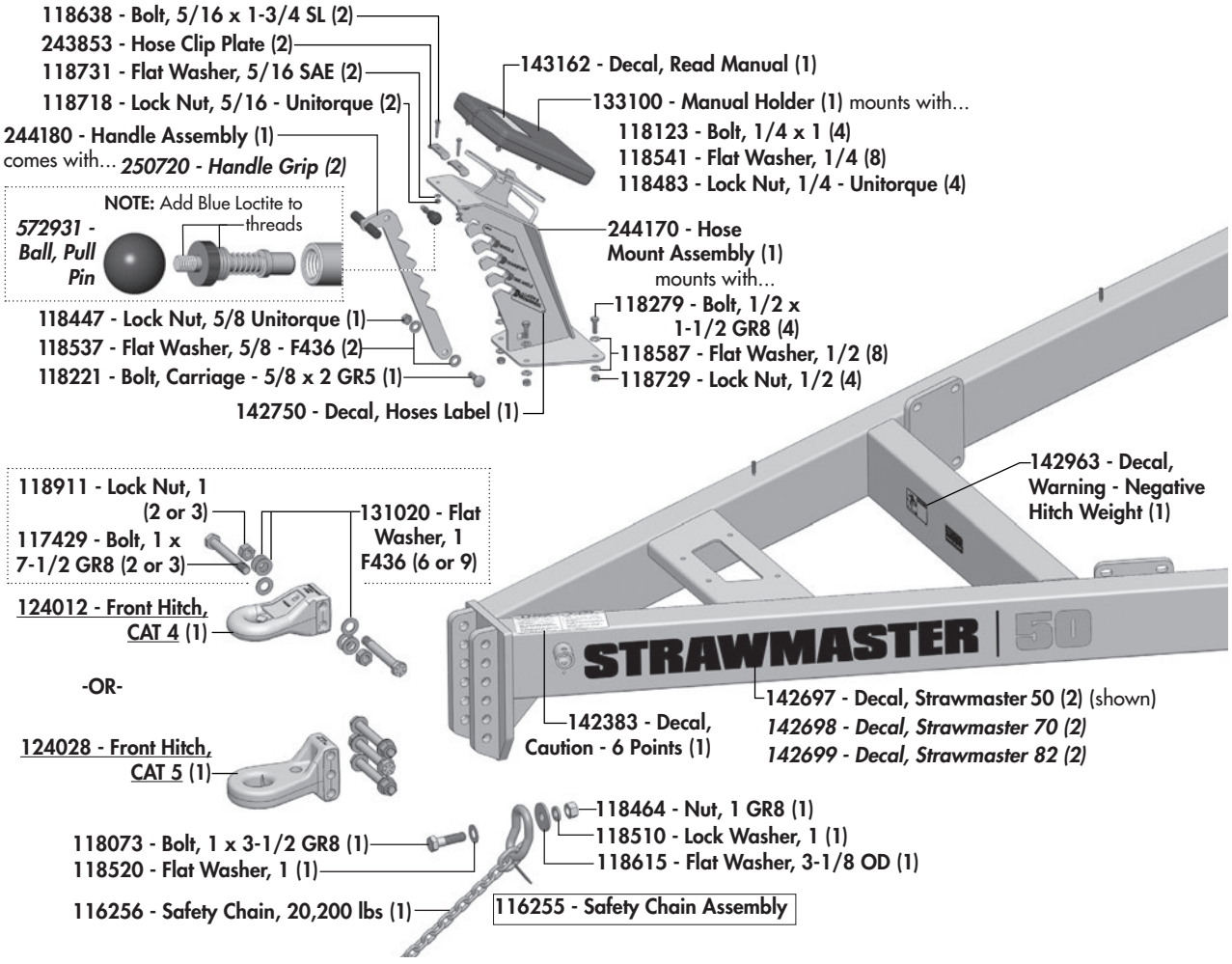

Trailer Components & Transport Cylinder

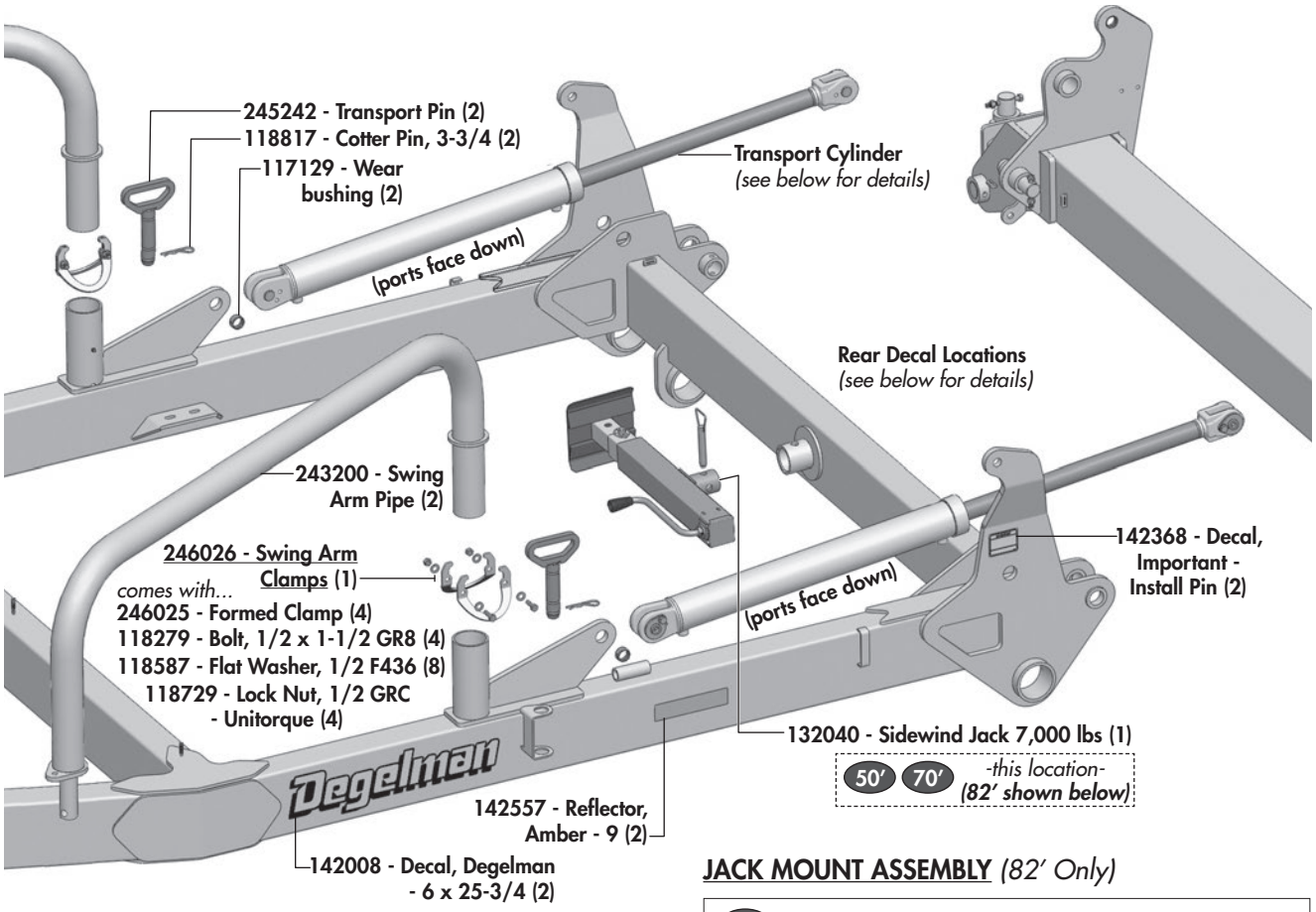

TRANSPORT CYLINDER OVERVIEW

All Models
123240 - Cylinder, 4 x 31 x 2
123049 - Seal Kit (1)

(Previous)
All Models Except *(7 Row - 70′ & 82′)*
123090 - Cylinder, 3-1/2 x 31 x 2
123091 - Seal Kit (1)

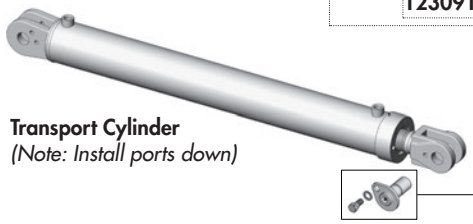

Transport Cylinder
(Note: Install ports down)

Mounting will require:
122755 - Pin, 1-1/4 x 2-13/16 (2)
118924 - Flat Washer, .59 ID x .9 OD (2)
118796 - Bolt, 1/2 GR8 UNC (2)

JACK MOUNT ASSEMBLY *(82′ Only)*

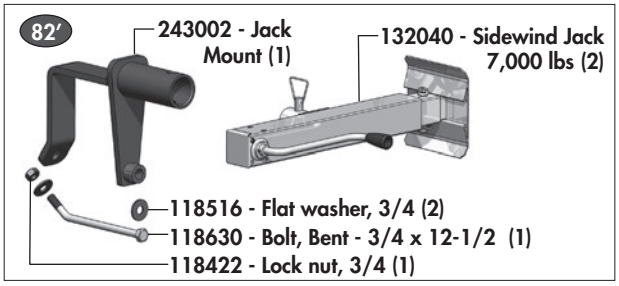

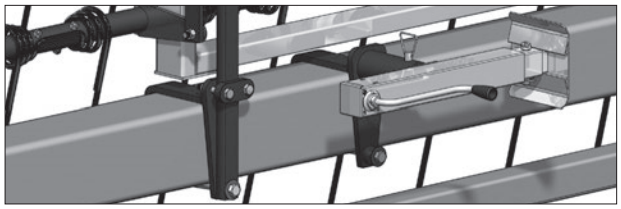

REAR TRAILER/CENTER BEAM DECAL LOCATIONS

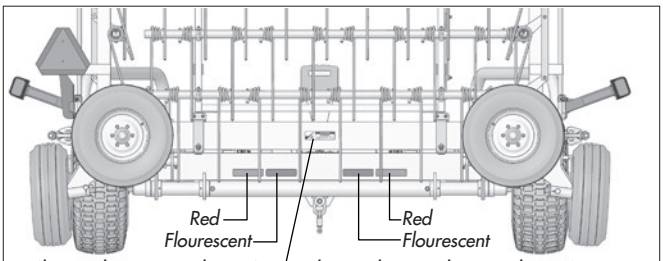

(located on center beam)
142696 - Decal, Danger - Falling Wing (1)

(located on trailer rear beam)
142556 - Reflector, Red - 9 (2)
142650 - Reflector, Fluorescent - 9 (2)

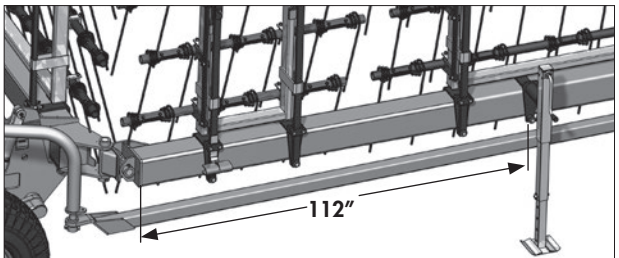

NOTE: Jack mount assembly *must* be installed **before** installing the harrow sections.

Auto-Fold Latch

- Insert the swing arm pipe into socket.
- Rotate the pipe forward so it connects with the centre of the slot on the latch.
- You might have to move the latch arm back & forth in the slotted bolt holes to align.
- The swing arm should strike the ramp plate of the latch holder at least half way up. If it doesn't hit the ramp at the proper point pull it up with an overhead crane and check it again.

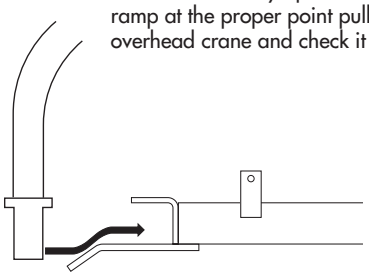

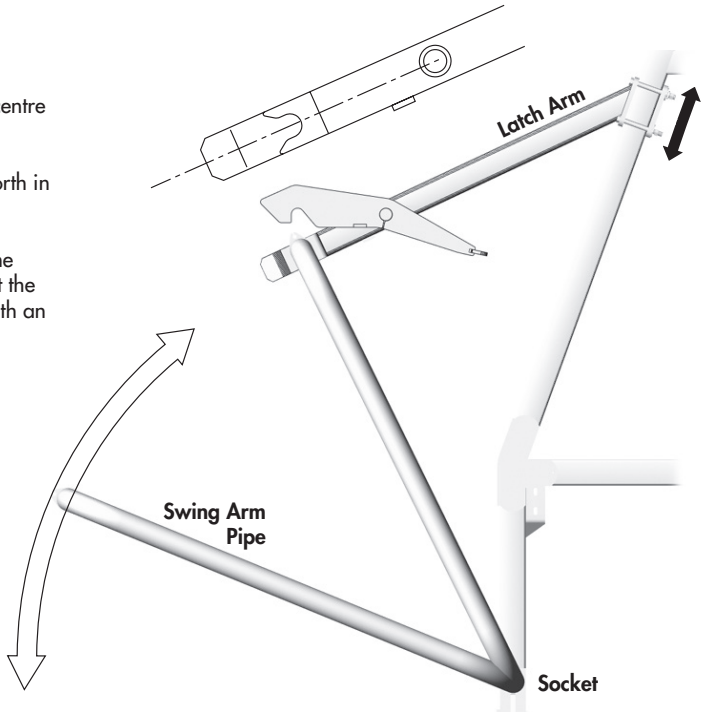

AUTO-FOLD LATCH COMPONENTS *(Left Side Shown)*

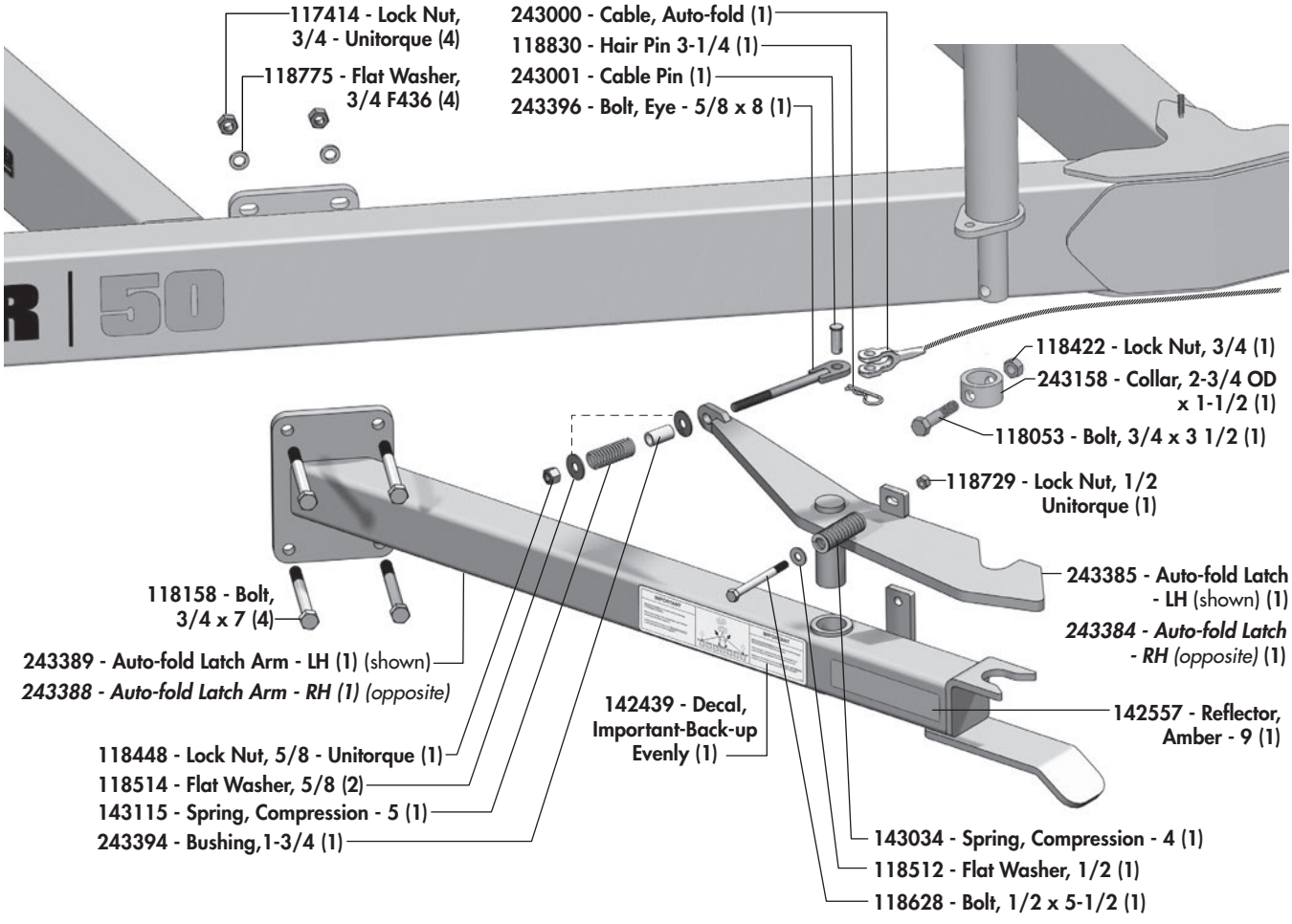

Trailer Wheel Components & Cylinder

TRAILER WHEEL COMPONENTS
(Left Side Shown)

NOTE: Strawmaster® can have either **manual** or **hydraulic** adjustment. Trailer height & tine angle can be set by ratchet jacks or hydraulics.

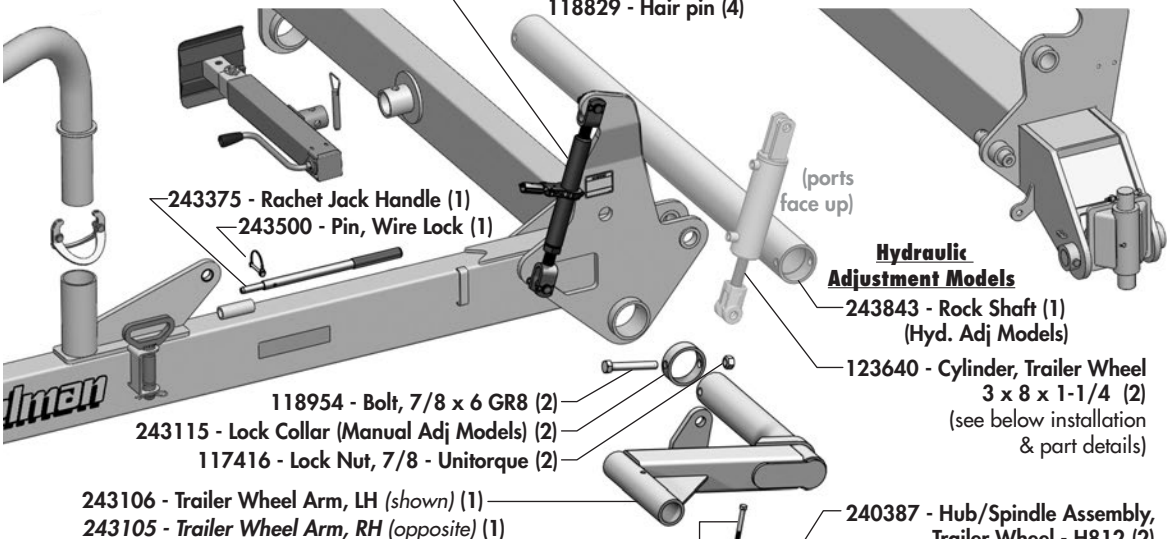

Manual Adjustment Models
- 132016 - Ratchet jack (2)
- c/w 132032 - Pin, 2-1/8 lg (2)
- 118829 - Hair pin (4)
- 243375 - Rachet Jack Handle (1)
- 243500 - Pin, Wire Lock (1)

(ports face up)

Hydraulic Adjustment Models
- 243843 - Rock Shaft (1) (Hyd. Adj Models)
- 123640 - Cylinder, Trailer Wheel 3 x 8 x 1-1/4 (2) (see below installation & part details)
- 118954 - Bolt, 7/8 x 6 GR8 (2)
- 243115 - Lock Collar (Manual Adj Models) (2)
- 117416 - Lock Nut, 7/8 - Unitorque (2)
- 243106 - Trailer Wheel Arm, LH *(shown)* (1)
- ***243105 - Trailer Wheel Arm, RH*** *(opposite)* (1)
- 240387 - Hub/Spindle Assembly, Trailer Wheel - H812 (2) *(see detail)*
- 118126 - Bolt 1/2 x 4 (2)
- 118729 - Lock Nut, 1/2 - Unitorque (2)
- 131511 - Trailer Wheel LH Assy (1)
- ***131513 - Trailer Wheel RH Assy (1)***
- 131501 - Tire 16.5L x 16.1 x 6 Ply (1)
- 131502 - Rim - W14C - 16.1 (1)
- 127006 - Valve Stem TR415 (1)

TIRE PRESSURE
Cart/Trailer Tires:
16.5L x16.1 - 6 PLY
48 PSI (330 kPa)

Torque, 9/16 Wheel Nut:
120-130 lb.ft (165-175 N.m)

- 131709 - Wheel Nut, 9/16 x 18 UNF (16)

TRAILER WHEEL CYLINDER
123640 - Monarch - 3 x 8 x 1-1/4

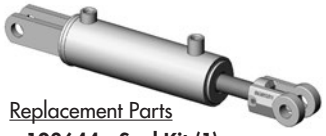

Replacement Parts
- 123644 - Seal Kit (1)
- 123641 - Cyl Pins Kit (1)

TRAILER WHEEL CYLINDER - SPACER WASHERS

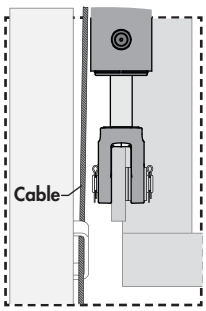

IMPORTANT:
Flat Washers (6) are included with the hydraulic cylinder pins to space the cylinder & pins away from the auto-fold cable. Two on the inside of the clevis, and one outer. **(3 Top & 3 Bottom)**

131020 - Flat Washer, 1 - F436 (6)

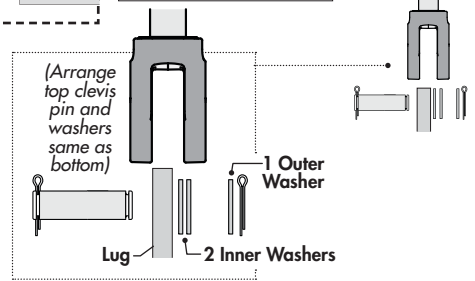

OPTIONAL LARGE WHEEL: Tire/Hub Spindle Assembly

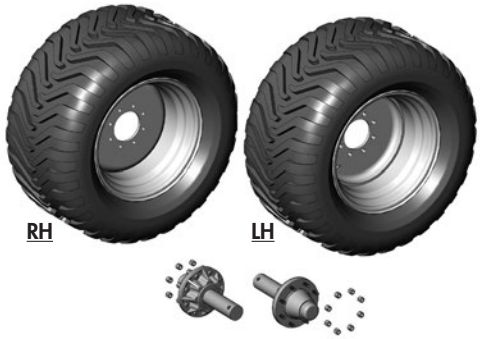

- 131861 - Wheel, LH Assembly (1)
- ***131860 - Wheel, RH Assembly (1)***

comes with...
- ***131862 - Tire 550/45-22.5 (1)***
- ***131863 - Rim, 22.5 x 16 8H (1)***
- ***127015 - Valve Stem TR618A (1)***

Tire Pressure 41 PSI (283 kPa)

- 131735 - Hub/Spindle Assembly (2)
- 131776 - Wheel Nut, 5/8 -18 UNF (16)

Torque, 5/8 Wheel Nut:
185-190 lb.ft (250-260 N.m)

Trailer Wheel Spindle & Center Beam Joint

240387 - HUB/SPINDLE ASSEMBLY

(Trailer Wheel - H812)

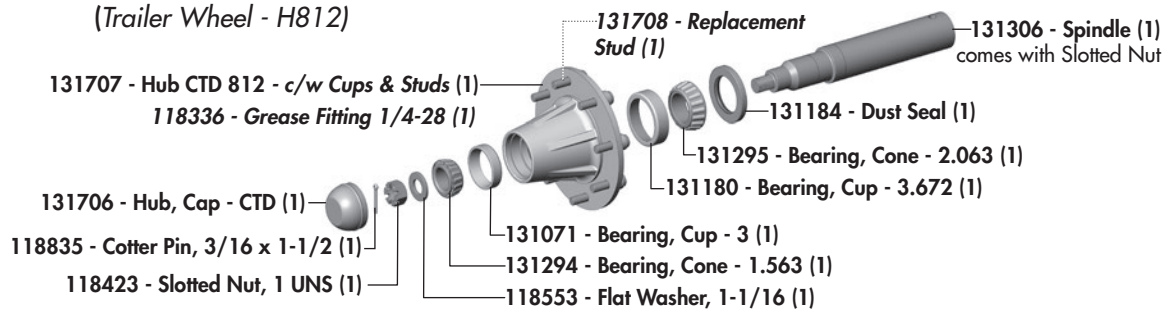

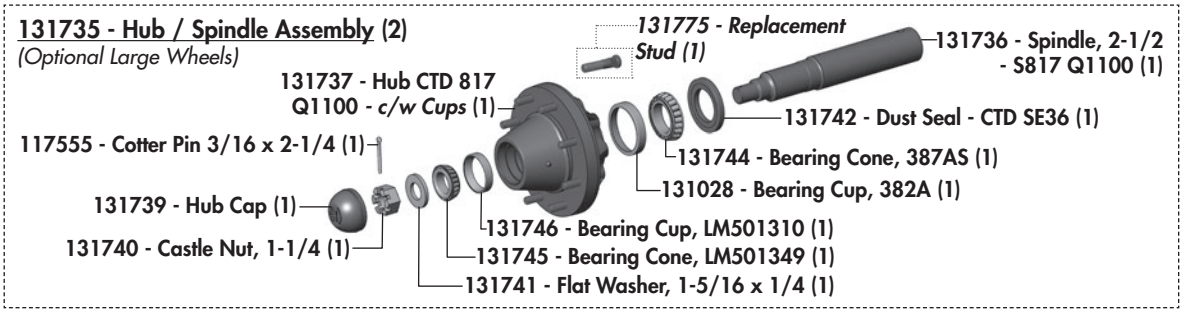

CENTER BEAM JOINT COMPONENTS *(Left Side Shown)*

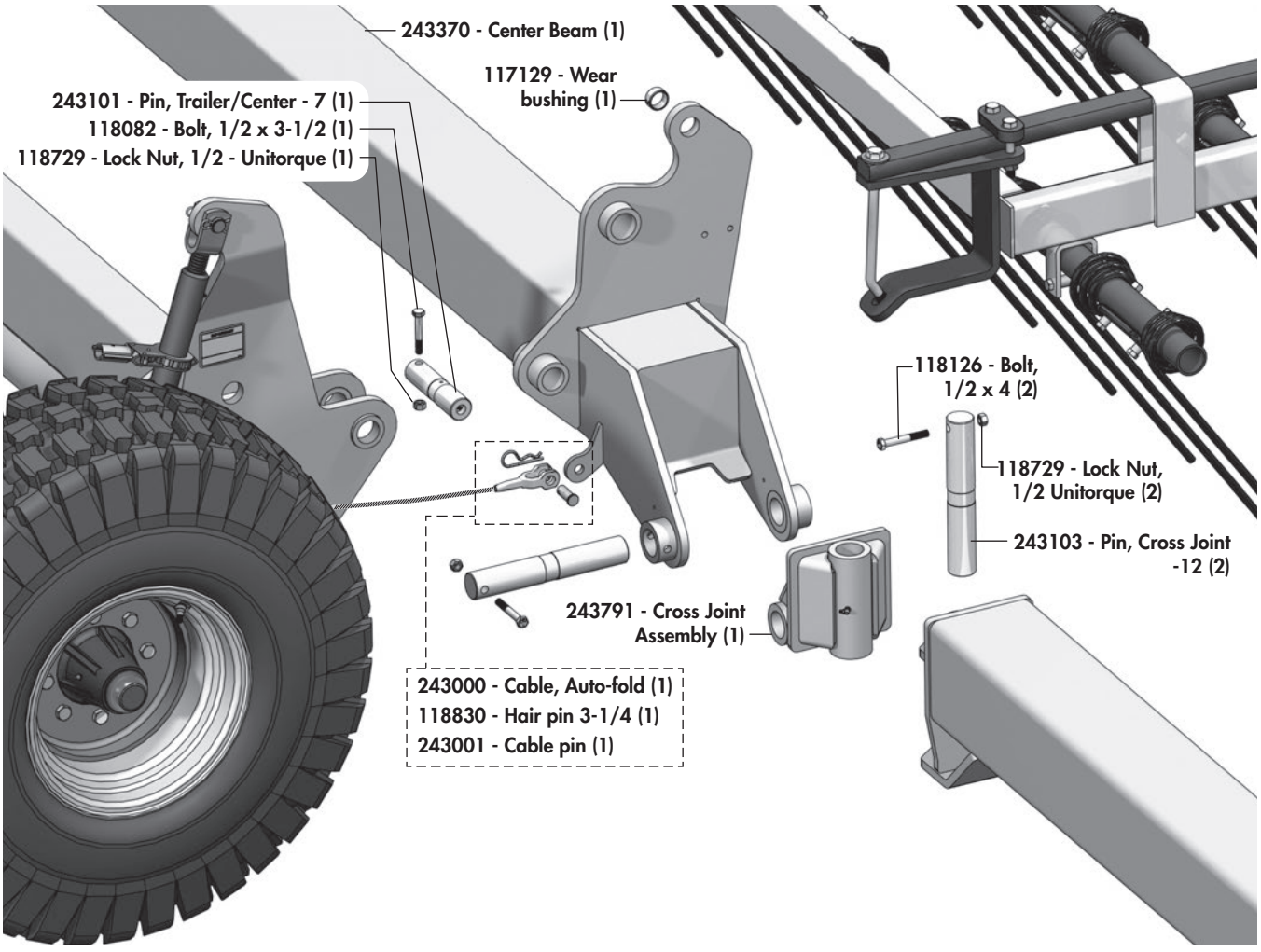

Transport Wheel & Truss Arm Brackets

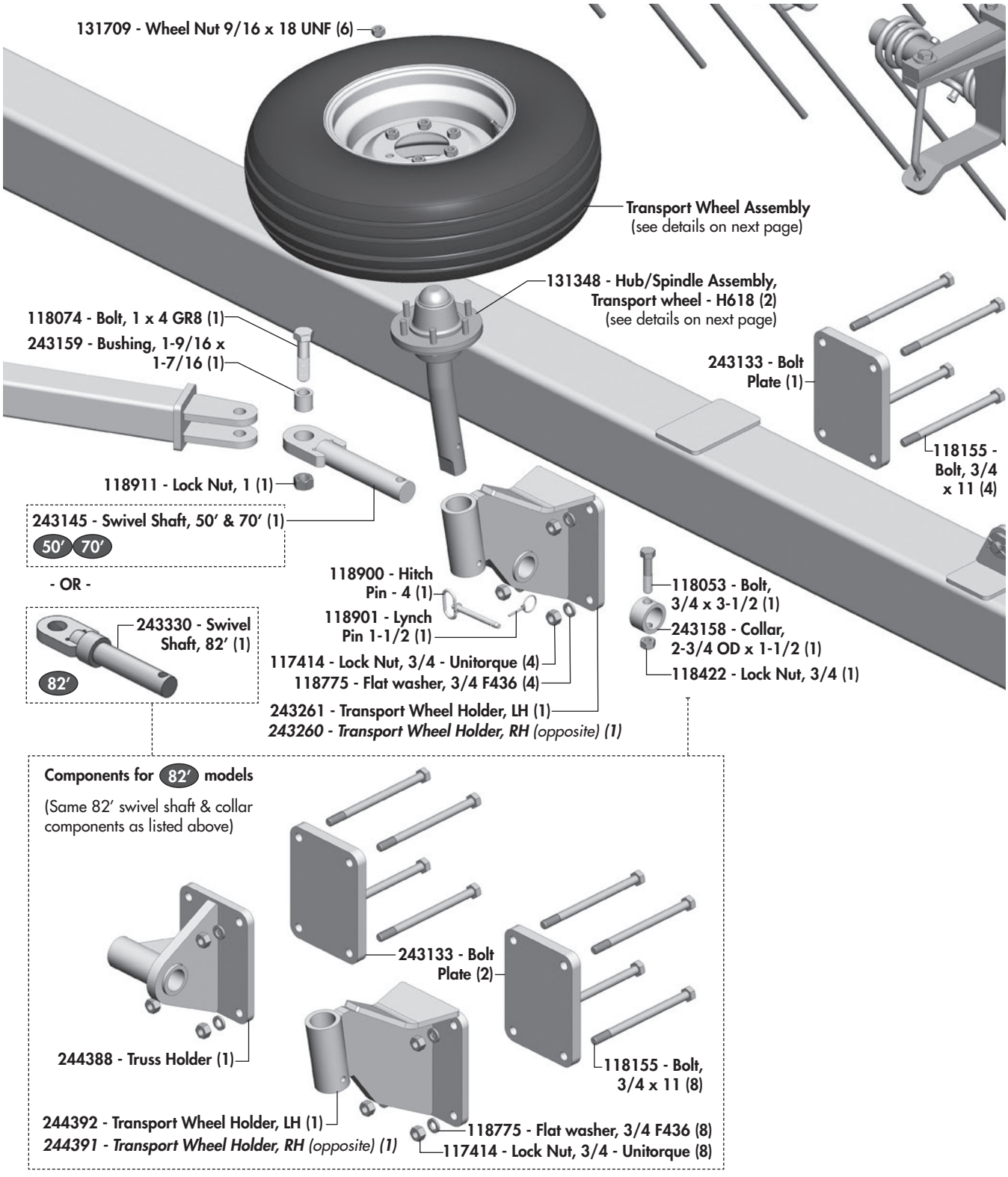

Transport Wheel Components

TRANSPORT WHEEL ASSEMBLY

50′ 70′ 82′

131515 - Transport Wheel Assembly (2)
c/w....
127018 - Tire, 12.5L x 15 FI - 12 PLY (1)
131328 - Rim, 6 Bolt - 15 x 10 (1)
127016 - Valve Stem - TR416 (1)

Tire Pressure
12.5L x15 -12 PLY:
90 PSI (620 kPa)

50′ *(Previously used)*
131600 - Transport Wheel Assembly (2)
c/w....
131601 - Tire, 11L x 15 FI - 12 PLY (1)
131001 - Rim, 6 Bolt - 15 (1)
127016 - Valve Stem - TR416 (1)

Tire Pressure
11L x15 -12 PLY:
90 PSI (620 kPa)

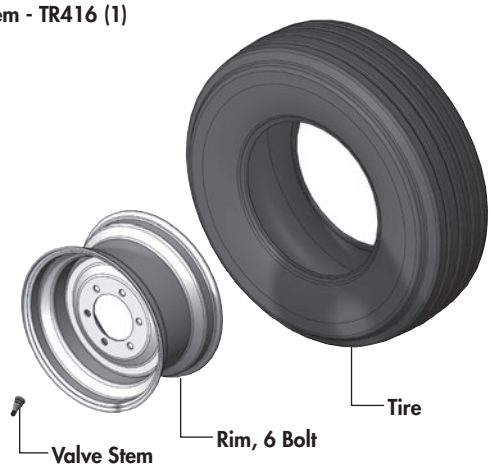

TRANSPORT WHEEL HUB/SPINDLE ASSEMBLY

131348 - Hub/Spindle Assembly, Transport wheel - H618

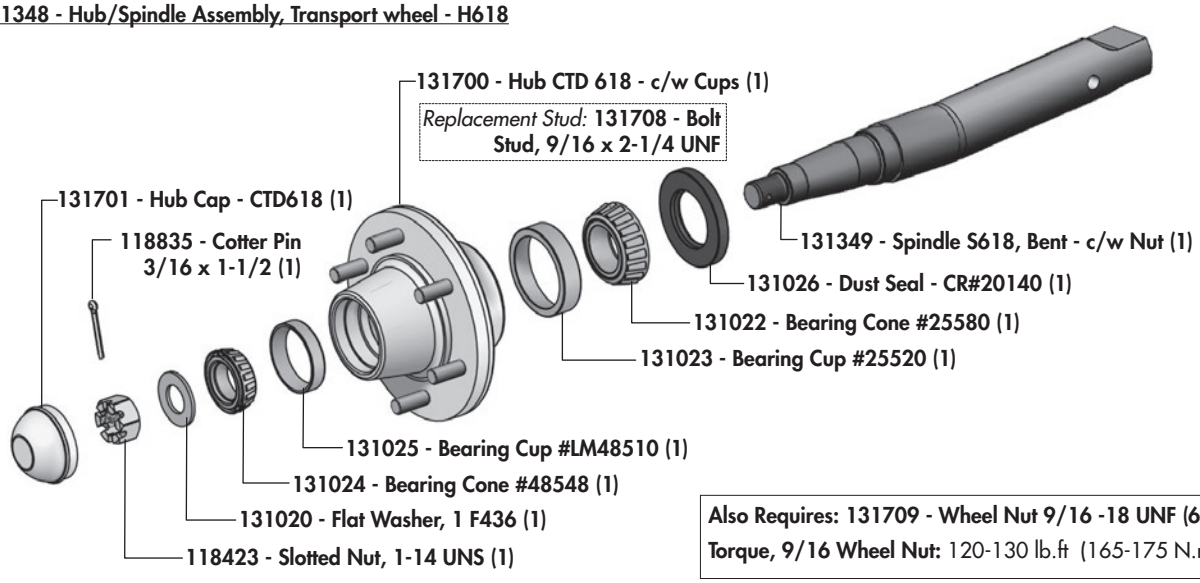

Also Requires: 131709 - Wheel Nut 9/16 -18 UNF (6)
Torque, 9/16 Wheel Nut: 120-130 lb.ft (165-175 N.m)

End Wheel Assembly Components

END WHEEL ASSEMBLY *(Left Side Shown)*

NOTE: Strawmaster can have either manual or hydraulic adjustment. Trailer height & tine angle can be set by manual jacks or hydraulics.

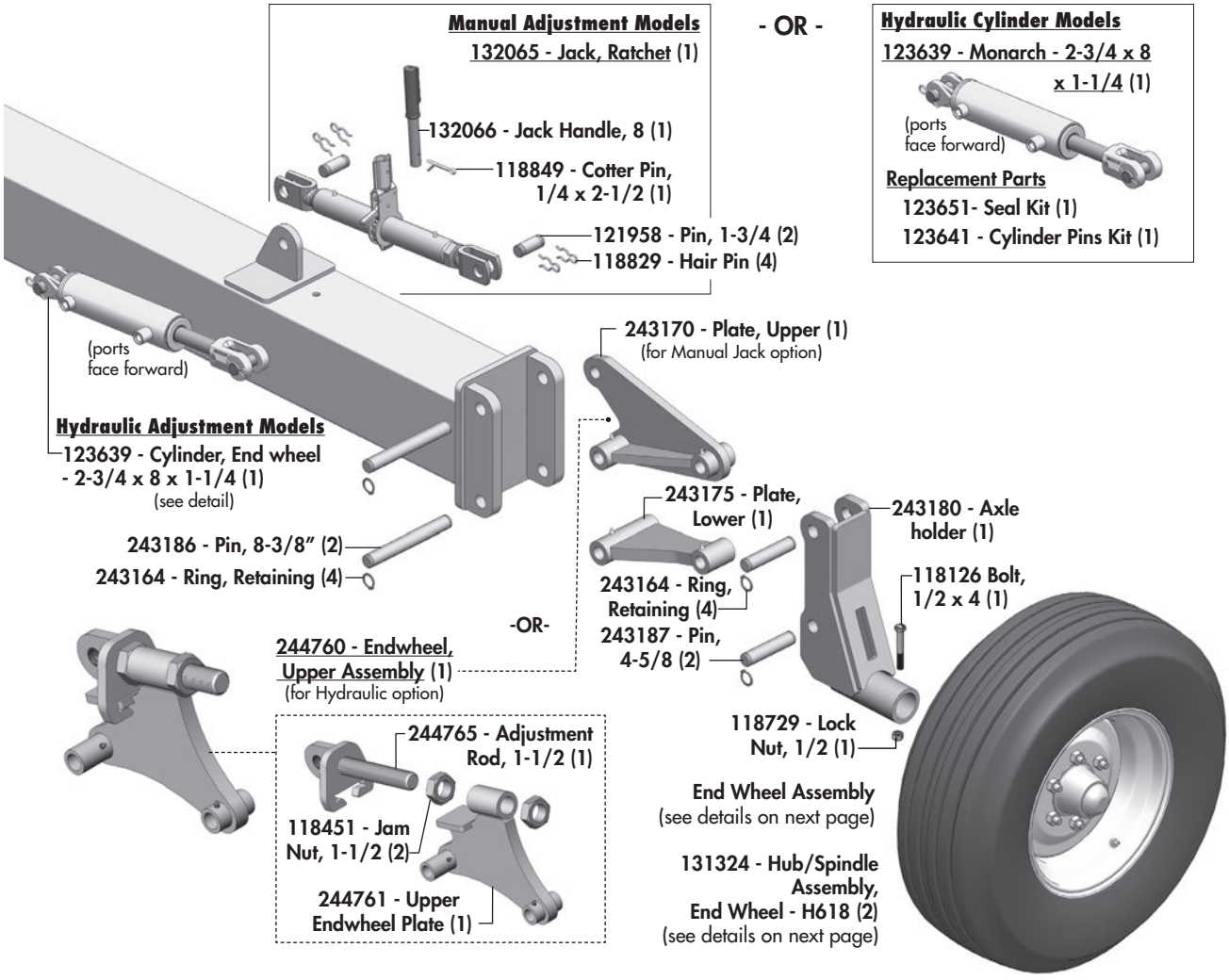

End Wheel Components

END WHEEL ASSEMBLY

50' 70' 82'

131515 - End Wheel Assembly (2)
c/w....
127018 - Tire, 12.5L x 15 FI - 12 PLY (1)
131328 - Rim, 6 Bolt - 15 x 10 (1)
127016 - Valve Stem - TR416 (1)

Tire Pressure
12.5L x15 -12 PLY:
90 PSI (620 kPa)

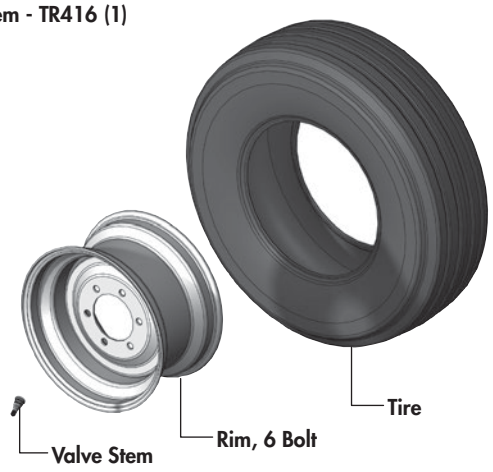

50' *(Previously used)*
131600 - End Wheel Assembly (2)
c/w....
131601 - Tire, 11L x 15 FI - 12 PLY (1)
131001 - Rim, 6 Bolt - 15 (1)
127016 - Valve Stem - TR416 (1)

Tire Pressure
11L x15 -12 PLY:
90 PSI (620 kPa)

END WHEEL HUB/SPINDLE ASSEMBLY

131324 - Hub/Spindle Assembly, End Wheel - H618

131700 - Hub, c/w Cups (1)
(Replacement Parts)
131708 - Stud, Wheel - CTD618 (1)
131416 - Stud, Wheel - ADR (1)

131701 - Hub Cap - CTD618 (1)
131414 - Hub Cap - ADR (1)

118835 - Cotter Pin
3/16 x 1-1/2 (1)

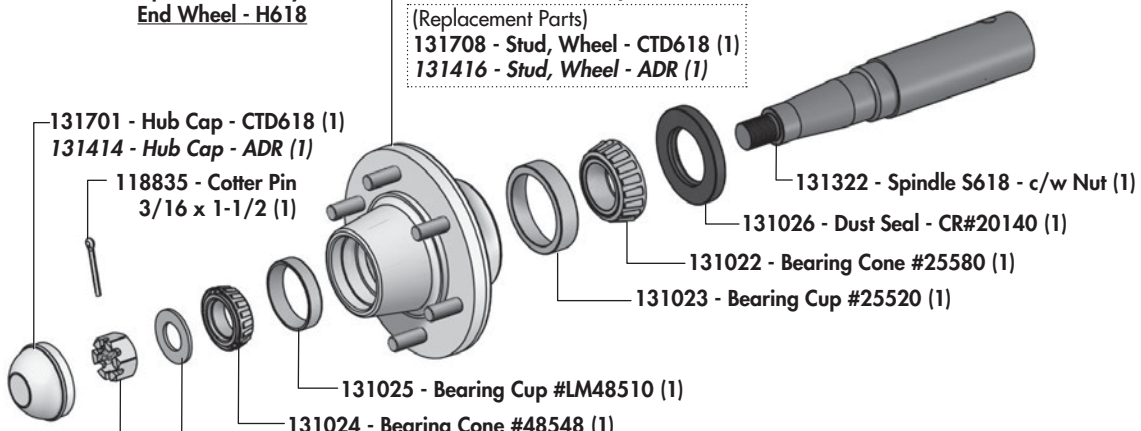

Also Requires: 131709 - Wheel Nut 9/16 -18 UNF (6)
Torque, 9/16 Wheel Nut: 120-130 lb.ft (165-175 N.m)

Harrow Section Components - 5 Row

6′ HARROW SECTION ASSEMBLY OVERVIEW

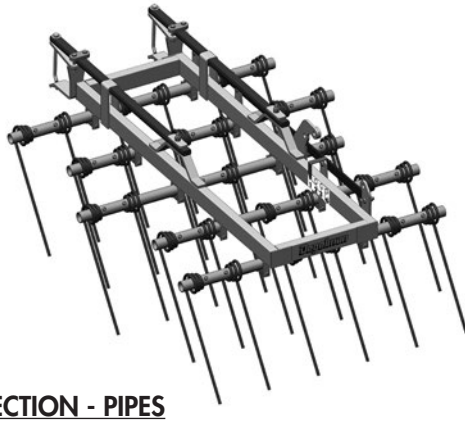

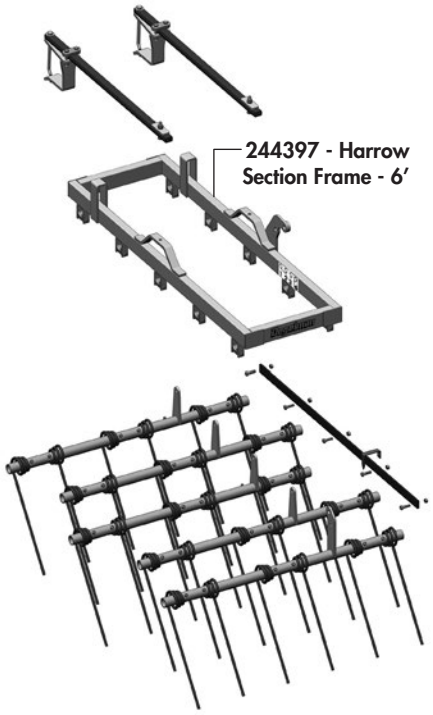

6′ HARROW SECTION - PIPES

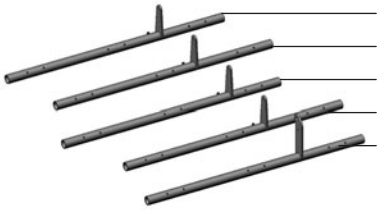

For Straight Harrow Section Frame - 6′

- 244400 - Pipe, 19″ offset (1)
- 244401 - Pipe, 23″ offset (1)
- 244402 - Pipe, 15″ offset (1)
- 244401 - Pipe, 23″ offset (1)
- 244403 - Pipe, 19″ offset (1)

10′ HARROW SECTION ASSEMBLY OVERVIEW

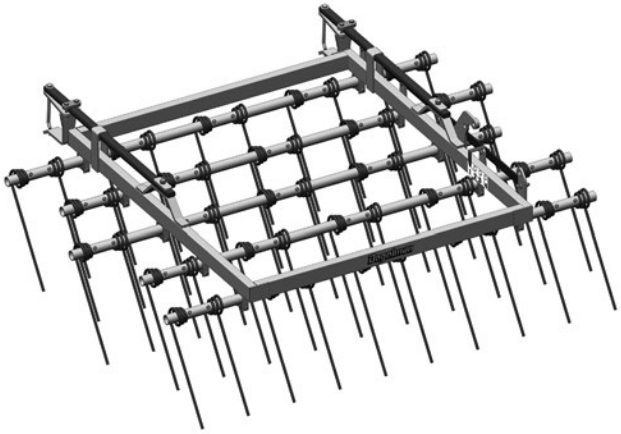

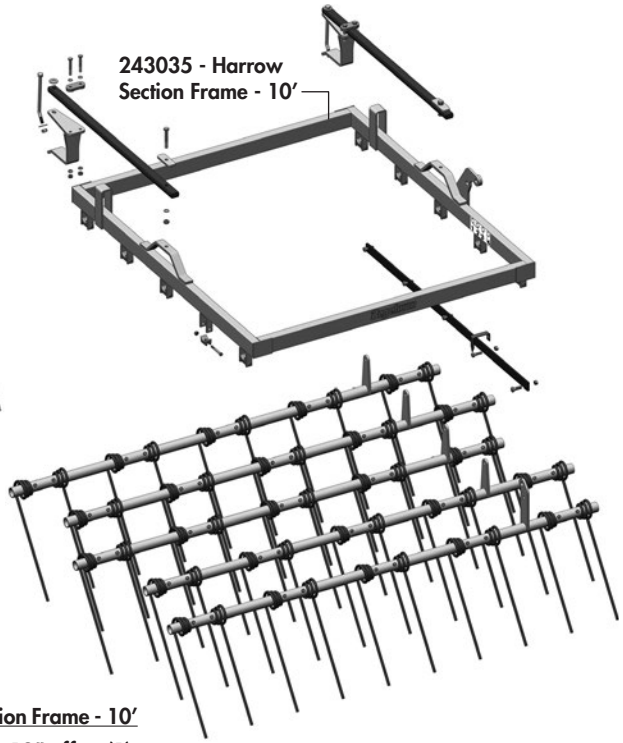

10′ HARROW SECTION - PIPES



For Straight Harrow Section Frame - 10′

- 243045 - Pipe, 19″ offset (1)
- 243046 - Pipe, 23″ offset (1)
- 243047 - Pipe, 15″ offset (1)
- 243046 - Pipe, 23″ offset (1)
- 243048 - Pipe, 19″ offset (1)

Harrow Section Components - 5 Row

TINE ANGLE LINK BAR - TYPICAL

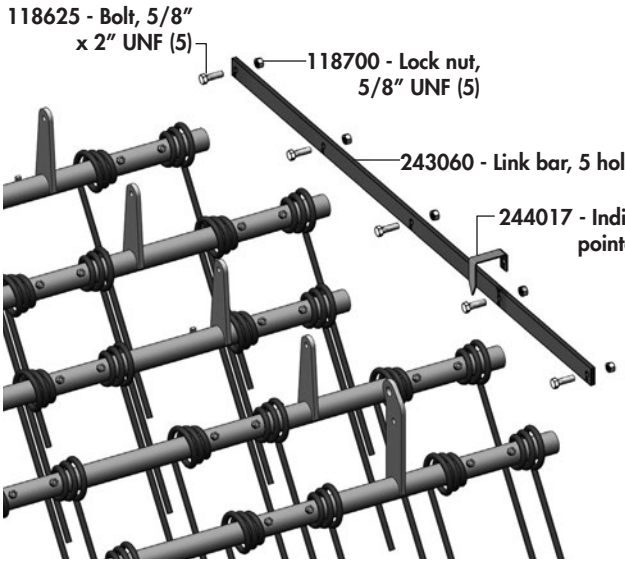

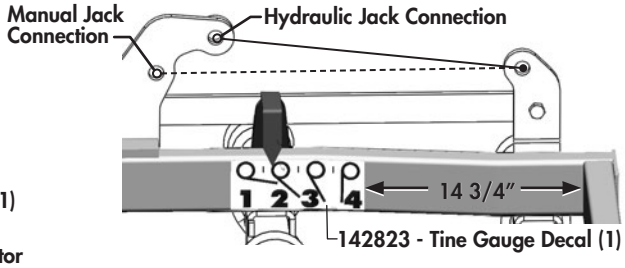

Hydraulic / Manual Adjustment (Hydraulic option available)

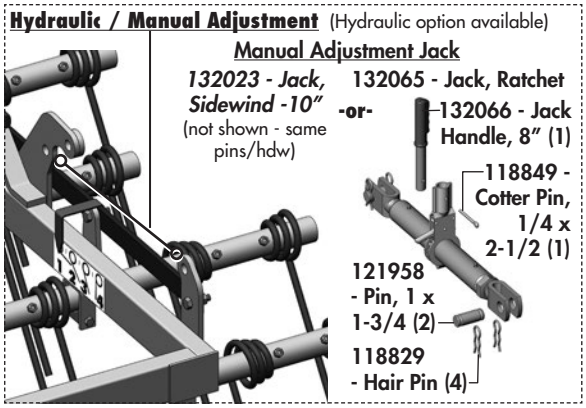

TYPICAL HARROW-FRAME MOUNTING COMPONENTS

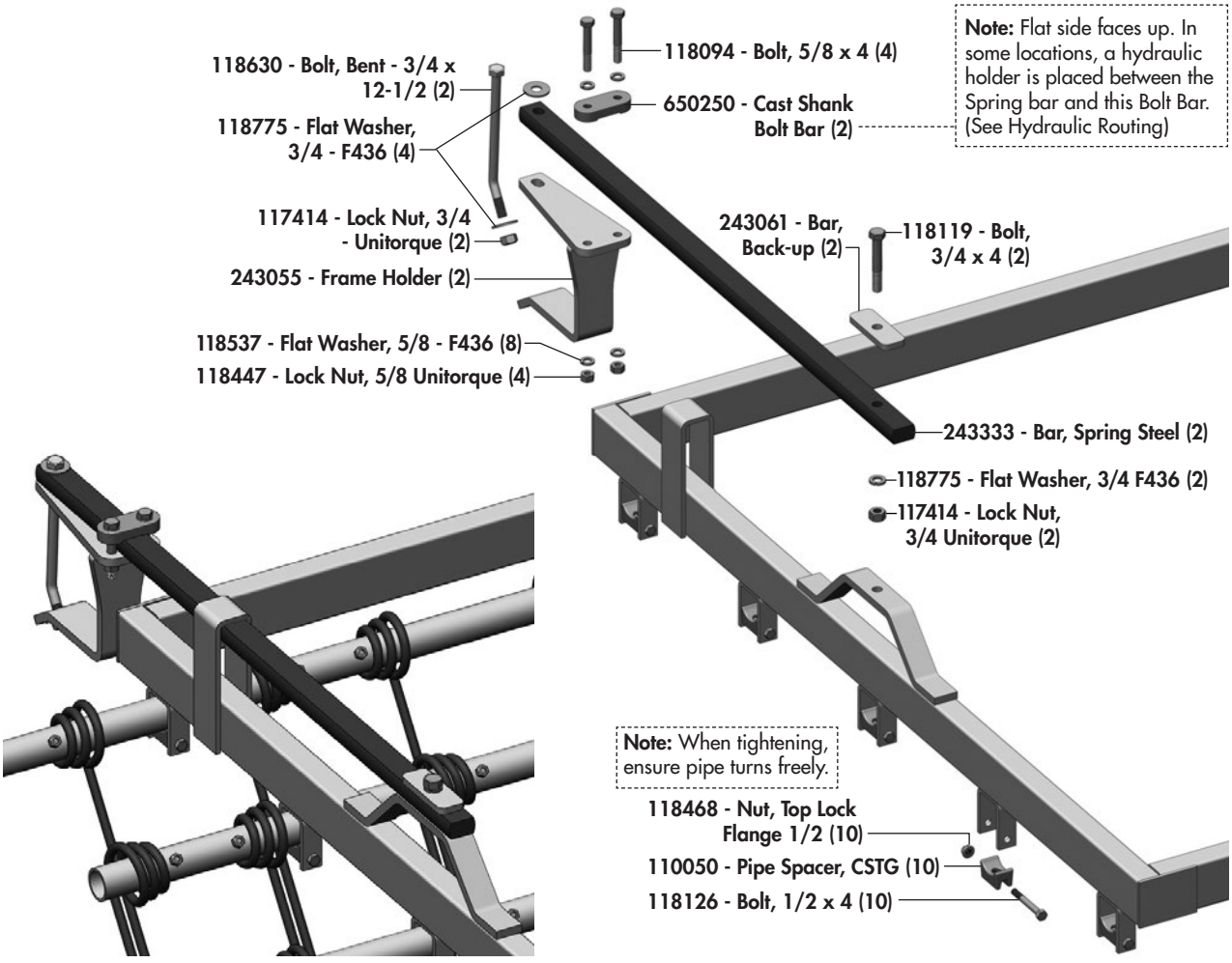

Note: Flat side faces up. In some locations, a hydraulic holder is placed between the Spring bar and this Bolt Bar. (See Hydraulic Routing)

Note: When tightening, ensure pipe turns freely.

Harrow Section Components - 7 Row

10′ HARROW SECTION OVERVIEW - 7 ROW

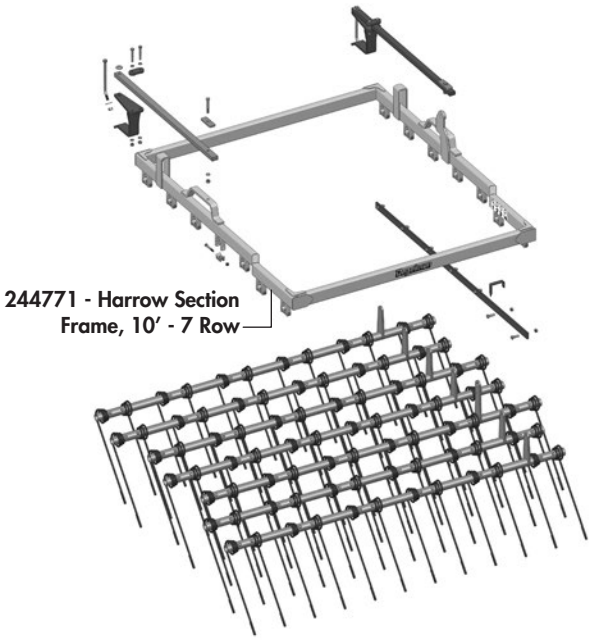

6′ HARROW SECTION OVERVIEW - 7 ROW

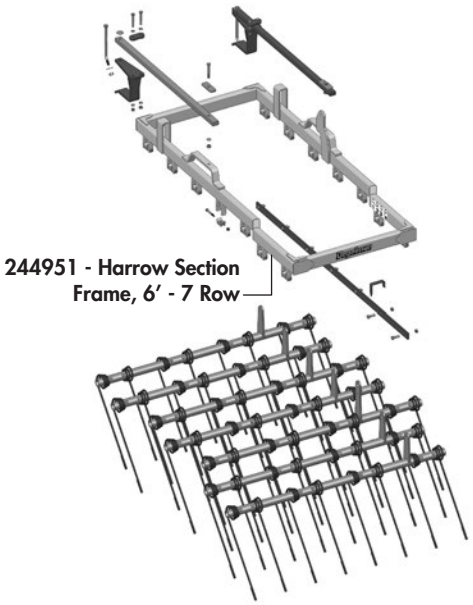

6′ Harrow Section Assembly - 7 Row

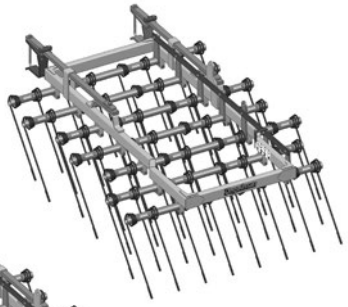

10′ Harrow Section Assembly - 7 Row

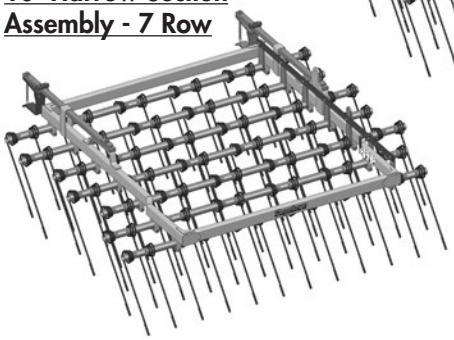

TINE ANGLE LINK BAR COMPONENTS - 7 ROW

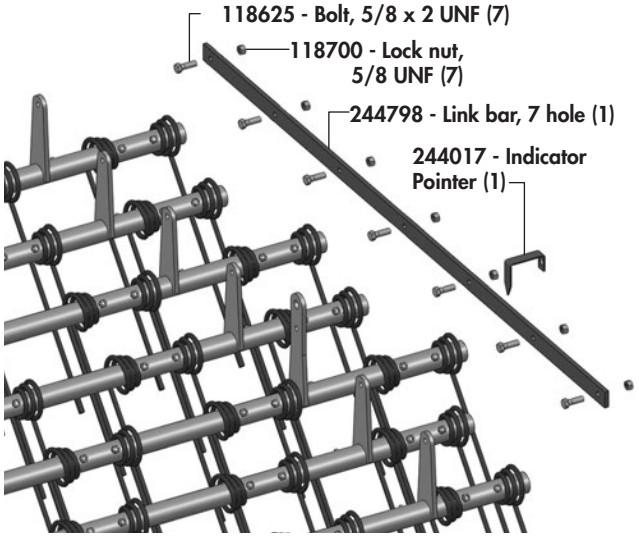

10′ HARROW SECTION - PIPES

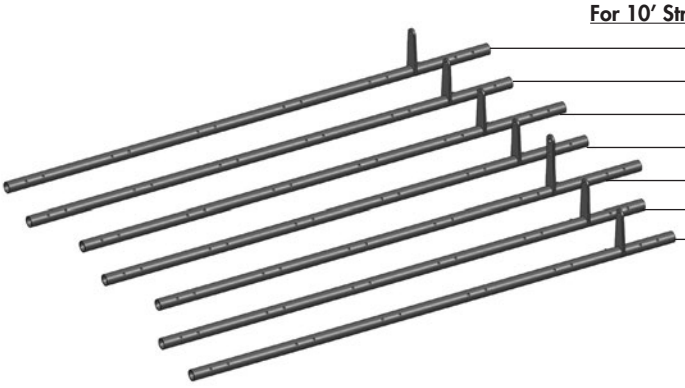

For 10′ Straight Harrow Section Frame - 7 Row

- 244781 - Pipe, 17-3/8″ offset (1)
- 244782 - Pipe, 14-1/2″ offset (1)
- 244783 - Pipe, 18-13/16″ offset (1)
- 244784 - Pipe, 15-15/16″ offset (1)
- 244785 - Pipe, 20-1/4″ offset (1)
- 244786 - Pipe, 13-1/16″ offset (1)
- 244787 - Pipe, 11-15/16″ offset (1)

6′ HARROW SECTION

For 6′ Section - 7 Row
(same offset as 10′)

- 244961 - Pipe (1)
- 244962 - Pipe (1)
- 244963 - Pipe (1)
- 244964 - Pipe (1)
- 244965 - Pipe (1)
- 244966 - Pipe (1)
- 244967 - Pipe (1)

Harrow Section Components - 7 Row

7 ROW HARROW-FRAME MOUNTING COMPONENTS

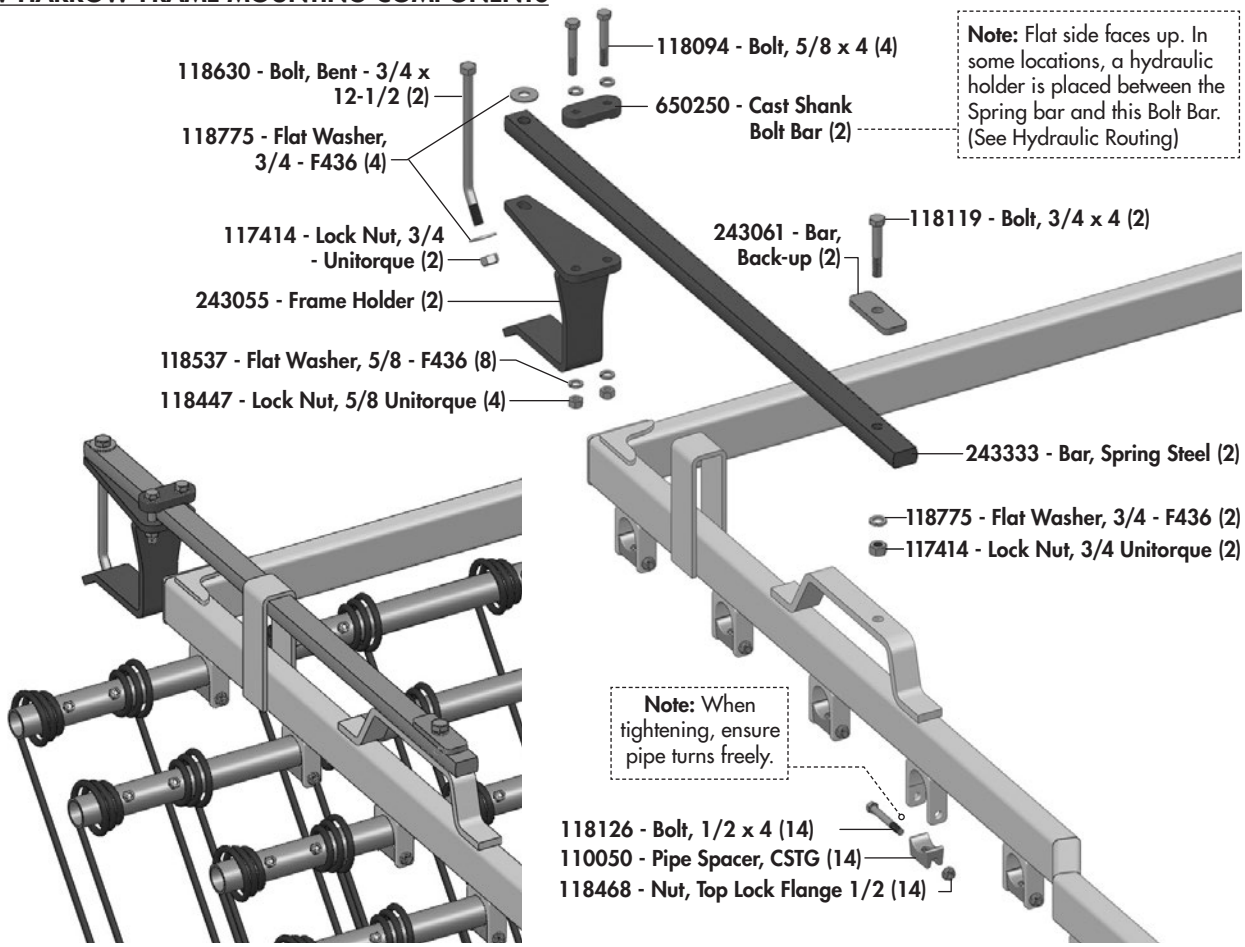

7' ROW TINE STOPS *(82' Only)*

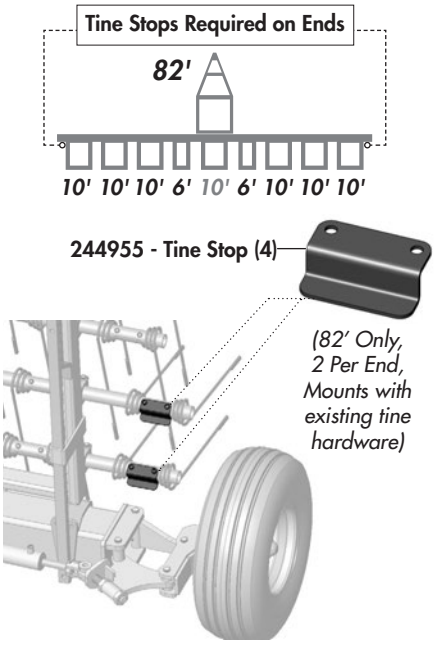

TINE ANGLE ADJUSTMENT Manual *(Hydraulic option is available)*

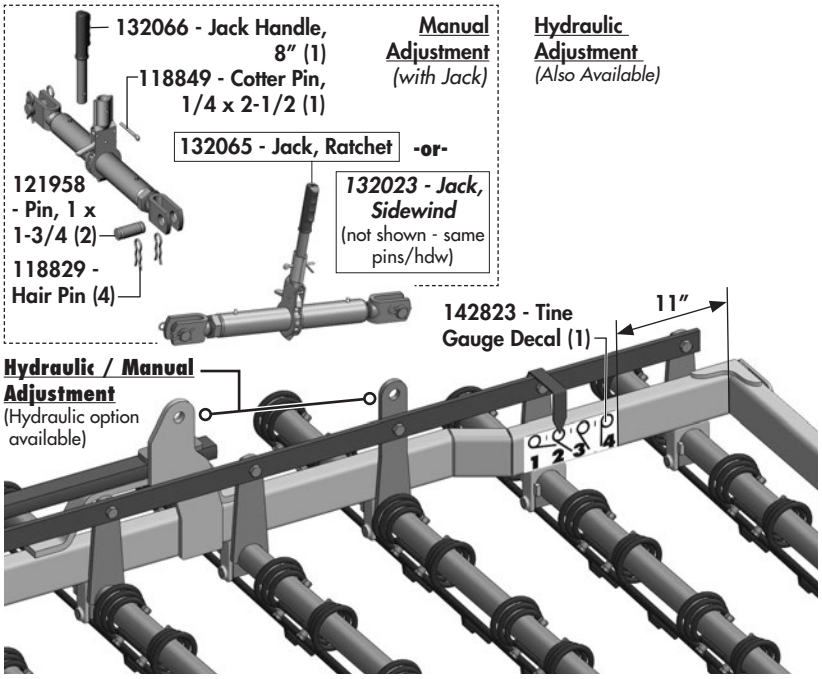

Harrow Section Layout & Tines

HARROW SECTION LAYOUT OVERVIEW

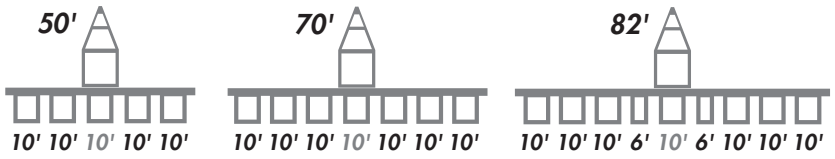

Harrow Frame Spacing - 5 Row Models

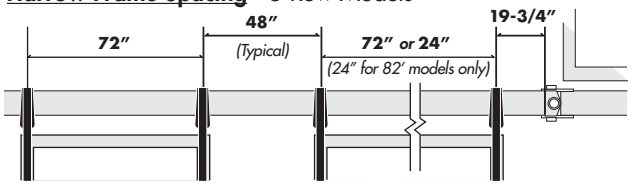

Harrow Frame Spacing - 7 Row Models

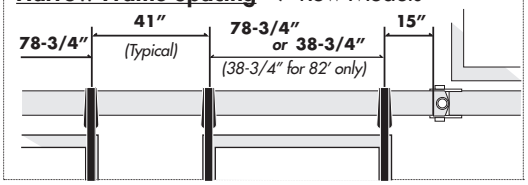

TINE MOUNTING HARDWARE

118729 - Lock nut, 1/2" (2)

118706 - Bolt, 1/2" x 2-3/4" HIHD (2)

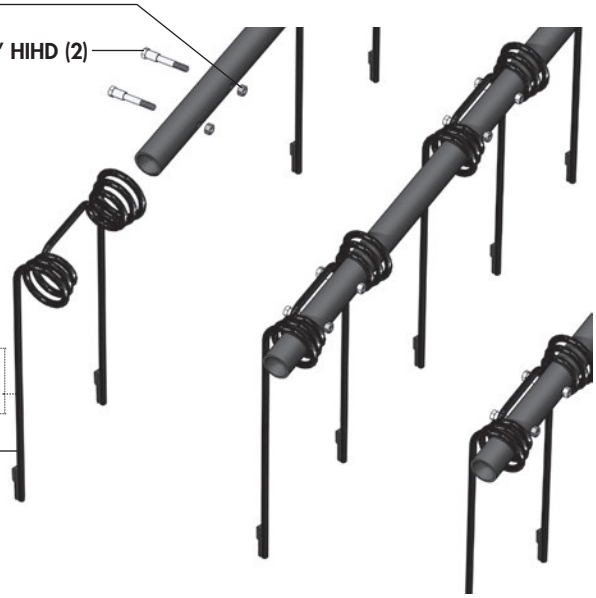

TINE OVERVIEW- 5 ROW

QUANTITY OF TINES

5 Row 50'	5 Row 70'	5 Row 82'
125	175	205

5 Row (6' Section - 15 tines)

5 Row (10' Section - 25 tines)

TINE OVERVIEW- 7 ROW

QUANTITY OF TINES REQUIRED

7 Row 50'	7 Row 70'	7 Row 82'
210	294	350

7 Row (6' Section - 28 tines)

7 Row (10' Section - 42 tines)

7 Row Tines

143513 - 1/2 x 26 Atom Jet Tip (1)

5 Row Tines

143507 - 5/8 x 26 Atom Jet Tip (1)

Rephasing Cylinder Components

MONARCH REPHASING CYLINDERS

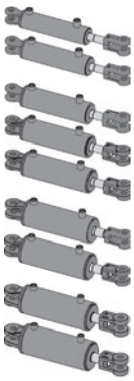

Monarch Cylinder#	Hydraulic Cylinder Description	Seal Kit	Pin Kit
123630	2-1/2" x 8 x 1-1/8 "R"	123642	123641
123631	2-3/4" x 8 x 1-1/8 "R"	123643	123641
123632	3" x 8 x 1-1/4 "R"	123644	123641
123633	3-1/4" x 8 x 1-1/4 "R"	123645	123641
123634	3-1/2" x 8 x 1-1/4 "R"	123646	123641
123635	3-3/4" x 8 x 1-3/8 "R"	123647	123641
123636	4" x 8 x 1-3/8 "R"	123648	123641
123637	4-1/4" x 8 x 1-1/2 "R"	123649	123629
123638	4-1/2" x 8 x 1-1/2 "R"	123650	123629

IMPORTANT: To ensure optimum performance, all entrapped air must be purged from the rephasing cylinder systems frequently. Follow the "Rephasing the Cylinder Circuits" procedure.

1. Place machine so all sections are lowered and flat in field position.
2. Set the Tractor flow to **Min. / Moderate**. Do NOT set tractor flow to maximum. Reducing the oil flow will reduce the amount of air that gets pressurized and mixed into the oil.
3. Cycle the cylinders - fully extended, fully retracted, and then fully extended again, this time holding it fully extended for about 30-40 seconds.
4. Repeat the cycle and hold process from Step 3 about 5 times.

Optional Accessories

PLATFORM FOR VALMAR®

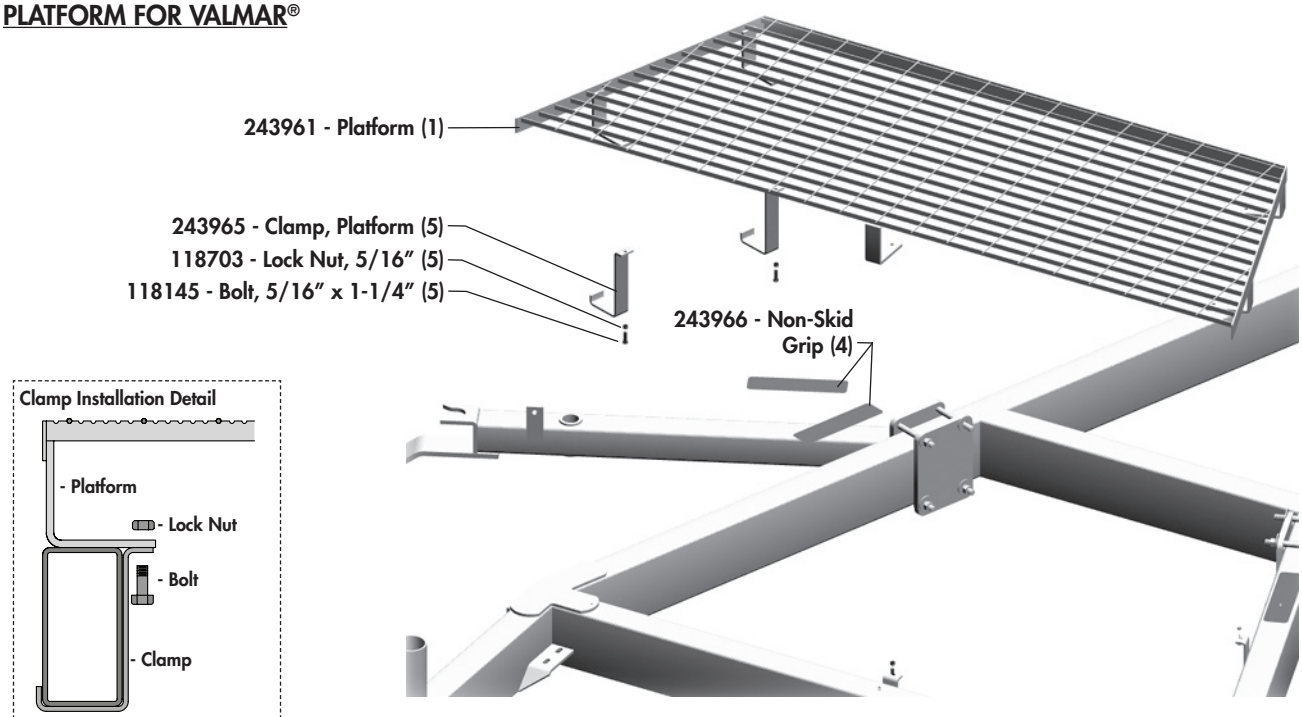

Transport Cylinder Hydraulic Hose Routing

Hydraulic Fittings

1	141581 - Coupler Tip, 3/4 ORB F	(2)
2	*141676 - Connector, 3/4 ORB M x M*	*(2)*
3	141832 - Coupler, Blue (+)	(1)
4	141833 - Coupler, Blue (-)	(1)
5	141515 - Connector, 3/4 JIC-m x ORB	(2)
6	141504 - 90° Elbow, 3/4 JIC-m x ORB	(4)
7	141501 - Tee, 3/4 JIC-m	(2)

Hydraulic Cylinders

• All Models

123240 - Cylinder, 4 x 31 x 2 (2)

123049 - Seal Kit (1)

(Previous)

• All Models Except *(7 Row - 70' & 82')*

123090 - Cylinder, 3-1/2 x 31 x 2 (2)

123091 - Seal Kit (1)

Hydraulic Hoses

(183) 126567 - Hose, 1/2 x 183 (2)

(174) 126600 - Hose, 1/2 x 174 (1)

(140) 126599 - Hose, 1/2 x 140 (1)

(86) 126598 - Hose, 1/2 x 86 (1)

(52) 126597 - Hose, 1/2 x 52 (1)

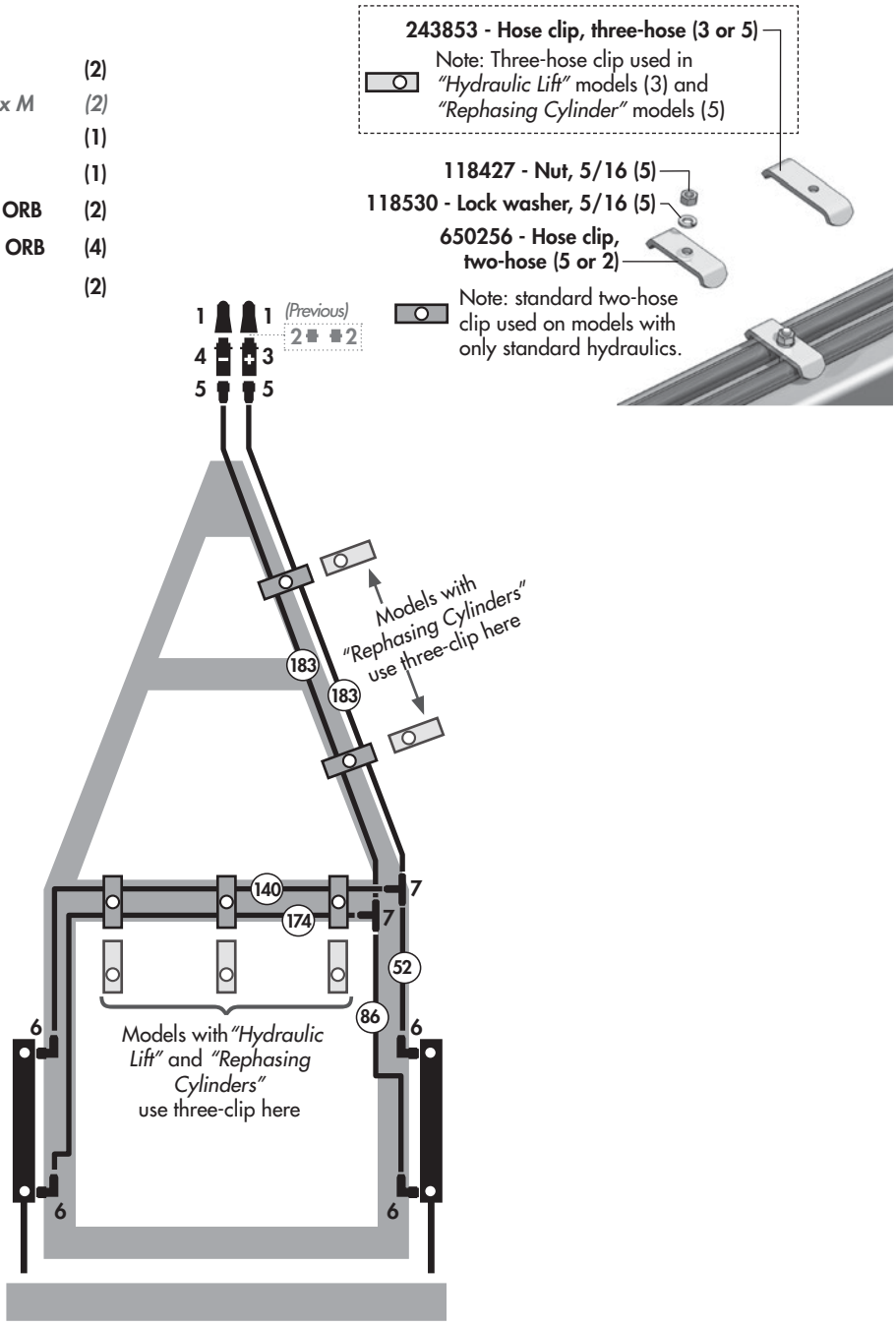

Wheel Cylinders Hydraulic Routing (Optional)

Hydraulic Fittings

1	141581 - Coupler Tip, 3/4 ORB F	(2)
2	*141676 - Connector, 3/4 ORB M x M*	*(2)*
3	141830 - Coupler, Green (+)	(1)
4	141831 - Coupler, Green (-)	(1)
5	141515 - Connector, 3/4 JIC-m x ORB	(2)
6	141504 - 90° Elbow, 3/4 JIC-m x ORB	(8)
7	141501 - Tee, 3/4 JIC-m	(2)

Hydraulic Cylinders

123640 - Trailer Wheel Cylinder, 3 x 8 x 1-1/4 (2)

123639 - End Wheel Cylinder, 2-3/4 x 8 x 1-1/4 (2)

Common Hoses

(186) 126612 - Hose, 1/2 x 186 (2)

(311) 126610 - Hose, 1/2 x 311 (1)

(98) 126611 - Hose, 1/2 x 98 (1)

Model Specific Hoses

	(A)	(B)	(C)
50′	318 (2)	288 (1)	348 (1)
70′	436 (2)	408 (1)	466 (1)
82′	510 (2)	480 (1)	540 (1)

126620 - Hose, 3/8 x 288 (1)
126088 - Hose, 3/8 x 318 (1)
126556 - Hose, 3/8 x 348 (1)
126617 - Hose, 3/8 x 408 (1)
126618 - Hose, 3/8 x 436 (1)
126619 - Hose, 3/8 x 466 (1)
126653 - Hose, 3/8 x 480 (1)
126654 - Hose, 3/8 x 510 (1)
126655 - Hose, 3/8 x 540 (1)

IMPORTANT: To ensure optimum performance, all entrapped air must be purged from the rephasing cylinder systems frequently. Follow the "Rephasing the Cylinder Circuits" procedure.

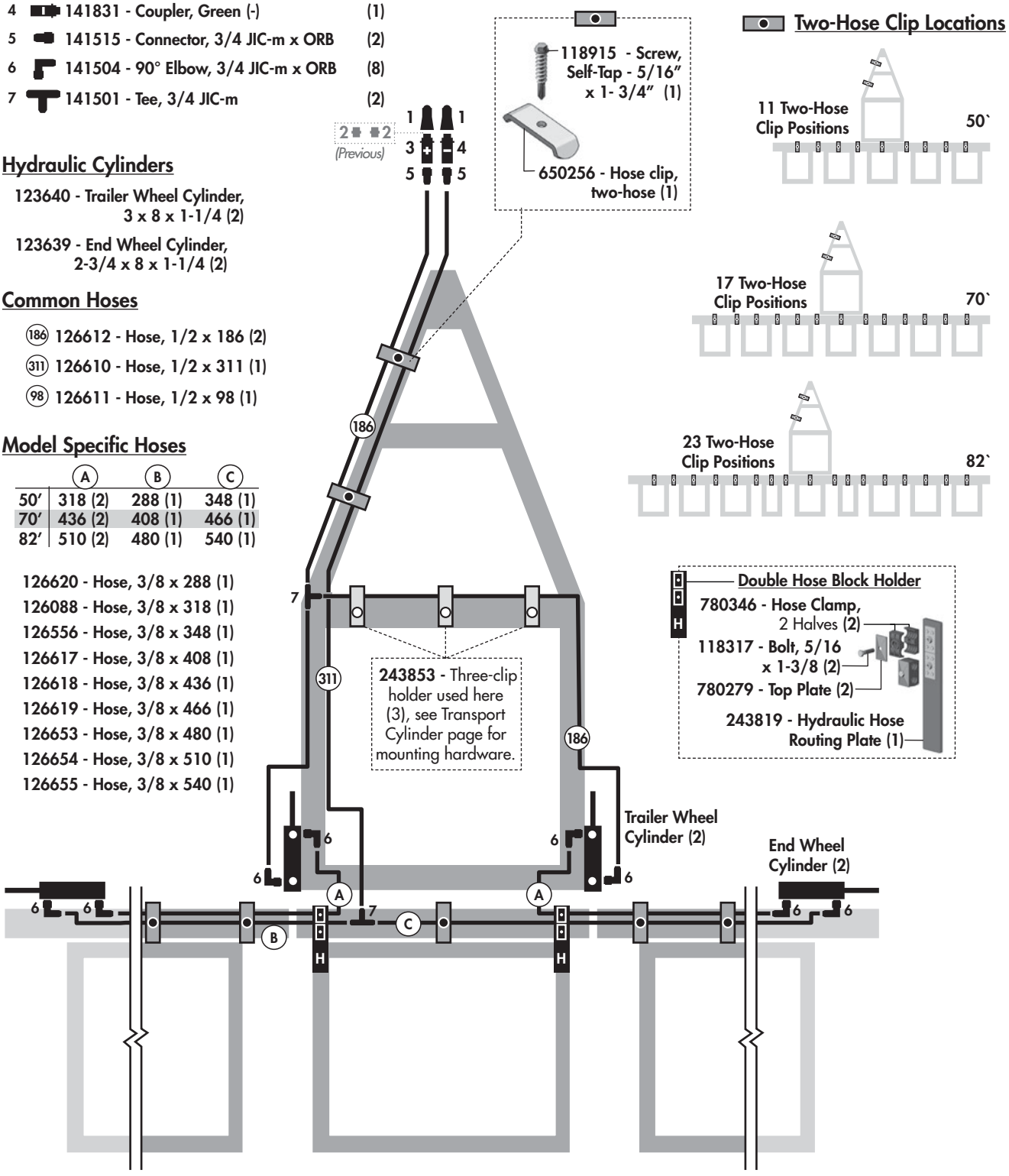

Tine Angle Rephasing Hydraulics (Optional)

Hydraulic Fittings

Note: *Number of 90° elbows vary depending on the number of rephasing hydraulic cylinders.*

1	141581 - Coupler Tip, 3/4 ORB F	(2)
2	*141676 - Connector, 3/4 ORB M x M*	*(2)*
3	141834 - Coupler, Brown (+)	(1)
4	141835 - Coupler, Brown (-)	(1)
5	141515 - Connector, 3/4 JIC-m x ORB	(2)
6	141504 - 90° Elbow, 3/4 JIC-m x ORB	(a/r)

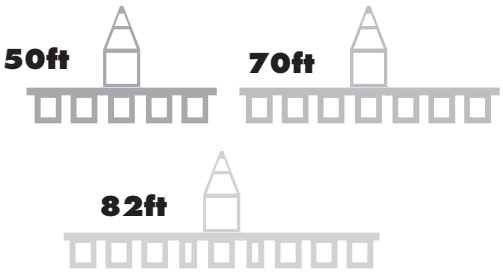

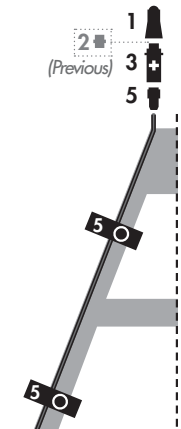

Tine Angle Rephasing Cylinders

Note: *Smallest Cylinder* ***(2-1/2")*** *is always located on far left harrow section. The cylinder size gets progressively larger to the right. Larger Strawmaster® models require more cylinders as shown below.*

Monarch Cylinder#	Hydraulic Cylinder Description
123630	2-1/2" x 8 x 1-1/8 "R"
123631	2-3/4" x 8 x 1-1/8 "R"
123632	3" x 8 x 1-1/4 "R"
123633	3-1/4" x 8 x 1-1/4 "R"
123634	3-1/2" x 8 x 1-1/4 "R"
123635	3-3/4" x 8 x 1-3/8 "R"
123636	4" x 8 x 1-3/8 "R"
123637	4-1/4" x 8 x 1-1/2 "R"
123638	4-1/2" x 8 x 1-1/2 "R"

IMPORTANT: To ensure optimum performance, all entrapped air must be purged from the rephasing cylinder systems frequently. Follow the "Rephasing the Cylinder Circuits" procedure.

Hydraulic Hoses

Note: *Part numbers for replacement hoses are listed below. Please refer to the diagram specific to your model to identify required hose(s).*

126623 - Hose, 3/8 x 212	126089 - Hose, 3/8 x 648
126080 - Hose, 3/8 x 258	126081 - Hose, 3/8 x 708
126620 - Hose, 3/8 x 288	126082 - Hose, 3/8 x 768
126604 - Hose, 3/8 x 300	126096 - Hose, 3/8 x 780
126087 - Hose, 3/8 x 588	126084 - Hose, 3/8 x 840

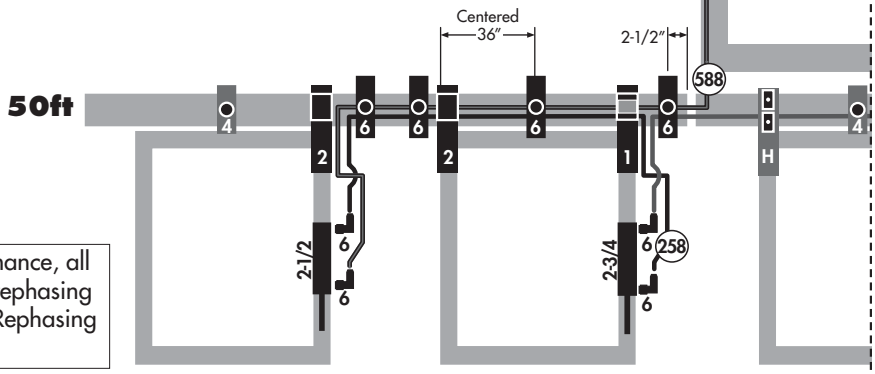

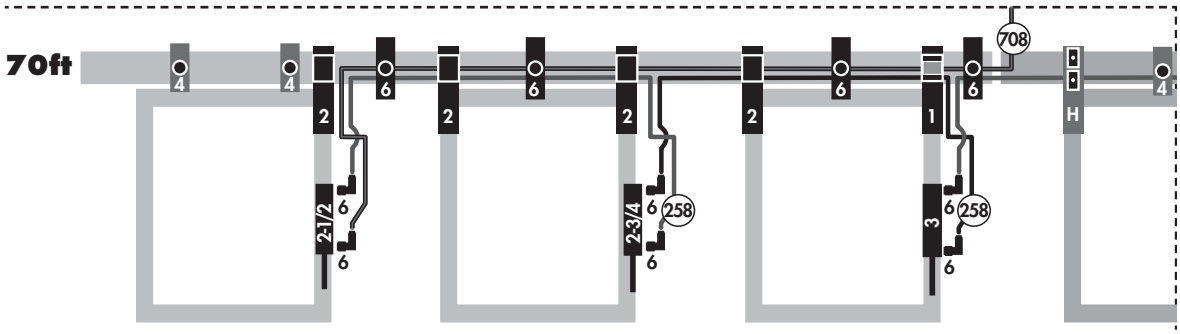

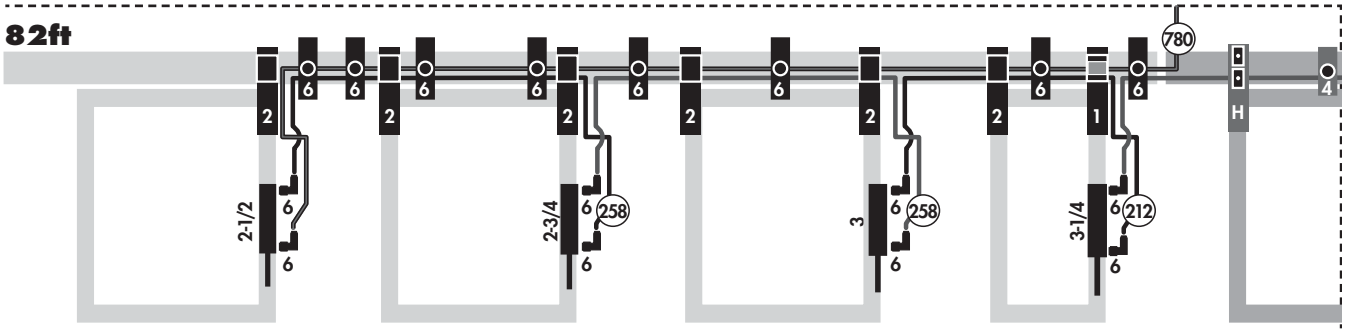

Tine Angle Rephasing Hydraulics (Optional)

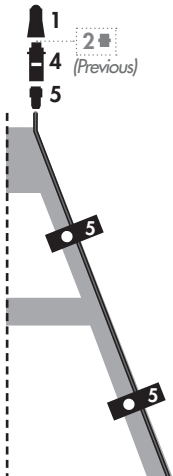

Hose Support Positioning

Install hose clamps behind the cast shank bolt bar.

Install hose support rings on the outside of the center beam's cylinder lugs.

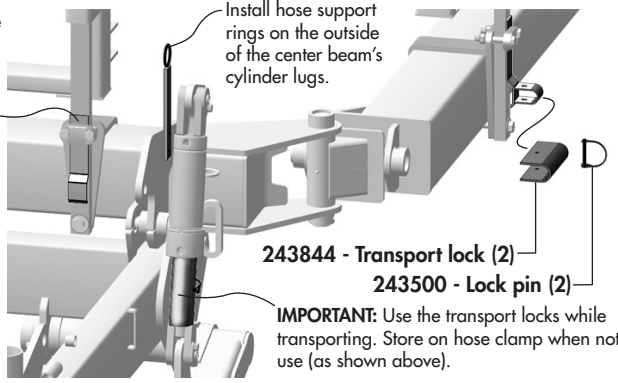

243844 - Transport lock (2)

243500 - Lock pin (2)

IMPORTANT: Use the transport locks while transporting. Store on hose clamp when not in use (as shown above).

Hose Clamps

243845 - 4 Hose Clamp *(with transport lock holder)*

243846 - 4 Hose Clamp

Previously used for last two hoses on End Sections

243894 - 2 Hose Clamp

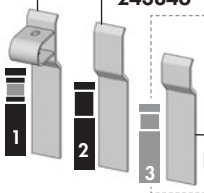

H — Double Hose Block Holder *(Refer to "Wheel Cylinders Hyd. Routing" Page for components)*

Hose Support Ring

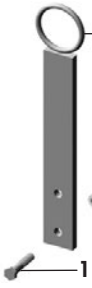

243850 - Hose Support Ring (2)

118403 - Nut, 3/8 (4)

118503 - Lock Washer, 3/8 (4)

118603 - Bolt, 3/8x 1-3/4 (4)

Hose Clips



650256 - Hose clip, two-hose — 4 Self-Tap Mount

243853 - Hose clip, three-hose — 5 Self-Tap Mount / 5 Stud Mounted

660747 - Hose clip, four-hose — 6 Self-Tap Mount

Hose Clips (Stud Mounted)

118427 - Nut, 5/16"

118530 - Lock washer, 5/16"



Hose Clips (Self Tapping Screw Mounted)

118915 - Self-Tapping Screw, 5/16 x1- 3/4



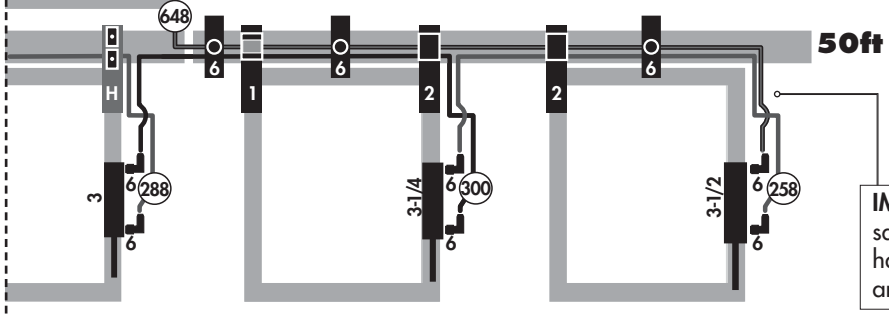

IMPORTANT: Ensure Hydraulic Hoses are safely routed and secured on the outside of all harrow sections as to avoid "rubbing" against any components and causing wear issues.

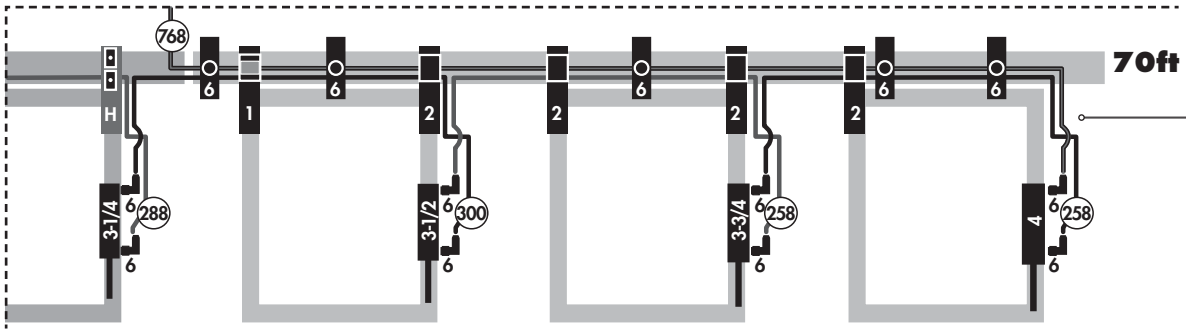

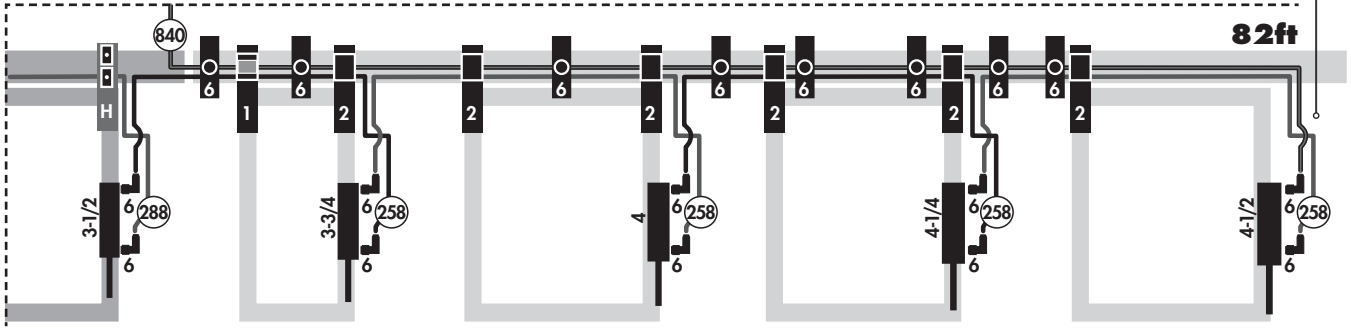

Electrical Layout & Components

(4-wire light with brake function)

Wiring Assembly - 50'	Wiring Assembly - 70'/82'
244151 - Wiring Harness (1)	**244150 - Wiring Harness (1)**
244154 - Extension (2)	**244154 - Extension (2)**





7 Pole Plug

7 POLE PLUG

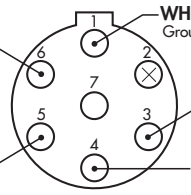

CROSS JOINT ROUTING

(View from Below - Transport Position)

Zip-tie wiring harness to the tie-off plates.

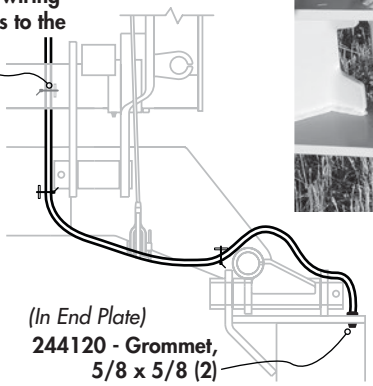

(In End Plate)
244120 - Grommet, 5/8 x 5/8 (2)

Splice - White/Brown/Red

Wiring Plug Connection

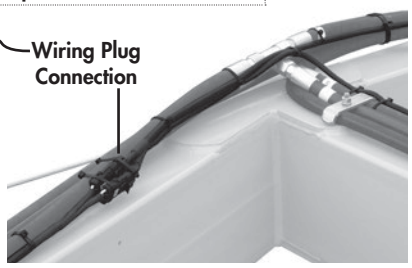

Cross Joint Wire Routing

Connectors-LH
A - Brown
B - **Yellow**
C - White
D - Red

Connectors-RH
A - Brown
B - **Green**
C - White
D - Red

Weatherpack connectors must be installed after wiring has been run through the framework.

129127 - Lamp, Single Amber (2) (2 Pin)

129129 - Lamp, Single Red (2) (3 Pin)

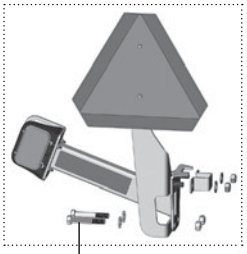

(LH) **118927 Bolt, 5/8 x 4-1/2 (1)**

129129 - Lamp, Single Red (2)

(Existing)

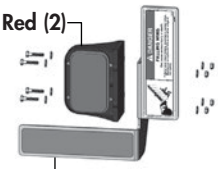

245457 - Light Bracket (1)

118123 Bolt, 1/4 x 1 (2)

118483 - Lock Nut, 1/4 - Unitorque (2)

142135 - SMV-Sign (1)

129127 - Lamp, Single Amber (2)

118756 - Bolt, 1/4 x 1-1/4 (16)

243169 - Sign Holder (1)

LH SIDE

118541 - Flat Washer, 1/4 SAE (32)

118378 - Bolt, 5/8 x 1-3/4 (4)

118537 - Flat Washer, 5/8 (8)

118447 - Lock Nut, 5/8 Unitorque (1)

118483 - Lock Nut, 1/4 (16)

245458 - Harrow Clamp (2)

245451 - Amber Light Bracket - LH (1)

245450 - Amber Light Bracket - RH (1)

(Existing)

(LH only) **118927 Bolt, 5/8 x 4-1/2 (1)**

(Side of Beam) **244511 - Grommet, 3/8 x 1/4 (2)**

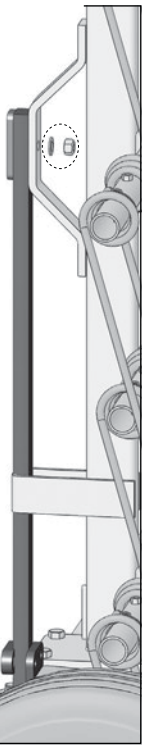

142696 - Decal, Danger - Falling Wing (2)

245456 - Light Bracket (1)

142650 - Reflector, Fluorescent - 9 (2)

RH SIDE

142556 - Reflector, Red - 9 (2)

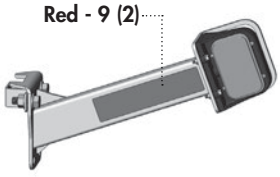

Warranty

Retail Customer's Responsibility Under Degelman Warranty.

It is the retail customer and/or Operator's responsibility to read the Operator's Manual, to operate, lubricate, maintain and store the equipment in accordance with all instructions and safety procedures. Failure of the operator to read the operators manual is a misuse of this equipment.

It is the retail customer and/or operators responsibility to inspect the product and to have any part(s) repaired or replaced when continued operation would cause damage or excessive wear to other parts or cause safety hazard.

It is the retail customer's responsibility to deliver the product to the authorized Degelman dealer, from whom he purchased it, for service or replacement of defective parts, which are covered by warranty. Repairs to be submitted for warranty consideration must be made within forty-five days of failure.

It is the Retail Customer's responsibility for any cost incurred by the dealer for hauling of the product for the purpose of performing a warranty obligation or inspection.

WARRANTY INFORMATION

Make certain the warranty registration card has been forwarded to:

Degelman Industries LP
Box 830 - 272 Industrial Dr.
Regina, SK, Canada
S4P 3B1

Always give your dealer the serial number of your Degelman product when ordering parts or requesting service or other information.

The serial number is located on the machine as shown in the diagram below. In the space provided record the model number, the serial number and the date of purchase to assist your dealer in providing you with prompt and efficient service.

SERIAL NUMBER: _____

MODEL NUMBER: _____

DATE OF PURCHASE: _____

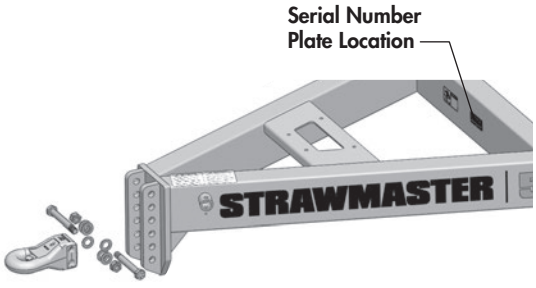

2 Year

Limited Warranty - Agricultural Products

Degelman Industries LP ("Degelman") warrants to the original purchaser of any new Degelman equipment, purchased from an authorized Degelman dealer, that the equipment will be free from defects in material and workmanship for a period of two (2) years from the date of delivery, for non-commercial use (including farm, institutional, government, and municipality) and (1) year from the date of delivery for commercial use. The obligation of Degelman to the purchaser under this warranty is limited to the repair or replacement of defective parts in the first year and to the provision, but not the installation of replacement parts in the second year. Degelman reserves the right to inspect any equipment or parts which are claimed to have been defective in material or workmanship.

This warranty limits its replacement or repair coverage to what is consistent with the warranty of Degelman's suppliers of purchased components.

Replacement or repair parts installed in the equipment covered by this limited warranty are warranted for ninety (90) days from the date of delivery of such part or the expiration of the applicable new equipment warranty period, which ever occurs later. Warranted parts shall be provided at no cost to the user at an authorized Degelman dealer during regular working hours. Warranted replacement parts will either be replaced or rebuilt at Degelman's discretion.

Disclaimer of implied warranties & consequential damages

This warranty shall not be interpreted to render Degelman Industries LP liable for injury, death, property damage or damages of any kind, whether direct, consequential, or contingent to property. Without limiting the generality of the foregoing, Degelman shall not be liable for damages resulting from any cause beyond its reasonable control, including, without limitation, loss of crops, any expense or loss of labour, supplies, rental machinery or loss of use.

No other warranty of any kind whatsoever, express or implied is made with respect to this sale; and all implied warranties of merchantability and fitness for a particular purpose which exceed the obligations set forth in this written warranty are hereby disclaimed and excluded from this sale. This exclusion shall not apply in any jurisdiction where it is not permitted by law.

This limited warranty shall not apply:

1. If, in the sole opinion of Degelman, the unit has been subjected to misapplication, abuse, misuse, negligence accident or incorrect off-site machine set-up.
2. To any goods that have sustained damage or deterioration attributable to a lack of routine maintenance (eg. Check and Re-torque of fastening hardware, Hydraulic fluid purities, drive train alignments, and clutch operation)
3. If parts not made or supplied by Degelman have been used in the connection with the unit, if, in the sole judgement of Degelman such use affects its performance, safety, stability or reliability.
4. If the unit has been altered or repaired outside of an authorized Degelman dealership in a manner which, in the sole judgement of Degelman, affects its performance, safety, stability or reliability.
5. To expendable or wear items such as (eg. Harrow tines, Rock Picker and Rock Rake wear teeth and replaceable bushings and pins.) and any other items that in the company's sole judgement are a wear item.

No employee or representative of Degelman Industries LP is authorized to change this limited warranty in any way or grant any other warranty unless such change is made in writing and signed by the Degelman Service Manager.

This limited warranty is subject to any future availability of supply, which may directly affect Degelman's ability to obtain materials or manufacture replacement parts.

Degelman reserves the right to make improvements in design or changes in specifications at any time, without incurring obligations to owners of equipment previously delivered.

This limited warranty is subject to compliance by the customer to the enclosed *Retail Customer's Responsibility Under Degelman Warranty.*

© 2025 Degelman Industries LP