Degelman

OPERATOR & PARTS MANUAL

prong picker
R570P

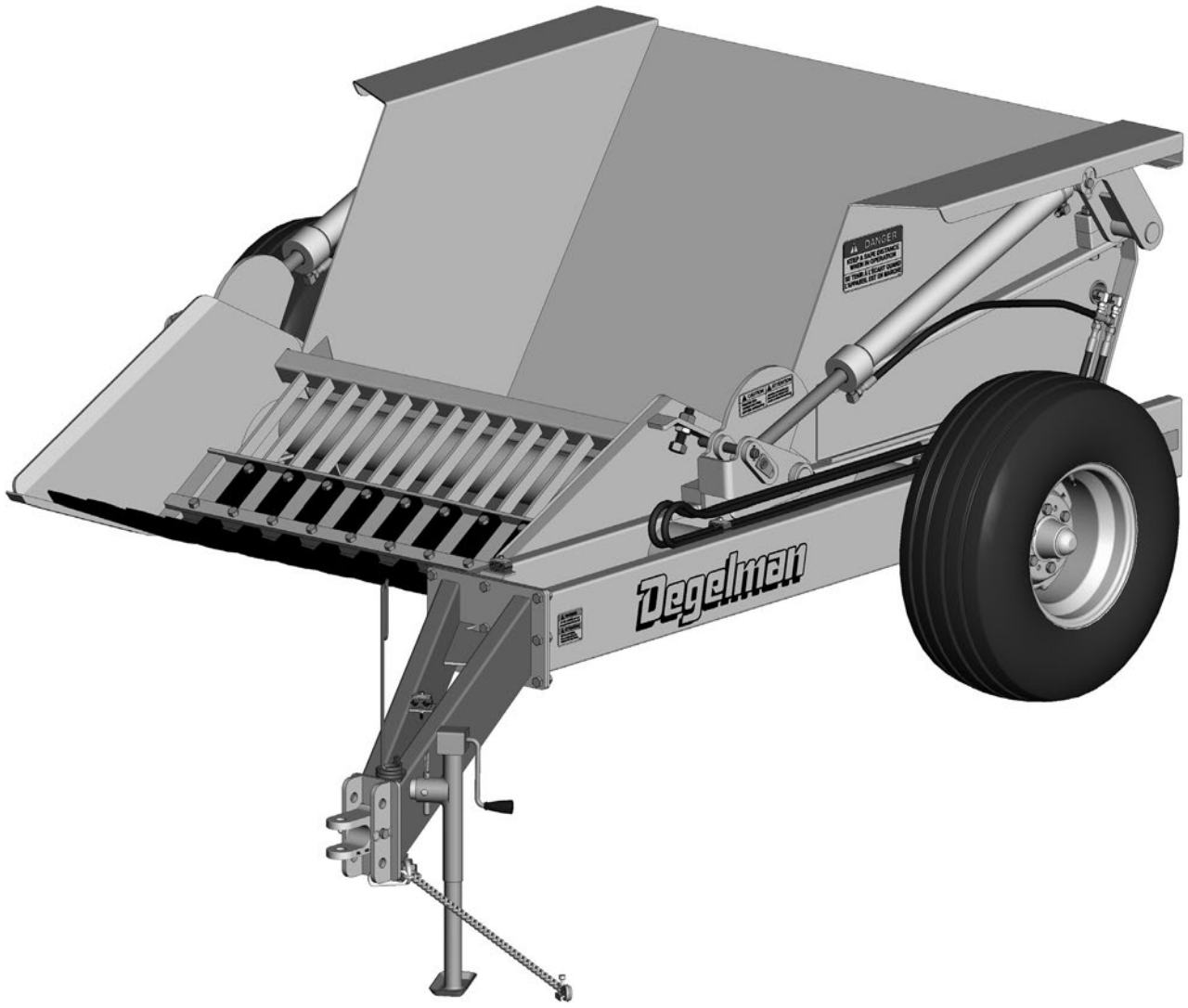

prong picker
R570P

142636 v1.6

DEGELMAN INDUSTRIES LP
BOX 830-272 INDUSTRIAL DRIVE,
REGINA, SK, CANADA, S4P 3B1
FAX 306.543.2140 PH 306.543.4447
1.800.667.3545 DEGELMAN.COM

PRONG PICKER
R570P

Degelman

prong picker
R570P

TABLE OF CONTENTS - OPERATORS SECTION

Introduction	*1*
Safety	*2*
Overview	*4*
Assembly	*5*
Preparation	*6*
Tractor Preparation	*6*
Hook-up / Unhooking	*6*
Pre-Operation Checklist	*8*
Operation	*9*
Transporting	*11*
Storage / Safety Decals	*12*
Service & Maintenance	*13*
Service Intervals	*15*
Adjustments / Repair	*16-19*
Troubleshooting	*22*

PARTS SECTION

Hitch Components	*24*
Hopper, Grill, Mainframe Components	*25*
Wheel Components	*26*
Hydraulics and Cylinder Components	*27*
Warranty	*28*

DEGELMAN INDUSTRIES LP
BOX 830-272 INDUSTRIAL DRIVE,
REGINA, SK, CANADA, S4P 3B1
FAX 306.543.2140 PH 306.543.4447
1.800.667.3545 DEGELMAN.COM

IMPORTANT:



READ MANUAL

Introduction

prong picker
R570P

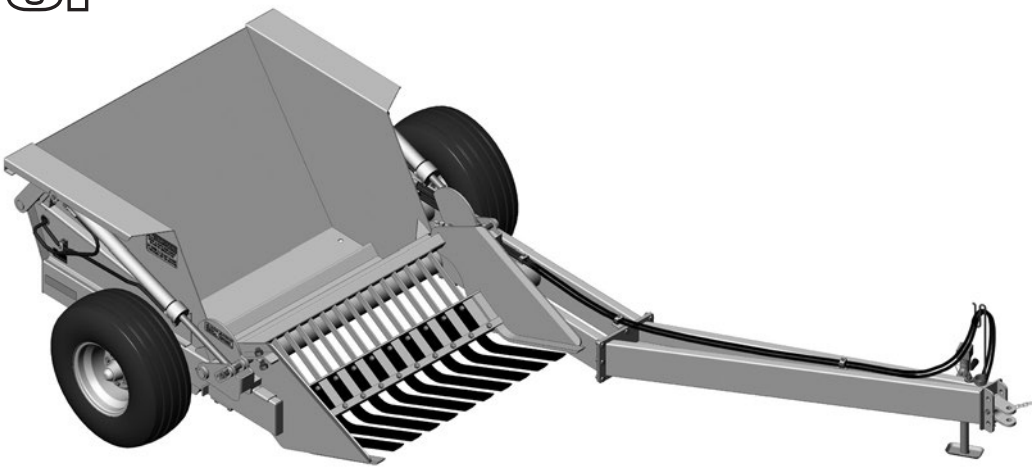

CONGRATULATIONS Congratulations on your choice of a Degelman Prong Rock Picker to complement your farming operation. It has been designed and manufactured to meet the needs of a discerning Agricultural market for the efficient picking of rocks. Use this manual as your first source of information about this machine. If you follow the instructions given in this manual, your machine will work well for many years.

Safe, efficient and trouble free operation of your Degelman Rock Picker requires that you and anyone else who will be operating or maintaining the Rock Picker, read and understand the Safety, Operation, Maintenance and Troubleshooting information contained within this Manual.

Keep this manual handy for frequent reference and to pass on to new operators or owners. Call your Degelman Dealer if you need assistance, information or additional copies of the manual.

OPERATOR ORIENTATION - The directions left, right, front and rear, as mentioned throughout the manual, are as seen from the tractor drivers' seat and facing in the direction of travel.

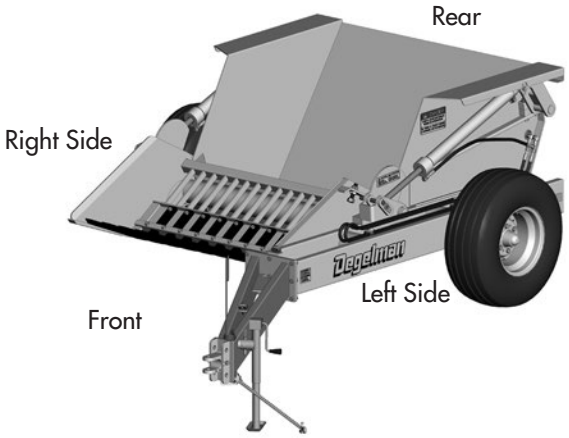

Why is SAFETY important to YOU?

3 **BIG** Reasons:

- Accidents Can Disable and Kill
- Accidents Are Costly
- Accidents Can Be Avoided



SAFETY ALERT SYMBOL

The **Safety Alert Symbol** identifies important safety messages applied to the Rock Picker and in this manual. When you see this symbol, be alert to the possibility of **injury or death**. Follow the instructions provided on the safety messages.

The **Safety Alert Symbol** means:

ATTENTION!
BECOME ALERT!
YOUR SAFETY IS INVOLVED!

SIGNAL WORDS

Note the use of the Signal Words: **DANGER**, **WARNING**, and **CAUTION** with the safety messages. The appropriate Signal Word has been selected using the following guidelines:

DANGER — **DANGER:** Indicates an imminently hazardous situation that, if not avoided, **WILL** result in death or serious injury if proper precautions are not taken.

WARNING — **WARNING:** Indicates a potentially hazardous situation that, if not avoided, **COULD** result in death or serious injury if proper precautions are not taken.

CAUTION — **CAUTION:** Indicates a potentially hazardous situation that, if not avoided, **MAY** result in minor or moderate injury if proper practices are not taken, or, serves as a reminder to follow appropriate safety practices.

SAFETY

YOU are responsible for the safe operation and maintenance of your equipment.

YOU must ensure that you and anyone else who is going to operate, maintain or work around the equipment be familiar with the operating and maintenance procedures and related **safety** information contained in this manual.

Remember, **YOU** are the key to safety. Good safety practices not only protect you but also the people around you. Make these practices a working part of your safety program. Be certain that **EVERYONE** operating this equipment is familiar with the recommended operating and maintenance procedures and follows all the **safety** precautions.

Most accidents can be prevented. Do not risk injury or death by ignoring good safety practices.

- Equipment owners must give operating instructions to operators or employees before allowing them to operate the equipment, and at least annually thereafter per OSHA regulation 1928.51.
- The most important safety device on this equipment is a **SAFE** operator. It is the operator's responsibility to read and understand ALL Safety and Operating instructions in the manual and to follow these. All accidents can be avoided.
- A person who has not read and understood all operating and safety instructions is not qualified to operate the machine. An untrained operator exposes himself and bystanders to possible serious injury or death.
- Do not modify the equipment in any way. Unauthorized modification may impair the function and/or safety and could affect the life of the equipment.
- Think **Safety**! Work ***Safely***!

GENERAL SAFETY

1. Read and understand the Operator's Manual and all safety signs before operating, maintaining or adjusting.



2. Install and properly secure all shields and guards before operating. Use hitch pin with a mechanical locking device.
3. Have a first-aid kit available for use should the need arise and know how to use it.



4. Have a fire extinguisher available for use should the need arise and know how to use it.



5. Wear appropriate protective gear. This list includes but is not limited to:
   - A hard hat
   - Protective shoes with slip resistant soles
   - Protective glasses or goggles
   - Heavy gloves
   - Wet weather gear
   - Hearing protection
   - Respirator or filter mask



6. Clear the area of people, especially small children, and remove foreign objects from the machine before starting and operating.
7. Do not allow riders.
8. Stop tractor engine, set park brake, remove ignition key and wait for all moving parts to stop before servicing, adjusting, repairing or unplugging.
9. Review safety related items with all operators annually.

Overview

TO THE NEW OPERATOR OR OWNER

It is the owner's or operator's responsibility to read this manual carefully to learn how to operate the machine safely and how to set it to provide maximum efficiency. Safety is everyone's business. By following safe operating practices, a safe environment is provided for the operator and bystanders.

The manual will take you step-by-step through your working day. By following the operating instructions in conjunction with a good maintenance program, your machine will provide many years of trouble-free service.

PRINCIPLES OF OPERATION

The Degelman Prong Type Rock Picker is a pull behind machine, capable of spot picking and boulder removal. The double-acting hydraulic cylinders perform two jobs: they lift and control the picking grill, and also lift the hopper to dump the rocks and boulders.

Rock Picker Components

1. Hitch Pole
2. Grill
3. Hopper Box
4. Lift/Dump Cylinders
5. Transport Locks **(on both LH & RH sides)**
6. Grill Depth Adjustment **(on both LH & RH sides)**

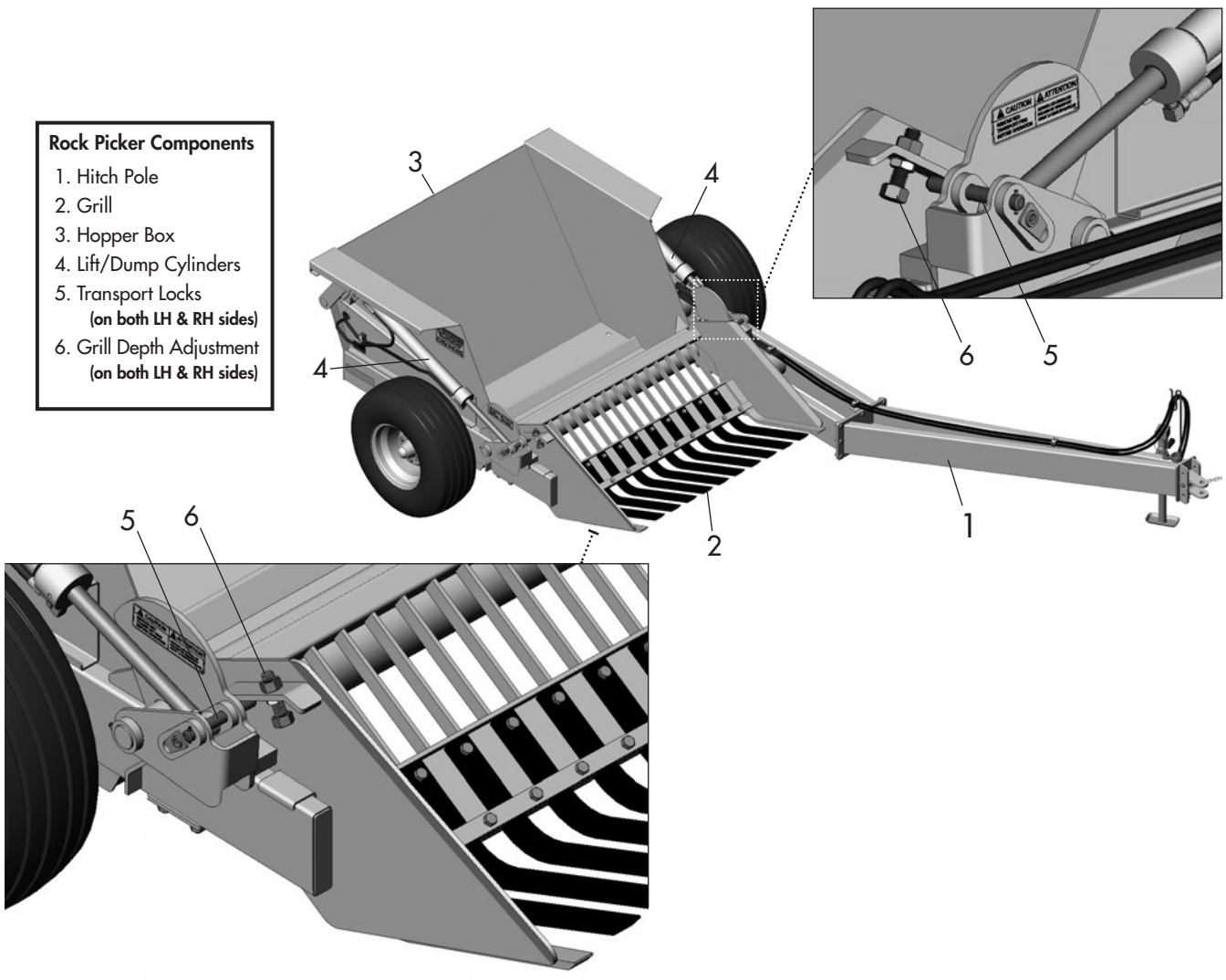

ASSEMBLY PROCEDURE

As received, place the machine on level ground on top of two 4"x 4" wooden planks layed lengthwise.

1 - Installing the Hitch Pole

The hitch pole may be attached to the prong picker frame in two different positions:

Offset To The Left Hand Side
- Required for field operation.

Offset To The Center
- Recommended when the machine is to be hauled for long distance or on the highway.

Install hitch pole to picker frame front mounting plate, using some wooden blocks to maintain an appropriate height.

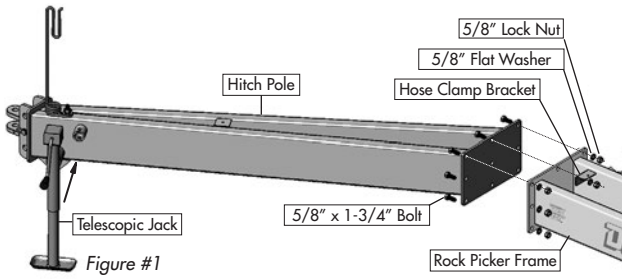

Figure #1

Make the attaching holes coincide and install nine 5/8" x 1-3/4" Hex bolts, Flat washers and Lock nuts. While installing the upper centre bolt, attach the hose clamp bracket, as shown in Figure #1.

2 - Installing the Telescopic Jack

In the fully retracted position, attach the telescopic jack to the mounting socket on the left side of the hitch pole and secure with the chained pin. Reference Figure #1. Then, extend the jack stand to touch the ground.

Note: Once the rock picker is ready for operation and hitched to the tractor, raise the jack, remove pin, rotate the jack assembly to a horizontal position and reinstall the pin to secure the jack assembly to the hitch pole.

3 - Securing Hydraulic Hoses to Hitch Pole

a) Cut off plastic ties for shipping protection and unfold hoses toward the hitch pole clevis.

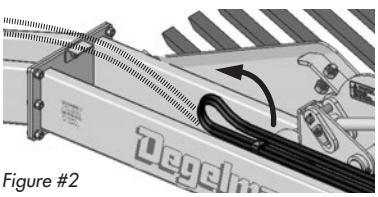
Figure #2

b) Using the 3/8" hose clamps, 5/16" x 2-1/2" bolt, 5/16" flat washers, lock washers and nuts, secure hydraulic hoses in place and tighten. Reference Figure #3.

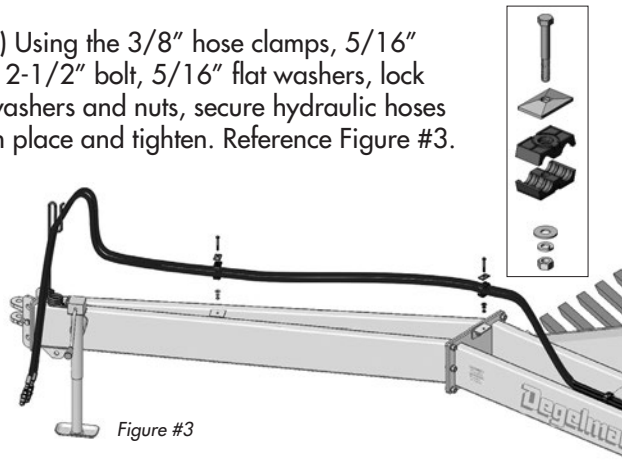
Figure #3

4 - Installing Wheel, Hub, and Spindle Assemblies

Before installing the wheel, hub, and spindle assemblies - block up the prong picker frame to a height of 14 inches evenly, as shown in Figure #4. Other alternate methods of lifting the machine may be used, as long as they provide safe operations.

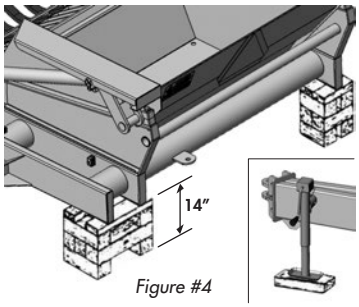

Figure #4

Check the hub spindles for transportation damage and/or paint excess and correct as required. Clean the inside of the frame spindle tubes and loosen/prepare the Spindle Hardware. Reference Figure #5.

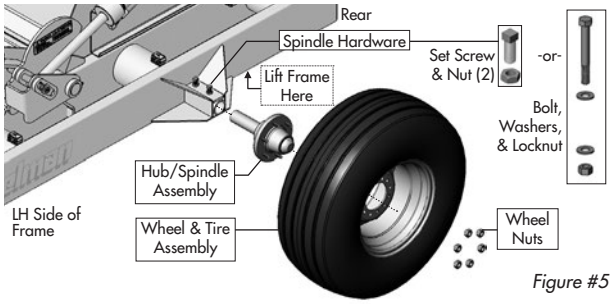

Figure #5

Fully insert the hub spindles into the frame spindle tubes and tighten the Spindle Hardware.

Then, install a rim and tire assembly to each spindle hub using six 9/16" Wheel Nuts *(Previously used: 9/16" x 1-1/16" wheel bolts)*.

Tighten the wheel nuts (*bolts*) to 120 Ft-lb torque.

Note: Figure #5 shows the left hand side hub and spindle assembly installation. The right hand side is symmetrical.

TRACTOR PREPARATION

Follow this procedure when selecting and preparing a tractor for use with the machine:

1. Use only a tractor of sufficient power and weight to adequately handle the machine.
2. It is not recommended to use a tractor that is equipped with duals. The right outer tire will drive over the rocks, push them into the ground and make them difficult to pick up with the grill.
3. It is recommended to pin the tractor draw bar totally offset to the right hand side, to allow the *picking grill* to clear the tractor wheels.
4. Use only a drawbar pin with provisions for a mechanical retainer such as a Klik pin. Always install the retainer.
5. Always attach a safety chain between the tractor and the machine to prevent unexpected separation.

WHEN CONNECTING HYDRAULICS:

- Use a clean cloth or paper towel to clean the hose couplers ends and also the area around the couplers on the tractor.

- Remove the plastic plugs from the couplers (if applicable) and insert the male ends.

- If the direction of motion is wrong after testing the controls, reverse the couplers.

Bleeding Hydraulics: *Occasionally air may become trapped in the hydraulic circuit, making it necessary to "bleed" the circuit. To perform this operation cycle the hydraulics several times* ***or****, especially on older tractors, temporarily loosen an easily accessible hose fitting enough to allow any trapped air to escape while cycling the hydraulics. Retighten fitting.*

⚠ **WARNING:** Use extreme care when working around a high pressure hydraulic system. Make sure all connections are tight and all components are in good repair. Wear hand and eye protection when searching for suspected leaks.



HOOK-UP / UNHOOKING

The Rock Picker should always be parked on a level, dry area that is free of debris and foreign objects. Follow this procedure when attaching:

1. Clear the area of bystanders. Remove foreign objects from machine and working area.
2. Start tractor and slowly back up to the hitch point.
3. Stop the tractor engine, place all controls in neutral, set park brake and remove ignition key before dismounting.
4. Use the hitch pole jack to raise or lower the pole to align with the drawbar. Ensure that the rock picker hitch pole is parallel to the ground. Refer to the "Hitch Clevis Adjustments" section if needed.
5. Install the drawbar pin (with a mechanical retainer, such as a Klik pin) and safety chain (between the tractor drawbar and the hitch pole). Raise the hitch jack and rotate it to its stowed position.
6. Connect the hydraulics.

   NOTE: Connect the hoses that operate the grill lifting cylinders to the hydraulic control operated nearest to the operator's seat, such that when the lever is moved forward, the grill will lower.
7. Check that the transport pins are removed before operation. If they are still installed, proceed to remove them. Refer to the "Removing Transport Pins" section if needed.
8. When unhooking from the tractor, reverse the above procedure.

HITCH CLEVIS ADJUSTMENTS

NOTE: Before adjusting, make sure the Prong Picker tires have the specified air pressure:

90 psi *(620 kPa)* / 12 ply tires
(Previous: 45 psi (310 kPa) / 8 ply tires)

The hitch pole should always be set to be parallel to the ground when attached to the tractor. To set this angle, follow this procedure:

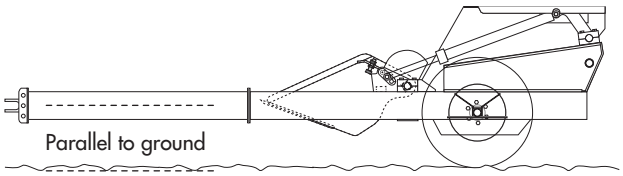

1. Clear the area of bystanders, especially small children.
2. Install the drawbar pin to attach the clevis to the tractor.
3. Use the hitch jack to lower the hitch and transfer the weight off the drawbar.
4. Step back and check to see if the pole is parallel to the ground.
5. If it isn't, use the jack to raise the pole and centre the clevis to the drawbar.
6. Remove the clevis mounting pin.
7. Move the clevis up or down as required.
8. Install the clevis mounting pin and retainer.
9. Lower the hitch and check the pole angle again.

⚠ **IMPORTANT:** *The machine operates at maximum efficiency when the hitch pole is parallel to the ground.*

REMOVING THE TRANSPORT PINS

Once the hydraulic system of the rock picker is operable, raise the *picker grill assembly* (1) until the slanted edge is in a horizontal position. Then block-up the grill as shown in Figure #6.

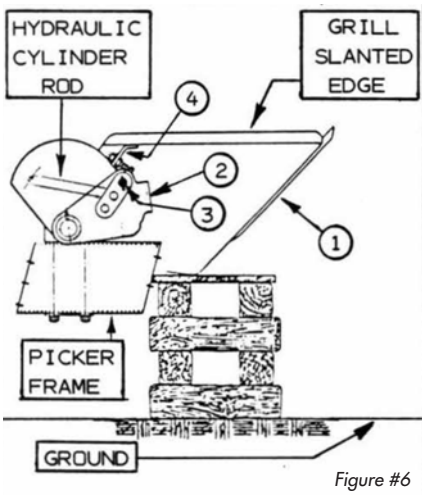

Figure #6

Operate the hydraulic control lever to produce a slight downward movement of the *grill hydraulic lift arms* (2), such that the *transport pins* (3) may be relieved from load applied by the *grill lift plate* (4). Reference Figure #6. Remove and keep *transport pins* (3) to use whenever required.

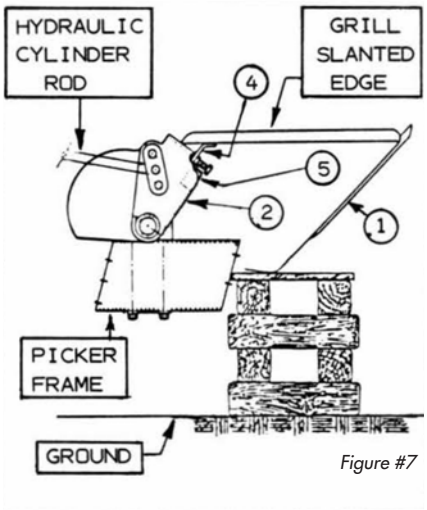

Figure #7

Raise the *hydraulic lift arms* (2) again, until the *hydraulic lift arm stop blocks* (5) contact the *grill lift plate* (4), as shown in Figure #7. Remove the wooden blocks from under the grill and lower the picker grill (1) to the ground.

Preparation

PRE-OPERATION CHECKLIST

⚠ **IMPORTANT:** Follow the pre-operational checklist for both your *personal safety* and for maintaining the proper mechanical condition of the machine.

Before operating this machine, the following areas should be checked off:

- ☐ 1. Only operate Rock Picker using a tractor of appropriate size, power and weight.
- ☐ 2. Pin the tractor draw bar totally offset to the right hand side, to allow the *picking grill* to clear the tractor wheels.
- ☐ 3. Use a proper drawbar pin with provisions for a mechanical retainer to hook the rock picker hitch pole clevis to the tractor draw bar. Make sure that a retainer such as a Klik pin is installed.
- ☐ 4. Ensure that the safety chain is installed on the hitch and the jack is placed in its stowed position.
- ☐ 5. Check tires and ensure that they are inflated to the specified pressure:
  90 psi (620 kPa) / 12 ply tires
  (Previous: 45 psi (310 kPa) / 8 ply tires)
- ☐ 6. Inspect all moving and rotating parts. Remove any debris that has become entangled in them.
- ☐ 7. Lubricate the machine and inspect all hydraulic lines, hoses, fittings and couplers for tightness/ leaks as outlined in the "Service & Maintenance Section". Follow proper safety procedures.

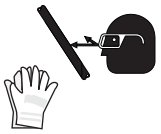

- ☐ 8. Check oil level in the tractor hydraulic reservoir. Top up as required.
- ☐ 9. Check that the transport pins are removed before operation. If they are still installed, proceed to remove them. Refer to the "Removing Transport Pins" section if needed.
- ☐ 10. Ensure grill tines will not be "digging" when picking. Make sure the grill depth stops have been properly set to prevent this. Refer to the "Grill Depth Control Stop Adjustment" section.

BREAK-IN

⚠ **IMPORTANT:** *It is extremely important to follow all of the **Break-In** procedures especially those listed in the "Before using" section below to avoid damage:*

Although there are no operational restrictions on the Rock Picker when it is new, there are some mechanical checks that must be done to ensure the long term integrity of the unit. When using the machine for the first time, follow this procedure:

Before using:

1. Read Safety Info. & Operator's Manual.
2. Complete steps in "Pre-Operation Checklist".
3. Lubricate all grease points.
4. Check all bolt tightness.

After operating for **2 hours**:

1. Re-torque wheel nuts/bolts.
2. Check all hardware. Tighten as required.
3. Check all hydraulic system connections. Tighten if any are leaking.
4. Tighten chain.

After operating for **8 hours**:

1. Repeat Steps for 2 hour Break-In above.
2. Go to the service schedule as outlined in the "Service & Maintenance" section.

OPERATOR'S RESPONSIBILITY

Every operator should read this manual and be instructed in safe operating procedures. An untrained operator is not qualified to operate this machine and could place themselves or bystanders in danger.

⚠ OPERATING SAFETY

Before Operating:

- **Read** and understand the **Operator's Manual** and all safety signs before using.
- Keep hands, feet, hair and clothing away from all moving and/or rotating parts.
- Do not allow riders on the Rock Picker or tractor during operation or transporting.
- Keep all shields and guards in place when operating.
- Clear the area of all bystanders, especially children, before starting.
- Do not operate machine or raise hopper box on steep side hills or slopes.
- If the ground surface is bumpy, do not load the machine too heavy and reduce travel speed.
- When performing the lifting and dumping operations with the hopper box, do not allow anybody to stand close by.
- Frequently check and retighten bolts to specified torques shown in the "Service & Maintenance" section.
- Also, review and be familiar with the other safety sections such as Maintenance and Transport Safety found in this manual.

GRILL DEPTH CONTROL STOP ADJUSTMENT

- Before attempting a final adjustment for the grill depth control stop, it is very important to set the hitch pole first, whether at the hitch pole clevis or at the tractor drawbar, to get the hitch pole parallel to the ground level.
- Make sure the rock picker tires have the specified air pressure (45 psi) before adjusting.
- The grill depth final adjustment should be such that the toe of the grill tines, would skim the ground and at the same time, the heel of the grill tines should be about 1/2" above the ground level.

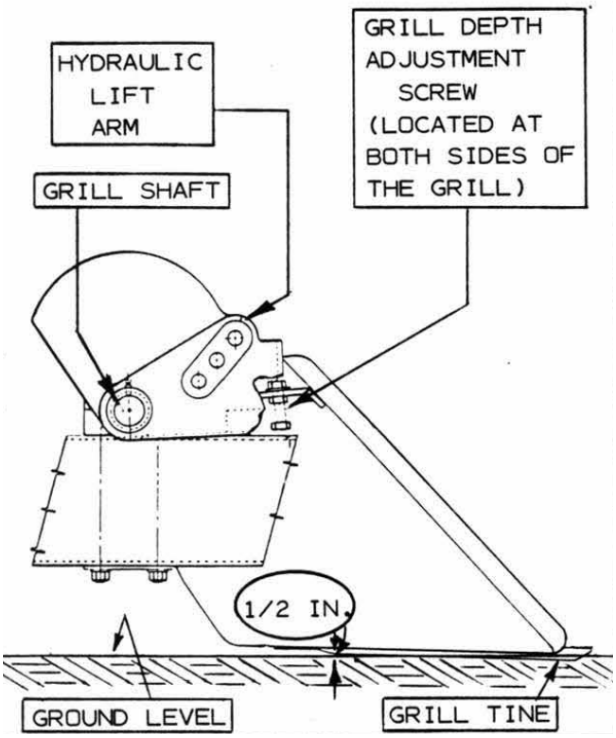

FIELD OPERATIONS

Refer to these operational hints before starting:

- Begin rock picking operations and observe the machine's performance regarding the particular field conditions before attempting any adjustments.
- Ensure grill tines are not "digging" when picking. Make sure the grill depth stops have been properly set to prevent this. (Refer to the Grill Depth Control Stop Adjustment Section)
- On new machines, it is advisable to make a complete check after one or two hours of operation. Verify that all fasteners are tight enough, especially wheel bolts and set screws. Also, recheck that adjustments are maintained as set.
- Remember that rock pickers are designed and built to remove rocks and other debris from the ground surface, but not to pull out buried material.
- The best rock picking conditions are when the rocks lay on the ground surface and it is reasonably firm and dry.
- If the ground surface is bumpy, do not load the machine too heavy and reduce machine's travel speed.
- The hitch pole clevis is normally located in the hitch pole bracket centre position. This setting allows the rock picker frame and pole assembly to ride parallel to the ground. However, if the soil is found to be rather soft, adjust the clevis casting at the hitch pole brackets, such that the frame and pole assembly would be levelled to the ground.
- For information regarding component adjustments, make reference to the adjustment procedures section.

LOADING/DUMPING:

Loading: The machine can be loaded until the hopper box is filled but do not overfill. If hopper box is overfilled, rocks may roll forward and fall in between the frame when dumping.

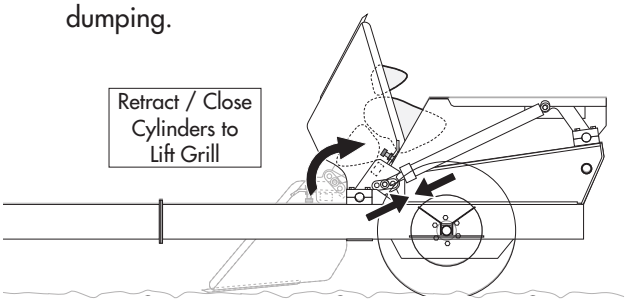

Dumping: The hopper box is unloaded by fully extending the cylinders.

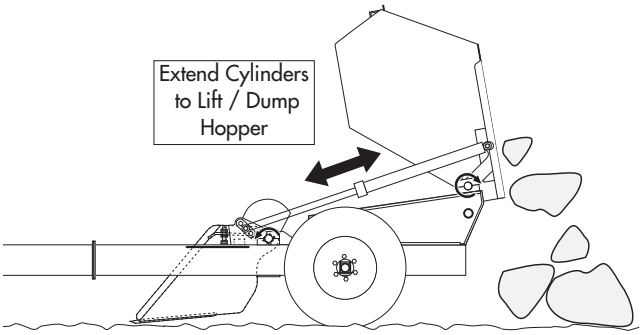

NOTE: Be carefull if hopper box is overfilled! If hopper box is overfilled, rocks may roll forward and fall in between the frame when dumping.

⚠ **WARNING:** *Stay clear of the machine and surrounding area when unloading. Keep others away.*

⚠ **WARNING:** *Ensure there are no obstructions below the grill area or the side cylinder lift bracket areas when dumping.*

- Be sure the machine is on level ground when raising the hopper box to unload. Uneven ground conditions can cause the box to tilt and could be dangerous or result in damage to the machine.
- Ensure there are no obstructions below the grill/grate area or the side cylinder lift bracket area when dumping. Obstructions in these areas can cause extreme loading on pins and brackets due to over-extension of the cylinders and result in damage to the machine.

⚠ TRANSPORT SAFETY

- Read and understand ALL the information in the Operator's Manual regarding procedures and SAFETY when operating the Rock Picker in the field/yard or on the road.
- Check with local authorities regarding machine transport on public roads. Obey all applicable laws and regulations.
- Always travel at a safe speed. Use caution when making corners or meeting traffic.



- Make sure the SMV (Slow Moving Vehicle) emblem and all the lights and reflectors that are required by the local highway and transport authorities are in place, are clean and can be seen clearly by all overtaking and oncoming traffic.
- Keep to the right and yield the right-of-way to allow faster traffic to pass. Drive on the road shoulder, if permitted by law.
- Always use hazard warning flashers on tractor when transporting unless prohibited by law.
- Always use a pin with provisions for a mechanical retainer and a safety chain when attaching to a tractor or towing vehicle.
- When transporting the rock picker on roads or highways, reverse the hitch pole offset position towards the machine's center line.
- Ensure the red transport pins are in transport position and the hitch pole is fully secured before moving on a public road.
- Maintain a safe speed. Do not exceed 32 kph (20 mph). Slow down when cornering and on rough roads.

TRANSPORTING

Follow this procedure when preparing to transport:

1. Clear the area of bystanders, especially small children, before converting into transport configuration.
2. Always install the transport pins. Raise the grill to its highest position and install the red transport pins into transport position and secure. Lower the grill to rest on the red pins.
3. Rotate hitchpole jack out of the way and secure with chained pin.
4. Reverse the hitch pole offset position towards the machine's center line, when transporting the rock picker on roads or highways.
5. Clean the SMV, lights and reflectors.
6. Maintain a safe speed. Do not exceed 32 kph (20 mph). Slow down when cornering and on rough roads.
7. Slow down and pull off to the side of the road when meeting other traffic.
8. Use hazard flashers on tractor unless prohibited by law.



Storage

⚠ STORAGE SAFETY

- Store unit in an area away from human activity.
- Store Rock Picker only with grill and hopper box lowered.
- Do not permit children to play around the stored unit.

STORAGE

After the season's use, completely inspect all major systems of the machine. Repair or replace any worn or damaged components to prevent unnecessary down time at the beginning of next season.
Since the unit can be used in extremely adverse conditions during the season, the machine should be carefully prepared for storage to ensure that all dirt, mud, debris and moisture has been removed.

Follow this procedure when preparing to store:

1. Wash the entire machine thoroughly using a water hose or pressure washer to remove all dirt, mud, debris or residue.
2. Inspect all moving or rotating parts to see if anything has become entangled in them. Remove the entangled material.
3. Lubricate all grease fittings to remove any moisture in the bearings.
4. Inspect all hydraulic hoses, fittings, lines, couplers and valves. Tighten any loose fittings. Replace any hose that is badly cut, nicked or abraded or is separating from the crimped end of the fitting.
5. Touch up all paint nicks and scratches to prevent rusting.
6. Oil the exposed rams on the hydraulic cylinders to prevent rusting.
7. Select an area that is dry, level and free of debris.

⚠ SAFETY DECALS

Some or all of the following safety decals may be found at strategic locations on this machine. These decals are installed with the purpose of alerting everyone of potential danger or damage.

- Keep safety decals and signs clean and legible at all times.
- Replace safety decals and signs that are missing or have become illegible.
- Replaced parts that displayed a safety sign should also display the current sign.
- Safety decals or signs are available from your Dealer Parts Department. Safety decals will be available upon request.



This Danger Decal (142255) is located on the hopper box side panels as well as at the back panel.

The purpose of the decal is to prevent everyone from being near the machine when in operation.

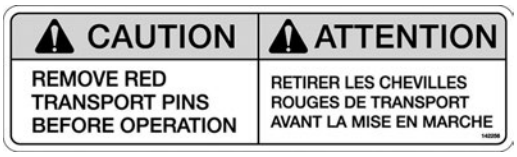

This Cautionary Decal (142256) is attached to the front side of both grill hydraulic lift arms.

The purpose of the decal is to remind the operator to remove the transport pins after the machine is transported to the field, and before the grill is lowered to pick rocks.

REPLACEMENT DECALS AND REFLECTORS

PART NO.	DESCRIPTION	QTY.
142255	Decal, Danger - Keep Safe Distance	3
142256	Decal, Caution - Remove Transport Pin	2
142220	Decal, Warning - Do Not Exceed	1
142008	Decal, Degelman - 6 x 25-3/4	1
142556	Decal, Red Reflector - 2 x 9	2
142557	Decal, Amber Reflector - 2 x 9	2
142650	Decal, Fluorescent Reflector - 2 x 9	2
142156	Decal, Slow Moving Vehicle	1

⚠ MAINTENANCE SAFETY

- Review the Operator's Manual and all safety items before working with, maintaining or operating the Rock Picker.
- Lower grill and hopper box, stop the tractor engine, place all controls in neutral, set park brake, and remove ignition key before servicing, adjusting, repairing or unplugging.
- Keep hands, feet, clothing and hair away from all moving and/or rotating parts.
- Clear the area of bystanders, especially children, when carrying out any maintenance and repairs or making adjustments.
- Place safety stands or large blocks under the frame before removing tires or working beneath the machine.
- Be careful when working around or maintaining a high-pressure hydraulic system. Wear proper eye and hand protection when searching for a high-pressure hydraulic leak. Use a piece of wood or cardboard as a backstop when searching for a pin hole leak in a hose or a fitting.

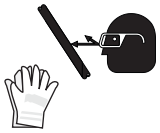

- Always relieve pressure before disconnecting or working on hydraulic system.
- Use a long pole or bar to dislodge material from paddles or grill. Pressure in hydraulic system and paddle spring tension can cause paddles to kick back if they are jammed.
- When a guard is opened or removed for servicing, be sure to install or close it before starting.

⚠ HYDRAULIC SAFETY

1. Always place all tractor hydraulic controls in neutral before dismounting.
2. Make sure that all components in the hydraulic system are kept in good condition and are clean.
3. Replace any worn, cut, abraded, flattened or crimped hoses and metal lines.
4. Do not attempt any makeshift repairs to the hydraulic lines, fittings or hoses by using tape, clamps or cements. The hydraulic system operates under extremely high-pressure. Such repairs will fail suddenly and create a hazardous and unsafe condition.
5. Wear proper hand and eye protection when searching for a high-pressure hydraulic leak. Fluid escaping from a very small hole can be almost invisible. Use a piece of wood or cardboard as a backstop instead of hands to isolate and identify a leak.



6. If injured by a concentrated high-pressure stream of hydraulic fluid, seek medical attention immediately. Serious infection or toxic reaction can develop from hydraulic fluid piercing the skin surface.
7. Before applying pressure to the system, make sure all components are tight and that lines, hoses and couplings are not damaged.

• Think SAFETY! Work SAFELY

⚠ TIRE SAFETY

1. Failure to follow proper procedures when mounting a tire on a wheel or rim can produce a blow out which may result in serious injury or death.
2. Do not attempt to mount a tire unless you have the proper equipment and experience to do the job.
3. Have a qualified tire dealer or repair serviceman perform required tire maintenance.

TORQUE SPECIFICATIONS

CHECKING BOLT TORQUE



The tables shown below give correct torque values for various bolts and capscrews. Tighten all bolts to the torques specified in chart unless otherwise noted. Check tightness of bolts periodically, using bolt torque chart as a guide. Replace hardware with the same strength (Grade/Class) bolt.

IMPERIAL TORQUE SPECIFICATIONS

(based on "Zinc Plated" values)



Size	SAE-5 Grade 5	SAE-8 Grade 8
	lb.ft (*N.m*)	lb.ft (*N.m*)
1/4"	**7 (*10*)**	**10 (*14*)**
5/16"	15 (*20*)	20 (*28*)
3/8"	**25 (*35*)**	**35 (*50*)**
7/16"	40 (*55*)	60 (*80*)
1/2"	**65 (*90*)**	**90 (*120*)**
9/16"	90 (*125*)	130 (*175*)
5/8"	**130 (*175*)**	**180 (*245*)**
3/4"	230 (*310*)	320 (*435*)
7/8"	**365 (*495*)**	**515 (*700*)**
1"	550 (*745*)	770 (*1050*)
1-1/8"	**675 (*915*)**	**1095 (*1485*)**
1-1/4"	950 (*1290*)	1545 (*2095*)
1-3/8"	**1250 (*1695*)**	**2025 (*2745*)**
1-1/2"	1650 (*2245*)	2690 (*3645*)

METRIC TORQUE SPECIFICATIONS

(based on "Zinc Plated" values)



Size	Class 8.8	Class 10.9
	lb.ft (*N.m*)	lb.ft (*N.m*)
M6	**7 (*10*)**	**10 (*14*)**
M8	16 (*22*)	23 (*31*)
M10	**30 (*42*)**	**45 (*60*)**
M12	55 (*75*)	80 (*108*)
M14	**90 (*120*)**	**125 (*170*)**
M16	135 (*185*)	195 (*265*)
M18	**190 (*255*)**	**270 (*365*)**
M20	265 (*360*)	380 (*515*)
M22	**365 (*495*)**	**520 (*705*)**
M24	460 (*625*)	660 (*895*)
M27	**675 (*915*)**	**970 (*1315*)**
M30	915 (*1240*)	1310 (*1780*)
M33	**1250 (*1695*)**	**1785 (*2420*)**
M36	1600 (*2175*)	2290 (*3110*)

HARDWARE/HOSE SPECIFICATIONS

Unless otherwise stated:

- Hardware - Hex, Plated GR5 UNC or P8.8 (metric)
- Hydraulic Hoses - 3/8 & 1/2, ends come with 3/4 JIC female swivel.



HYDRAULIC FITTING TORQUE

Hydraulic Fitting Torque*

Size	lb.ft (N.m)
1/2	34 (46)
3/4	75 (100)
7/8	90 (122)

* The torque values shown are based on lubricated connections as in reassembly.

Tightening Flare Type Tube Fittings

1. Check flare and flare seat for defects that might cause leakage.
2. Align tube with fitting before tightening.
3. Lubricate connection and hand tighten swivel nut until snug.
4. To prevent twisting the tube(s), use two wrenches. Place one wrench on the connector body and with the second tighten the swivel nut to the torque shown.

WHEEL NUT & WHEEL BOLT TORQUE

Wheel Nut/Bolt Torque

Size	lb.ft (N.m)
9/16	120-130 (165-175)

Bolt Patterns

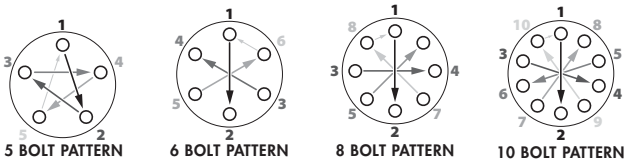

Wheel Tightening Procedure

1. Install and **hand tighten** nuts/bolts.
2. Tighten to approx **20% Torque** value using the 10 Bolt **Star or CrissCross** pattern shown above.
3. Tighten to **Full Torque** value using the **Star or CrissCross** pattern.
4. If applicable, install **Rear Locknuts** using **Wheel Torque Values**.

SERVICE INTERVALS

Due to the wide range of operational conditions that the machine will be subjected, it is difficult and rather complex to specify maintenance requirements for a given timing. Therefore, the following maintenance recommendations are to be only a guide. Frequencies and requirements may be varied to suit local needs.

LUBE AFTER EVERY 8 HRS.

8 Hrs.

grease hyd lift arms - 2 locations
grease bearing blocks - 2 locations
grease cylinder pins - 4 pins
check for hydraulic fluid leaks - general
check for damaged hoses - general
check tire pressure:
12.5L x15 - 12 PLY: ***90 PSI (620 kPa)***
Previous: 8 PLY - ***45 PSI (310 kPa)***

Monthly

check wheel rim bolts tightness - both sides
check grill tine bolts tightness - general
check bearing blocks condition - 4 locations
check grill tine wear / shape - general
check all hardware/bolt tightness - general

Annually / Beginning of Season

grease wheel hub nipple - 2 locations
check/repack wheel bearings - 2 locations
(use a good grade of bearing grease)

FLUIDS AND LUBRICANTS

1. Always use clean hydraulic fluid and periodically check for leaks.
2. Grease: Use an SAE multi-purpose grease with extreme pressure (EP) performance. Also acceptable is an SAE multi-purpose lithium base grease.
3. Storing Lubricants: Your machine can operate at top efficiency only if clean lubricants are used. Use clean containers to handle all lubricants. Store them in an area protected from dust, moisture and other contaminants.

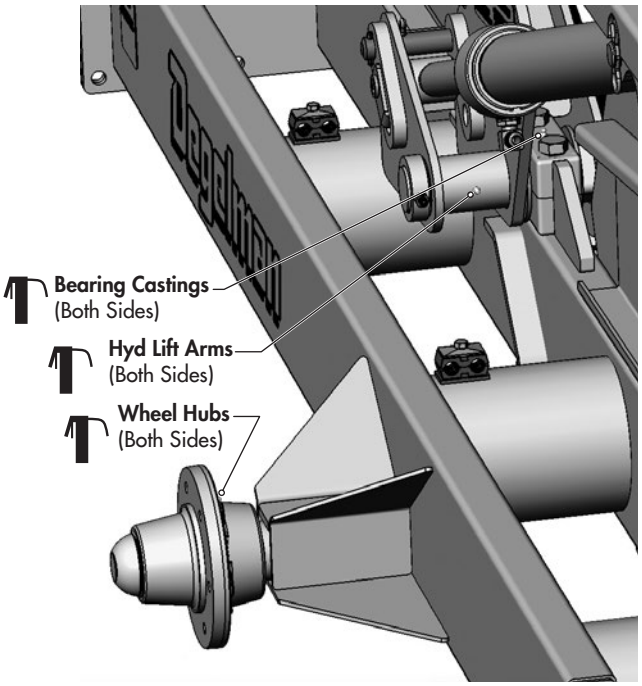

GREASING

1. Use only a hand-held grease gun for all greasing.
2. Wipe grease fitting with a clean cloth before greasing, to avoid injecting dirt.
3. Replace and repair broken fittings immediately.
4. If fittings will not take grease, remove and clean thoroughly. Also clean lubricant passageway. Replace fitting if necessary.
5. Inject grease until you see grease being expelled from the bearing or bushing areas.

⚠ **WARNING:** Use extreme care when working around a high pressure hydraulic system. Make sure all connections are tight and all components are in good repair. Wear hand and eye protection when searching for suspected leaks.



HYDRAULIC CYLINDER REPAIR

PREPARATION

When cylinder repair is required, clean off unit, disconnect hoses and plug ports before removing cylinder.

When removed, open the cylinder ports and drain the cylinder's hydraulic fluid.

Examine the type of cylinder. Make sure you have the correct tools for the job.

You may require the following tools:

- *Proper **Seal Kit***
- *Rubber Mallet*
- *Screwdriver*
- *Punch*
- *Pliers*
- *Emery cloth*
- *Torque Wrench*

Types of Cylinders
(Wire Ring / Threaded Head)

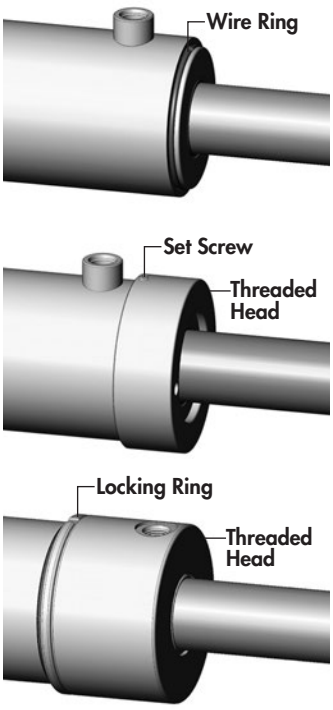

REPAIRING A WIRE RING CYLINDER

1. Retract the rod assembly.
2. Remove the external steel wire ring.

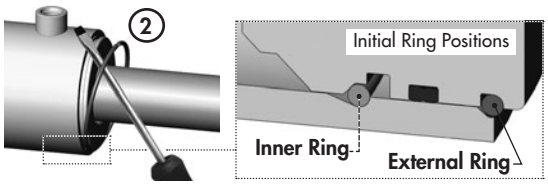

3. Remove any dirt that may have accumulated on the cylinder head.
4. Using the mallet and punch, push the head into the cylinder tube until the internal tube groove is fully exposed. This will also move the internal wire ring into its removal position.

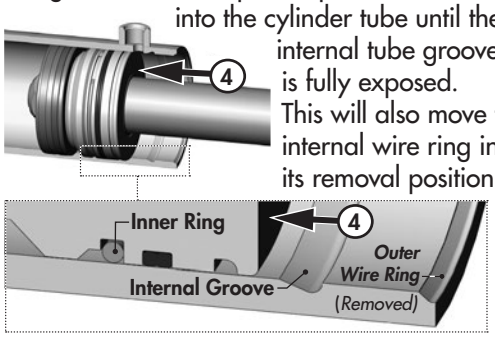

5. Take the plastic removal ring from the seal kit:
   a) Straighten the ring and remove any kinks or excessive curl to make installation easier and prevent it from falling out.
   b) Insert the removal ring into the internal groove with the feathered end pointing into the tube.

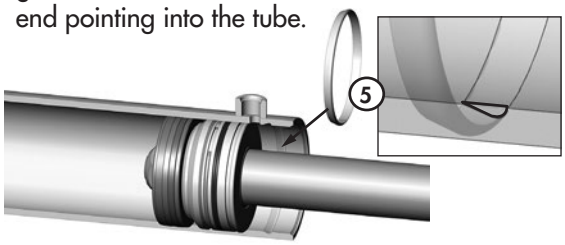

   c) Use a screwdriver or a finger to hold one end of the ring in the groove while fitting the other end of the ring into the groove. The tips should snap in together. Ensure it is secure and fully seated before the next step.

   IMPORTANT: It is important to e*nsure the removal ring is completely in the groove before pulling the rod out. If the ring sticks out it will get stuck between the head and tube.*

6. a) Extend the rod to pull head out of tube. If the rod does not pull out easily, push the head back in and ensure the ring is properly in the groove. Replace ring if necessary.

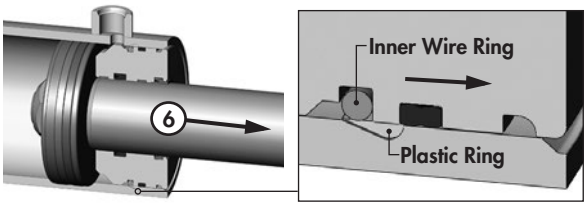

   Note: *Excessive force will not overcome a jammed ring and could damage the cylinder.*
   b) Completely remove rod and head from tube.

7. Remove plastic removal ring from the cylinder tube.

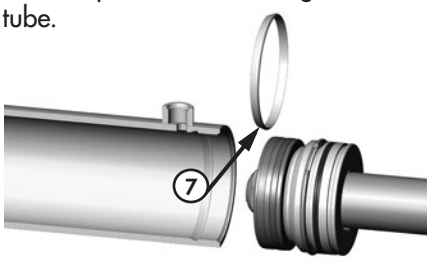

8. Remove locknut, piston and head from rod.

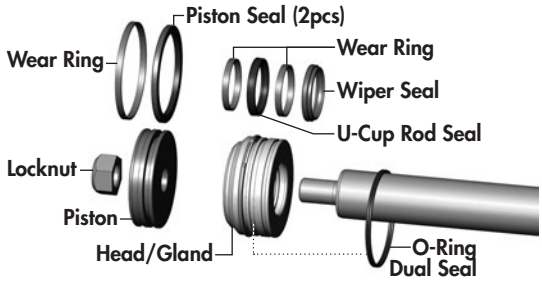

9. a) Inspect and replace all of the seals with new components.

   b) Inspect the inside of the cylinder barrel, piston, rod and other polished parts for burrs and scratches. Smooth areas as needed with an emery cloth.

   c) During re-assembly of head/gland assembly, leave the outer O-Ring Dual Seal loose on the rod to re-install at a later step.

10. Replace piston and torque the locknut to required value. (Refer to chart below)

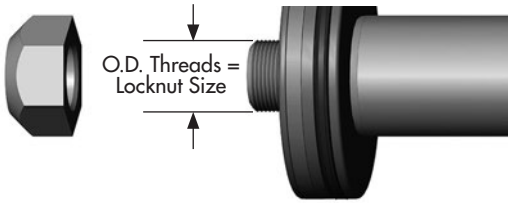

LOCKNUT SIZE (PISTON)	TORQUE VALUE
3/8 - 24 UNF	25-30 lb.ft (35-42 *N.m*)
1/2 - 20 UNF	**40-60 lb.ft *(55-80 N.m)***
5/8 - 18 UNF	95-105 lb.ft (130-140 *N.m*)
3/4 - 16 UNF	**175-225 lb.ft *(240-305 N.m)***
7/8 - 14 UNF	200-275 lb.ft (270-370 *N.m*)
1 - 14 UNF	**300-380 lb.ft *(405-515 N.m)***
1 1/8 - 12 UNF	400-500 lb.ft (540-675 *N.m*)
1 1/4 - 12 UNF	**500-600 lb.ft *(675-810 N.m)***
1 1/2 - 12 UNF	700-800 lb.ft (950-1085 *N.m*)
1 3/4 - 12 UNF	**800-900 lb.ft *(1085-1220 N.m)***

11. a) Install the supplied band clamp to compress the inner wire ring on the head/gland assembly so it will fit into the tube.

    Note: Make sure the cam of the band clamp is not overtop of the gap in the ring.

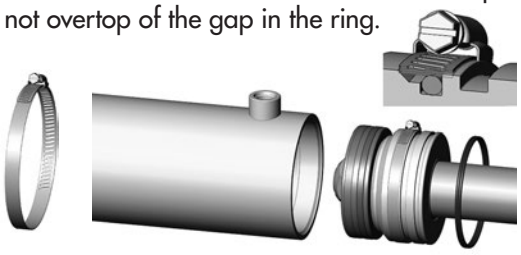

11. b) Tighten the band clamp to ensure the wire ring is fully seated. Then, loosen the clamp approx. 1/2 a turn to allow band clamp to slide during final assembly.

12. Lubricate the cylinder tube and piston seals.

13. Insert the piston into the tube. Tap the cylinder head into the tube until the clamp slides over and the inner wire ring is inside the tube.

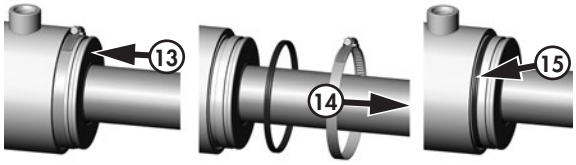

14. Loosen the clamp and remove.

15. Install the O-Ring Dual seal.

16. Tap the head the rest of the way until the end is flush with the tube.



IMPORTANT: The head/gland must be inserted until it is flush with the tube to allow the inner wire ring to snap into its seated position in the internal cylinder groove. Failure to insert the head flush as shown will result in the head and rod assembly coming out of the tube when pressure is applied to the cylinder.

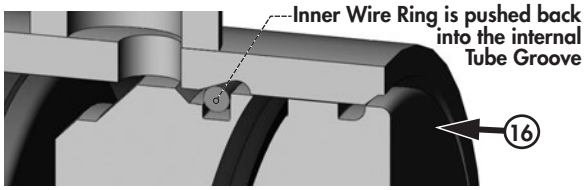

17. Pull the rod out to expose the external wire ring groove in cylinder head, and then install the external ring.

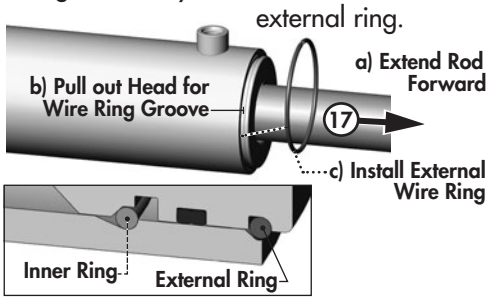

18. Before using the cylinder, ensure that you double check your work.

REPAIRING A THREADED HEAD CYLINDER

Set Screw Style

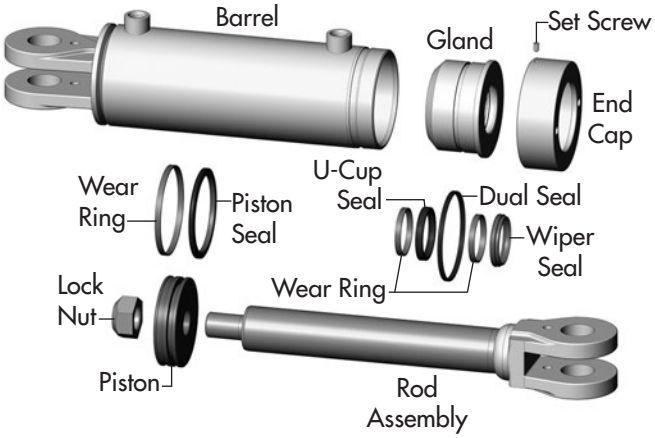

DISASSEMBLY

1. Loosen Set Screw and turn off end cap.
2. Carefully remove piston/rod/gland assemblies.
3. Disassemble the piston from the rod assembly by removing lock nut.

NOTE: *DO NOT* clamp rod by chrome surface.

4. Slide off gland assembly & end cap.
5. Remove seals and inspect all parts for damage.
6. Install new seals and replace damaged parts with new components.
7. Inspect the inside of the cylinder barrel, piston, rod and other polished parts for burrs and scratches. Smooth areas as needed with an emery cloth.

REASSEMBLY

1. Reinstall rod through end cap & gland assembly.
2. Secure piston to rod with lock nut. Torque lock nut to proper value (refer to chart on previous page for proper torque value).
3. Lube inside of barrel, piston seals, and gland seals with hydraulic oil.
4. With cylinder body held gently in a vise, insert piston, gland, end cap and rod combination using a slight rocking motion.
5. Apply Loctite anti-seize before installing cylinder end cap.
6. Torque cylinder end cap to 440 lb.ft (600 N.m).
7. Tighten Set Screw on end cap to 6 lb.ft (8 N.m).

REPAIRING A THREADED HEAD CYLINDER

Locking Ring Style

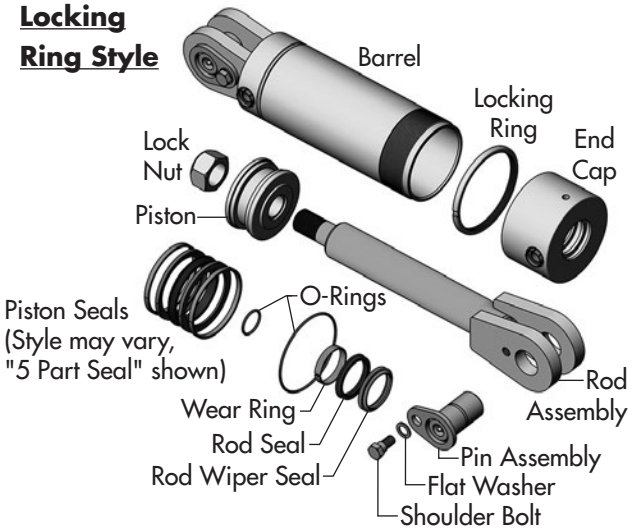

DISASSEMBLY

1. Loosen Locking Ring and turn off end cap.
2. Carefully remove piston, rod and end cap.
3. Disassemble the piston from the rod assembly by removing lock nut.

NOTE: *DO NOT* clamp rod by chrome surface.

4. Slide off end cap.
5. Remove seals and inspect all parts for damage.
6. Install new seals and replace damaged parts with new components.
7. Inspect the inside of the cylinder barrel, piston, rod and other polished parts for burrs and scratches. Smooth areas as needed with an emery cloth.

REASSEMBLY

1. Reinstall rod through end cap.
2. Secure piston to rod with lock nut. Torque lock nut to proper value (refer to chart on previous page for proper torque value).
3. Thread lock ring fully onto barrel.
4. Lube inside of barrel and piston seals with hydraulic oil.
5. With cylinder body held gently in a vise, insert piston, end cap and rod combination using a slight rocking motion.
6. Turn end cap fully against lock ring then back off end cap to align ports.
7. Tighten Locking Ring against end cap using a punch and hammer.

WHEEL HUB REPAIR

⚠ **IMPORTANT:** *Be sure to block up unit securely before removing tires.*

DISASSEMBLY

1. Carefully pry off dust cap.
2. Remove cotter pin from nut.
3. Remove nut and washer.
4. Pull hub off spindle, being careful to catch the outer roller bearing cone.
5. Place removed parts on a clean bench or tray.
7. Using a bar of bronze or a similar soft material, tap carefully to dislodge the inner cone bearing and dust seal.
8. Inspect cups that are press fitted into hub for pits or corrosion and remove if necessary.
9. Inspect and replace defective parts with new ones.

ASSEMBLY

1. If cups need replacing, be careful to install them gently and evenly into hub until they are fully seated.
2. Apply a thick wall of grease inside hub. Pack grease in cones.
3. Install dust seal as illustrated, and inner cone.
4. Position hub onto spindle and fill surrounding cavity with grease.
5. Assemble outer cone, washer and nut.
6. Tighten nut while rotating hub until there is a slight drag.
7. Turn nut back approximately 1/4 turn to align cotter pin hole with notches on nut. Note: Hub should rotate freely. If not, repeat step 6.
8. Install cotter pin and bend legs sideways over nut.
9. Fill dust cap half full of grease and gently tap into position.
10. Pump grease into hub through grease fitting until lubricant can be seen from dust seal.

COMMON SPINDLE AND HUB COMPONENTS

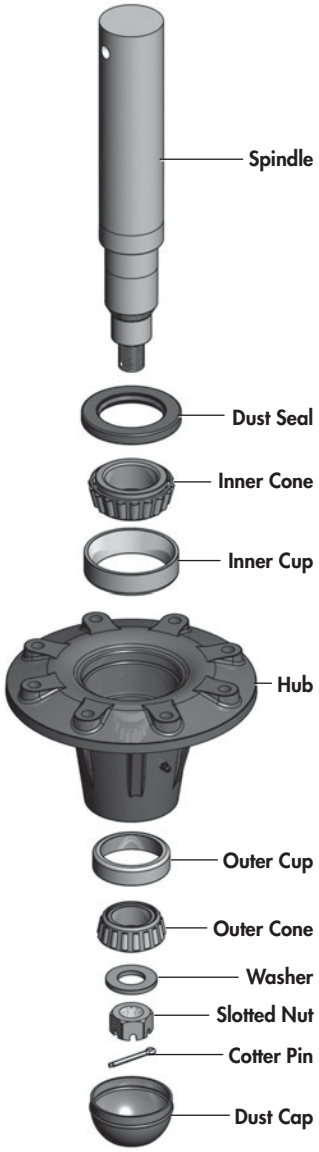

REPLACING THE GRILL TINES

The grill tines (2) can be replaced with new ones.

• It will be necessary to remove all the 5/8" x 3" hex bolts (5), lock washers and hex nuts which support the grill tine holder bar (4) and the grill tine spacer blocks (3)

• then, the grill tines requiring replacement may be individually disconnected from the grill by removing their 5/8" x 2-1/2" attaching hex bolt (6), flat washer (7) and lock nut (8)

NOTE: The tines located against the grill sides are not removable. However, wear may be compensated with arc welding.

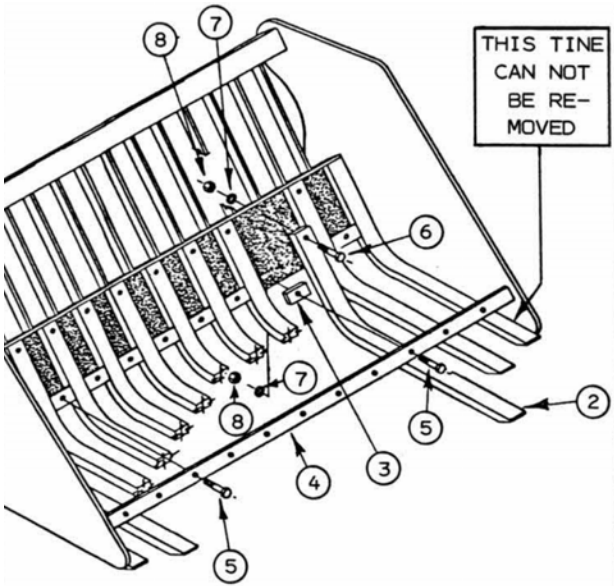

• Once the replacement grill tines are in place secure each with a 5/8" x 2-1/2" hex bolt (6) flat washer, (7) and lock nut (8) but do not tighten.

• Install a tine spacer block (3) between the grill tines.

• Install the grill tine holder bar (4) and secure with 5/8" x 3" hex bolts (5), flat washers, and lock nuts at each hole, making sure that each spacer block was inserted by the corresponding hex bolt.

• Tighten hex bolts (5) first to 110 ft-lb. and then second hex bolts (6) to same torque (110 ft-lb).

NOTE: Frequently check and retighten bolts to specified torques shown (110 ft-lb).

GRILL SHAFT LOCKING COLLAR ADJUSTMENT

• The locking collars located at both ends of the grill shaft should only be fitted snug, allowing the hydraulic lift arms to move free. Keep the locking collar set screws and jam nuts tight.

• The grill shaft has four spacer washers which may eventually show some wear due to thrust. Replace these spacer washers when significant wear is visible.

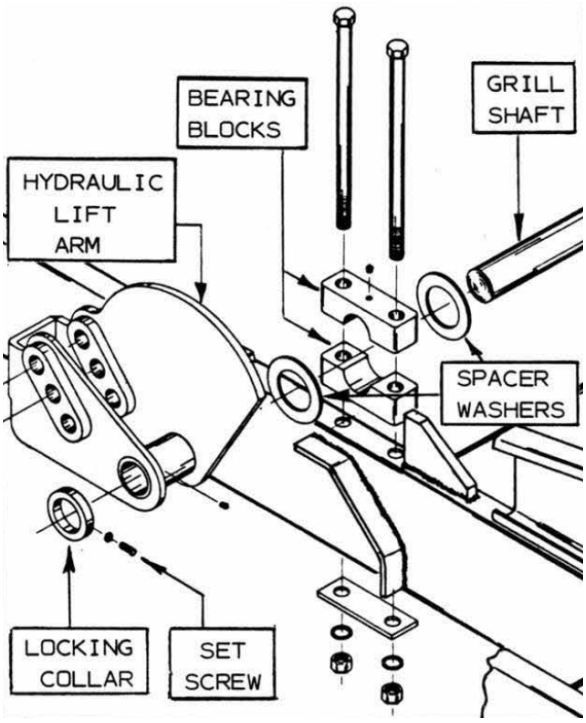

GRILL DEPTH CONTROL STOP ADJUSTMENT

• Before attempting a final adjustment for the grill depth control stop, it is very important to set the hitch pole first, whether at the hitch pole clevis or at the tractor drawbar, to get the hitch pole parallel to the ground level.

• Make sure the rock picker tires have the specified air pressure (45 psi) before adjusting.

• The grill depth final adjustment should be such that the toe of the grill tines, would skim the ground and at the same time, the heel of the grill tines should be about 1/2" above the ground level.

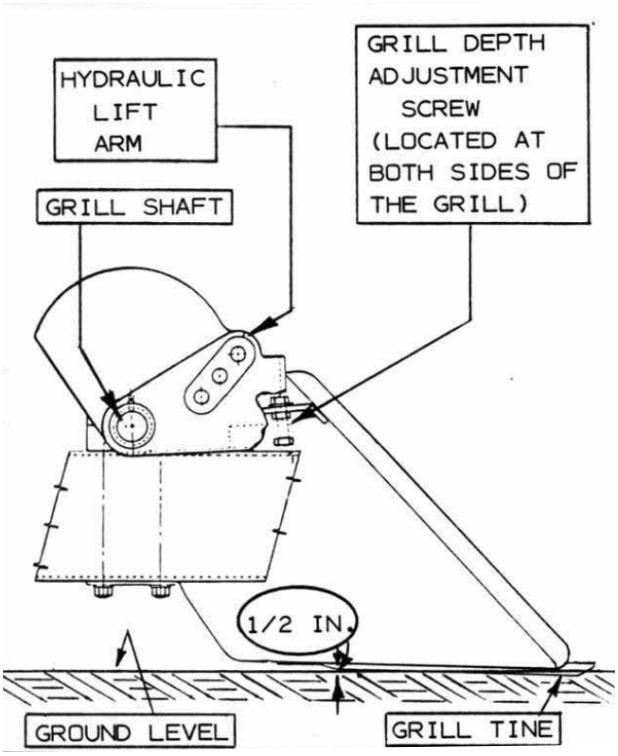

CYLINDER ROD END / LIFT ARM SETTING

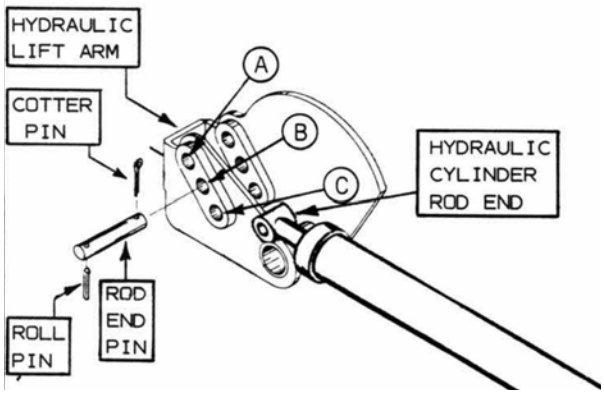

• When locating the rod end in position "A", the lifting capacity of the grill will increase, but the lifting speed will be reduced.

• When choosing the position "C", the lifting speed would be increased. But the lifting capacity would be reduced.

• Position "B" is an intermediate of the above described positions.

Troubleshooting

GENERAL TROUBLESHOOTING

In the following section, we have listed some of the problems, causes, and solutions that you may encounter. If you encounter a problem that is difficult to solve, even after having read through this troubleshooting section, please call your local dealer or distributor. Before you call, have this manual and the serial number from your unit ready.

SYMPTOM	PROBLEM	SOLUTION
Grill creeps down during operation.	Damaged hose or loose fittings.	Search for leaks with a piece of paper (not by hand) and repair.
	Hydraulic cylinder leak.	Replace seals or damaged components.
	Tractor hydraulic leak.	To verify, raise grill, disconnect at tractor and observe if grill creeps down. If not, repair tractor hydraulics.
Grill lifting too slowly.	Hydraulic cylinder rods not positioned correctly at lifting arms..	Adjust to achieve proper lifting speed.
	Hydraulic cylinders have internal leaks	Replace piston seals.
Loaded box will not lift for dumping.	Restriction in hose.	Disconnect & blow out lines with compressed air.
	External hydraulic leak.	Repair as needed.
Oil accumulation on cylinder shaft.	Hydraulic cylinder leak.	Replace seals or damaged components.
	Oil bypassing seals.	Seal manufacturer advises that small amounts of oil getting past seals is desirable. If problem becomes excessive, replace seals.
Excessive picking of dirt.	Grill set to low.	Raise grill by adjusting grill depth adjusting screw.
	Excess field trash.	
Will not lift large rocks.	Exceeding lifting capabilities of hydraulic cylinders.	Pin Hydraulic Cylinder into top hole of lifting arm.
	Hydraulic Cylinder internal leaks.	Replace piston seals.
	Poor tractor hydraulic system.	Check and repair.
Grill will not lay flat on the ground.	Soft ground.	Adjust grill depth.
	Incorrect tire pressure.	Inflate to or 90 psi (620 kPa)/12ply tire or 45 psi (310 kPa)/8ply.
Box & Grill will not lift.	Crossed hoses.	Connect in proper sequence.

GENERAL OVERVIEW

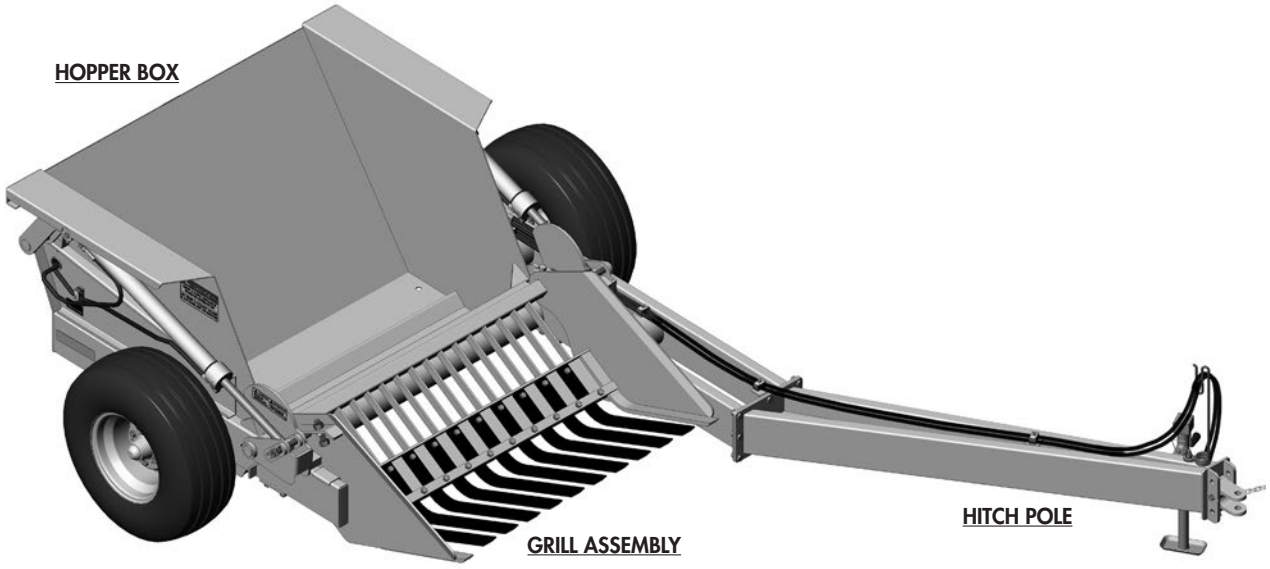

HITCH POLE COMPONENTS

Long Pole - Standard
Short Pole - *Alternate/Previous*

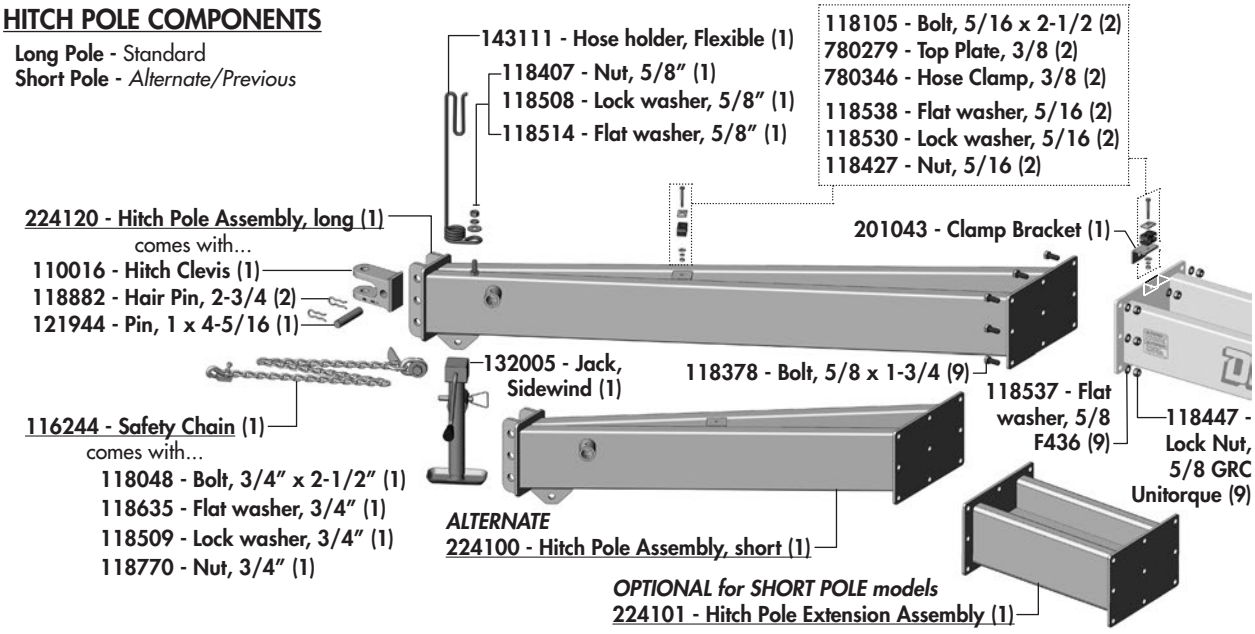

HOPPER BOX & GRILL COMPONENTS

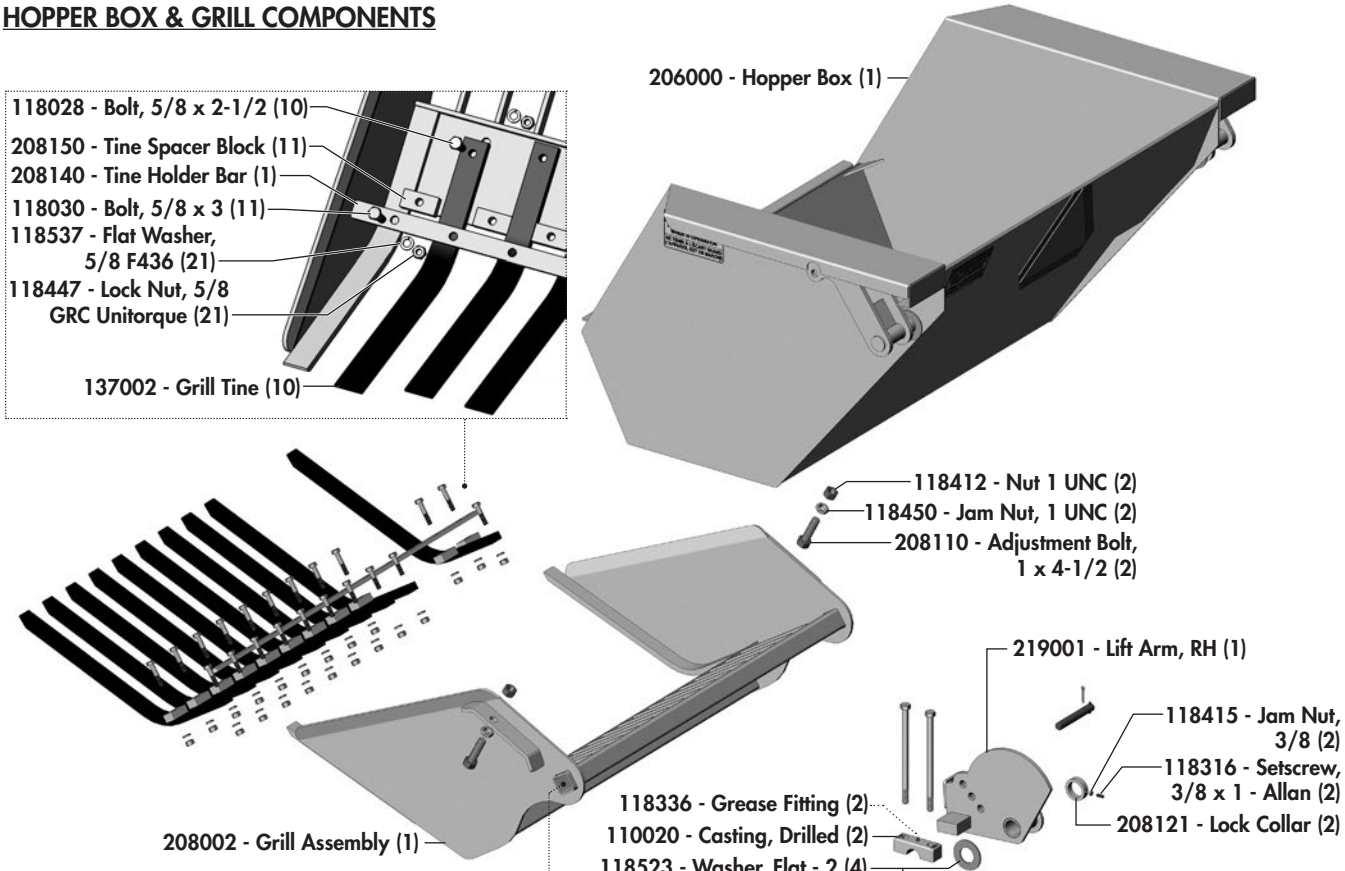

MAIN FRAME COMPONENTS

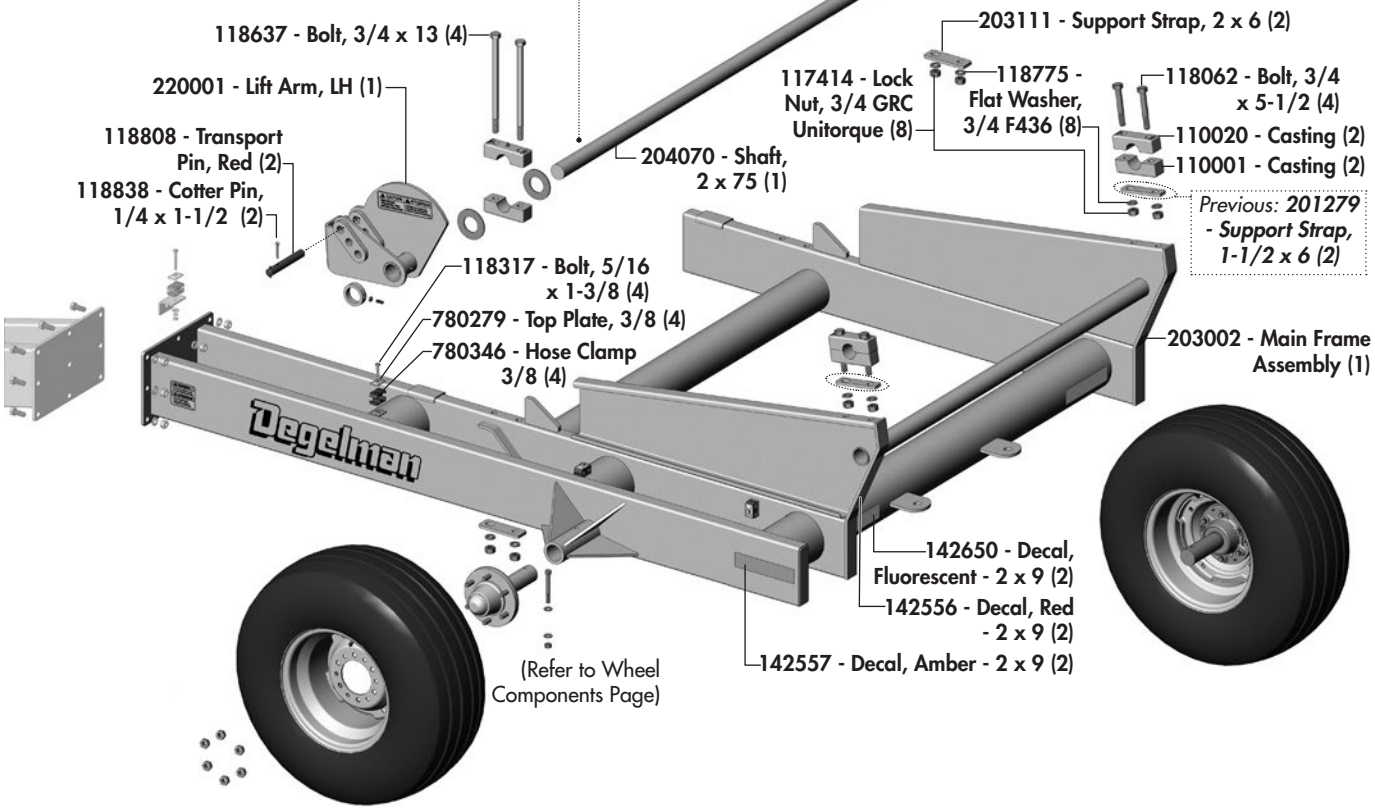

WHEEL COMPONENTS



Previous: 8 Ply Tire Pressure
12.5L x15 -8 PLY:
32 PSI (220 kPa)

Tire Pressure
12.5L x15 -12 PLY:
90 PSI *(620 kPa)*

131324 - Assembly, Hub/ Spindle - 2 x 12 (2)

118643 - Bolt, 1/2 x 4 GR8 (2)

118587 - Flat Washer, 1/2 - F436 (4)

118729 - Lock Nut, 1/2 GRC - Unitorque (2)

131535 - Tire Assembly (2)
127018 - Tire, 12.5L x 15 - 12 PLY (1)
131536 - Rim, 15 x 10 - 6 Bolt (1)
127016 - Valve Stem - TR416 (1)

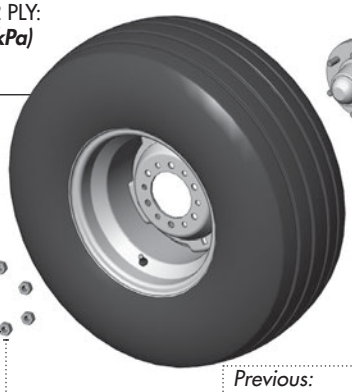

Previous Tire Assembly:
131329 - Tire Assembly (2)
127007 - Tire, 12.5L x 15 - 8 PLY (1)
131328 - Rim, 15 x 10 - 6 Bolt (1)
127006 - Valve Stem - TR415 (1)

117217 - Nut, Flange - 9/16 UNF (12)

Wheel Nut Torque:
120-130 lb.ft (165-175 N.m)



Previous:
118914 - Bolt, Wheel 9/16 x 1-3/4 UNF GR5 (12)

Previous:
131017 - Assembly, Hub/Spindle - 2 x 12 (2)

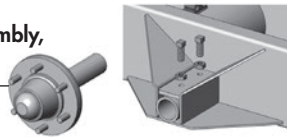

Mounted with:
118251 - Setscrew, Sq Head - 5/8 x 1-1/2 (4)
118416 - Jam Nut, 5/8 GR2 (4)

HUB/SPINDLE COMPONENTS

131324 - Hub/Spindle Assembly (2)

131700 - Hub, c/w Cups (1)
(Replacement Parts)
131708 - Stud, Wheel - CTD618 (1)
131416 - Stud, Wheel - ADR (1)

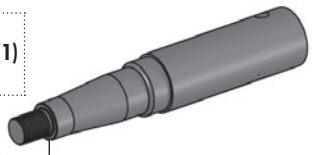

131322 - Spindle S618 - c/w Nut (1)

131701 - Hub Cap - CTD618 (1)
131414 - Hub Cap - ADR (1)

118835 - Cotter Pin 3/16 x 1-1/2 (1)

131026 - Dust Seal - CR#20140 (1)

131022 - Bearing Cone #25580 (1)

131023 - Bearing Cup #25520 (1)

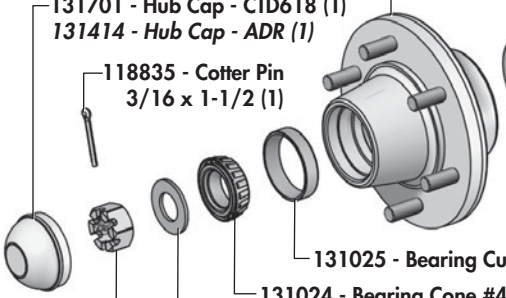

131025 - Bearing Cup #LM48510 (1)

131024 - Bearing Cone #48548 (1)

118423 - Slotted Nut, 1-14 UNS (1)

131020 - Flat Washer, 1 F436 (1)

Also Requires: 131709 - Wheel Nut, 9/16 - 18 UNF (6)
Torque, 9/16 Wheel Nut: 120-130 lb.ft (165-175 N.m)

Previous Hub/Spindle Components

131017 - Hub/Spindle Assembly - 2 x 12 (2)

131080 - Spindle, S618 2 X 12 (2)
comes with Slotted Nut

131700 - Hub CTD 618 - c/w Cups (1)
131708 - Replacement Stud (1)

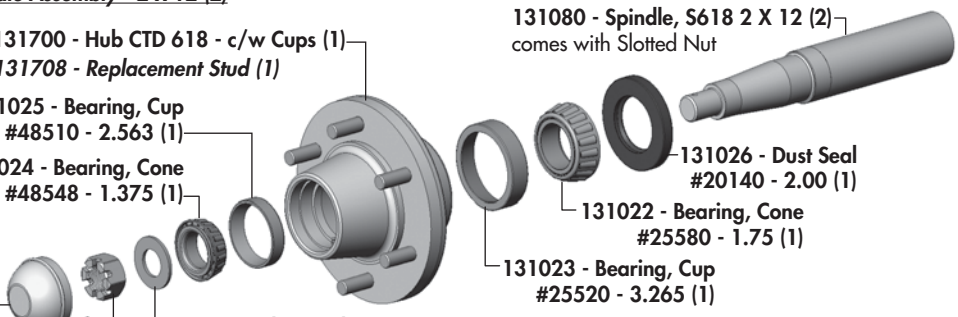

131025 - Bearing, Cup #48510 - 2.563 (1)

131024 - Bearing, Cone #48548 - 1.375 (1)

131026 - Dust Seal #20140 - 2.00 (1)

131022 - Bearing, Cone #25580 - 1.75 (1)

131023 - Bearing, Cup #25520 - 3.265 (1)

131701 - Hub, Cap - CTD 618 (1)

131020 - Flat Washer, 1" SAE (1)

118423 - Slotted Nut, 1" UNS (1)

118835 - Cotter Pin, 3/16 x 1-1/2 (1)

Also Requires: 131709 - Wheel Nut, 9/16 - 18 UNF (6)
Torque, 9/16 Wheel Nut: 120-130 lb.ft (165-175 N.m)

Hydraulic Components & Cylinders

Required Hoses

- (36) 126522 - Hose, 3/8 x 36 (1)
- (42) 126547 - Hose, 3/8 x 42 (1)
- (96) 126551 - Hose, 3/8 x 96 (1)
- (106) 126516 - Hose, 3/8 x 106 (1)
- (234) 126649 - Hose, 3/8 x 234 (2)

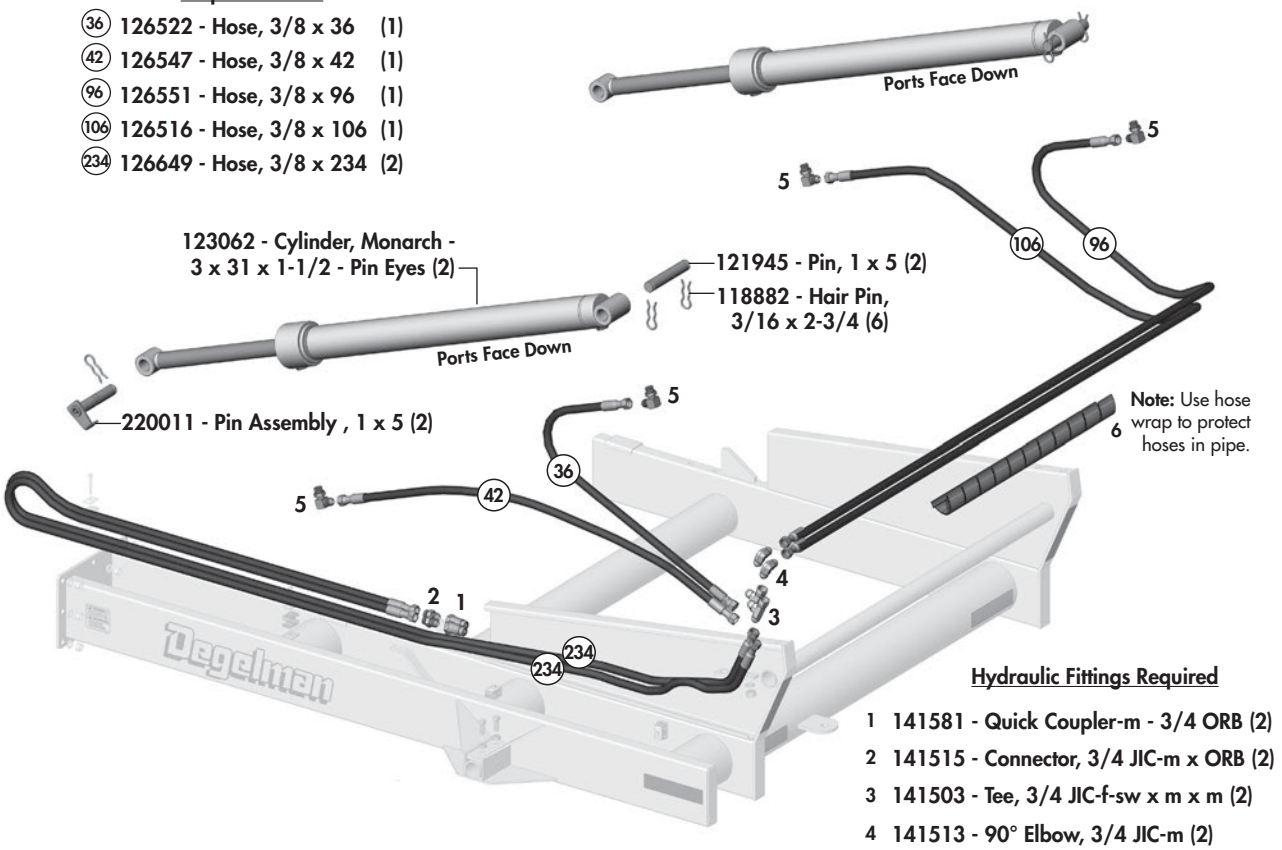

Hydraulic Fittings Required

1. 141581 - Quick Coupler-m - 3/4 ORB (2)
2. 141515 - Connector, 3/4 JIC-m x ORB (2)
3. 141503 - Tee, 3/4 JIC-f-sw x m x m (2)
4. 141513 - 90° Elbow, 3/4 JIC-m (2)
5. 141504 - 90° Elbow, 3/4 JIC-m x ORB (4)
6. 241023 - Wrap, Hose Protection (1)

LIFT/DUMP CYLINDER

123062 - Cylinder, Monarch - 3 x 31 x 1-1/2 - Pin Eyes

NOTE: Previous 2-1/2 x 31 x 1-1/2 Version Uses: 123073 - Seal Kit

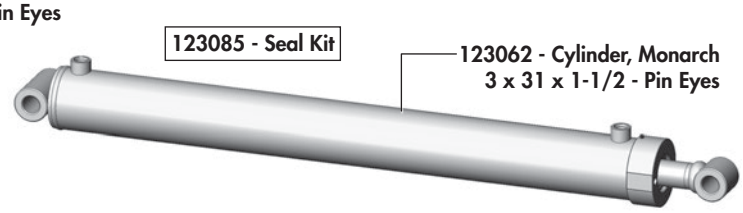

Previous Cylinder

122738 - Cylinder, 2-1/2 x 31 x 1-1/2 - Pin Eyes

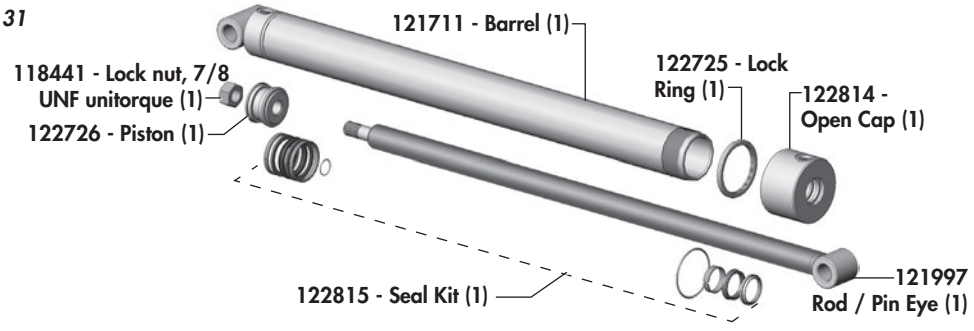

2 Year

Limited Warranty - Agricultural Products

Degelman Industries LP ("Degelman") warrants to the original purchaser of any new Degelman equipment, purchased from an authorized Degelman dealer, that the equipment will be free from defects in material and workmanship for a period of two (2) years from the date of delivery, for non-commercial use (including farm, institutional, government, and municipality) and (1) year from the date of delivery for commercial use. The obligation of Degelman to the purchaser under this warranty is limited to the repair or replacement of defective parts in the first year and to the provision, but not the installation of replacement parts in the second year. Degelman reserves the right to inspect any equipment or parts which are claimed to have been defective in material or workmanship.

This warranty limits its replacement or repair coverage to what is consistent with the warranty of Degelman's suppliers of purchased components.

Replacement or repair parts installed in the equipment covered by this limited warranty are warranted for ninety (90) days from the date of delivery of such part or the expiration of the applicable new equipment warranty period, which ever occurs later. Warranted parts shall be provided at no cost to the user at an authorized Degelman dealer during regular working hours. Warranted replacement parts will either be replaced or rebuilt at Degelman's discretion.

Disclaimer of implied warranties & consequential damages

This warranty shall not be interpreted to render Degelman Industries LP liable for injury, death, property damage or damages of any kind, whether direct, consequential, or contingent to property. Without limiting the generality of the foregoing, Degelman shall not be liable for damages resulting from any cause beyond its reasonable control, including, without limitation, loss of crops, any expense or loss of labour, supplies, rental machinery or loss of use.

No other warranty of any kind whatsoever, express or implied is made with respect to this sale; and all implied warranties of merchantability and fitness for a particular purpose which exceed the obligations set forth in this written warranty are hereby disclaimed and excluded from this sale. This exclusion shall not apply in any jurisdiction where it is not permitted by law.

This limited warranty shall not apply:

1. If, in the sole opinion of Degelman, the unit has been subjected to misapplication, abuse, misuse, negligence accident or incorrect off-site machine set-up.
2. To any goods that have sustained damage or deterioration attributable to a lack of routine maintenance (eg. Check and Re-torque of fastening hardware, Hydraulic fluid purities, drive train alignments, and clutch operation)
3. If parts not made or supplied by Degelman have been used in the connection with the unit, if, in the sole judgement of Degelman such use affects its performance, safety, stability or reliability.
4. If the unit has been altered or repaired outside of an authorized Degelman dealership in a manner which, in the sole judgement of Degelman, affects its performance, safety, stability or reliability.
5. To expendable or wear items such as (eg. Harrow tines, Rock Picker and Rock Rake wear teeth and replaceable bushings and pins.) and any other items that in the company's sole judgement are a wear item.

No employee or representative of Degelman Industries LP is authorized to change this limited warranty in any way or grant any other warranty unless such change is made in writing and signed by the Degelman Service Manager.

This limited warranty is subject to any future availability of supply, which may directly affect Degelman's ability to obtain materials or manufacture replacement parts.

Degelman reserves the right to make improvements in design or changes in specifications at any time, without incurring obligations to owners of equipment previously delivered.

This limited warranty is subject to compliance by the customer to the enclosed *Retail Customer's Responsibility Under Degelman Warranty.*

Warranty

Retail Customer's Responsibility Under Degelman Warranty.

It is the retail customer and/or Operator's responsibility to read the Operator's Manual, to operate, lubricate, maintain and store the equipment in accordance with all instructions and safety procedures. Failure of the operator to read the operators manual is a misuse of this equipment.

It is the retail customer and/or operators responsibility to inspect the product and to have any part(s) repaired or replaced when continued operation would cause damage or excessive wear to other parts or cause safety hazard.

It is the retail customer's responsibility to deliver the product to the authorized Degelman dealer, from whom he purchased it, for service or replacement of defective parts, which are covered by warranty. Repairs to be submitted for warranty consideration must be made within forty-five days of failure.

It is the Retail Customer's responsibility for any cost incurred by the dealer for hauling of the product for the purpose of performing a warranty obligation or inspection.

WARRANTY INFORMATION

Make certain the warranty registration card has been forwarded to:

Degelman Industries LP
Box 830 -272 Industrial Dr.
Regina, SK, Canada
S4P 3B1

Always give your dealer the serial number of your Degelman product when ordering parts or requesting service or other information.

The serial number is located on the serial number plate (*similar to the one shown in the image below*).
In the space provide, please record the model number, the serial number and the date of purchase to assist your dealer in providing you with prompt and efficient service.

SERIAL NUMBER: _____

MODEL NUMBER: _____

DATE OF PURCHASE: _____



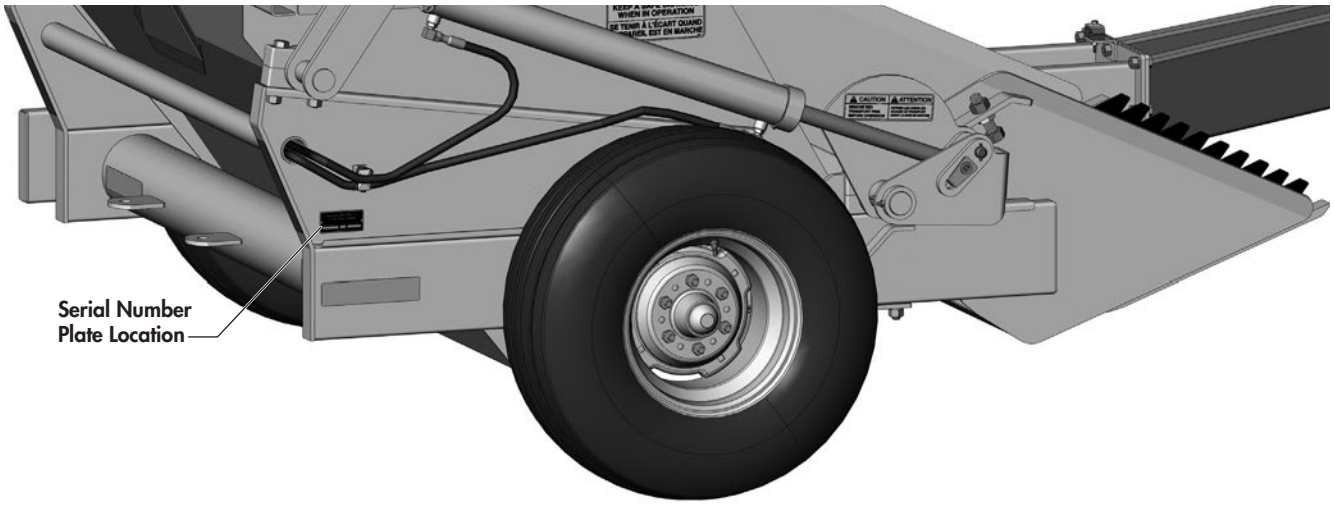

© 2026 Degelman Industries LP