Degelman INDUSTRIES LTD.

rock rake

RR1500

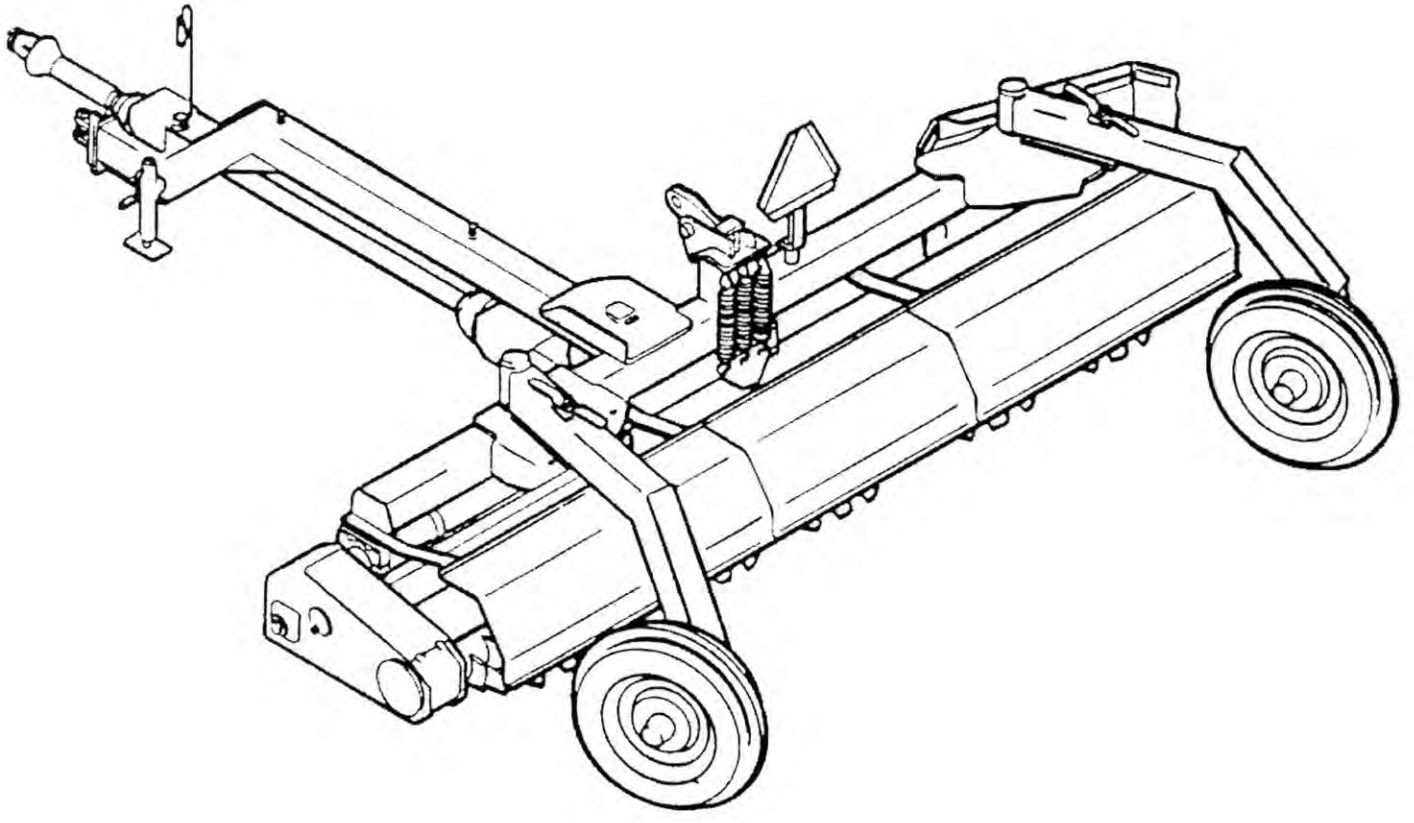

OPERATOR'S MANUAL

142350

Degelman INDUSTRIES LTD.

rock rake
RR1500

Introduction	1
Safety	2
Safety Decal Locations	8
Operation	11
Service and Maintenance	32
Trouble Shooting	55
Specifications	56
Index	60
Warranty	61

Record Serial Number:

.....

272 Industrial Drive, Box 830
Regina, Sask. Canada S4P 3B1
306 543-4447 543-2140 fx

degelman@degelman.com

www.degelman.com



SAFETY

The safety instructions that follow pertain only to this specific equipment. You should be aware of agricultural & industrial safety especially related to heavy equipment. If you are not familiar with safety procedures then you should get training.
Improper use will result in maiming or death.

142350

1 INTRODUCTION

Congratulations on your choice of a Degelman Rock Rake 1500 to complement your farming operation. It has been designed and manufactured to meet the needs of a discerning Agricultural market for the efficient windrowing of rocks.

Use this manual as your first source of information about the machine. If you follow the instructions given in this manual, your Rock Rake will work well for many years.

Safe, efficient and trouble free operation of your Degelman Rock Rake requires that you and anyone else who will be operating or maintaining the Rake, read and understand the Safety, Operation, Maintenance and Trouble Shooting information contained within the Operator's Manual.

Keep this manual handy for frequent reference and to pass on to new operators or owners. Call your Degelman Dealer if you need assistance, information, or additional copies of the manuals.

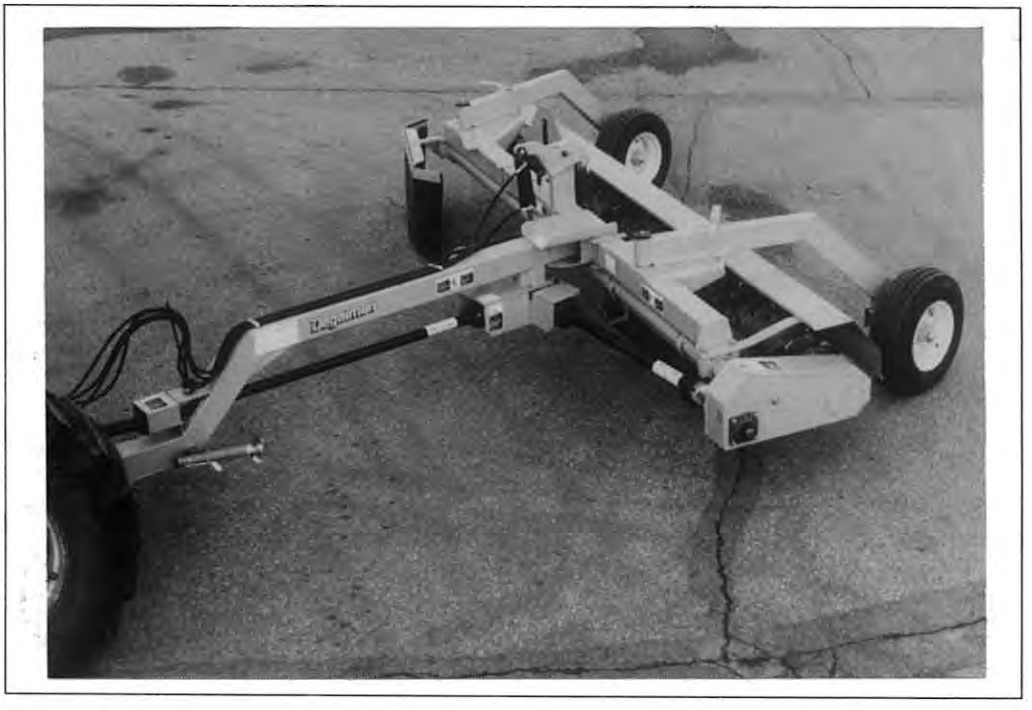

OPERATOR ORIENTATION - The directions left, right, front and rear, as mentioned throughout the manual, are as seen from the tractor drivers' seat and facing in the direction of travel.

SAFETY ALERT SYMBOL

This Safety Alert symbol means
ATTENTION! BECOME ALERT!
YOUR SAFETY IS INVOLVED!

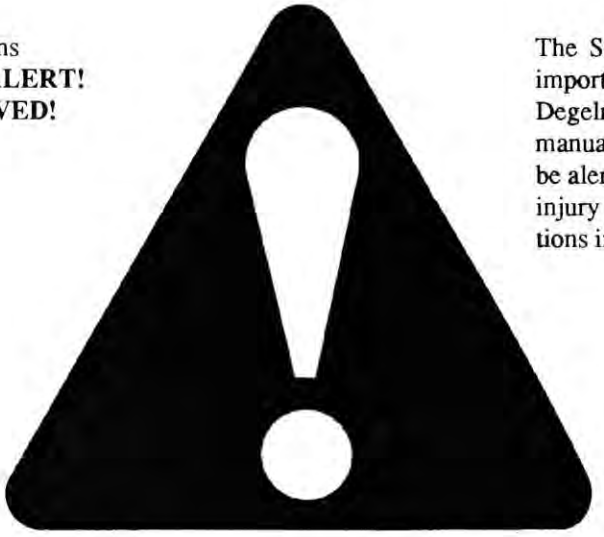

The Safety Alert symbol identifies important safety messages on the Degelman Rock Rake and in the manual. When you see this symbol, be alert to the possibility of personal injury or death. Follow the instructions in the safety message.

Why is SAFETY important to you?

3 Big Reasons!

- **Accidents Disable and Kill**
- **Accidents Cost**
- **Accidents Can Be Avoided**

SIGNAL WORDS:

Note the use of the signal words **DANGER, WARNING** and **CAUTION** with the safety messages. The appropriate signal word for each message has been selected using the following guide-lines:

DANGER - An immediate and specific hazard which WILL result in severe personal injury or death if the proper precautions are not taken.

WARNING - A specific hazard or unsafe practice which COULD result in severe personal injury or death if proper precautions are not taken.

CAUTION - Unsafe practices which could result in personal injury if proper practices are not taken, or as a reminder of good safety practices.

SAFETY

YOU are responsible for the SAFE operation and maintenance of your Degelman Rock Rake. **YOU** must ensure that you and anyone else who is going to operate, maintain or work around the Rock Rake be familiar with the operating and maintenance procedures and related SAFETY information contained in this manual. This manual will take you step-by-step through your working day and alerts you to all good safety practices that should be adhered to while operating this equipment.

Remember, **YOU** are the key to safety. Good safety practices not only protect you but also the people around you. Make these practices a working part of your safety program. Be certain that **EVERYONE** operating this equipment is familiar with the recommended operating and maintenance procedures and follows all the safety precautions. Most accidents can be prevented. Do not risk injury or death by ignoring good safety practices.

- Rock Rake owners must give operating instructions to operators or employees before allowing them to operate the Rock Rake, and at least annually thereafter per OSHA regulation 1928.57.
- The most important safety device on this equipment is a SAFE operator. It is the operator's responsibility to read and understand ALL Safety and Operating instructions in the manual and to follow these. All accidents can be avoided.
- A person who has not read and understood all operating and safety instructions is not qualified to operate the machine. An untrained operator exposes himself and bystanders to possible serious injury or death.
- Do not modify the equipment in any way. Unauthorized modification may impair the function and/or safety and could affect the life of the equipment.
- Think SAFETY! Work SAFELY!

2.1 GENERAL SAFETY

1. Read and understand the Operator's Manual and all safety signs before operating, maintaining or adjusting the Rake.



2. Install and properly secure all shields and guards before operating.
3. Have a first-aid kit available for use should the need arise and know how to use it.



4. Have a fire extinguisher available for use should the need arise and know how to use it.



5. Wear appropriate protective gear. This list includes but is not limited to:
   - A hard hat
   - Protective shoes with slip resistant soles
   - Protective glasses or goggles
   - Heavy gloves
   - Wet weather gear
   - Hearing protection
   - Respirator or filter mask



6. Clear the area of people, especially small children, and remove foreign objects from the machine before starting and operating.
7. Do not allow riders.
8. Lower rake, stop tractor engine, place all controls in neutral, set park brake, remove ignition key and wait for all moving parts to stop before servicing, adjusting, repairing or unplugging.
9. Review safety related items with all operators annually.

2.2 OPERATING SAFETY

1. Read and understand the Operator's Manual and all safety signs before using.

2. Lower rake, stop tractor engine, place all controls in neutral, set park brake, remove ignition key and wait for all moving parts to stop before servicing, adjusting, repairing or unplugging.

3. Keep hands, feet, hair and clothing away from all moving and/or rotating parts.

4. Do not allow riders on the Rake or tractor during operation or transporting.

5. Keep all shields and guards in place when operating.

6. Clear the area of all bystanders, especially children, before starting.

7. Do not operate machine on steep side hills or slopes.

8. Be careful when working around or maintaining a high-pressure hydraulic system. Ensure all components are tight and in good repair before starting.

9. Clean all reflectors, lights and the SMV sign before transporting on a highway or public road. Be sure to check with local highway authorities and comply with their lighting requirements.

10. Stay well back from machine when operating to prevent being hit by flying rocks. Keep others away.

2.3 MAINTENANCE SAFETY

1. Review the Operator's Manual and all safety items before working with, maintaining or operating the Rake.

2. Lower rake, stop the tractor engine, place all controls in neutral, set park brake, remove ignition key and wait for all moving parts to stop before servicing, adjusting, repairing or unplugging.

3. Keep hands, feet, clothing and hair away from all moving and/or rotating parts.

4. Clear the area of bystanders, especially children, when carrying out any maintenance and repairs or making any adjustments.

5. Place safety stands or large blocks under the frame before removing tires or working beneath the machine.

6. Be careful when working around or maintaining a high-pressure hydraulic system. Wear proper eye and hand protection when searching for a high-pressure hydraulic leak. Use a piece of wood or cardboard as a backstop when searching for a pin hole leak in a hose or a fitting.

7. Always relieve pressure before disconnecting or working on hydraulic system.

2.4 HYDRAULIC SAFETY

1. Always place all tractor hydraulic controls in neutral before dismounting.

2. Make sure that all components in the hydraulic system are kept in good condition and are clean.

3. Replace any worn, cut, abraded, flattened or crimped hoses and metal lines.

4. Do not attempt any makeshift repairs to the hydraulic lines, fittings or hoses by using tape, clamps or cements. The hydraulic system operates under extremely high-pressure. Such repairs will fail suddenly and create a hazardous and unsafe condition.

5. Wear proper hand and eye protection when searching for a high-pressure hydraulic leak. Use a piece of wood or cardboard as a backstop instead of hands to isolate and identify a leak.





6. If injured by a concentrated high-pressure stream of hydraulic fluid, seek medical attention immediately. Serious infection or toxic reaction can develop from hydraulic fluid piercing the skin surface.

7. Before applying pressure to the system, make sure all components are tight and that lines, hoses and couplings are not damaged.

- Think SAFETY! Work SAFELY!

2.5 TRANSPORT SAFETY

1. Read and understand ALL the information in the Operator's Manual regarding procedures and SAFETY when operating the Rake in the field/yard or on the road.

2. Check with local authorities regarding machine transport on public roads. Obey all applicable laws and regulations.

3. Always travel at a safe speed. Use caution when making corners or meeting traffic.

4. Make sure the SMV (Slow Moving Vehicle) emblem and all the lights and reflectors that are required by the local highway and transport authorities are in place, are clean and can be seen clearly by all overtaking and oncoming traffic.

5. Keep to the right and yield the right-of-way to allow faster traffic to pass. Drive on the road shoulder, if permitted by law.

6. Always use hazard warning flashers on tractor when transporting unless prohibited by law.

7. Always use a pin with provisions for a mechanical retainer and a safety chain when attaching to a tractor or towing vehicle.

2.6 STORAGE SAFETY

1. Store unit in an area away from human activity.
2. Store machine with rake drum lowered.
3. Do not permit children to play around the stored unit.

2.7 TIRE SAFETY

1. Failure to follow proper procedures when mounting a tire on a wheel or rim can produce a blow out which may result in serious injury or death.
2. Do not attempt to mount a tire unless you have the proper equipment and experience to do the job.
3. Have a qualified tire dealer or repair serviceman perform required tire maintenance.

2.8 SAFETY DECALS

1. Keep safety decals and signs clean and legible at all times.
2. Replace safety decals and signs that are missing or have become illegible.
3. Replaced parts that displayed a safety sign should also display the current sign.
4. Safety decals or signs are available from your Dealer Parts Department. Safety decals will be available free of charge upon request.

How to Install Safety Decals:

- Be sure that the installation area is clean and dry.
- Decide on the exact position before you remove the backing paper.
- Remove the smallest portion of the split backing paper.
- Align the decal over the specified area and carefully press the small portion with the exposed sticky backing in place.
- Slowly peel back the remaining paper and carefully smooth the remaining portion of the decal in place.
- Small air pockets can be pierced with a pin and smoothed out using the piece of decal backing paper.

2.9 SIGN-OFF FORM

Degelman follows the general Safety Standards specified by the American Society of Agricultural Engineers (ASAE) and the Occupational Safety and Health Administration (OSHA). Anyone who will be operating and/or maintaining the Degelman Rock Rake must read and clearly understand ALL Safety, Operating and Maintenance information presented in this manual.

Do not operate or allow anyone else to operate this equipment until such information has been reviewed. Annually review this information before the season start-up.

Make these periodic reviews of SAFETY and OPERATION a standard practice for all of your equipment. We feel that an untrained operator is unqualified to operate this machine.

A sign-off sheet is provided for your record keeping to show that all personnel who will be working with the equipment have read and understand the information in the Operator's Manual and have been instructed in the safe operation of the equipment.

SIGN-OFF FORM

DATE	EMPLOYEES SIGNATURE	EMPLOYERS SIGNATURE

3 SAFETY DECAL LOCATIONS

The types of decals and locations on the equipment are shown in the illustration below. Good safety requires that you familiarize yourself with the various Safety Decals, the type of warning and the area, or particular function related to that area, that requires your SAFETY AWARENESS.

- **Think SAFETY! Work SAFELY!**

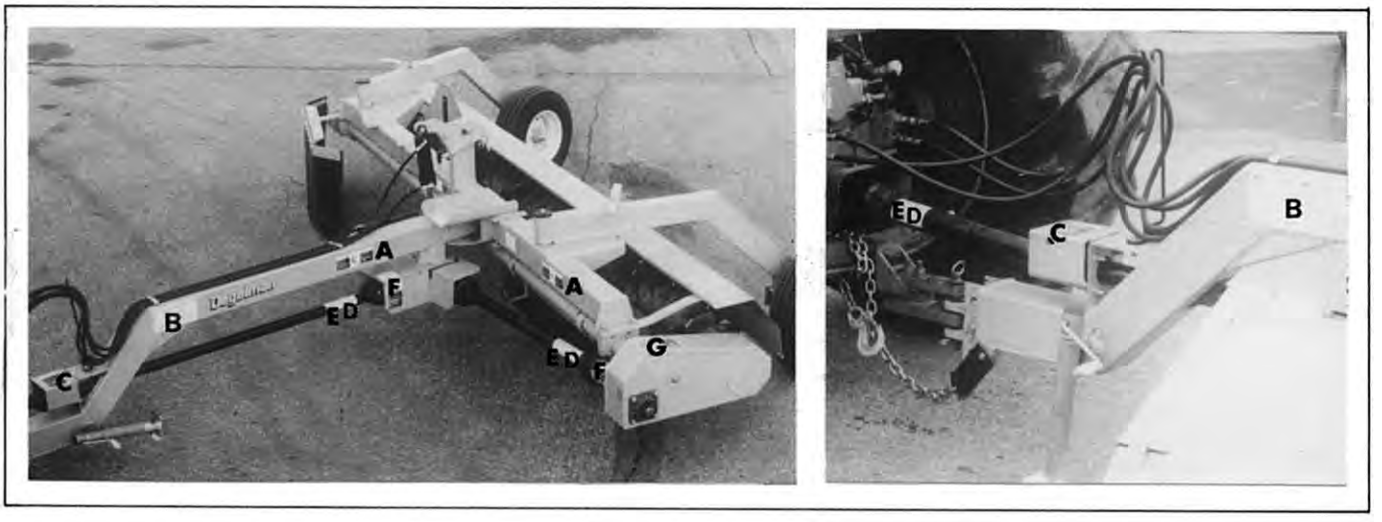

A

ADVERTISSEMENT

RISQUE D'ACCIDENT

Peut causer des blessures graves et méme mortelles.

- Se tenir éloigné de la pôle d'attache et du bâti en installant la machine en position de transport.
- Tenir toute personne éloignée de la machine.



WARNING

PINCH POINT HAZARD

Can cause serious injury or death.

- Keep away from hitch pole and frame when swinging into transport.
- Keep others away.

142362

B

DANGER

1. Lire et comprendre le manuel de l'utilisateur avant la mise en marche.
2. Installer et s'assurer que les écrans protecteurs et les gardes sont bien en place avant la mise en marche.
3. S'assurer qu'il n'y a personne autour de la machine, surtout des enfants, avant la mise en marche.
4. Tenir les mains, les pieds et les vêtements à l'écart des pièces en mouvement.
5. Abaisser la machine au sol, fermer le moteur du tracteur, bloquer les freins, enlever la clé de contact et attendre que toutes les pièces en mouvement s'arrêtent avant de régler, ajuster, lubrifier, débloquer ou réparer la machine.
6. Utiliser une longue pôle ou barre rigide (crowbar) pour déloger les roches ou objets coincés entre la grille et les palettes. Ne pas se servir de ses mains.
7. Revoir au début de chaque saison les conseils de sécurité.

DANGER

1. Read and understand Operator's Manual before operating.
2. Install and secure all shields and guards before starting.
3. Clear the area of bystanders, especially small children, before starting.
4. Keep hands, feet, hair and clothing away from moving parts.
5. Lower machine to the ground, stop tractor engine, set park brake, remove ignition key and wait for all moving parts to stop before servicing, maintaining, adjusting, repairing or unplugging.
6. Stay away from machine when operating to prevent being hit by flying rocks. Keep others away.
7. Review safety instructions annually.

142355

REMEMBER - If Safety Decals have been damaged, removed, become illegible or parts replaced without decals, new decals must be applied. New decals are available from your authorized dealer free of charge.

The types of decals and locations on the equipment are shown in the illustration below. Good safety requires that you familiarize yourself with the various Safety Decals, the type of warning and the area, or particular function related to that area, that requires your SAFETY AWARENESS.

- **Think SAFETY! Work SAFELY!**

C



D



E



F



G



REMEMBER - If Safety Decals have been damaged, removed, become illegible or parts replaced without decals, new decals must be applied. New decals are available from your authorized dealer free of charge.

The types of decals and locations on the equipment are shown in the illustration below. Good safety requires that you familiarize yourself with the various Safety Decals, the type of warning and the area, or particular function related to that area, that requires your SAFETY AWARENESS.

- **Think SAFETY! Work SAFELY!**



H

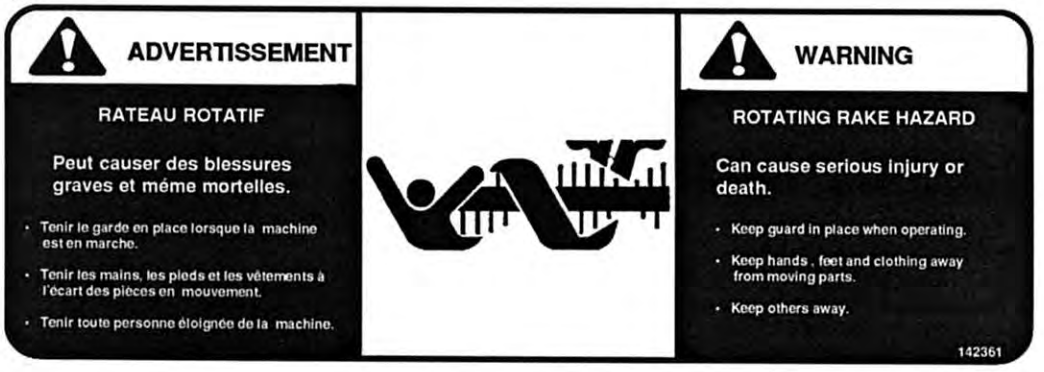

REMEMBER - If Safety Decals have been damaged, removed, become illegible or parts replaced without decals, new decals must be applied. New decals are available from your authorized dealer free of charge.

4 OPERATION

⚠ OPERATING SAFETY

1. Read and understand the Operator's Manual before starting.
2. Lower rake, stop engine, place all controls in neutral, set park brake, remove ignition key and wait for all moving parts to stop before servicing, adjusting, repairing or unplugging.
3. Keep hands, feet, hair and clothing away from all moving and/or rotating parts.
4. Do not allow riders.
5. Clear the area of bystanders, especially small children before starting.
6. Keep all guards and shields in place.
7. Stay well back from machine when operating to prevent being hit by flying rocks. Keep others away.
8. Turn to the left when maneuvering to keep the tractor away from the plane of flying rocks.

4.1 TO THE NEW OPERATOR OR OWNER

The Degelman Model RR1500 Rock Rakes are designed to efficiently windrow rocks from 2 to 12 inches (50 to 300 mm) diameter. Many of the features incorporated into this machine are the result of suggestions made by customers like you.

It is the owner or operator's responsibility to read this manual carefully to learn how to operate the machine safely and how to set it to provide maximum efficiency. Safety is everyones business. By following safe operating practices, a safe environment is provided for the operator and bystanders.

The manual will take you step-by-step through your working day. By following the operating instructions in conjunction with a good maintenance program, your Rock Rake will provide many years of trouble-free service.

4.2 PRINCIPLES OF OPERATION

The machine has a rotating drum that has a spiraling set of teeth bolted to it. As the drum rotates and the machine moves along the field, the teeth move the rocks along the front of the drum to form a windrow of rocks on the right side.

The drum is turned by the PTO from the towing vehicle.

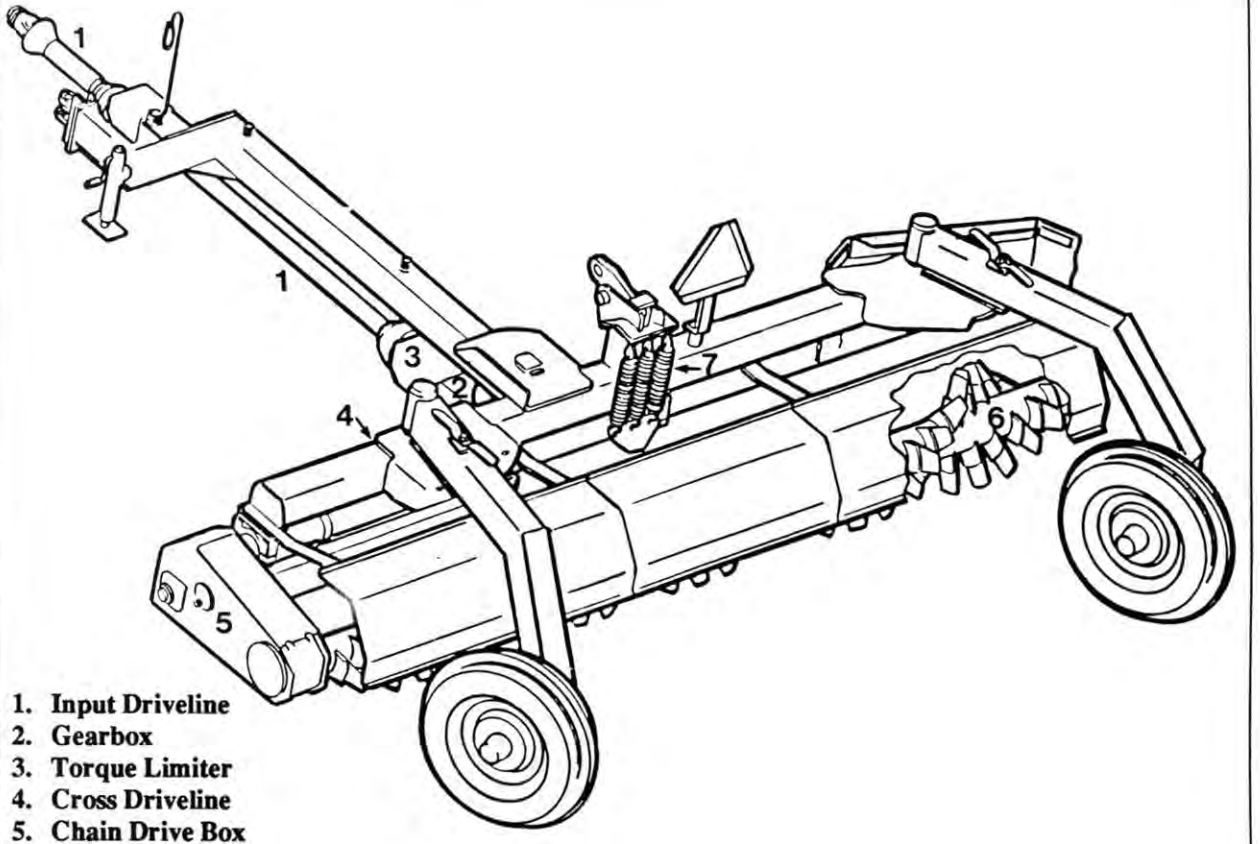

1. **Input Driveline**
2. **Gearbox**
3. **Torque Limiter**
4. **Cross Driveline**
5. **Chain Drive Box**
6. **Rake Drum**
7. **Suspension System**

Fig. 1 PRINCIPLES OF OPERATION

4.3 BREAK-IN

Although there are no operational restrictions on the Rake when it is new, there are some mechanical checks that must be done to insure the long term integrity of the unit. When using the machine for the first time, follow this procedure:

A. Before using:

1. Read Operator's Manual
2. Lubricate all grease points.
3. Check all nuts, bolts, capscrews and other hardware.
4. Add oil to the gearbox.
5. Add oil to chaincase.

B. After operating for 2 hours:

1. Retorque wheel bolts to the specified values.
2. Check all hardware. Tighten as required.
3. Check all hydraulic system connections. Tighten if any are leaking.

C. After operating 10 hours:

1. Repeat the checks outlined in Step B.
2. Then go to the service schedule as outlined in the Maintenance Section.

D. After operating for 100 hours:

1. Drain the oil from the gearbox.
2. Replace with SAE 85W90 gear oil.
3. Replace oil again at 2500 hours.

4.4 PRE-OPERATION CHECKLIST

Efficient and safe operation of the Rock Rake requires that each operator reads and understands the operating procedures and all related safety procedures outlined in this manual. A pre-operational checklist is provided for the operator. It is important for both personal safety and maintaining the good mechanical condition of the Rake that this checklist be followed.

Before operating the machine and each time thereafter, the following areas should be checked off:

1. Lubricate the machine per the schedule outlined in the "Maintenance Section".
2. Use only a tractor of adequate power and weight to handle the Rake.
3. Ensure that the machine is properly attached to the tractor using a drawbar pin with provisions for a mechanical retainer. Make sure that a retainer such as a Klik pin is installed.

NOTE

It is important to pin the draw bar in the central location only.

4. Ensure that a safety chain on the hitch is installed.
5. Check the roller chain and sprockets for proper alignment and tension. Adjust for tension as required.
6. Check the oil level in the tractor hydraulic reservoir. Top up as required.
7. Inspect all hydraulic lines, hoses, fittings and couplers for tightness. Tighten if there are leaks. Use a clean cloth to wipe any accumulated dirt from the couplers before connecting to the tractor's hydraulic system.
8. Inspect all moving and rotating parts. Remove any debris that has become entangled in them.
9. Check the oil level in the gearbox. Top up as required.
10. Check the oil level in the chain drive reservoir. Top up as required.
11. Make sure that all guards and shields are installed and secured in position.
12. Insure that the PTO driveline is securely attached on both ends and can telescope easily.
13. Check that the PTO driveline shield rotates freely.
14. Check the tires and insure that they are inflated to the specified pressure: 32 psi (220 kPa).

4.5 EQUIPMENT PREPARATION

4.5.1 TRACTOR PREPARATION

Follow this procedure when selecting and preparing a tractor for use with the machine:

1. Use only with a tractor of sufficient power and weight to adequately handle the machine. It is recommended that the tractor have at least 50 PTO horsepower for normal operating conditions and 70 PTO horsepower when operating in hilly conditions.

2. The drawbar pin to PTO shaft end dimension should be:

   a. 16 inches (406 mm) for 1000 RPM speed.

   b. 14 inches (356 mm) for 540 RPM speed.

IMPORTANT

Do not use on a tractor equipped with a PTO shaft adapter to prevent mismatching of PTO speeds and overtelescoping of the driveline.

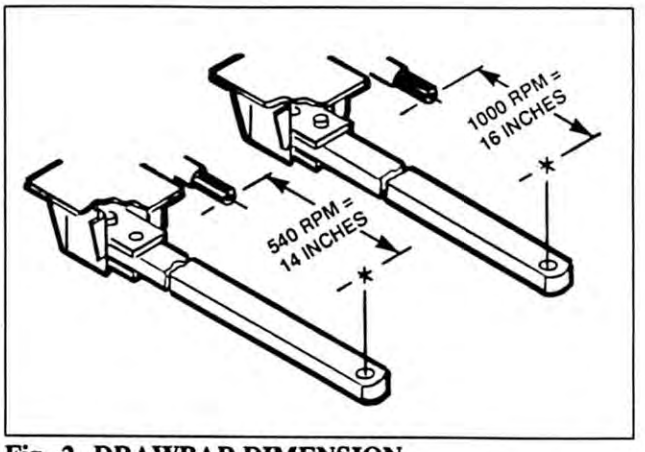

Fig. 2 DRAWBAR DIMENSION

3. Locate the drawbar in its center position to prevent it from swinging.

4. Use only a drawbar pin with provisions for a mechanical retainer such as a Klik pin. Always install the retainer.



Fig. 3 DRAWBAR PIN

5. Always attach a safety chain between the tractor and the machine to prevent unexpected separation.

6. It is not recommended to use a tractor that is equipped with duals. Tires drive over the rocks, push them into the ground and make them difficult to pick up with the Rake. In many cases, the spacing of the outer dual creates a tire track where the rock windrow is placed. This compacted tire track makes picking more difficult.



Fig. 4 SAFETY CHAIN

4.5.2 ROCK RAKE PREPARATION

Follow this attachment and preparation procedure at all times:

1. Clear the area of bystanders, especially small children, before starting.

2. Be sure there is enough room to back the tractor up to the machine.

3. Start the tractor and slowly back it up to the hitch point.

4. Stop the tractor, place all controls in neutral, set park brake and remove ignition key before dismounting.



Fig. 5 ROCK RAKE

5. Adjust the length of the drawbar to give the appropriate dimension between the PTO shaft and drawbar pin hole. Refer to the tractor Operator's Manual.

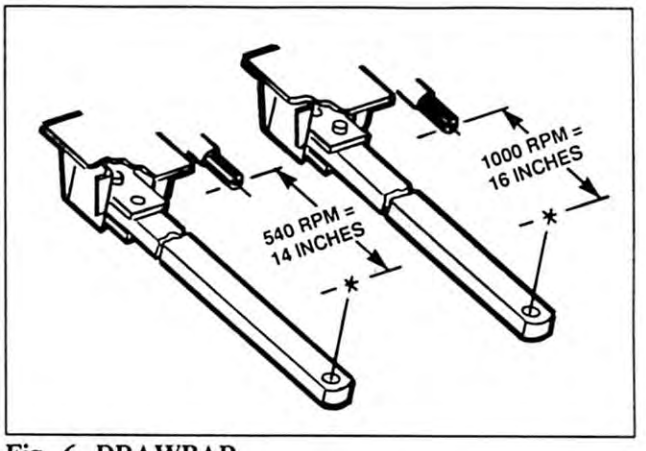

Fig. 6 DRAWBAR

6. Use the hitch pole jack to raise or lower the hitch to align with the drawbar.

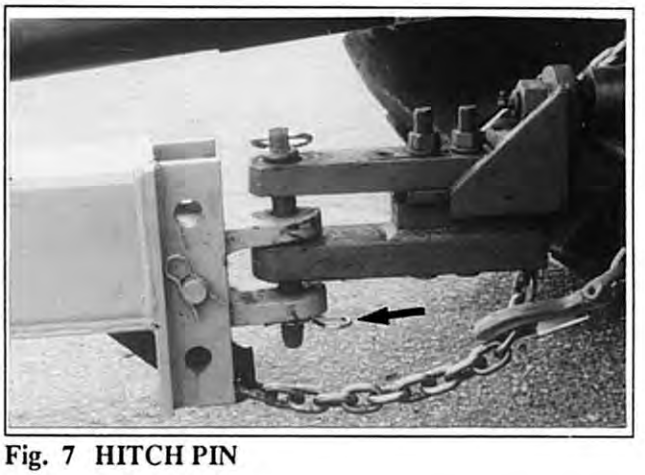

Fig. 7 HITCH PIN

7. Install a drawbar pin with provisions for a mechanical retainer such as a Klik pin. Install the retainer.

8. Use the pin through the hitch clevis to provide a level hitch pole or one that is parallel to the ground.

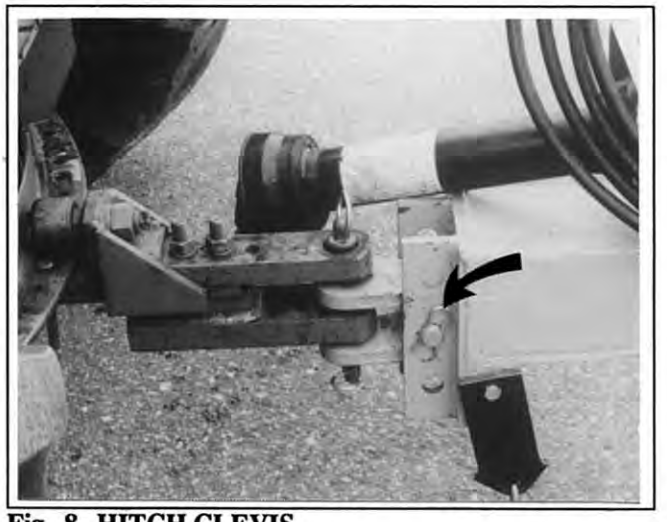

Fig. 8 HITCH CLEVIS

9. Install a safety chain between the tractor drawbar cage and the hitch pole.

10. Attaching PTO driveline:

    a. Check that the driveline telescopes easily and that the shield rotates freely.

    b. Attach the driveline to the tractor shaft by retracting the locking collar, slide the yoke over the shaft and pushing on the yoke until the locking pin clicks into position. Be sure the yoke is locked on the shaft.

11. Connect the hydraulics:

    a. Use a clean cloth or paper towel to clean the couplers on the ends of the hoses. Also clean the area around the couplers on the tractor.

    b. Remove the plastic plugs from the couplers and insert the male ends. Be sure to match the high and return pressure lines to one valve bank.

    c. Connect all the couplers. Be sure to match the system to the desired control lever in the tractor.

NOTE

If the direction of motion is wrong, reverse the couplers.



Use extreme care when working around a high-pressure hydraulic system. Make sure all connections are tight and all components are in good repair. Wear hand and eye protection when searching for suspected leaks.

12. Press the hoses into the flexible hose holder to secure them from dragging or becoming entangled in moving parts. Provide sufficient slack for turning.



Fig. 9 ATTACHED

13. Raise the hitch jack and rotate it 90° to place in its stowed position.

14. When unhooking from the tractor, reverse the above procedure.

15. Place the machine into the configuration appropriate for the planned use. Refer to Section 4.6 for configuration conversion procedures.

4.6 MACHINE POSITIONING

The machine has three distinct configurations: field, narrow transport and wide transport. This section gives the procedures to convert from one configuration to another. Review the appropriate section before starting to ensure that the conversion is done safely and efficiently.

4.6.1 FIELD POSITION TO WIDE TRANSPORT

When travelling distances are short and there are no closely spaced obstacles, the machine can be placed in a semi-transport configuration for moving. To convert from field position to a wide transport configuration, follow this procedure:

1. Attach a tractor to the unit by following the procedure outlined in Section 4.5.2.

2. Raise the spiral drum to its maximum up position.

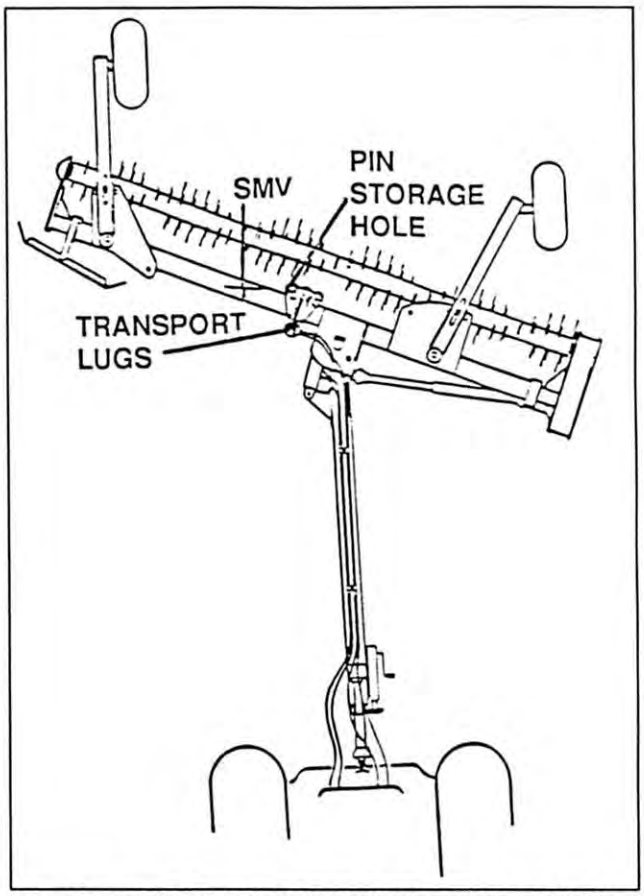

Fig. 10 FIELD POSITION TO WIDE TRANSPORT

3. Remove pin from storage hole and insert through the transport lugs to hold spiral drum in the raised position.



Fig. 11 LOCK PIN

4. Check to make sure the "Slow Moving Vehicle (SMV)" emblem is facing the rear in line with the wheels.

4.6.2 WIDE TRANSPORT TO FIELD POSITION

1. Attach a tractor to the unit by following the procedure outlined in Section 4.5.2.

2. Remove pin through transport lugs and place in its storage position.

3. Lower spiral drum into its working position.

4. Swing the frame back into the field position.

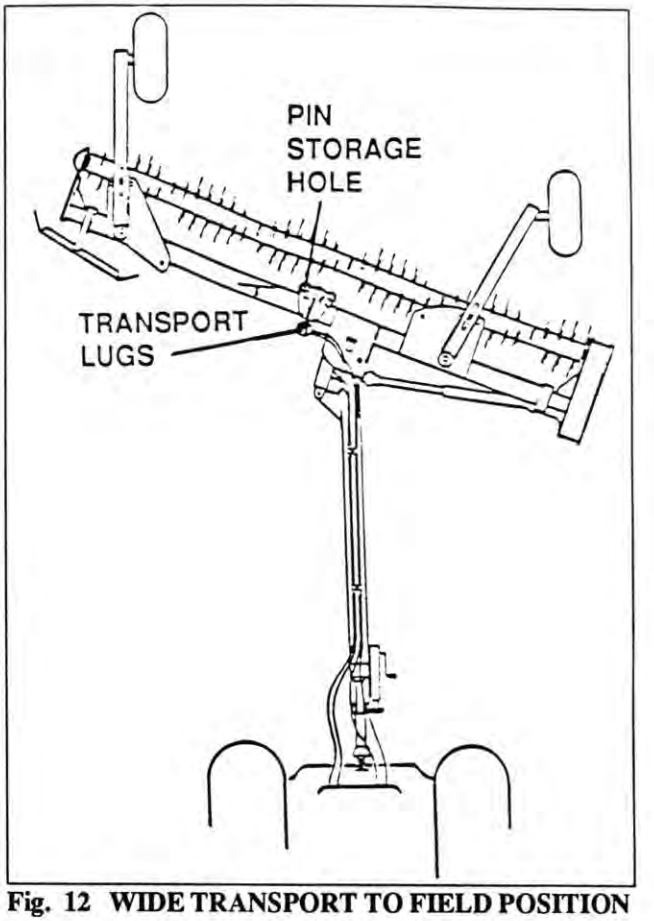

Fig. 12 WIDE TRANSPORT TO FIELD POSITION

4.6.3 FIELD POSITION TO NARROW TRANSPORT

When it is necessary to move the machine a long distance or through narrow gates or bridges, it can be folded up so it is narrower than the tractor. To fold into narrow transport, follow this procedure:

1. Attach a tractor to the unit by following the procedure outlined in Section 4.5.2.

2. Fold back and pin the hinged shield over the cross driveline yoke.

3. Disconnect the driveline from the output shaft of the gearbox.

4. Compress the driveline and lay it in the storage bracket. The neck of the bell should support the driveline in the bracket.



Fig. 13 CROSS DRIVELINE

5. Remove safety stop bolt.

6. Retract hitch cylinder to position spiral drum at right angles to hitch pole.



Fig. 14 SAFETY STOP NUT

7. Remove suspension lock pin from its storage hole and install through floating arm.

8. Lower spiral drum to the ground and raise the wheels off the ground.

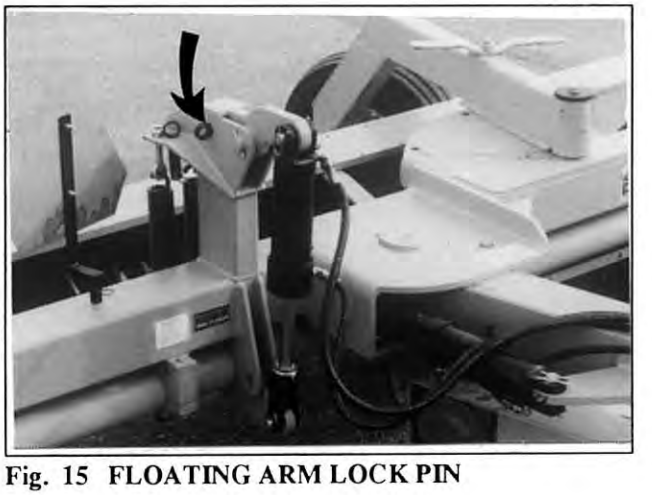

Fig. 15 FLOATING ARM LOCK PIN

9. Remove wing nut and bolt through each wheel leg.

10. Swing each wheel leg into its narrow transport position. Reinstall the bolts and tighen the wing nuts.

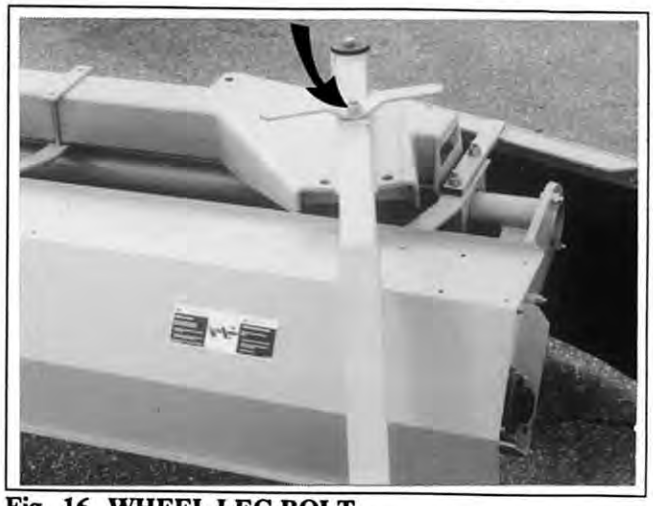

Fig. 16 WHEEL LEG BOLT

11. Raise spiral drum to its highest position.

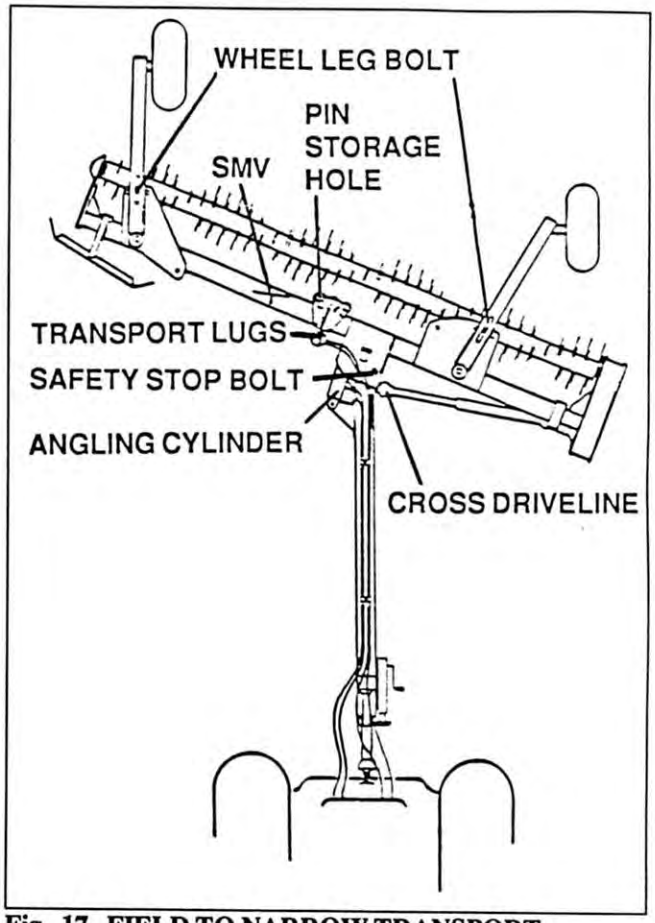

Fig. 17 FIELD TO NARROW TRANSPORT

12. Remove pin from storage hole and insert through transport lugs to hold spiral drum in raised position.

13. Extend hitch angling cylinder to move frame into the narrow transport configuration.

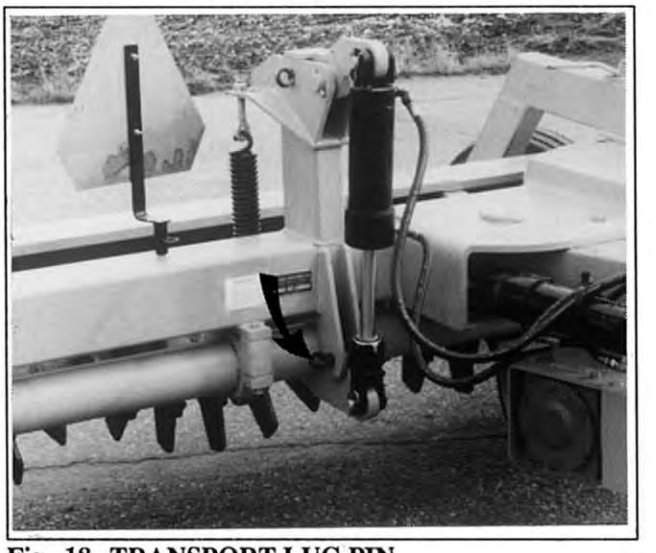

Fig. 18 TRANSPORT LUG PIN

WARNING



Stay away from the left side of hitch pole when swinging frame. The frame can move quickly and pinch someone in that area.

Keep others away.

14. Reinstall safety stop bolt.

15. Check to make sure the SMV (Slow Moving Vehicle) emblem is facing the rear.

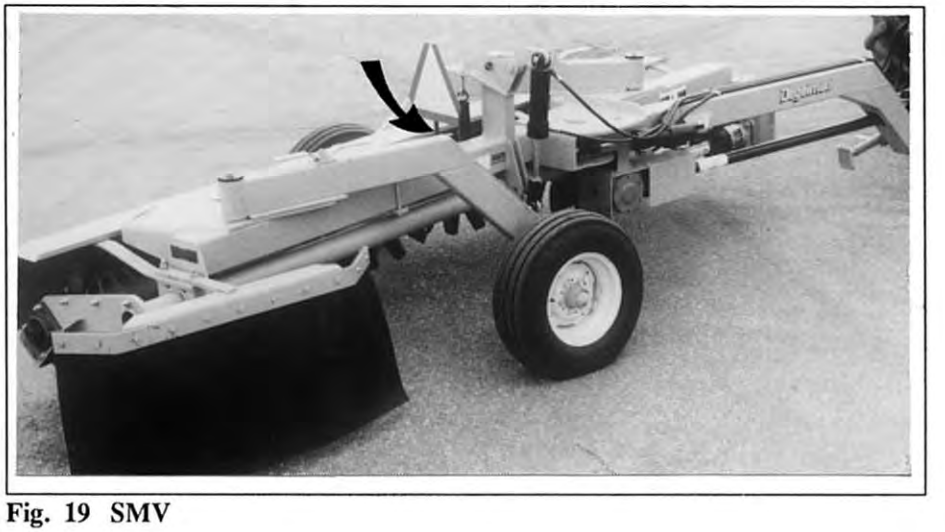

Fig. 19 SMV

4.6.4 NARROW TRANSPORT TO FIELD POSITION

When changing from narrow transport to field configuration, follow this procedure:

1. Attach the tractor to the machine by following the procedure outlined in Section 4.5.2.

2. Remove safety stop bolt.

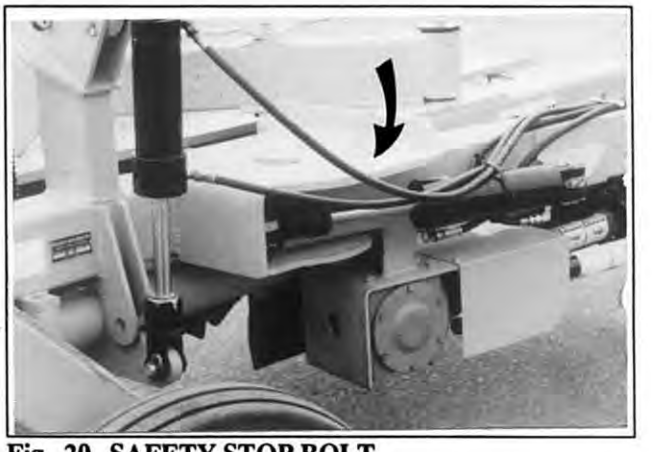

Fig. 20 SAFETY STOP BOLT

3. Retract hitch angling cylinder to position spiral drum square to the hitch pole.

WARNING

Stay away from the machine when adjusting the hitch pole angle.

Keep others away.

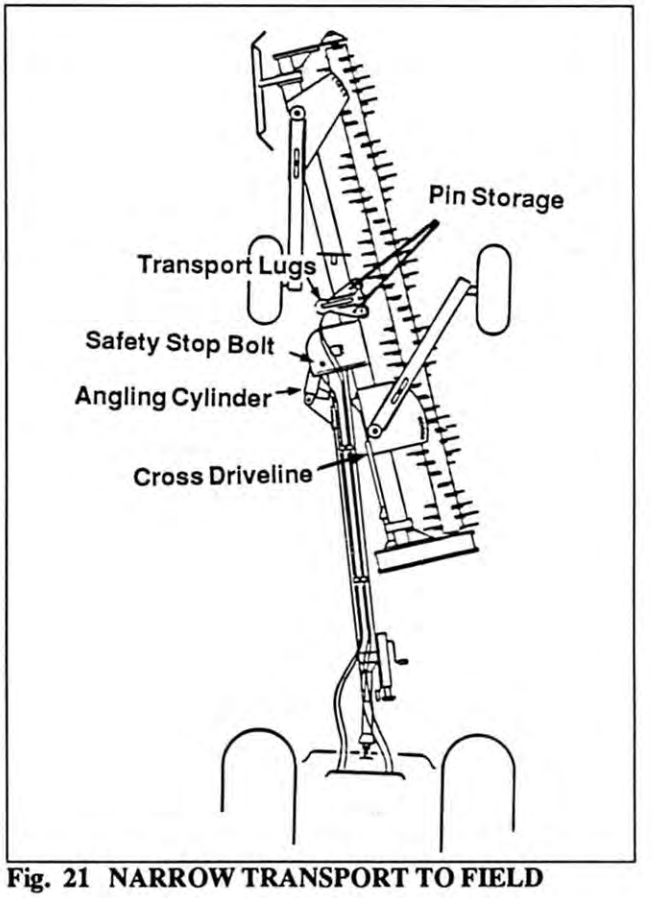

Fig. 21 NARROW TRANSPORT TO FIELD

4. Remove pin from transport lugs and place in storage hole.

5. Lower spiral drum to the ground and raise the wheels.



Fig. 22 TRANSPORT LUGS

6. Remove the wing nut and bolt through each wheel leg.

7. Swing each wheel leg into its field position. Reinstall wheel leg bolt and tighten wing nut.

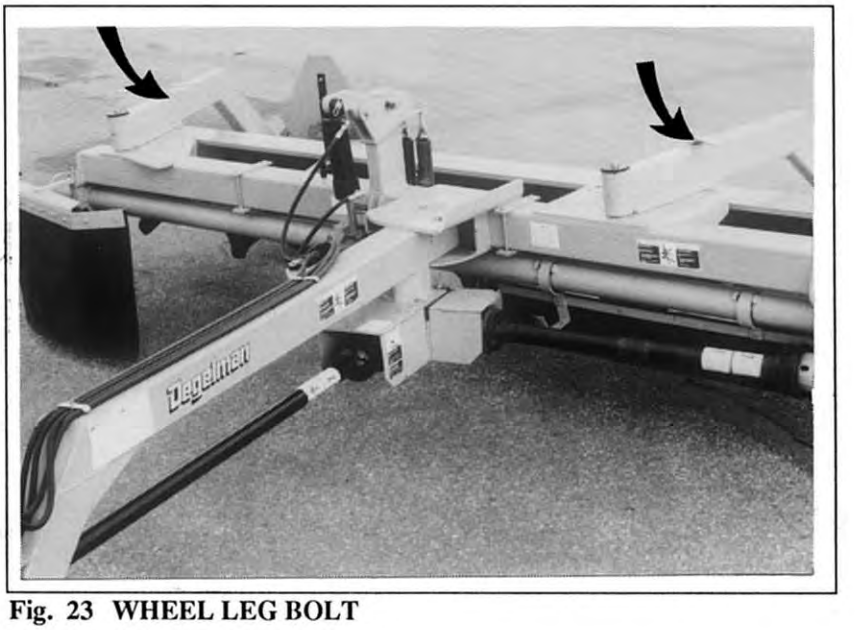

Fig. 23 WHEEL LEG BOLT

8. Raise spiral drum to lower wheels to the ground.

9. Remove pin through floating arm and place pin in storage hole.

10. Install safety stop bolt.

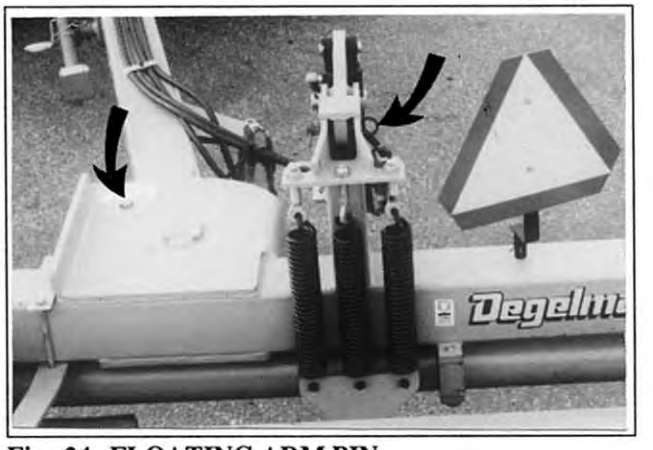

Fig. 24 FLOATING ARM PIN

11. Remove the cross driveline from the storage bracket and install on the gearbox output shaft.

12. Unfold and pin the hinged shield covering the cross driveline yoke.

WARNING

Stay away from the machine when adjusting the hitch pole angle.

Keep others away.



Fig. 25 CROSS DRIVELINE

13. Adjust the hitch pole to the appropriate angle for the work to be done.



Fig. 26 HINGED SHIELD

4.7 OPERATING

Familiarize yourself with the various settings of the Rock Rake that are designed to allow the machine to work in a variety of field conditions. Field experience will indicate the combination of machine and operating condition to give a quality job. This section will cover the interaction of the field conditions and machine settings.

1. **Operator's Responsibility**
   Every operator should read this manual and be instructed in safe operating procedure. An untrained operator is not qualified to operate this machine and could place themselves or bystanders in danger.

2. **Field Conditions**
   a. Rock Density
      Rate the rock density as light, medium or heavy. Normally the machine ground speed will decrease as the rock density increases to insure that the teeth on the spiral drum have the opportunity to make contact with each rock.

   b. Soil Condition
      Dry, firm ground is ideally suited for raking.

      Soft ground will require adjustments to the angling of the spiral drum to insure that the soil can fall between the teeth on the right end and not be moved into the windrow. It may also be necessary to have a lighter suspension system setting.

      Wet soil will ball up with the rocks and can plug the teeth. Give the soil more time to dry before raking.

      It is recommended that the teeth on the left end of the drum penetrate the ground about 1 inch (25 mm). Soft soil conditions require a lighter flotation; Hard soil a heavier flotation. (Refer to Page 41).

   c. Rock Size:

2 - 4 inches (51 - 102 mm)	Small
5 - 8 inches (127 - 204 mm)	Medium
9 - 12 inches (230 - 306 mm)	Large

NOTE

The occasional rock between 12-18 inches can be raked but heavy concentrations of rocks in this range must be removed from the field and not windrowed.

3. Machine Settings

a. Raking Angle

The raking angle is defined as the angle of the spiral drum as it moves down the field.

This angle controls the amount of lateral movement given to a rock when contacted by the teeth. The normal setting should be in the center hole to give a drum angle of 20°. Other working angles are available to handle unusual field conditions.

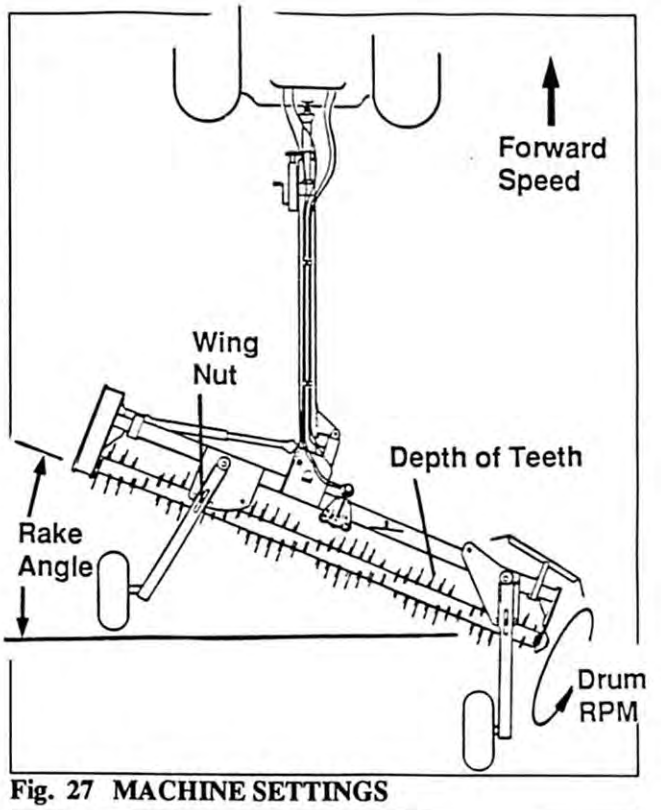

Fig. 27 MACHINE SETTINGS

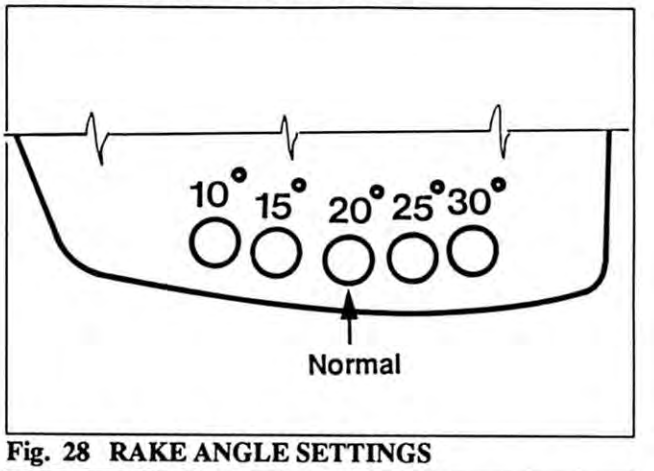

Fig. 28 RAKE ANGLE SETTINGS

b. Depth of Teeth

The springs and hydraulic cylinder in the center of the machine control the effective ground contact pressure of the spiral drum.

The floating arm pin is removed for normal field operation and the springs carry the weight of the spiral drum.

Normally three springs with minimum tension are used to provide flotation. Refer to Page 41 to set spring tension.

It is recommended that the teeth on the left end of the drum penetrate the ground about 1 inch (25 mm). Soft soil conditions require a lighter flotation; Hard soil a heavier flotation.



Fig. 29 SUSPENSION SYSTEM

c. Drum Rotation
The drum rotates at 170 RPM when the tractor PTO speed is 540 RPM. Changing the engine speed changes the drum RPM. It is recommended that the PTO/Drum speed always be run at rated RPM and the ground speed be varied by changing gears in the tractor.

A drum speed of 170 RPM will form the best rock windrow for gathering with a Degelman Rock Picker.

d. Forward Speed
The recommended ground speed varies from 2 to 6 mph (3.2 - 9.7 km/h) and is determined by rock density and size. When you see that rocks are being missed behind the machine, slow down. Increase the speed when the rock density decreases.

e. Spiral Drum Angle
The angle that the spiral drum makes when it contacts the ground is defined as the spiral drum angle. It can be varied by moving the wheel mount clamps on the end of each wheel leg.

It is recommended that the right end of the drum be set 1 - 1 1/2 inches (25-40 mm) higher than the left end. Refer to Page 43). This will allow the soil picked up with the rocks to fall through the teeth at the right end and not become part of the rock windrow. Picking will be much easier when the windrow does not include soil.

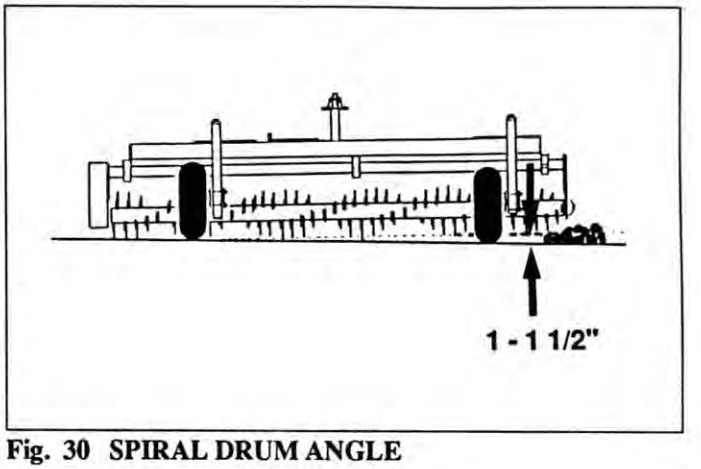

Fig. 30 SPIRAL DRUM ANGLE

4. Attach the machine to a tractor by following the procedures in Section 4.5.2.

5. Review and follow the Pre-Operation Checklist.

6. Convert the machine to the field configuration by referring to Section 4.6.

7. Set the machine parameters to reflect the field operating conditions.

8. The Rock Rake is designed to move widely spaced rocks into a windrow to allow for easy and convenient picking. Picking from a windrow takes much less time than driving all over a field.

9. Rock windrows can be formed on a once over basis or doubled up depending on the rock density. A windrow should not be made so large that a picker cannot handle it.

10. Double windrows can be formed by picking up a light existing windrow with the left end of the drum and raking it to the right.

    The second method for doubling up on windrows is to go up the field turn around and rake the rocks over into the previous windrow.

11. It is recommended that the machine be shifted laterally with the hydraulic angling cylinder when putting two windrows together. In this way the windrow will not interfere with the tractor wheels.

CAUTION

Be sure the safety bolt is in place and secured before shifting the pole.

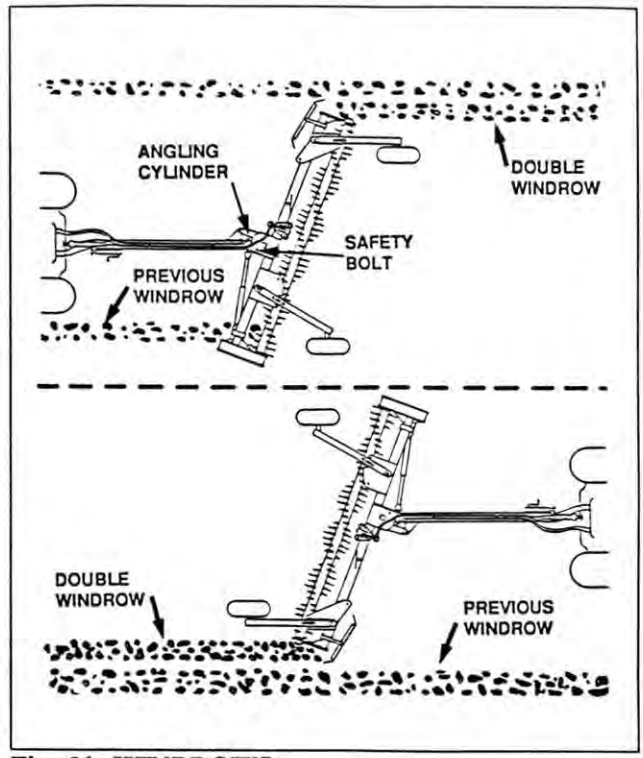

Fig. 31 WINDROWS

12. When starting to work, lower the spiral drum to the ground with the hydraulic cylinder and let the suspension system springs pick up the weight.

    The floating arm should be in the center of its working range. Extend or retract the cylinder to give the required angle. This will allow the drum to float over obstacles or ground contours during operation.

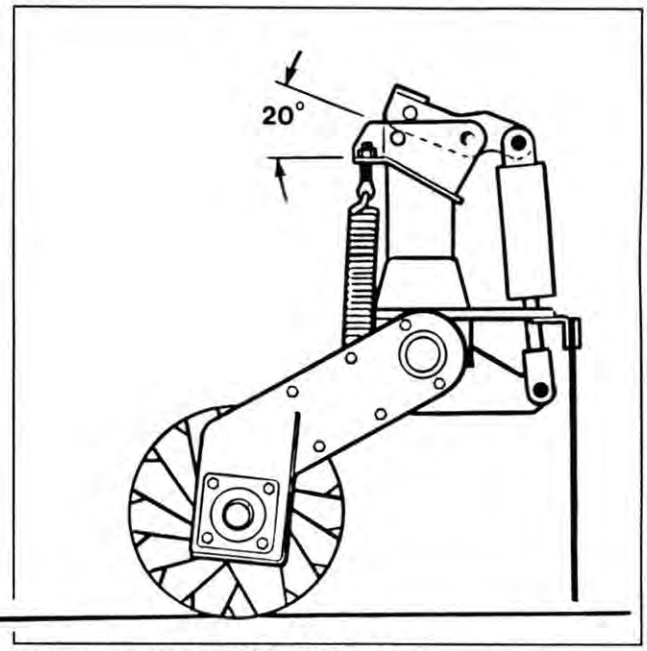

Fig. 32 SUSPENSION SYSTEM

13. Pass over the field until the areas of the field with rocks has been windrowed.

4.8 TRANSPORTING

⚠ TRANSPORT SAFETY

1. Use only a drawbar pin with a mechanical retainer.
2. Always install the safety chain between the drawbar and hitch pole.
3. Clean the SMV, lights and reflectors before starting.
4. Always use hazard flashers on the tractor.
5. Install the safety lock pin in the center frame and the suspension system pin before transporting.
6. Travel at a safe speed. Use care when making corners or meeting traffic.
7. Do not exceed 20 mph (32 km/h).
8. Do not allow riders.

The machine is designed to provide two different configurations for transporting; wide and narrow transport. Review Section 4.6 on the safe procedure to convert configurations.

When preparing to transport, follow this procedure:

1. Attach tractor to the machine by following the procedure in Section 4.5.2.
2. Convert the machine into the configuration appropriate for the transport route.
3. Be sure the safety lock pin in the center frame and the floating arm lock pin are installed.
4. Be sure the SMV is facing to the rear.
5. Clean the SMV, lights and reflectors.
6. Always use the hazard flashers on the tractor when transporting.
7. Slow down and pull off to the side of the road when meeting other traffic.
8. Do not exceed 20 mph (32 km/h) when transporting. Never exceed a safe travel speed. Slow down when cornering or on rough roads.
9. Do not allow riders on the machine or tractor when transporting.

4.9 STORAGE

⚠ STORAGE SAFETY

1. Store in an area away from human activity.
2. Do not allow children to play on or around the stored unit.

After the season's use, completely inspect all major systems of the machine. Repair or replace any worn or damaged components to prevent unnecessary down time at the beginning of next season. The machine should be carefully prepared for storage to insure that all dirt, mud, debris and moisture has been removed.

Follow this procedure when preparing to store:

1. Wash the entire machine thoroughly using a water hose or pressure washer to remove all dirt, mud debris or residue.
2. Inspect all moving or rotating parts to see if anything has become entangled in them. Remove the entangled material.
3. Lubricate all grease fittings to remove any moisture in the bearings.
4. Run the machine slowly for 1 minute to distribute lubricant to all surfaces.
5. Inspect all hydraulic hoses, fittings, lines and couplers. Tighten any loose fittings. Replace any hose that is badly cut, nicked or abraded or is separating from the crimped end of the fitting.
6. Touch up all paint nicks and scratches to prevent rusting.
7. Oil the exposed rams on the hydraulic cylinders to prevent rusting.
8. Select an area that is dry, level and free of debris.
9. Follow the procedure given in Section 4.5.2 when unhooking.

5 SERVICE AND MAINTENANCE

MAINTENANCE SAFETY

1. Review the Operator's Manual and all safety items before working with, maintaining or operating the Rake.
2. Lower rake, stop the tractor engine, place all controls in neutral, set park brake, remove ignition key and wait for all moving parts to stop before servicing, adjusting, repairing or unplugging.
3. Keep hands, feet, clothing and hair away from all moving and/or rotating parts.
4. Clear the area of bystanders, especially children, when carrying out any maintenance and repairs or making any adjustments.
5. Place safety stands or large blocks under the frame before removing tires or working beneath the machine.
6. Be careful when working around or maintaining a high-pressure hydraulic system. Wear proper eye and hand protection when searching for a high-pressure hydraulic leak. Use a piece of wood or cardboard as a backstop when searching for a pin hole leak in a hose or a fitting.
7. Always relieve pressure before disconnecting or working on hydraulic system.

5.1 SERVICE

5.1.1 FLUIDS AND LUBRICANTS

1. Grease
   Use an SAE multi-purpose high temperature grease with extreme pressure (EP) performance. Also acceptable is an SAE multi-purpose lithium base grease.
2. Gearbox Reservoir Oil
   Use an SAE 85W90 gear oil for all operating conditions.
   Reservoir capacity: 1 1/2 quart (1.5 liter)
3. Chain Case Reservoir Oil
   Use an SAE 85W90 gear oil for all operating conditions.
   Reservoir Capacity: 2 quarts (2 liters)
4. Storing Lubricants
   Your machine can operate at top efficiency only if clean lubricants are used. Use clean containers to handle all lubricants. store them in an area protected from dust, moisture and other contaminents.

5.1.2 GREASING

Use the Maintenance Checklist provided to keep a record of all scheduled maintenance.

1. Use only a hand-held grease gun for all greasing.
2. Wipe grease fitting with a clean cloth before greasing, to avoid injecting dirt.
3. Replace and repair broken fittings immediately.
4. If fittings will not take grease, remove and clean thoroughly. Also clean lubricant passageway. Replace fitting if necessary.
5. Inject grease until you see the grease being expelled from the bearing or bushing areas.

5.1.3 SERVICING INTERVALS

8 Hours or Daily

1. Lubricate Spiral Drum Hanger Bearings (3 locations).



Fig. 33 HANGER BEARINGS

2. Check the oil level in the chain drive reservoir. It should just touch the chain when the drum is resting on the ground. Add as required.



Fig. 34 CHAIN DRIVE RESERVOIR

8 Hours

1. Lubricate all Universal Joints.

   a. PTO Driveline (2 locations).
   Paint the inner telescoping shaft with grease.

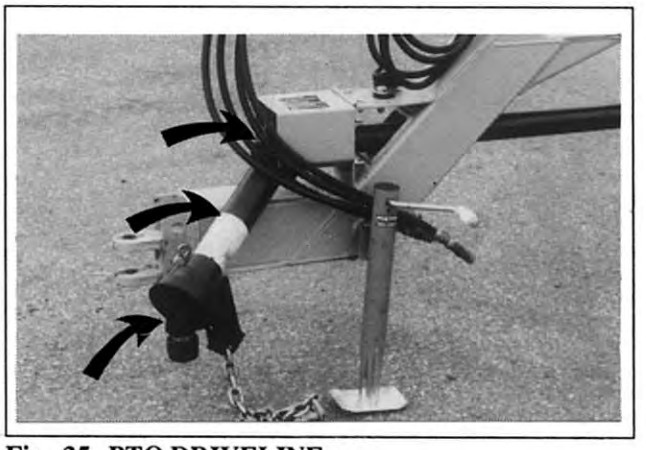

Fig. 35 PTO DRIVELINE

   b. At Torque Limiter into Gearbox (1 location).



Fig. 36 TORQUE LIMITER

   c. Cross Driveline (3 locations).

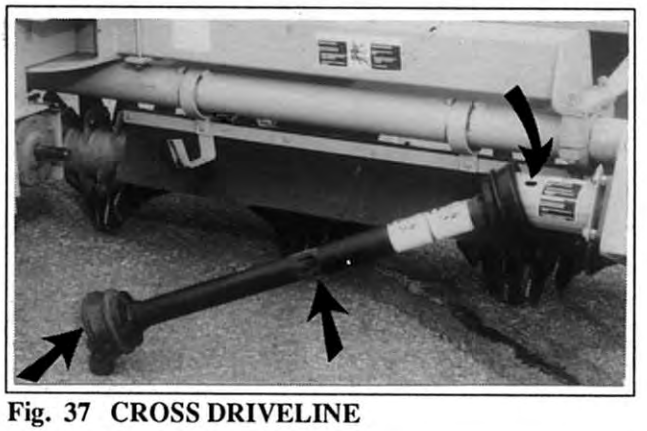

Fig. 37 CROSS DRIVELINE

2. Check the oil level in the gearbox reservoir. Add as required.

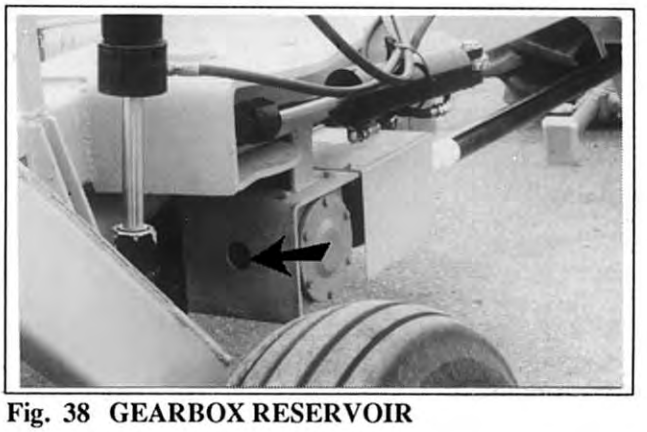

Fig. 38 GEARBOX RESERVOIR

25 Hours

1. Lubricate driveline hanger bearing (1 location).

CAUTION

Shield is shown open for illustrative purposes only. Close shield before operating.



Fig. 39 DRIVELINE HANGER BEARINGS

2. Lubricate chain drive bearings (3 locations).

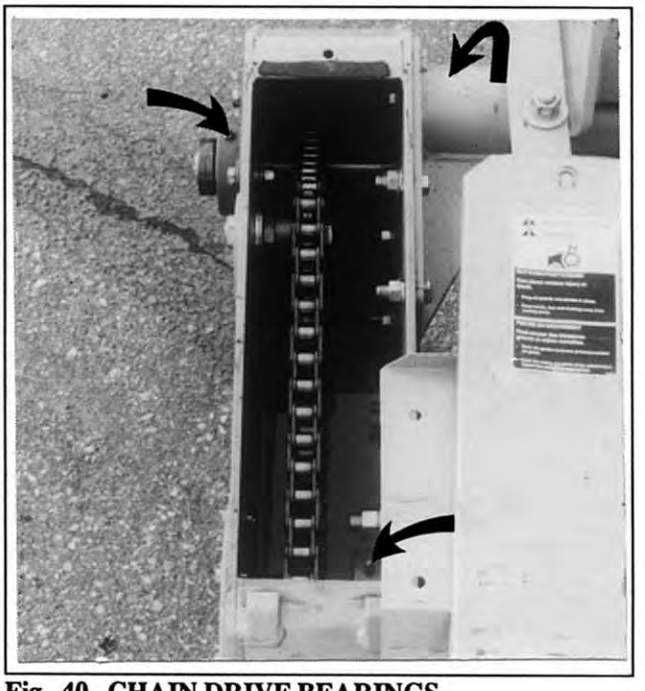

Fig. 40 CHAIN DRIVE BEARINGS

3. Lubricate spiral drum bearings (1 location).



Fig. 41 SPIRAL DRUM BEARING

4. Oil suspension system pivot pin.

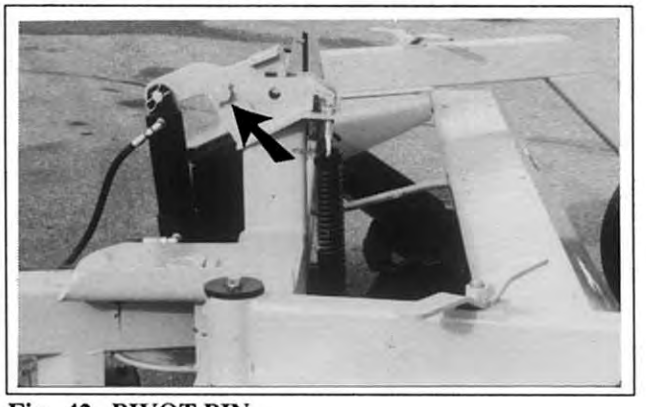

Fig. 42 PIVOT PIN

50 Hours

1. Lubricate hitch jack.

NOTE

Not all jacks are equipped with a grease fitting.

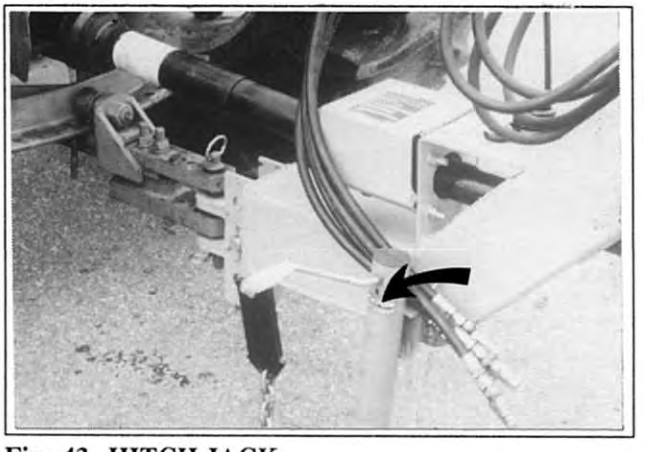

Fig. 43 HITCH JACK

2. Lubricate wheel leg pivots (2 locations).

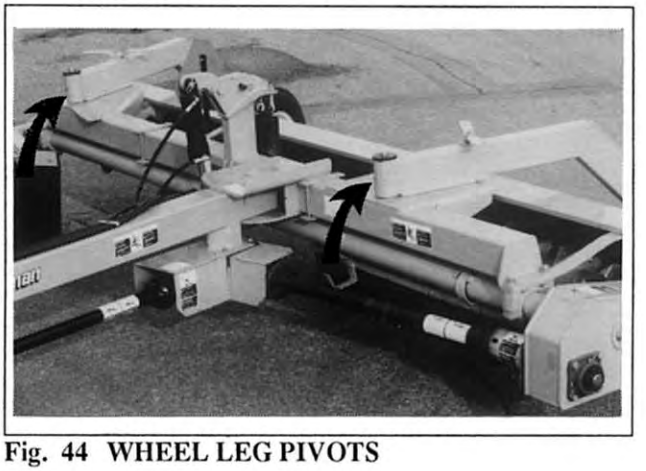

Fig. 44 WHEEL LEG PIVOTS

3. Lubricate center frame pivot (1 location).

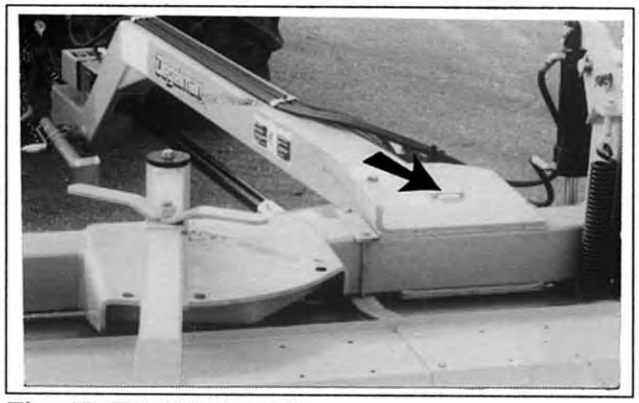

Fig. 45 FRAME PIVOT

Annually

1. Repack wheel bearings.



Fig. 46 WHEEL BEARING

2. Coat hydraulic cylinder rods with oil before storage.

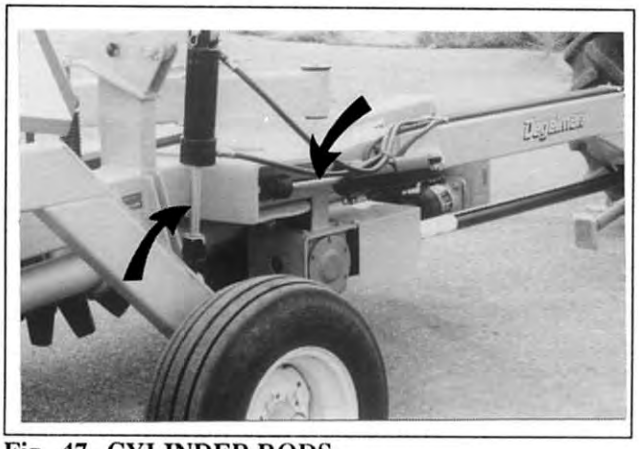

Fig. 47 CYLINDER RODS

5.1.4 SERVICE RECORD

See Lubrication and Maintenance sections for details of service. Copy this page to continue record.

ACTION CODE: ✔ CHECK C CHANGE CL CLEAN
L LUBRICATE R REPLACE

MAINTENANCE / HOURS / SERVICED BY																	
8 HOURS																	
L Spiral Drum Hanger Brgs. (3)																	
✔ Oil Level Chain Drive Reservoir																	
L All Universal Joints																	
L PTO Driveline (3)																	
L Torque Limiter into Gearbox (1)																	
L Cross Driveline (3)																	
✔ Oil Level In Gearbox Reservoir																	
25 HOURS																	
L Driveline Hanger Bearing (1)																	
L Chain Drive Bearings (3)																	
L Spiral Drum Bearing (1)																	
L Suspension System Pivot Pin																	
50 HOURS																	
L Hitch Jack																	
L Wheel Leg Pivots (2)																	
L Center Frame Pivot (1)																	
ANNUALLY																	
L Wheel Bearings																	
L Hydraulic Cylinder Rods																	

5.2 ADJUSTMENTS

5.2.1 HITCH CLEVIS

The hitch pole should always be set to be parallel to the ground when attached to the tractor. To set this angle, follow this procedure:

1. Clear the area of bystanders, especially small children.
2. Install the drawbar pin to attach the clevis to the tractor.
3. Use the hitch jack to lower the hitch and transfer the weight to the drawbar.
4. Step back and check to see if the pole is parallel to the ground.
5. If it isn't, use the jack to raise the pole and center the clevis to the drawbar.
6. Remove the clevis mounting pin.
7. Move the clevis up or down as required.
8. Install the clevis mounting pin and retainer.
9. Lower the hitch and check the pole angle again.



Fig. 48 HITCH CLEVIS

5.2.2 TORQUE LIMITER

A torque limiting slip clutch is located in the drivetrain ahead of the gearbox. Its purpose is to protect the gearbox and drivetrain from shock loads.

The spring tension is pre-set at the factory to a spring dimension of 2 3/16 inches (55.6 mm). With this dimension, the limiter will provide the desired shock load protection to the system.

If the limiter repeatedly slips while working in the field, tighten the nuts on each spring 1/2 turn. Try the machine in the field again. Remember, do not overtighten the springs. The limiter must be able to slip when it encounters a shock load but hold during normal operating conditions. Overtightening can result in damage to the gearbox or other drivetrain components.

After prolonged storage periods, it is recommended that the operator loosen the nuts on the compression springs. Run the machine momentarily to wear away any corrosion that has formed on the friction plates and mating surfaces. Retighten the nuts to give a spring dimension of 2 3/16 inches (55.6 mm). This procedure will insure that the friction surfaces are kept in good condition.

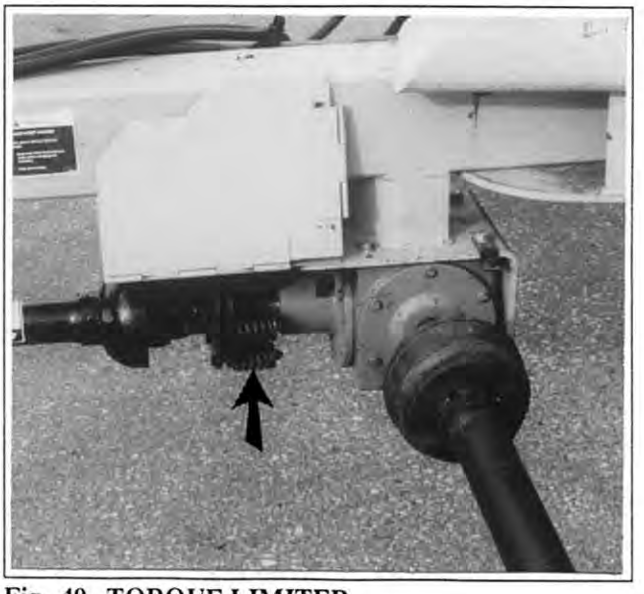

Fig. 49 TORQUE LIMITER

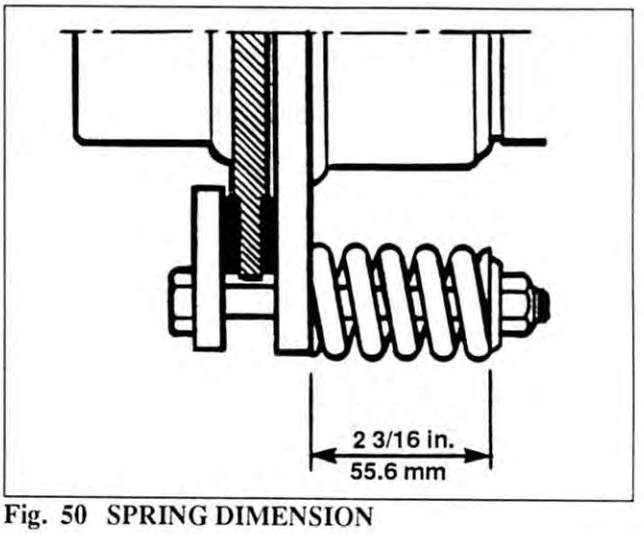

Fig. 50 SPRING DIMENSION

5.2.3 SUSPENSION SYSTEM

The spiral drum is supported on springs to carry part of the weight. It provides a suspension system that allows the drum to float over obstacles encountered in the field and reduces the shock loads.

To set the initial tension:

1. Turn the nut on each eyebolt until there is approximately 1 1/2 - 2 threads past the nut.

2. Operate the Rake in the field to determine its performance. Adjust the spring tension as required.

3. The best field performance requires that the teeth on the drum penetrate the ground 1 inch (25 mm) and yet provide enough flotation to lift the drum over field obstacles to prevent shock loads.

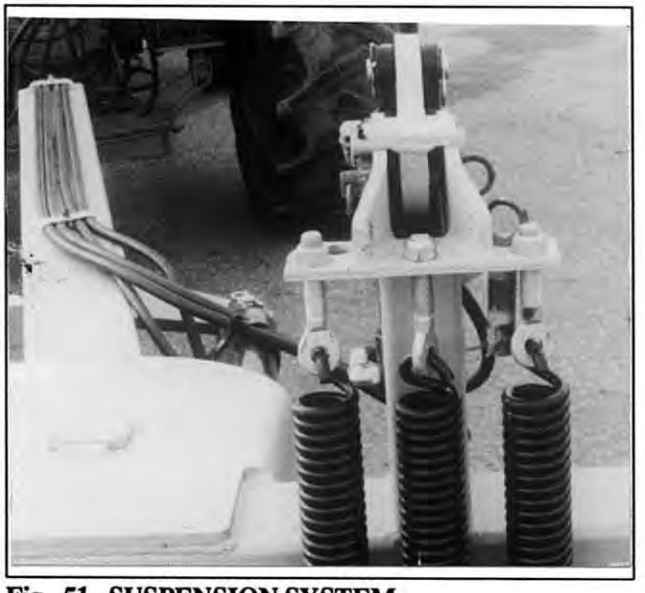

Fig. 51 SUSPENSION SYSTEM

4. The machine is equipped with 3 springs in the suspension system. For most field conditions, it is recommended to use all 3 springs set at a minimum tension. However should more drum weight be desired the centre spring can be removed on occasion.

5. To remove the center spring, loosen the nut on its eyebolt. Store the removed spring where it will be available when needed.

6. Readjust the remaining two springs to give the desired flotation.



Fig. 52 TWO SPRINGS

5.2.4 CHAIN TENSION

The tension of the spiral drum roller chain drive should be checked frequently. Remove the top cover to access the chain.

1. The recommended tension provides for 1/2 inch (12 mm) sag in the lower span.

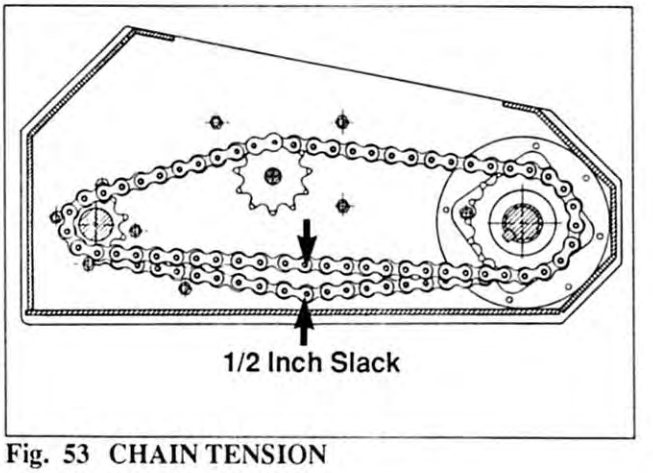

Fig. 53 CHAIN TENSION

2. To adjust the tension, loosen the idler nut and move the idler sprocket to the required position.

3. Move the idler cover over the slotted hole to seal the reservoir.

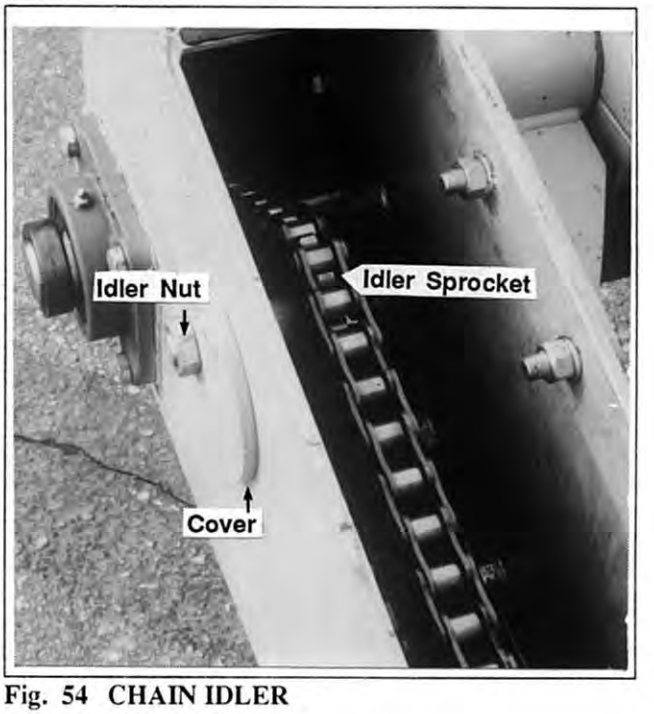

Fig. 54 CHAIN IDLER

5.2.5 WHEEL HEIGHT

The height of the wheels can be set to work in any field condition. To adjust, follow this procedure:

1. Clear the area of bystanders, especially small children before starting.

2. Use the hydraulics to lower the spiral drum to the ground and raise the wheels off the ground.

3. Place safety stands or large blocks under the end of the wheel leg to prevent the leg from dropping while moving the wheel.

4. Loosen the axle bolt plate and slide the wheel to the new position. Retighten bolts.

5. Repeat with the other wheel assembly.



Fig. 55 AXLE ASSEMBLY

6. The wheel height can be used to adjust the angle that the drum makes with the ground.

7. For best field performance, it is recommended that the left end of the drum be set 1 - 1 1/2 inches (25 - 40 mm) lower than the right end.

   By setting the right end of the drum higher than the left, soil will drop out of the rocks and not become part of the windrow.

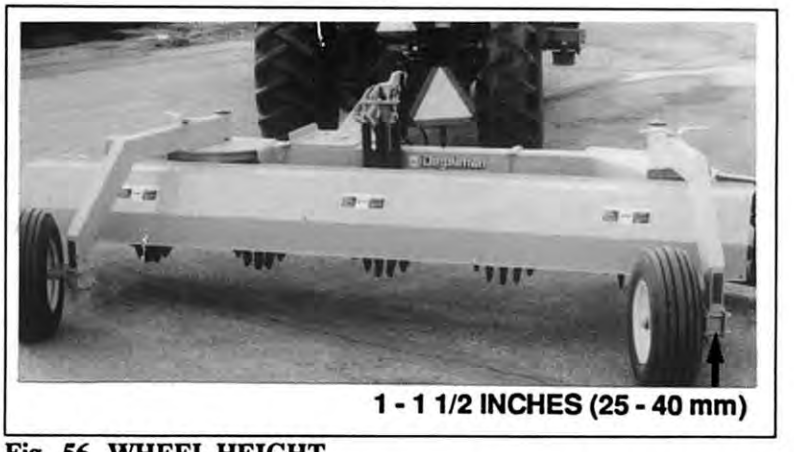

Fig. 56 WHEEL HEIGHT

5.2.6 SPACER SHIMS

After prolonged use, the rock shaft and its hanger castings can wear and become loose. To tighten this area, follow this procedure:

1. Loosen the bolts connecting the hangers.
2. Remove the shims. (1 per side).
3. Tighten the bolts.
4. Repeat the procedure on the other 2 hangers.

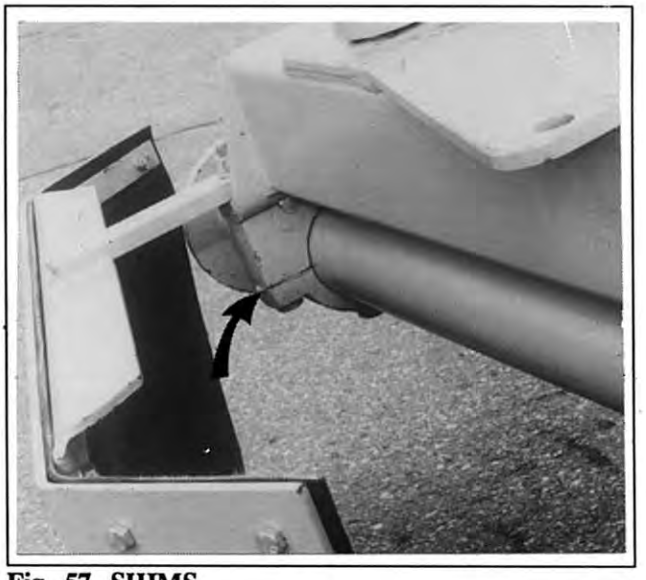

Fig. 57 SHIMS

5.2.7 ROLLER CHAIN LINK REMOVAL

If chain link wear is noticed, it may be caused by sprocket misalignment. To check and align sprockets, follow this procedure:

1. Check to determine which sprocket needs aligning. Each sprocket must be 2 1/8 inches (54 mm) from the side of the chain case. The idler sprocket is fixed at this dimension.

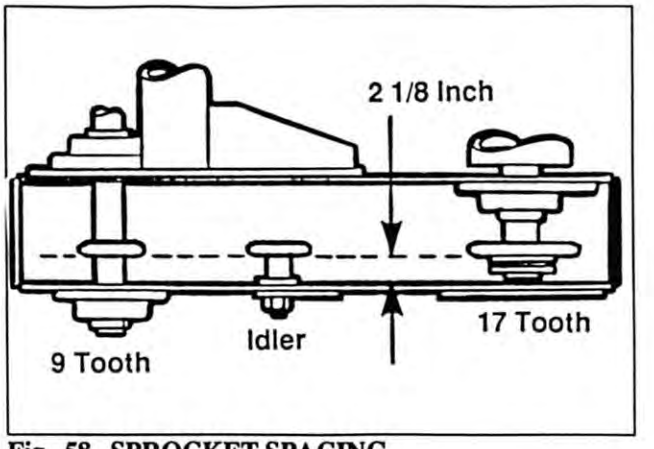

Fig. 58 SPROCKET SPACING

2. If the 9 tooth sprocket is misaligned, loosen the set screws on the locking collars and then loosen lock collars.

3. Tap the sprocket into position.

4. Tighten the outboard lock collar by turning clockwise and the inboard collar by turning counter-clockwise. Tighten the set screws.

5. If the spiral drum sprocket is misaligned, remove the bolts on the split bushing and thread two of them into threaded holes. Tighten both bolts evenly until bushing dislodges.

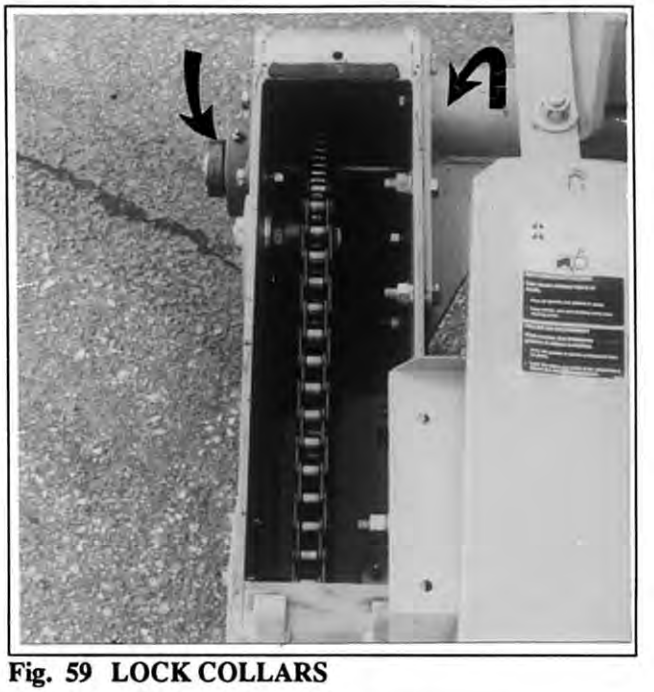
Fig. 59 LOCK COLLARS

6. Reposition the sprocket and secure by reinstalling the split bushing and tightening the three bolts evenly.

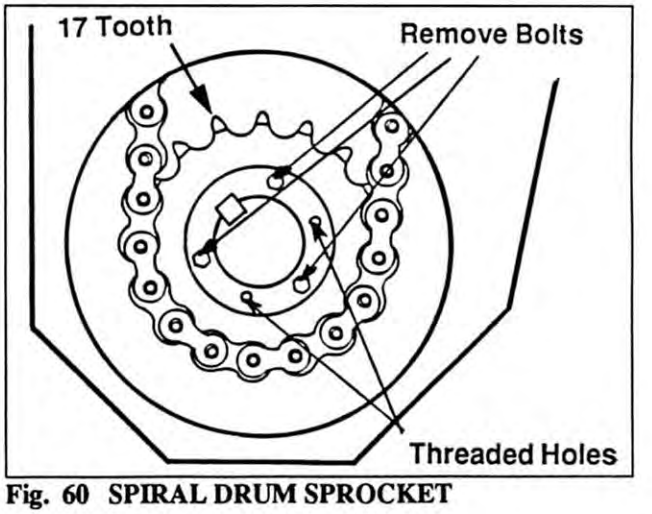

Fig. 60 SPIRAL DRUM SPROCKET

5.2.8 CHAIN SHORTENING

After prolonged use, the chain will stretch beyond the ability of the tightener to take up the slack. It will be necessary to shorten the chain by removing an offset link.

Remove cotter pins, link pins and offset link. Reconnect chain. Readjust the chain tension.

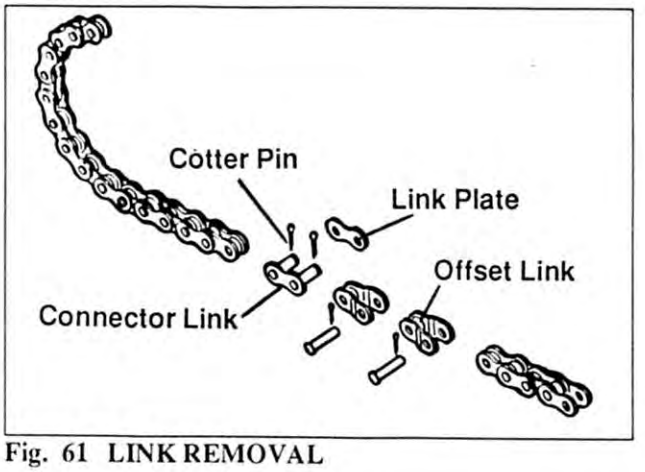

Fig. 61 LINK REMOVAL

5.2.9 REVERSING TEETH

The teeth on the spiral drum are designed to be reversed when one side becomes worn. To reverse, remove mounting bolts. Reverse tooth and tighten mounting bolts. Be sure to install the tooth on the right hand side of the tooth holder.

IMPORTANT

Torque all tooth bolts to 215 ft-lbs (290 N.m).



Fig. 62 TEETH

5.3 REPAIR

5.3 1 BEARING REPLACEMENT

When bearing noise becomes evident, replacement of the bearing is necessary. Whether the complete bearing unit or just the bearing insert was purchased, proceed as follows:

WARNING

Before removing bearing unit be sure affected areas are securely blocked up and the PTO driveline is disconnected from the tractor.

1. Loosen set screw with allen wrench.
2. Use drift punch and hammer to loosen lock collar.

NOTE

Lock collar loosens opposite the direction of rotation.

3. Remove lock collar and bolts.
4. Pull bearing unit from shaft and replace.
5. Relocate lock collar and tighten in direction shown.
6. Tighten set screw.
7. Lubricate grease fitting.

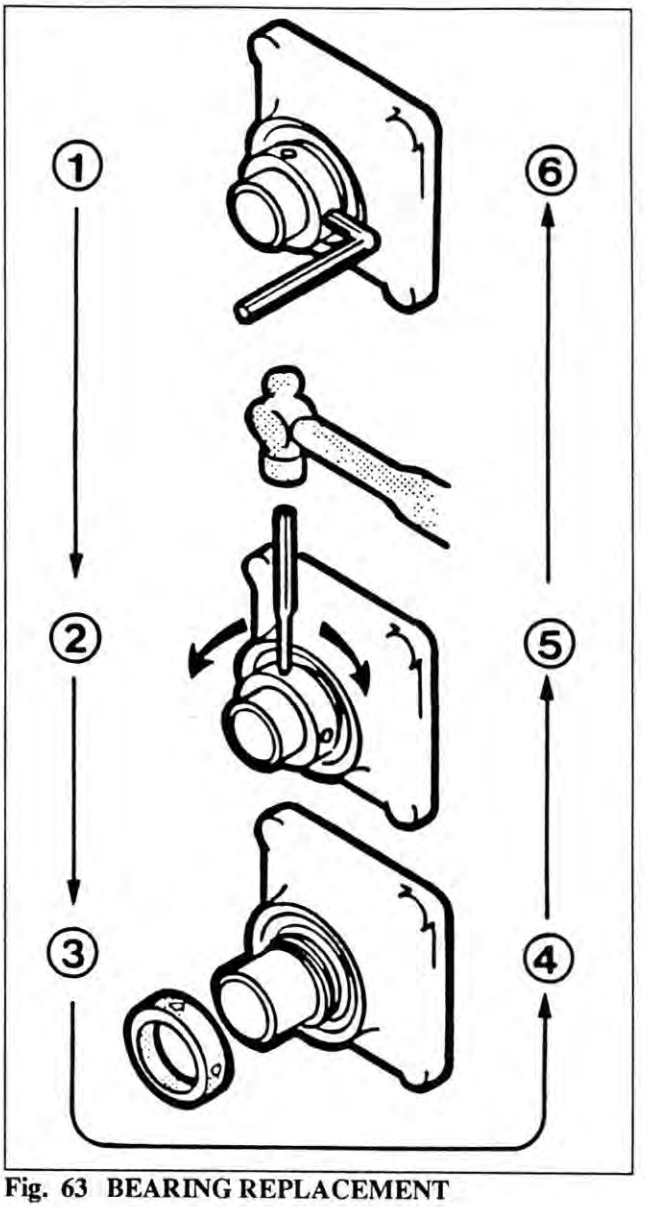

Fig. 63 BEARING REPLACEMENT

5.3 2 UNIVERSAL JOINT REPAIR

Universal joints are simply constructed and easily repaired. When repair becomes necessary, proceed as follows:

U-JOINT DISASSEMBLY

1. Pry off metal ring which secures the driveline guard in place.

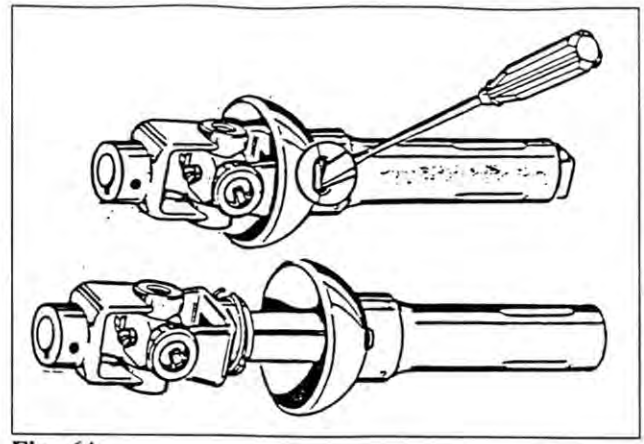

Fig. 64

2. Remove snap rings.

NOTE

If snap rings stick, loosen by tapping lightly on ends of bearing with a soft brass drift.

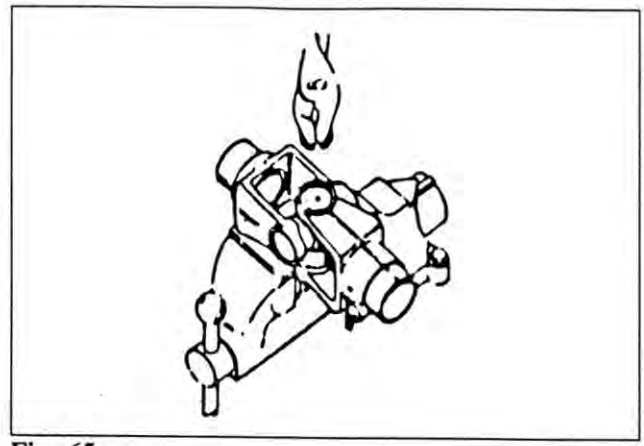

Fig. 65

3. With drive shaft clamped in vice and end fitting held in palm of hand, tap yoke as illustrated, to work bearing outward and up.

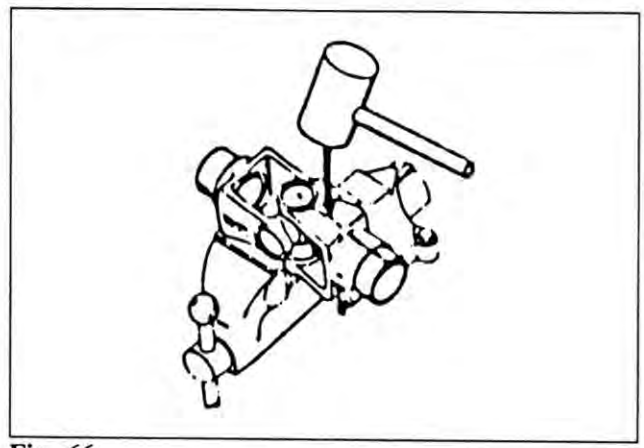

Fig. 66

4. Clamp protruding bearing in vice. Tap yoke off bearing.
5. Turn joint over and tap exposed end of cross to remove second bearing.
6. Remove yoke.

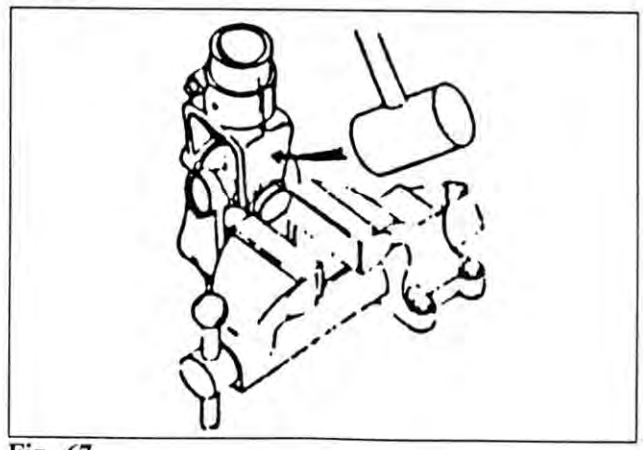

Fig. 67

U-JOINT ASSEMBLY

1. Clamp end yoke lightly in vise, with grease fitting facing away from shaft.
2. Lift shaft to raise cross, permitting bearing to position itself on cross.
3. Tap bearing down to insert first snap ring.

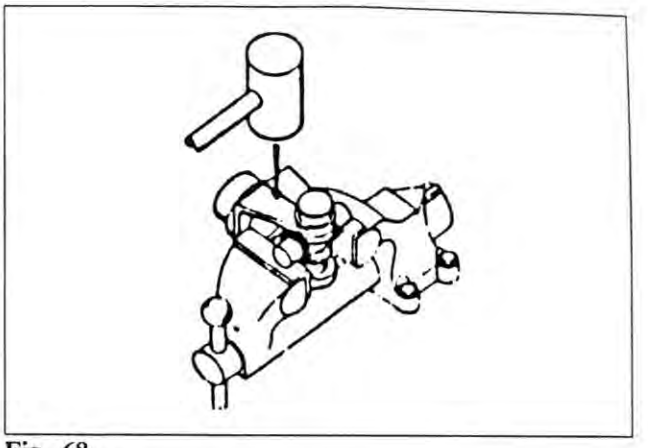

Fig. 68

4. Assemble snap ring.

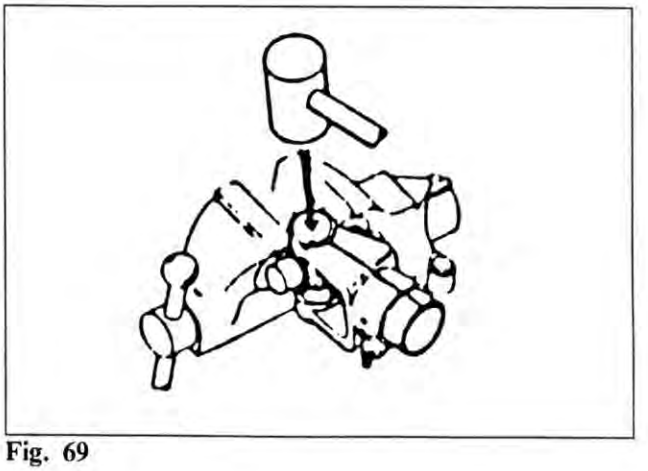

Fig. 69

5. Turn shaft to bring second cross hole to top position.
6. Clamp end yoke lightly in vise.
7. Lift shaft to raise cross permitting bearing to position itself on end of cross.
8. Be careful not to dislodge roller bearings.
9. Tap bearing down to assemble second snap ring.
10. The joint should flex freely. If joint is stiff sharply strike yoke lugs as illustrated.

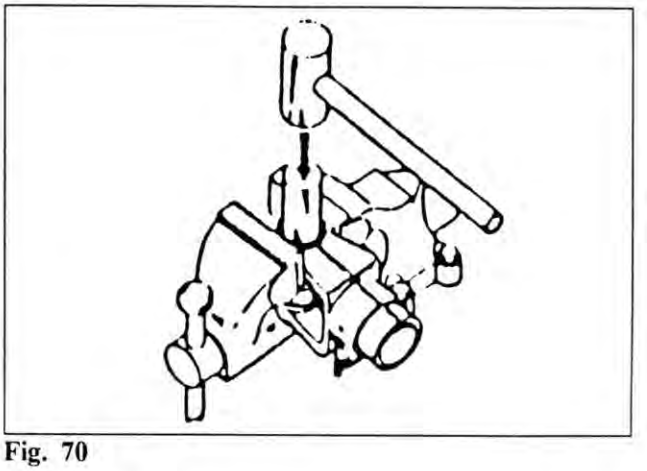

Fig. 70

11. Reassemble protective shield and reinstall metal ring.

5.3.3 TORQUE LIMITER REPAIR

DISASSEMBLY

1. With torque limiter held in vise remove lock nuts evenly.

2. Clean all parts and inspect for damage.

NOTE

Machined surfaces contacting the fibre disc must be flat, free of grooves. A 32 micro inch surface finish is preferable.

NOTE

Replace fibre disc if worn to 1/16 inch thickness.

3. If excessive wear is evident on the bronze bushing replace by removing U-joints and tap out bushing with a drift punch.

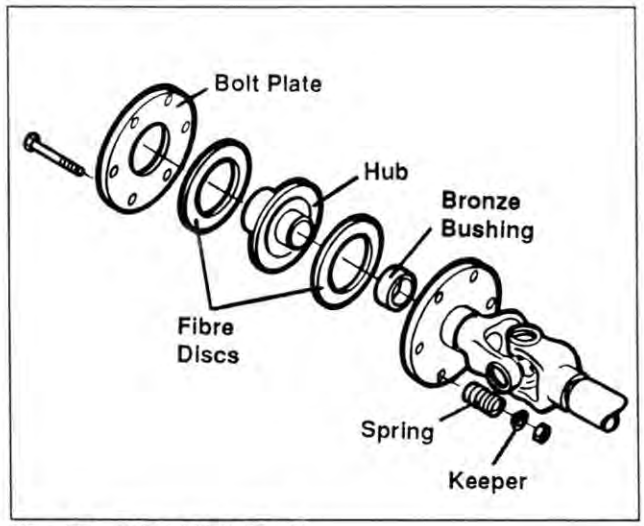

Fig. 71 DISASSEMBLY

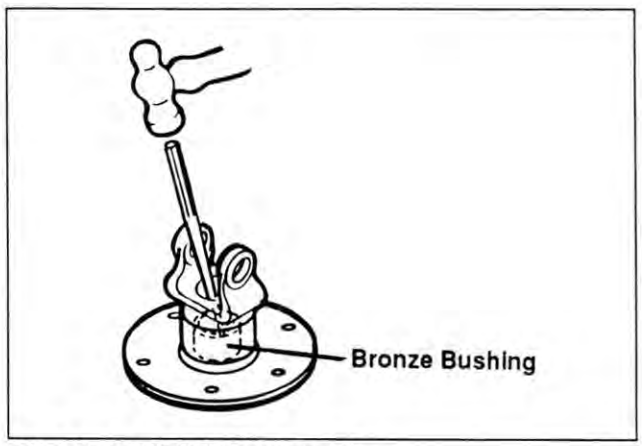

Fig. 72 BRONZE BUSHING

ASSEMBLY

1. Reinstall new bronze bushing using a suitable press.

2. Grease inside of bronze bushing.

3. Position fibre disc on both sides of hub and slide hub into bronze bushing.

4. Mount bolt plate and bolts.

5. Position springs and keepers over bolts and secure with lock nuts.

6. Set the initial tension of springs to a distance of 2 - 3/16 inch.

   Set final tension during field operation if required by turning each nut 1/2 turn.

CAUTION

Overtightening torque limiter will cause serious damage to gearbox.

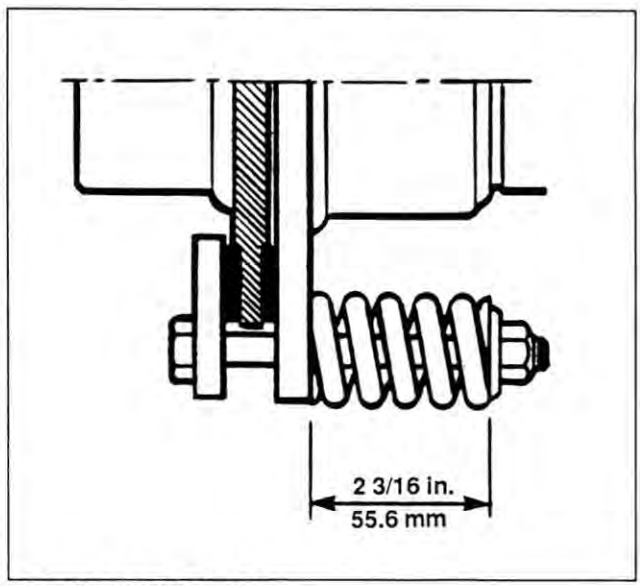

Fig. 73 ASSEMBLY

5.3.4 GEARBOX REPAIR

DISASSEMBLY

1. If internal parts are broken remove casing bolts and pull out input and output shafts to inspect for damage and wear.

2. Determine defective parts, dismantle and replace with new components.

ASSEMBLY

When replacement parts are installed in gearbox, quite often it becomes necessary to alter the number of gasket shims in locations A, B, or C to achieve minimum end play on shafts and minimum backlash of gears.

1. With input shaft and housing removed, install output shaft. Tighten bolts and check for excessive end play or binding. By removing a shim from location A end play is reduced and by adding a shim, binding is reduced.

2. To set input shaft gear, tighten lock nut until slight binding of bearing occurs. Then back off nut until binding is eliminated.

3. Assemble input shaft and housing and check that teeth backlash is at a minimum.

   If binding occurs add shims to location C. If excessive backlash is present, remove one shim at a time until backlash is at a minimum.

4. Tighten bolts evenly and check for minimum end play and backlash.

5. Fill gearbox to check hole with SAE # 90 gear oil.

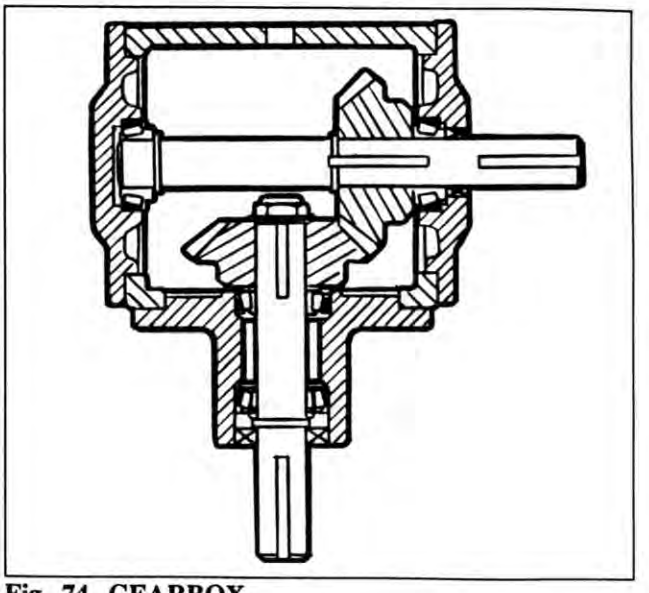

Fig. 74 GEARBOX

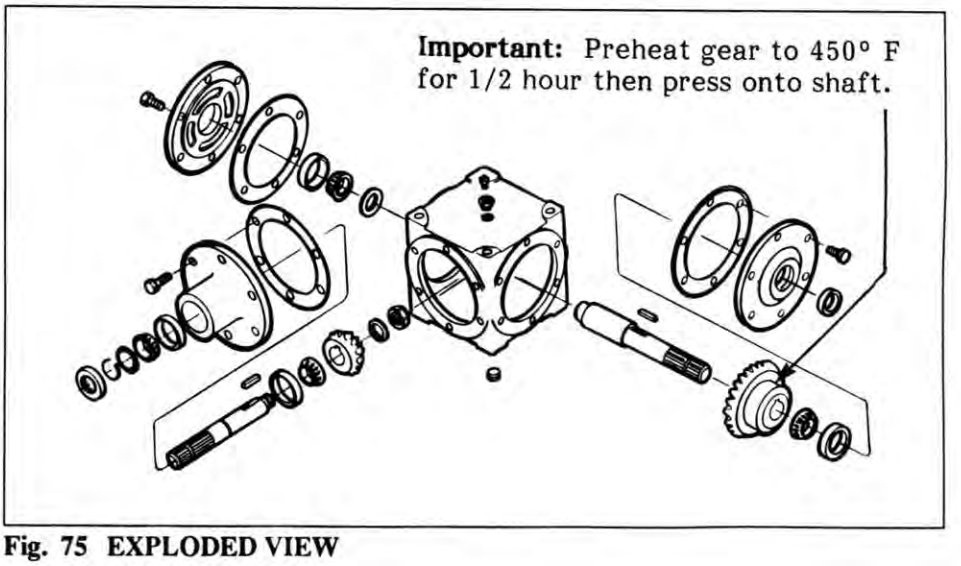

Fig. 75 EXPLODED VIEW

5.3.5 HYDRAULIC CYLINDER REPAIR

When cylinder repair is required, clean off unit, disconnect hoses and plug ports before removing cylinder.

NOTE

Complete rebuilt cylinders may be available. Contact your dealer for further information.

DISASSEMBLY

1. Loosen lock ring and turn off end cap.
2. Carefully remove piston, rod and cap combination.
3. Disassemble piston from rod by removing lock nut.

NOTE

DO NOT clamp rod by chromed surface.

4. Slide off end cap.
5. Remove seals and inspect all parts for damage.
6. Install new seals and replace damaged parts with new components.

ASSEMBLY

1. Reinstall rod through end cap.
2. Secure piston to rod with lock nut. Torque to 225 ft. lbs.
3. With cylinder body held gently in a vise, insert piston and rod combination using a slight rocking motion.
4. Thread lock ring fully onto barrel.
5. Turn end cap fully against lock ring then back off end cap to align ports.
6. Tighten lock ring against end cap using a punch and hammer.

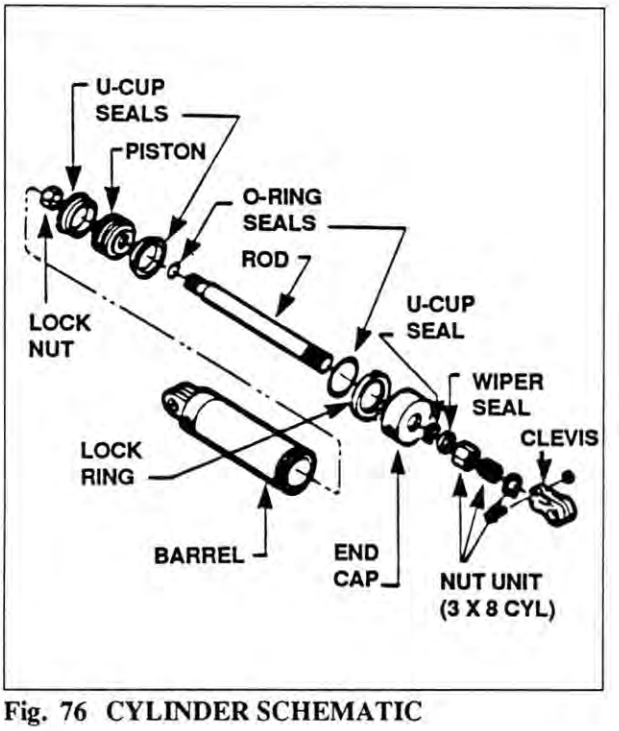

Fig. 76 CYLINDER SCHEMATIC

5.3.6 WHEEL HUB REPAIR

WARNING

Be sure to block up wheel leg before removing tires.

DISASSEMBLY

1. Carefully pry off dust cap.
2. Remove cotter pin from nut.
3. Remove nut and washer.
4. Pull hub off spindle.
5. Dislodge the inner cone bearing and dust seal.
6. Inspect cups that are press fitted into hub for pits or corrosion and remove if necessary.
7. Inspect and replace defective parts with new ones.

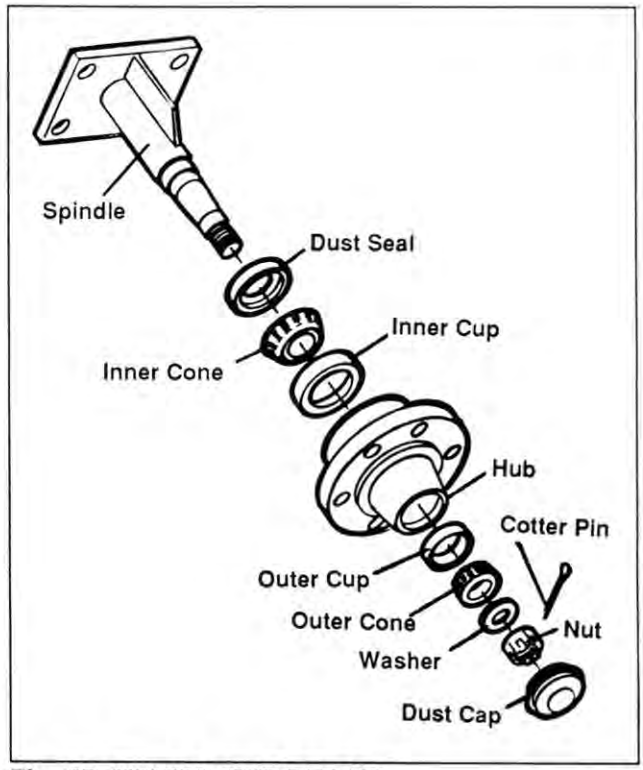

Fig. 77 WHEEL HUB REPAIR

ASSEMBLY

1. If cups need replacing, be careful to install them gently and evenly into hub until they are fully seated.
2. Apply a thick wall of grease inside hub. Pack grease in cones.
3. Install dust seal as illustrated, and inner cone.
4. Position hub onto spindle and fill surrounding cavity with grease.
5. Assemble outer cone, washer and nut.
6. Tighten nut while rotating hub until there is a slight drag.
7. Turn nut back approximately 1/2 turn to align cotter pin hole with notches on nut.
8. Install cotter pin and bend legs sideways over nut.
9. Fill dust cap half full of grease and gently tap into position.
10. Pump grease into hub through grease fitting until lubricant can be seen from dust seal.

5.3.7 TOOTH REPAIR AND HARD SURFACING

Hard surfacing should be done on a regular basis to prevent excess wear on teeth.

Build up worn portions of teeth to restore them to their original contour using a low hydrogien 7018 build up rod.

Resurface teeth (a double pass is recommended) using hard surface welding rods. A hardness of RC 45-50 is desirable.

NOTE

Special hard surfacing rod kits are available through Degelman Industries Ltd. or your local Degelman Dealer.

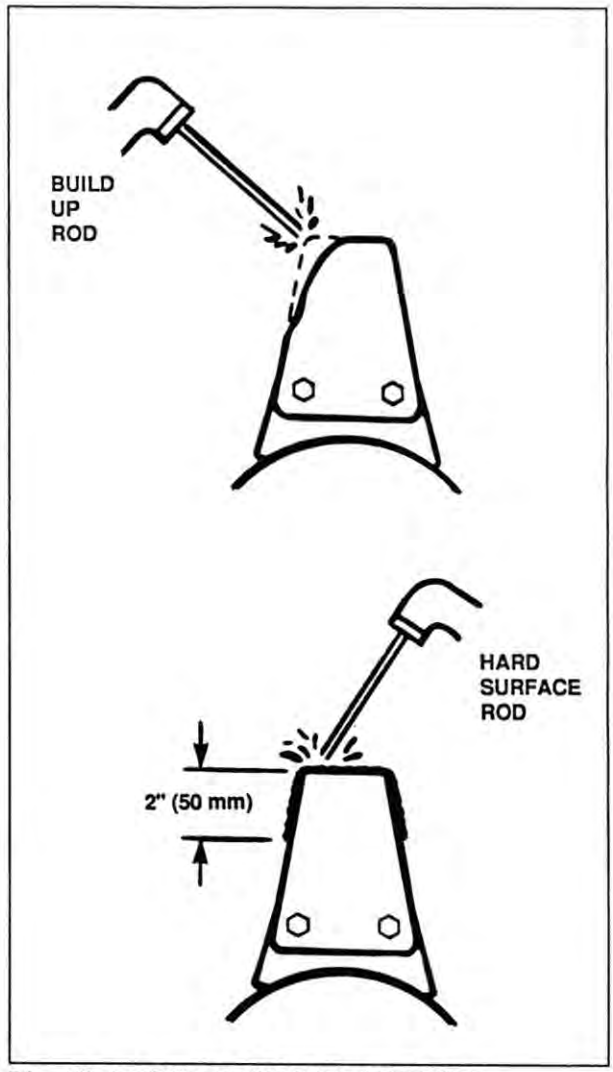

Fig. 78 RESURFACING PROCEDURE

6 TROUBLE SHOOTING

The Rock Rake uses a PTO drive to turn a toothed drum that move rocks into a windrow. It is a simple and reliable system that requires minimal maintenance.

In the following section, we have listed many of the problems, causes and solutions to the problems that you may encounter.

If you encounter a problem that is difficult to solve, even after having read through this trouble shooting section, please call you local dealer or distributor. Before you call, please have this Operator's Manual and the serial number from your unit ready.

PROBLEM	CAUSE	SOLUTION
Spiral drum doesn't turn.	No PTO power.	Check tractor PTO system. Check torque limiter. Retighten or replace as required. (Page 50).
Drum doesn't float.	Suspension system locked.	Remove floating arm safety pin. Adjust spring tension. (Page 41).
Dirt in windrow.	Drum is level.	Raise drum on right hand side of machine. (Page 43).
Rocks missed.	Drum too light.	Adjust suspension system to add weight to drum. (Remove 1 spring). (Page 41).
	Traveling too fast.	Slow down.
Rocks traveling too far.	Drum turning too fast.	Slow engine RPM.

7 SPECIFICATIONS

7.1 MECHANICAL

MODEL

- Degelman Rock Rake 1500

TRACTOR REQUIREMENTS

- Approximately 40-80 HP (30-60 kW).
- Hydraulic output pressure 1500-2500 psi (10,300-17,300 kPa).
- 540 or 1000 RPM PTO.

ROCK RAKE DIMENSIONS

- Ground clearance 10 inches (250 mm).
- Working width 10 1/2 ft. (3.2 m)
- Transport width
  Wide: 15 1/2 ft. (4.7 m)
  Narrow: 7 ft. 6 in. (2.3 m)
- Drum Length: 14 ft. (4.3 m)

FRAME CONSTRUCTION

- .250 inches (6.4 mm) wall HSST

WHEEL/HUBS

- Two 9.5L x 15 - 6 ply rating tubeless tires.
- 6 bolt rim.
- 2 inch (51 mm) dia axles.

HYDRAULICS (OPTIONAL)

- Two 3 x 8 inch stroke.

SAFETY FEATURES

- Mechanical safety pin.
- Drives are fully shielded and guarded.
- Safety decals throughout.

DRUM SPECS

- Reversable/replaceable teeth.
- Drum/teeth dia. 20 1/2 inch (520 mm).
- Floating drum - spring loaded.

DRIVE COMPONENTS

- 2:1 Gearbox (540 PTO)
- 3:1 Gearbox (1000 PTO)
- Heavy duty drivelines
- # 100 roller chain
- Heavy duty roller bearings

WEIGHT OF MACHINE

- 3500 lbs (1580 kg)

SPECIFICATIONS AND DESIGN SUBJECT TO CHANGE WITHOUT NOTICE

7.2 BOLT TORQUE

CHECKING BOLT TORQUE

The tables shown below give correct torque values for various bolts and capscrews. Tighten all bolts to the torques specified in chart unless otherwise noted. Check tightness of bolts periodically, using bolt torque chart as a guide. Replace hardware with the same strength bolt.

IMPERIAL TORQUE SPECIFICATIONS

BOLT DIAMETER "A"	BOLT TORQUE SAE 5 N.m	SAE 5 (ft-lb)	SAE 8 N.m	SAE 8 (ft-lb)
1/4"	12	(9)	16	(12)
5/16"	24	(18)	34	(25)
3/8"	41	(30)	51	(45)
7/16"	63	(50)	95	(70)
1/2"	101	(75)	149	(110)
9/16"	150	(110)	210	(155)
5/8"	210	(155)	290	(215)
3/4"	365	(270)	520	(385)
7/8"	590	(435)	840	(620)
1"	895	(660)	1250	(930)

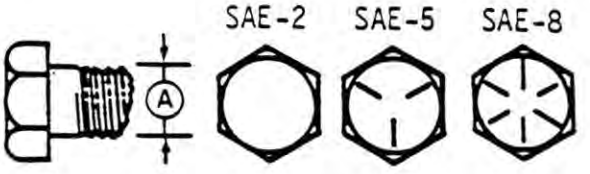

METRIC TORQUE SPECIFICATIONS

BOLT DIAMETER "A"	BOLT TORQUE 8.8 N.m	8.8 (ft-lb)	10.9 N.m	10.9 (ft-lb)
M3	.5	(.4)	1.8	(1.3)
M4	3	(2.2)	4.5	(3.3)
M5	6	(4)	9	(7)
M6	10	(7)	15	(11)
M8	25	(18)	35	(26)
M10	50	(37)	70	(52)
M12	90	(66)	125	(92)
M14	140	(103)	200	(148)
M15	225	(166)	310	(228)
M20	435	(321)	610	(450)
M24	750	(553)	1050	(774)

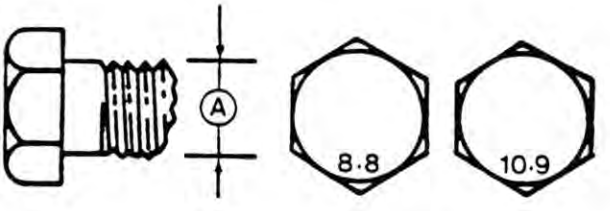

7.3 HYDRAULIC FITTING TORQUE

TIGHTENING FLARE TYPE TUBE FITTINGS *

1. Check flare and flare seat for defects that might cause leakage.
2. Align tube with fitting before tightening.
3. Lubricate connection and hand tighten swivel nut until snug.
4. To prevent twisting the tube(s), use two wrenches. Place one wrench on the connector body and with the second tighten the swivel nut to the torque shown.

* The torque values shown are based on lubricated connections as in reassembly.

Tube Size OD (in.)	Nut Size Across Flats (in.)	Torque Value* (N.m)	(lb-ft)	Recommended Turns to Tighten (After Finger Tightening) (Flats)	(Turns)
3/16	7/16	8	6	1	1/6
1/4	9/16	12	9	1	1/6
5/16	5/8	16	12	1	1/6
3/8	11/16	24	18	1	1/6
1/2	7/8	46	34	1	1/6
5/8	1	62	46	1	1/6
3/4	1-1/4	102	75	3/4	1/8
7/8	1-3/8	122	90	3/4	1/8

7.4 PUBLICATIONS

Additional copies of the manuals are available through your local dealer. If the dealer is unable to assist you, contact Degelman Industries Ltd. and order per Part No. below:

142350	Manual -	RR1500 - Operators
142351	Manual -	RR1500 - PTO Assembly
142352	Manual -	RR1500 - Parts

8 INDEX

A

PAGE

Adjustments 39
Chain Shortening 46
Chain Tension 42
Hitch Clevis 39
Reversing Teeth 46
Roller Chain Link Removal 45
Spacer Shims 44
Suspension System 41
Torque Limiter 40
Wheel Height 43

B

Break-In 13

C

Machine Positioning 18
Field Position to Narrow Transport 20
Field Position to Wide Transport 19
Narrow Transport to Field Position 23
Wide Transport for Field Position 19

E

Equipment Preparation 14
Rock Rake Preparation 15
Tractor Preparation 14

G

General Safety 3

H

Hydraulic Safety 5

I

Introduction 1

M

Maintenance Safety 4

O

PAGE

Operating 26
Operating Safety 4
Operation 11

P

Pre-Operation Checklist 13
Principles of Operation 12

R

Repair 47
Bearing Replacement 47
Hydraulic Cylinder Repair 52
Gearbox Repair 51
Tooth Repair and Hard Surfacing 54
Torque Limiter Repair 50
Universal Joint Repair 48
Wheel Hub Repair 53

S

Safety 2
Safety Decal Locations 8
Safety Decals 6
Service 32
Fluids and Lubricants 32
Greasing 32
Service Record 38
Servicing Intervals 33
Service and Maintenance 32
Sign-Off Form 7
Specifications 56
Bolt Torque 57
Hydraulic Fitting Torque 58
Mechanical 56
Publications 59
Storage 31
Storage Safety 6

T

Tire Safety 6
To the New Operator or Owner 11
Transporting 30
Transport Safety 5
Trouble Shooting 55

Assembly Instructions for the TORQMASTER Modular Clutch

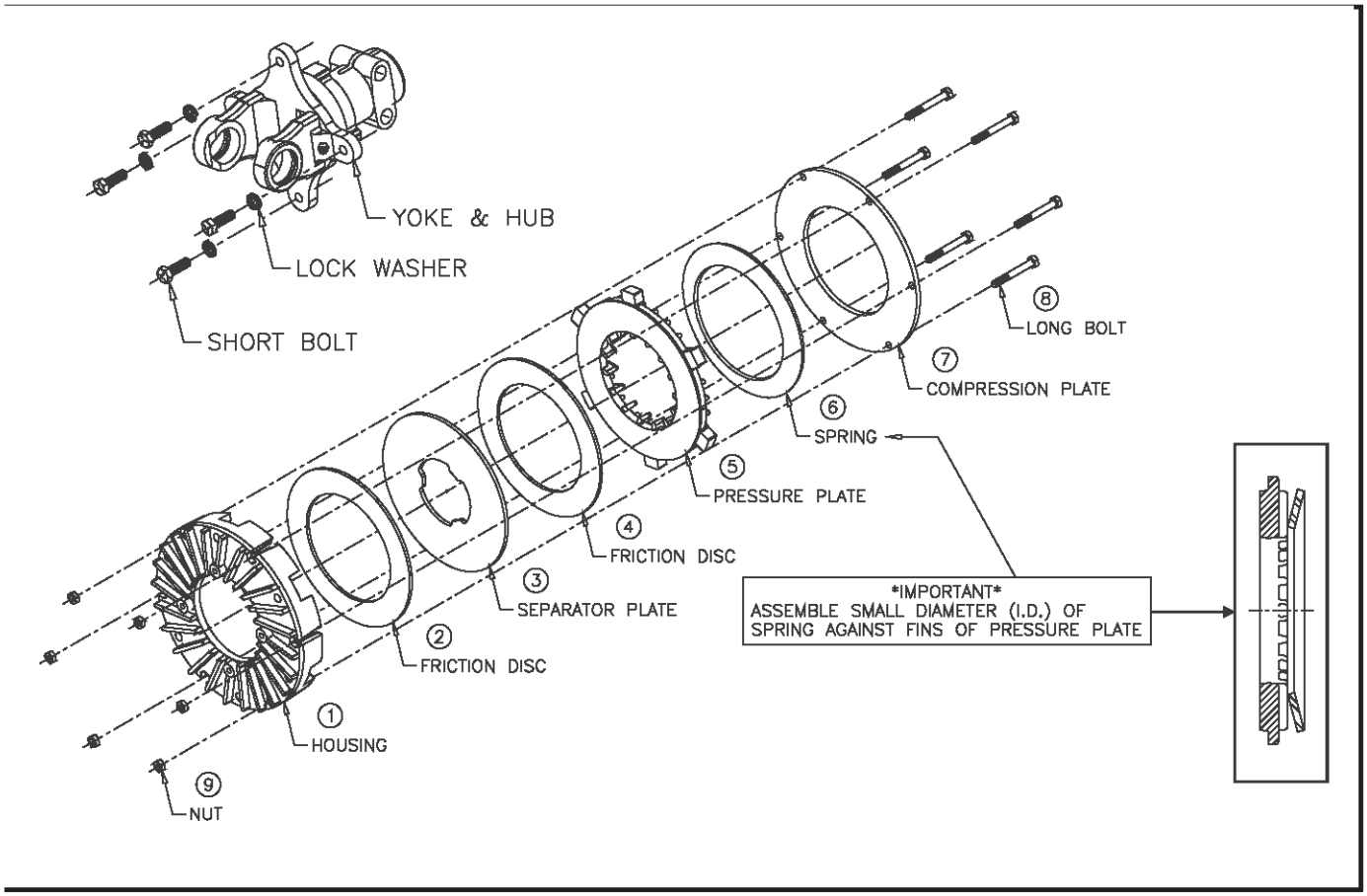

Run-In of the TORQMASTER Modular Clutch (Instructions)

If the clutch has not been operated for (1) season we recommend the following:

TOOLS REQUIRED:

(1) 1/2" box wrench or socket

1. Make sure the tractor is off and the PTO is disengaged.
2. Disconnect the driveline from the tractor.
3. Locate the bolts on the O.D. of the clutch pak. Loosen the bolts until all are finger tight, then tighten each one half a turn.
4. Attach the implement to the tractor at the hitch pin, and the driveline to the tractor PTO.
5. Turn the tractor on. Engage the PTO clutch and run for a few seconds, or until the clutch visibly smokes.
6. Disengage the tractor PTO and shut off the tractor.
7. Disconnect the driveline from the tractor.
8. Tighten the bolts on the O.D. of the clutch pak until the compression plate is in full contact with the housing.
9. If the clutch contains an integral overrunning clutch, make sure the clutch spins freely in one direction.

Degelman INDUSTRIES LTD.

WARRANTY

Degelman Industries warrants this product to the original owner for a period of one (1) year parts and labour and two (2) years parts from the date of purchase. All matters related to the warranty of our products must be handled through the authorized selling dealer.

Warranty does not cover normal wear of the machine components or damages caused by lack of maintenance or misuse, and is subject to the following provisions.

REPLACEMENT PARTS:

Will be warranted for a period of ninety (90) days.

WARRANTY ON MACHINES USED FOR CUSTOM WORK, RENTALS OR INDUSTRIAL USE:

Will be warranted as stated above, with the exception that it will be for a period of ninety (90) days only.

TIRES:

Will be adjusted for warranty by tire manufacturer.

LABOUR:

Any labour subject to warranty must be authorized by a Degelman representative before work is started. Warranty labour allowance and rates will be handled according to established warranty service policy.

GOVERNMENT LEGISLATION:

Warranty terms and conditions are subject to Provincial or State legislation.

MODIFICATIONS:

Warranty will be void if any component is altered or modified, unless written authorization is granted by Degelman Industries Limited.

WARRANTY ON ATTACHED EQUIPMENT:

No responsibility will be assumed for whatever damages may occur to persons, tractors or property.

Degelman INDUSTRIES LTD.

rock rake

RR1500

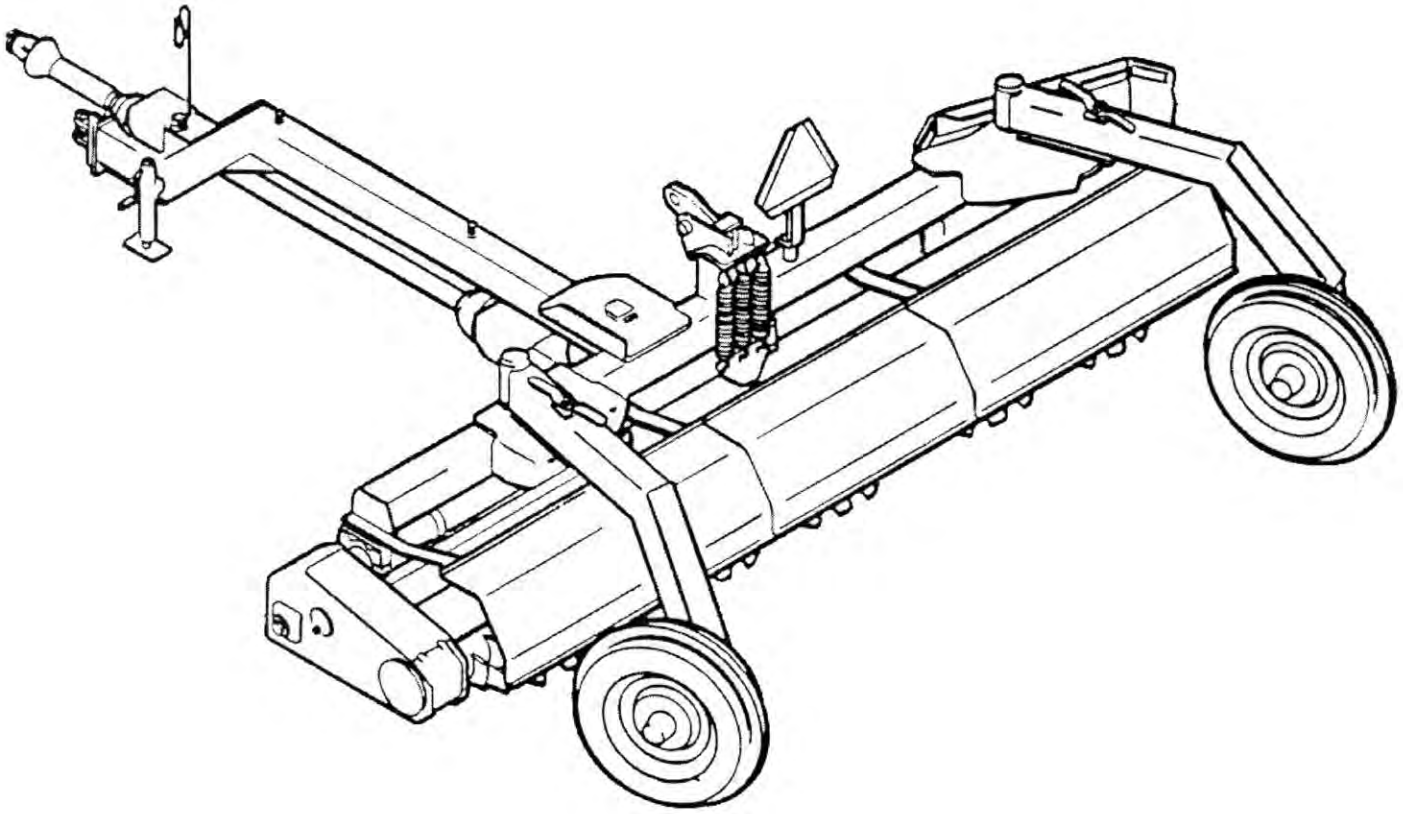

ASSEMBLY MANUAL

142351

Degelman INDUSTRIES LTD.

rock rake
RR1500



SAFETY

The safety instructions that are contained in the Operator's Manual pertain only to this specific equipment. You should be aware of agricultural & industrial safety especially related to heavy equipment. If you are not familiar with safety procedures then you should get training.
Improper use will result in maiming or death.

272 Industrial Drive, Box 830
Regina, Sask. Canada S4P 3B1
306 543-4447 543-2140 fx

degelman@degelman.com

www.degelman.com

ASSEMBLY

Tighten bolts to torque values shown at the various steps indicated.

Bolt Dia. (in.)	Bolt Torques (ft. lbs.) Grade 5		Grade 8	
	UNC	UNF	UNC	UNF
5/16	13	14	18	20
3/8	23	25	35	38
1/2	55	65	80	90
9/16	80	90	110	130
5/8	110	130	170	180
3/4	200	220	280	320
1	480	530	680	740

*Torques are for PLATED or LUBRICATED threads.

1. Dismantle main unit bundle and open crate.

Layout spiral drum and rockshaft in a similar manner as shown.

CAUTION: Be sure no one is standing near while positioning the various components.

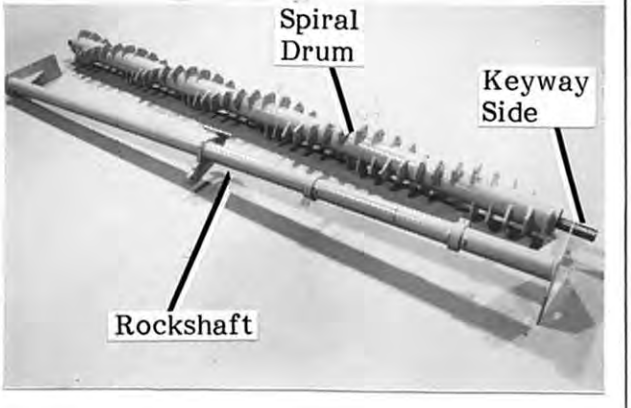

Position chain housing and rockshaft end plate as shown.

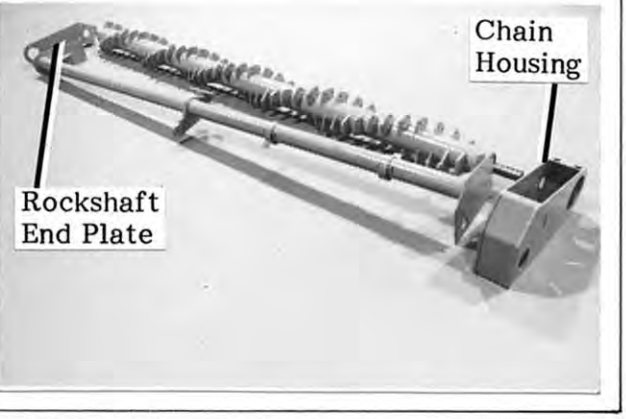

2. Secure heavy duty 2 7/16 in. flange bearing unit to the inside wall of chain housing using the four bolts, lockwashers and nuts shown. (Note the direction of grease fitting.)

NOTE: It is recommended to apply silicon sealer (supplied) to bearing flange surface before installing components.



3. Slide bearing unit/chain housing combination onto spiral drum shaft (keyway side) until the 3/4 in. (20mm) gap shown is obtained.

Install lock collar onto flange bearing. Use a hammer and drift punch to tighten securely (clockwise).

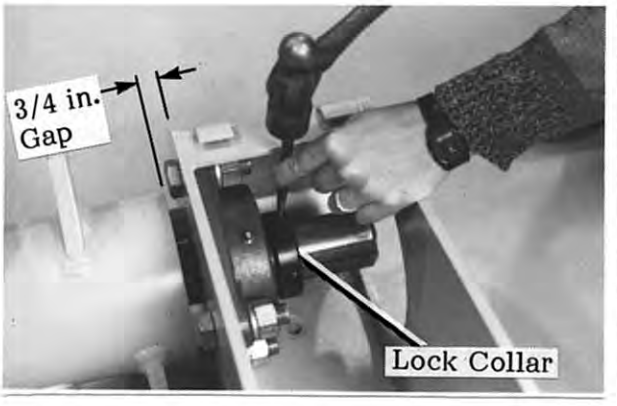

Secure lock collar by tightening setscrew.

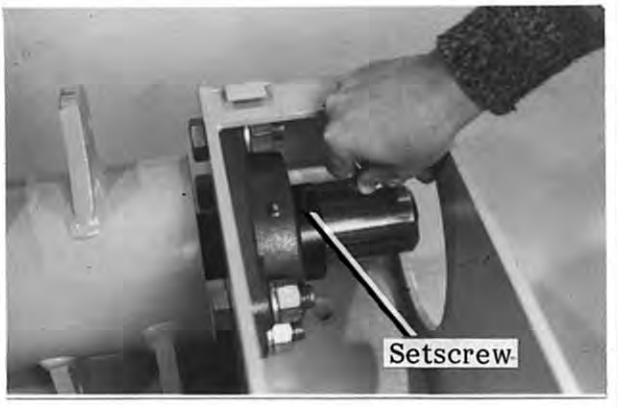

4. Secure rockshaft to chain housing using flange bearing along with bolts, lockwasher and nuts shown. (Note direction of grease fitting and front two bolts on bearing.) Store lock collar away for later assembly.

NOTE: It is recommended to apply silicon sealer (supplied) to bearing flange and around bolt holes on inside of chain housing before installing components.

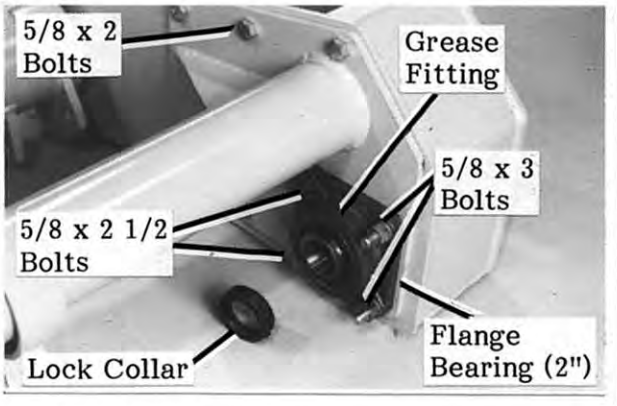

5. Combine the rockshaft, rockshaft end plate and spiral drum using the flange bearing along with bolts, lockwashers and nuts shown. (Note direction of grease fitting.)

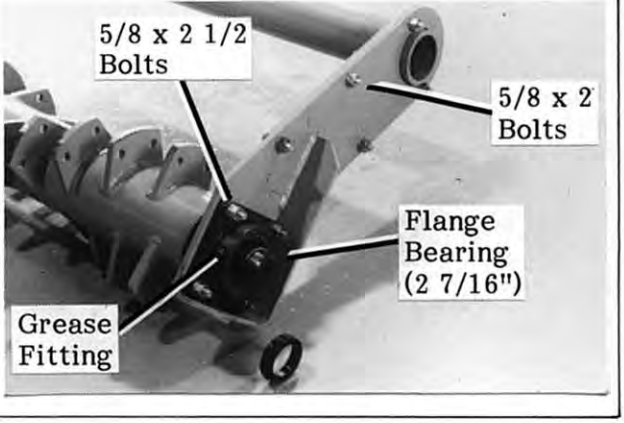

6. Pry and hold apart the rockshaft end plate and spiral drum to the gap shown.

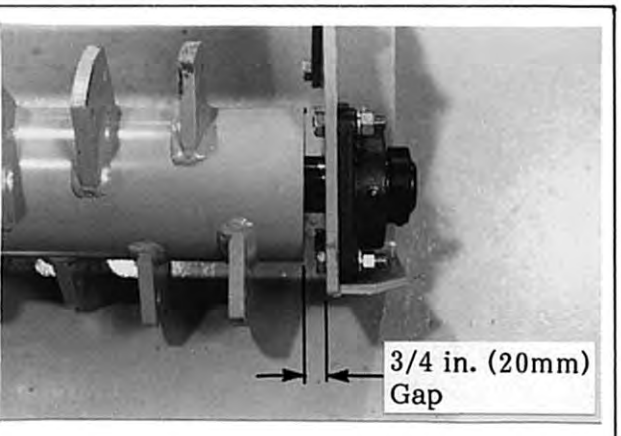

Install lock collar onto flange bearing. Use a hammer and drift punch to tighten securely (counter-clockwise).

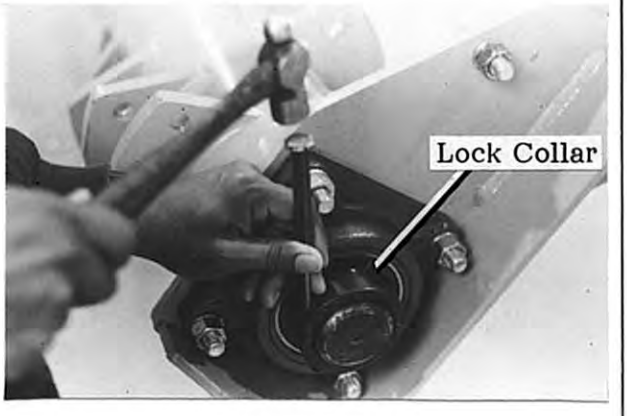

Secure lock collar by tightening setscrew.

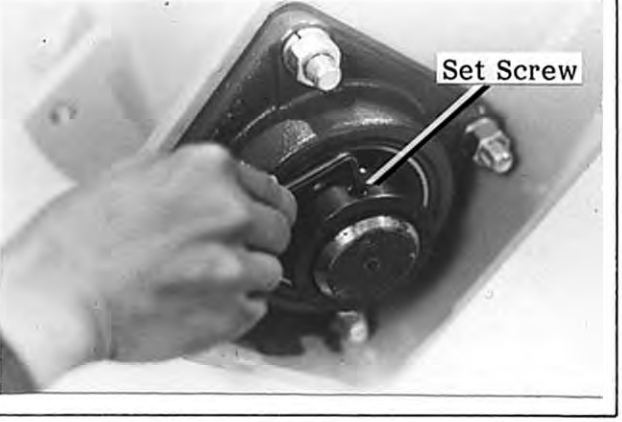

7. Tighten bolted connections assembled to this stage to torque values shown on Torque Chart on Page #1.

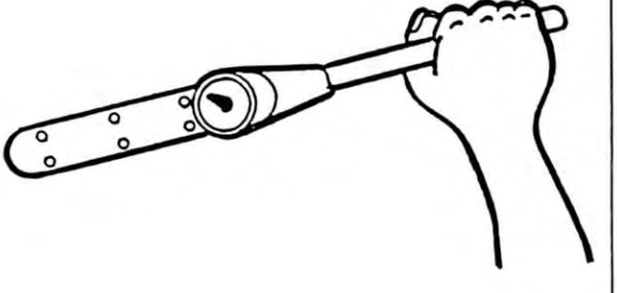

8. Construct a similar support stand structure as illustrated, over the rockshaft/drum sub assembly.



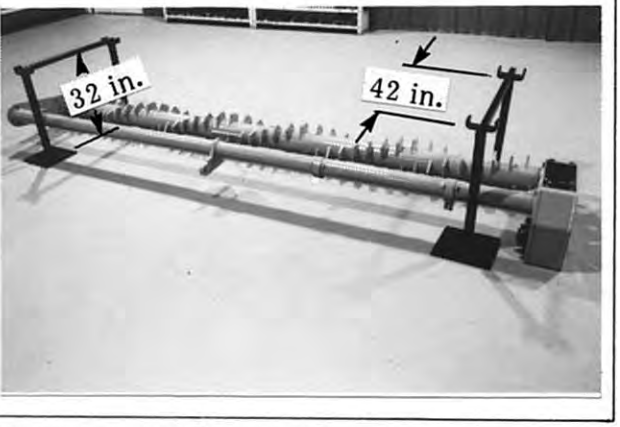

9. Lay main frame upon support stands and adjust over to align centre lug on rockshaft to clevis plates on main frame.

⚠ **CAUTION:** Be sure no one is standing near while positioning components and check that stands are secure before proceeding.

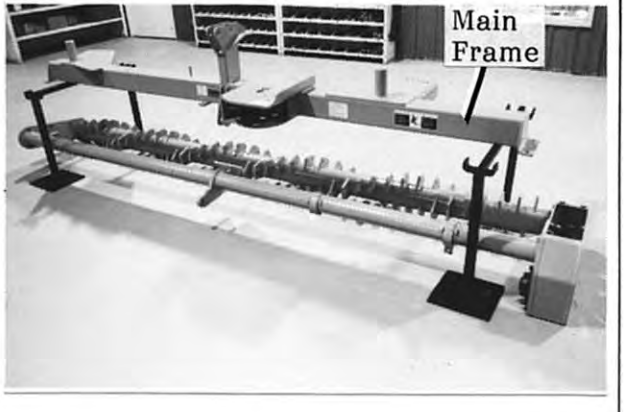

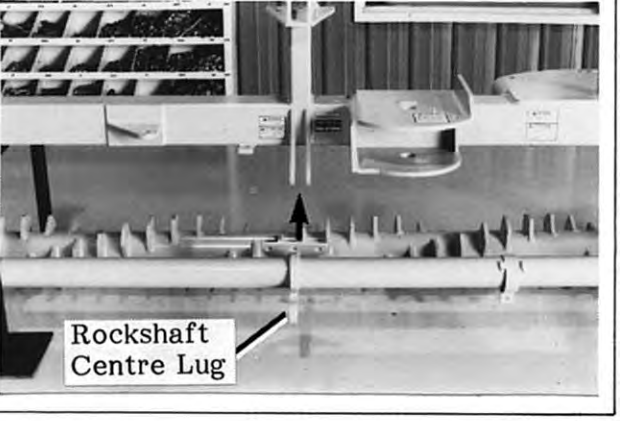

10. Install side wind jack to hitch pole and secure with chained pin.

Position hitch pole between main frame plates, aligning holes.

CAUTION: Be sure no one is standing near while positioning components.

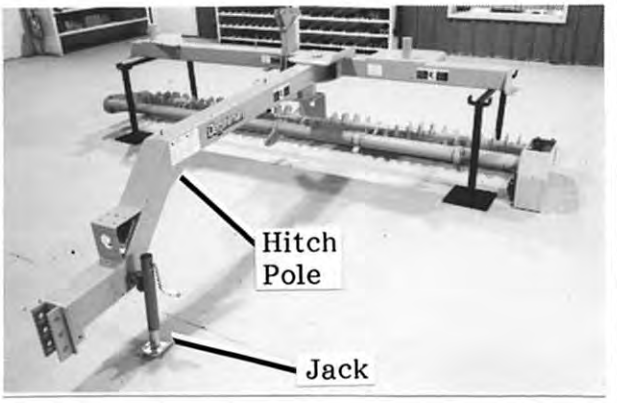

Drop the pin assembly into position.

NOTE: Clean out the threaded hole in pin assembly using a 5/8 in. UNC tap.

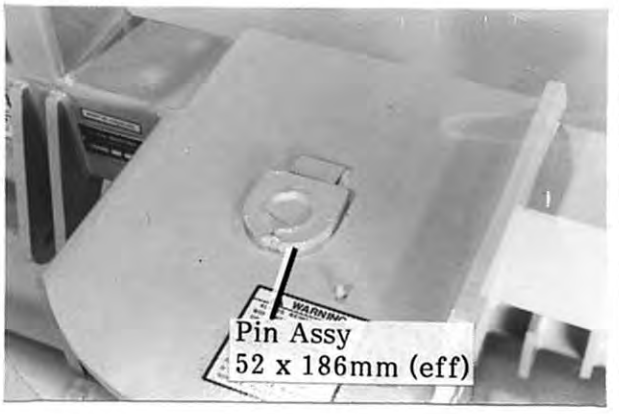

Secure pin assembly using the flatwasher, lockwasher and bolt shown.

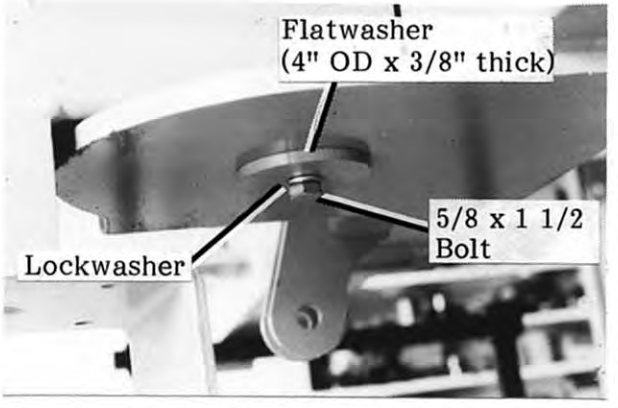

11. Install the safety stop bolt and high hex nut (fine thread) as shown into main frame plate.

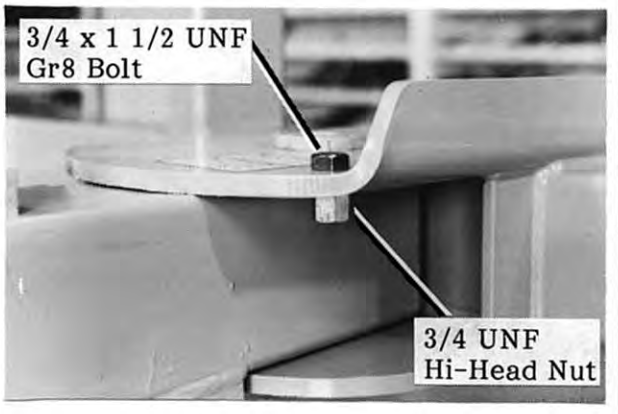

12. Level hitch pole to ground level by adjusting side wind jack.

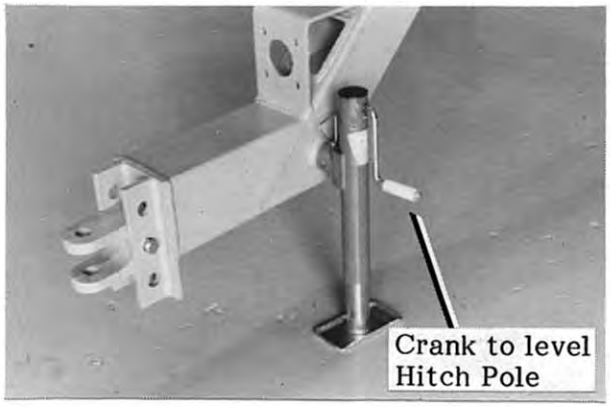

13. Drop both wheel legs into position over stubs on main frame.

NOTE: Clean out the threaded hole in each stub using a 5/8 in. UNC tap.

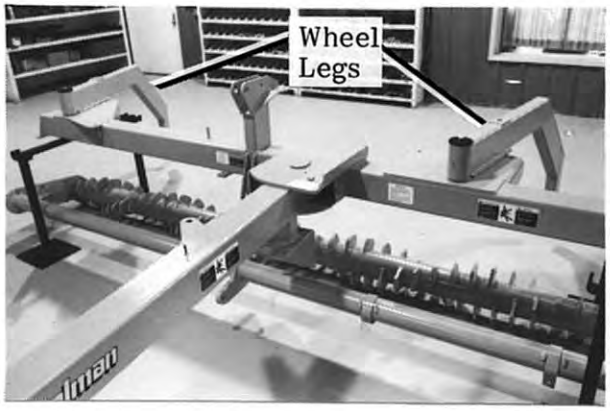

Secure wheel legs using the flatwasher, lockwasher and bolt shown.

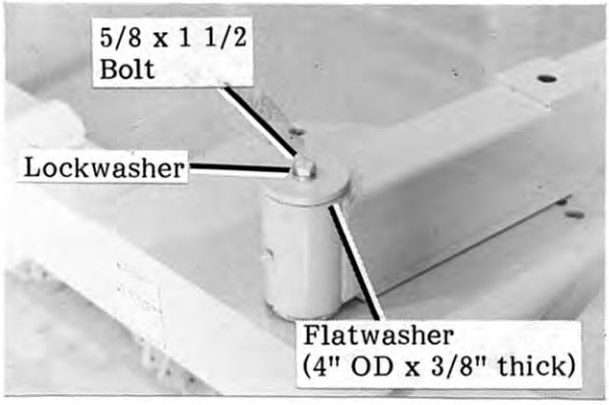

14. Swing both wheel legs over to align the hole with the centre setting on pivot plate.

Insert the bolt/clip assembly from bottom side and secure with the wing nut assembly.

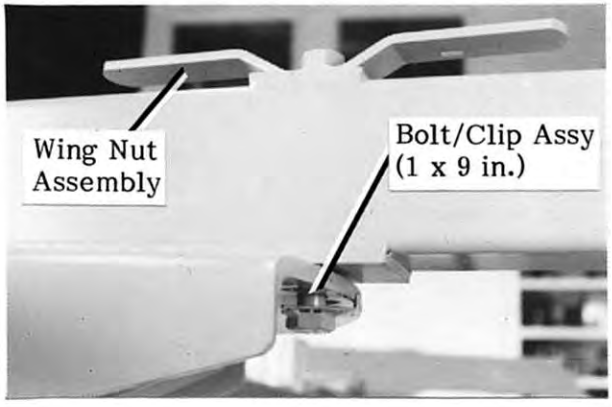

15. Mount the hub/spindle assembly (angled) to the left hand wheel leg as illustrated using the four hole bolt plate along with the four bolts, lockwashers and nuts shown.

NOTE: Clean out threaded holes in casting using a 9/16 in UNF tap.

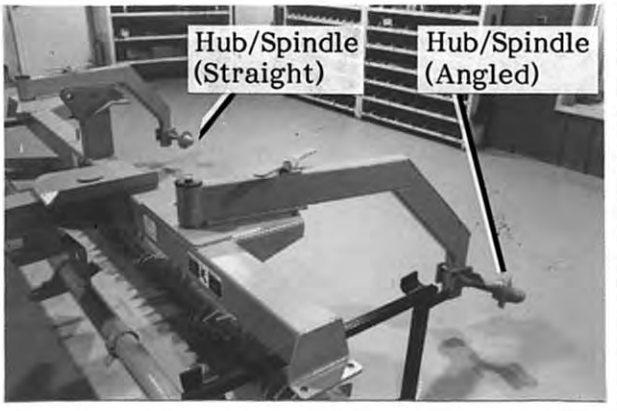

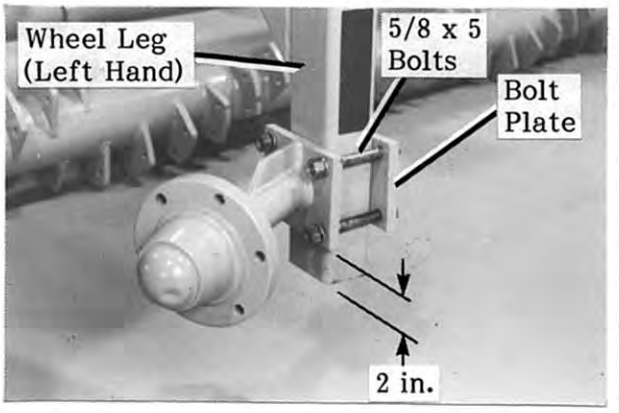

16. Mount the hub/spindle assembly (straight) to the right hand wheel leg as illustrated, similar to Step #15.

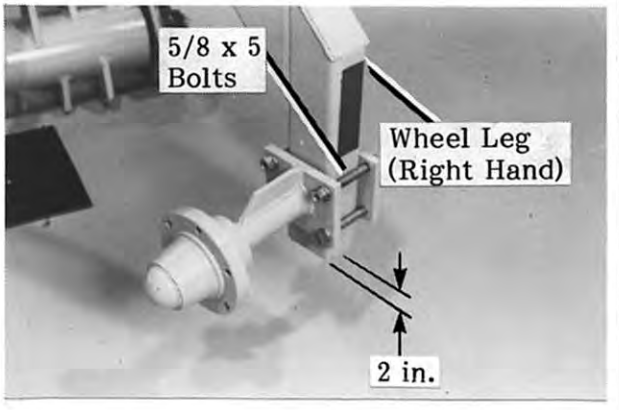

17. Mount a wheel assembly to each hub using the six wheel bolts shown. Torque bolts to 90 ft. lbs.

Inflate tires to 32 PSI (220 kPa).

WARNING: Do not exceed recommended tire pressure. Use care and caution when inflating tires to prevent personal injury from blow-outs.



18. Tighten bolted connections assembled to this stage to torque values shown on Bolt Torque Chart on Page #1.

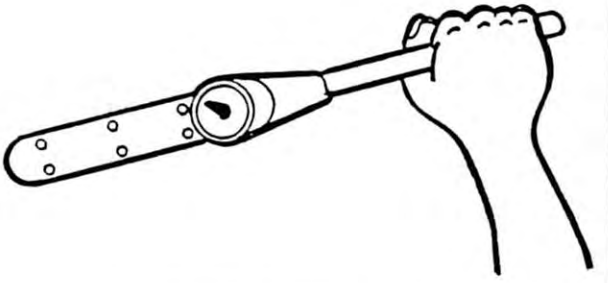

19. Remove support stands.

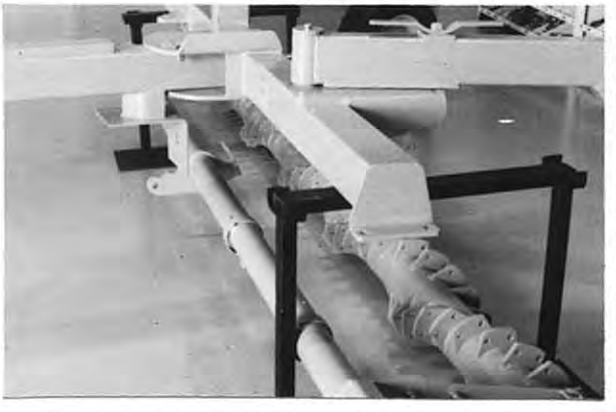

20. Position the base bearing casting on rockshaft pipe and make ready the cap bearing casting along with two shims (slotted) as illustrated.

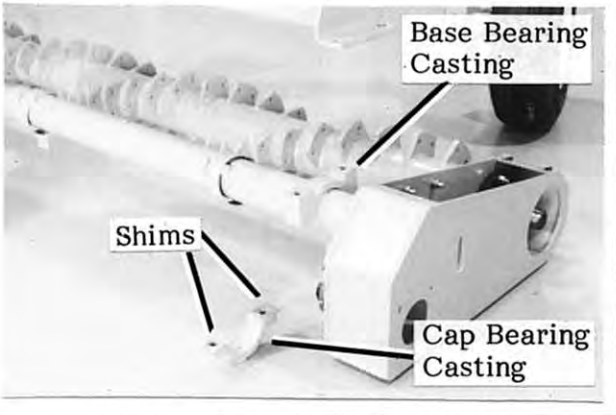

21. Repeat similarly at the other two locations shown.

Raise up rockshaft carefully toward main frame beam.

CAUTION: Be sure no one is standing near while raising unit.

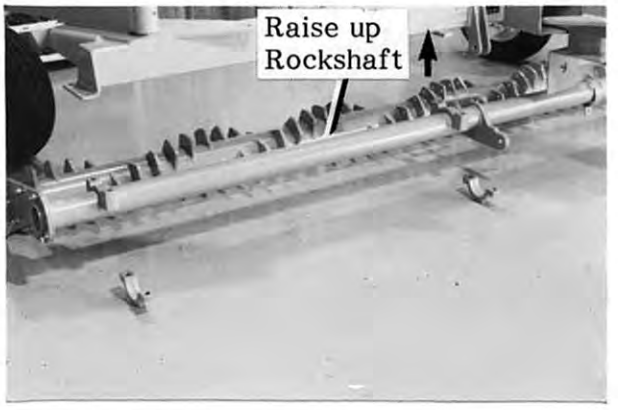

22. Mate and secure the centre castings first using the two bolts and lockwashers shown.

NOTE: Clean out both threaded holes in bolt bar using a 3/4 in. UNC tap.

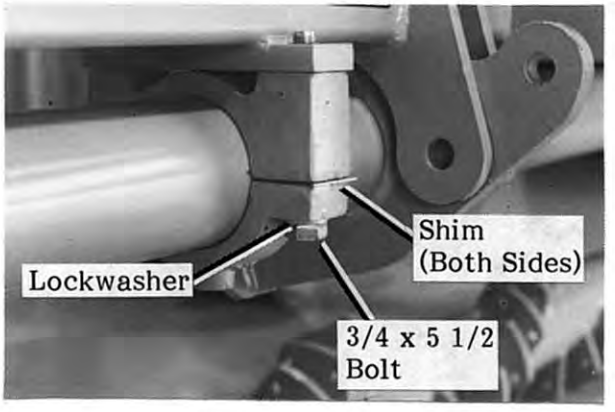

Mate and secure the left hand castings next along with the shield support bracket (slotted) using the two bolts, flatwashers, lockwashers and nuts shown.

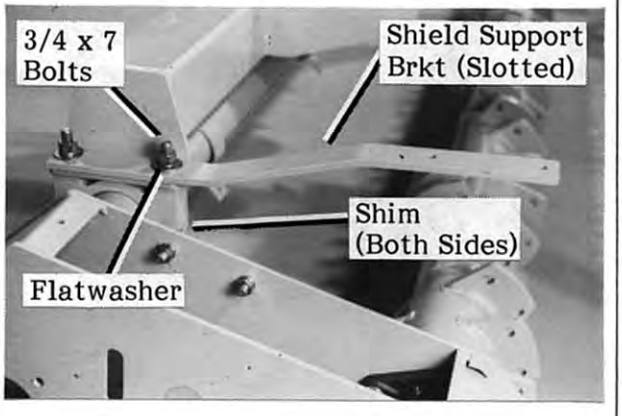

Mate and secure the right hand castings last along with the remaining shield support bracket (slotted) and stone guard bracket using the two bolts, lockwashers and nuts shown.

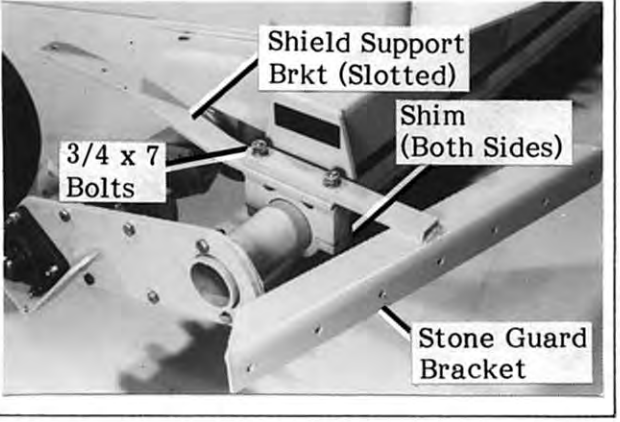

23. Raise spiral drum to allow installation of a transport pin (25.4 dia. x 95mm effective).

Secure transport pin with hair pin shown.

CAUTION: Be sure no one is standing near while raising unit.

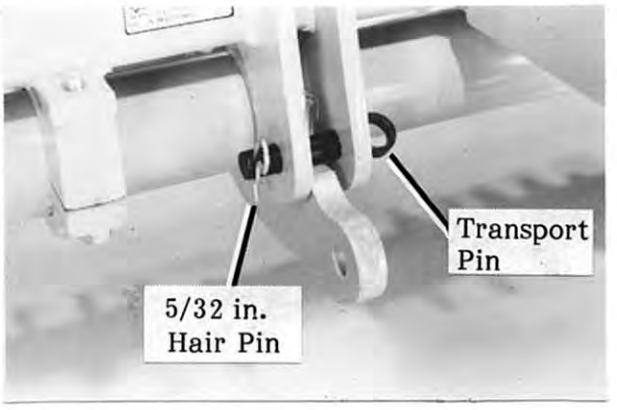

24. Remove and discard plastic plug from top of gear box and add 1 1/2 litres of SAE 85W90 gear oil.

Install the threaded reducer bushing and vented plug combination into hole.

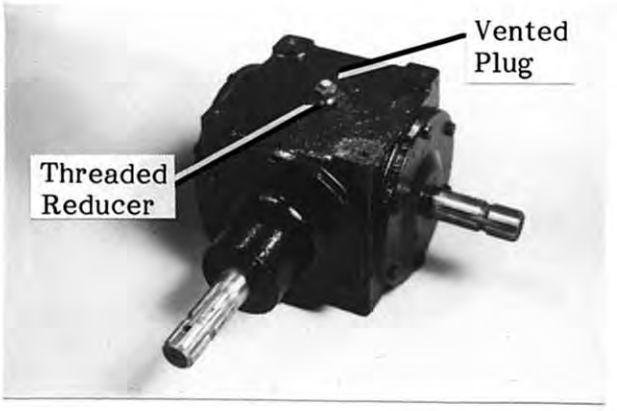

Mount the gear box to hitch pole in direction shown using the four bolts and lockwashers.

NOTE: Remove protective coating from shafts using a solvent and touch up surfaces with a smooth file.

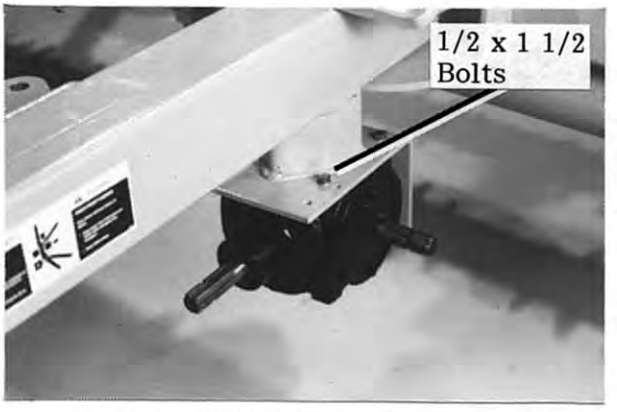

25. Remove protective coating from splines and shaft of drive shaft/torque limiter unit using a solvent and touch up surfaces with a smooth file.

Slide unit onto gear box shaft ensuring a smooth sliding fit by coating surfaces with oil.

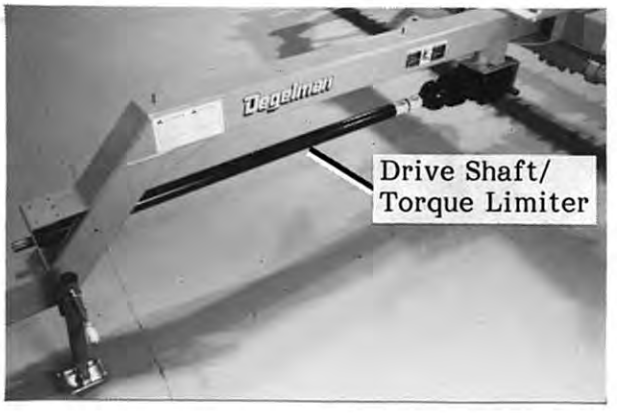

26. Mount the flanged bearing unit over shaft and secure to hitch pole using the four bolts, lockwashers and nuts shown. (Note direction of grease fitting.)

Important: Lock collar is shipped with bearing but is **not** required.

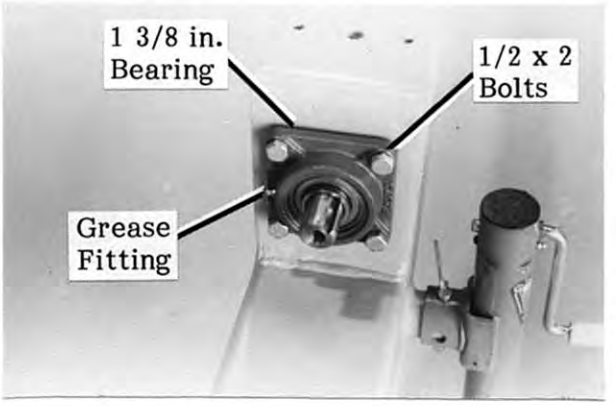

27. Obtain the key shown from the specially packaged plastic bag and locate into shaft keyway.

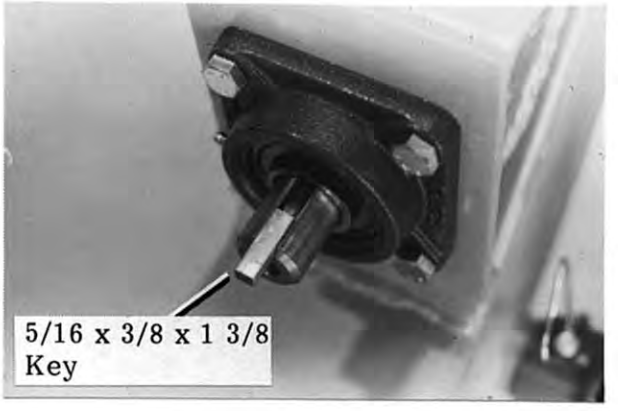

Install the slider shaft shown onto keyed shaft.

NOTE: Clean out inside of yoke and touch up with a fine file to ensure a smooth sliding fit.

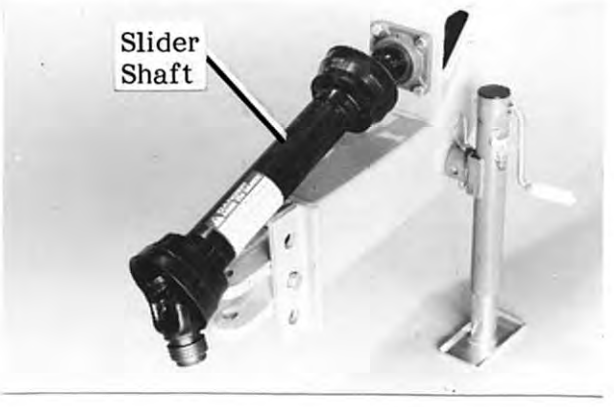

Secure with the washer and bolt (drilled head) shown. Tighten bolt fully.

NOTE: Grease fitting can be removed to ease assembly of bolt.



Pass the tie wire through hole in bolt head and twist wire around yoke as shown.

Replace grease fitting if previously removed.

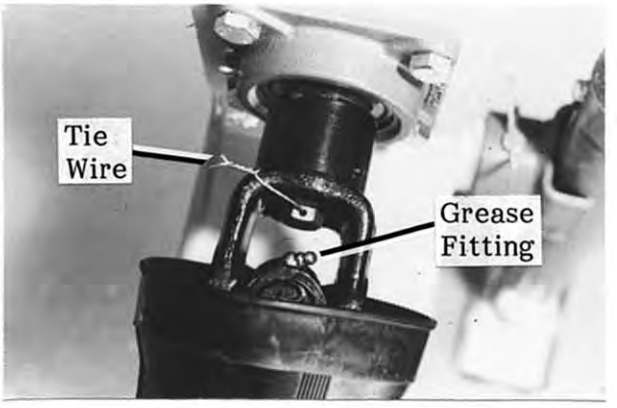

28. Slide the input shaft/sprocket assembly through chain housing and bearing unit.

NOTE: For municipal option machines, refer to separate instruction enclosed in special kit.

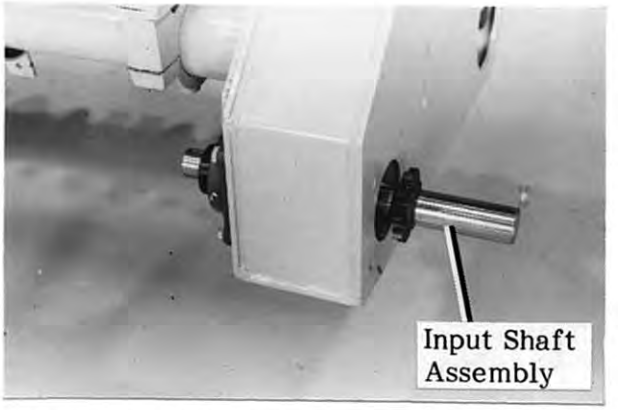

29. Mount the flanged bearing unit into place and secure with the four bolts, lockwashers and nuts shown. (Note direction of grease fitting.)

NOTE: It is recommended to apply silicon sealer (supplied) to bearing flange and around bolt holes on inside of chain housing before installing components.

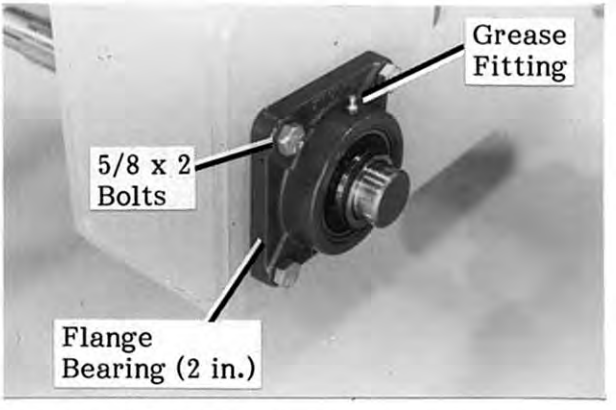

30. Position the input shaft sprocket at the distance shown from the inside of chain housing.

Position lock collar onto end of shaft.

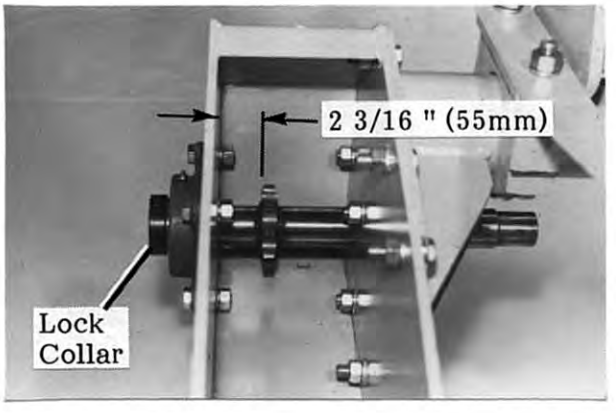

Secure this setting of input shaft by tightening the lock collar (clockwise).



Secure lock collar by tightening setscrew.



31. Tighten the other bearing lock collar (counter-clockwise) and secure collar by tightening setscrew.

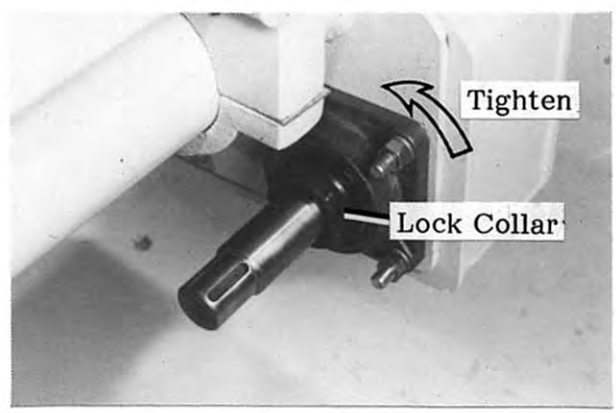

32. Insert key shown into shaft keyway.

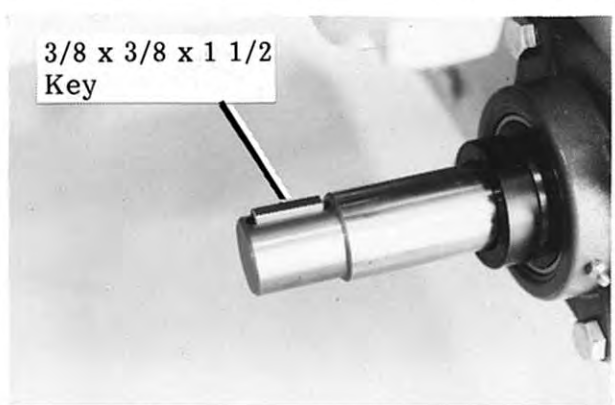

33. Install the slider shaft unit onto shaft locations shown.

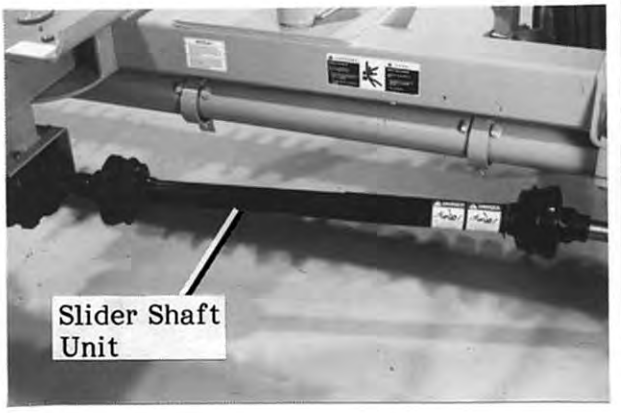

Slide the yoke of the slider shaft unit up to the shoulder of the input shaft. Secure this setting by tightening both setscrews.

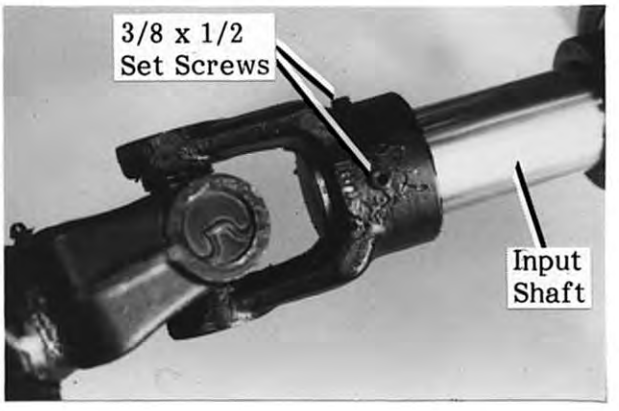

Attach the opposite end of slider shaft unit to ensure full engagement of the quick disconnect yoke.



34. Subassemble the components shown to produce the idler sprocket unit.

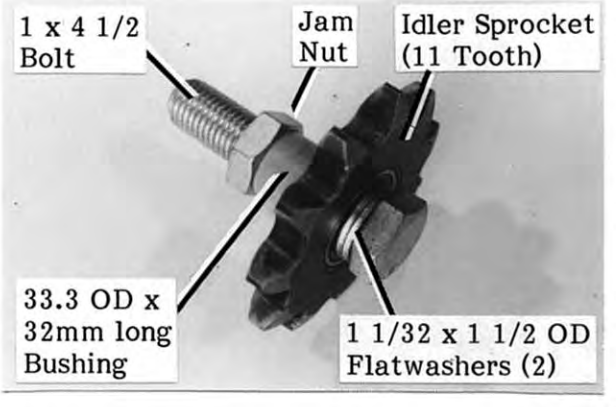

35. Locate idler sprocket unit and heavy flatwasher on inside of chain housing.

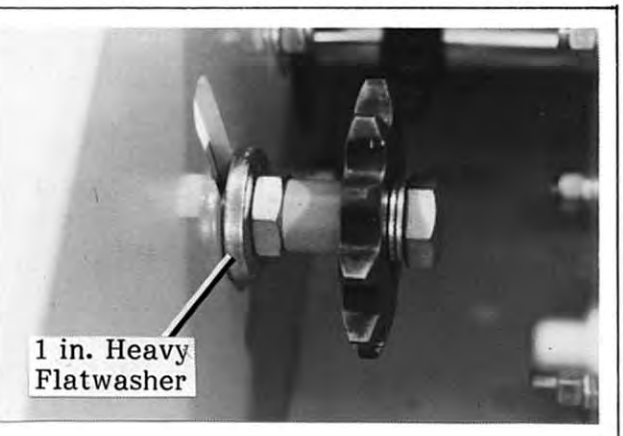

Loosely secure protruding end of bolt using the idler sprocket cover plate and jam nut.

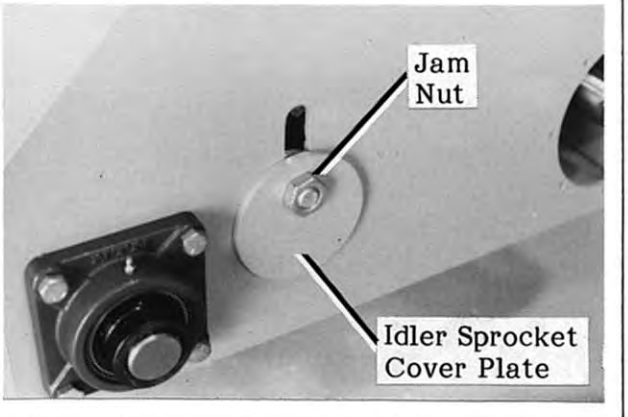

36. Remove the stepped key from the split taper bushing kit and position in keyway.

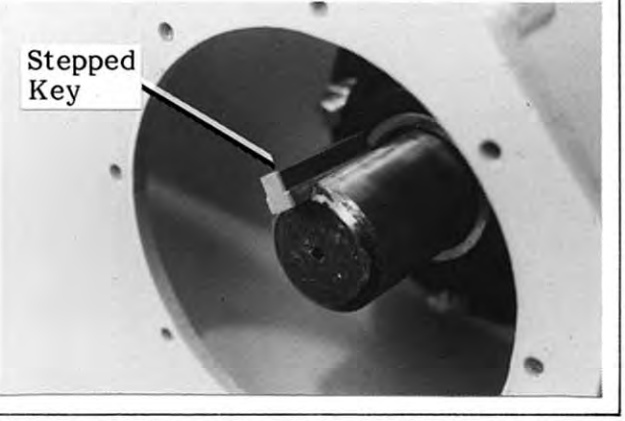

37. Slide the tapered bore sprocket over shaft and key.

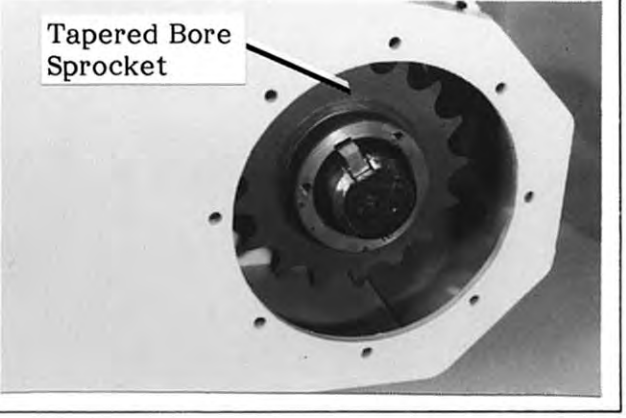

38. Locate the tapered bore sprocket away from the inside of the chain housing at the dimension shown and wedge the split taper bushing over shaft and into sprocket bore.

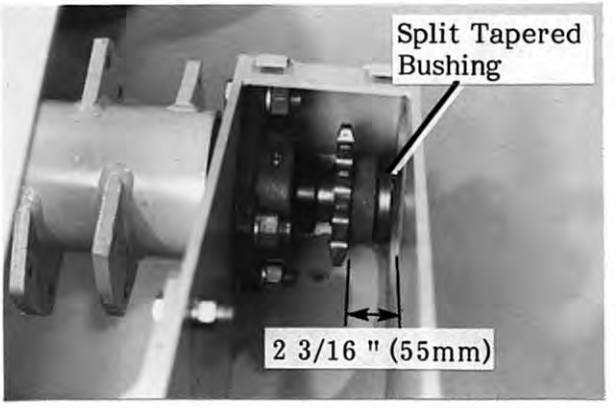

Install and tighten the three bolts provided to secure the tapered bore sprocket to shaft.

NOTE: Check to ensure that the 2 3/16 in. (55mm) dimension has been maintained when bolts are fully tightened. Loosen and repeat if necessary.

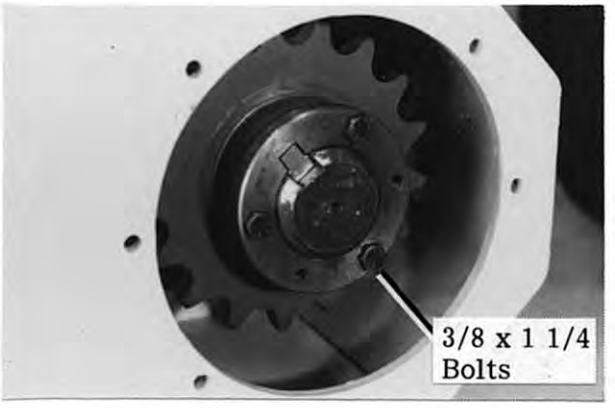

39. Wrap chain around sprockets and join ends using chain components illustrated.

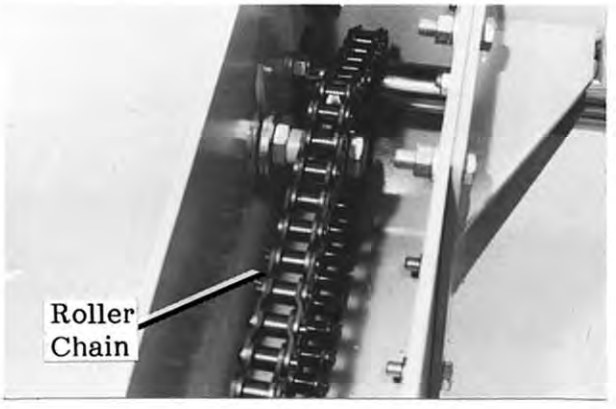

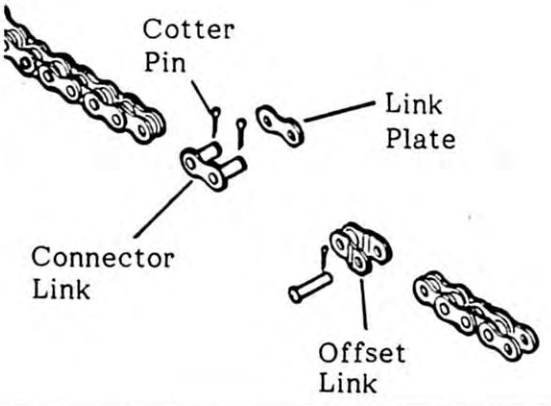

40. Raise the idler sprocket to tighten chain to provide approximately 1/2 in. (12mm) of slack.

Rotate idler sprocket cover plate to fully close off slot, then tighten jam nut.

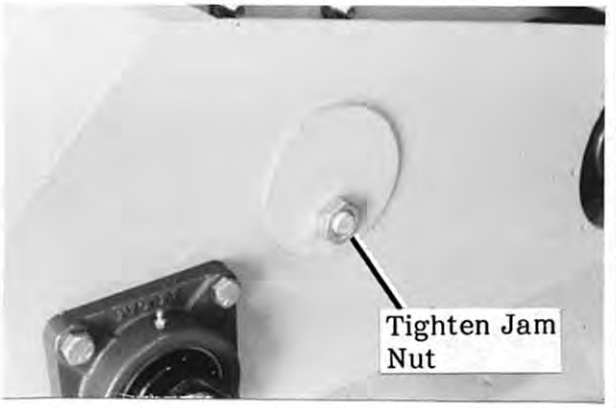

41. Secure the chain housing cover plate to chain housing using the eight self-tapping bolts.

NOTE: It is recommended to apply silicon sealer (supplied) under cover plate and around bolt holes before installing.

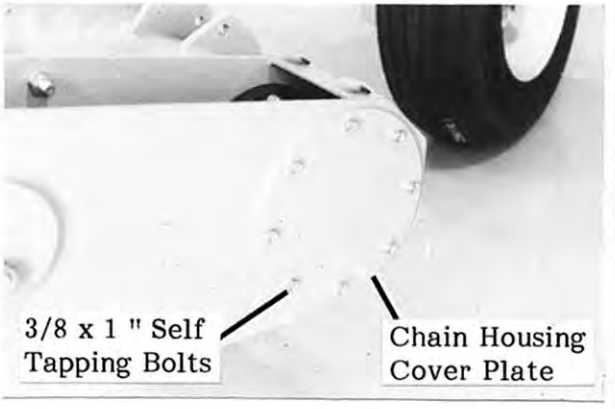

42. Position the chain housing lid under the two tabs of chain housing.

Thread in thumb screw and flatwasher to secure lid.

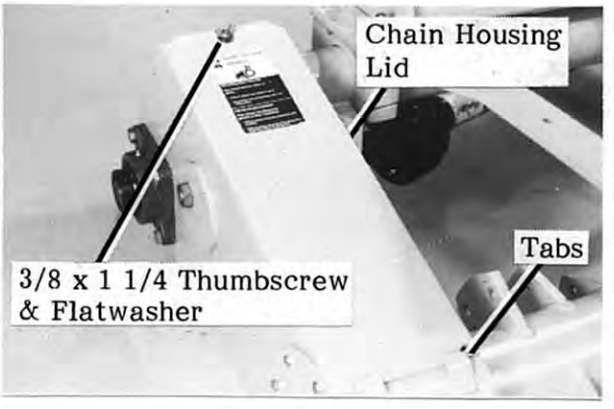

43. Tighten bolted connections assembled to this stage to torque values shown on Bolt Torque Chart on Page #1.

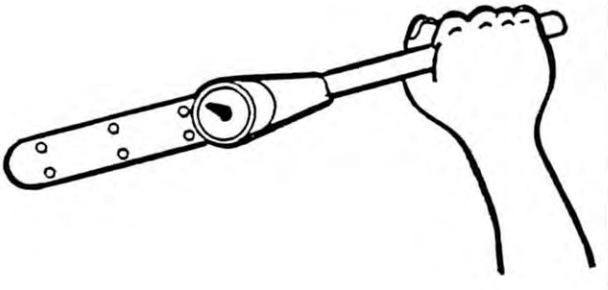

44. Assemble the hydraulic floating arm, pin and two roll pins between clevis plates.

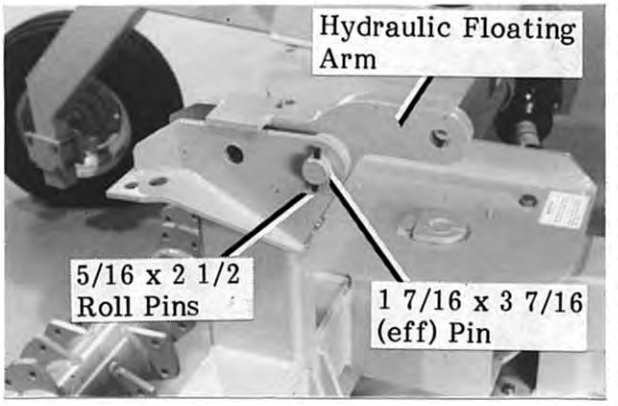

45. Raise spiral drum to allow installation of the three springs, eyebolts and locknuts.

Tighten locknuts until approximately two threads of eyebolts protrude.

CAUTION: Be sure no one is standing near when raising unit.

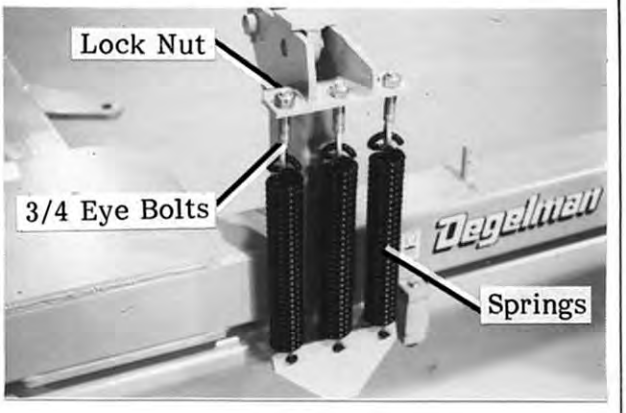

Locate floating arm lock pin (25.4 dia. x 95mm effective) in storage hole.

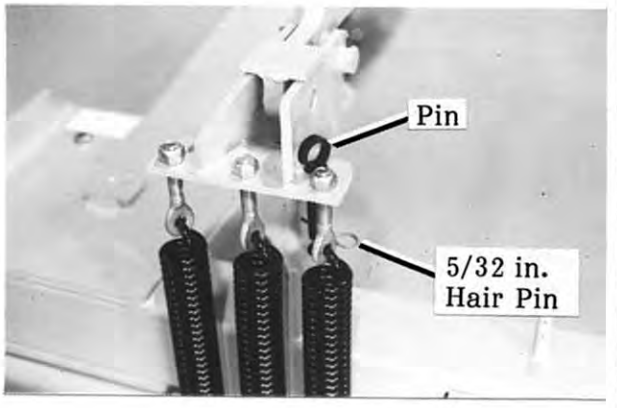

46. Assemble teeth to spiral drum using the special 5/8 x 1 3/4 in. Gr8 bolts and locknuts.

NOTE: Be sure to locate teeth on right hand side of drum plates.

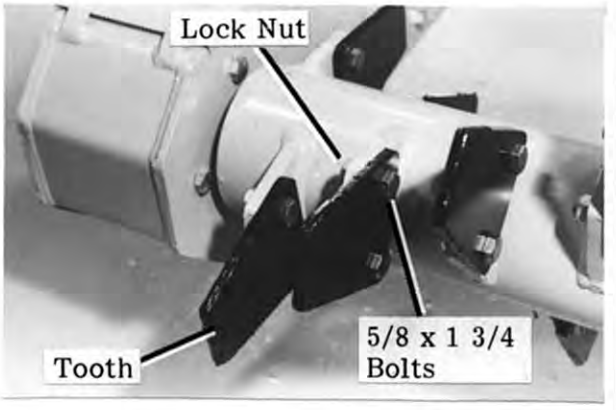

Torque these bolts to 170 ft. lbs.

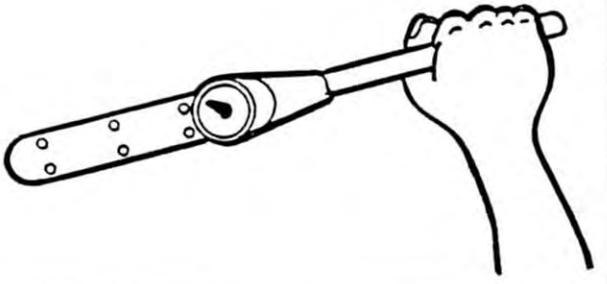

47. Subassemble the two flap straps on each side of rock guard flap (9 x 57 in.) along with the four bolts, lock-washers and nuts at locations shown.

NOTE: Leave the 2nd hole from each side open.

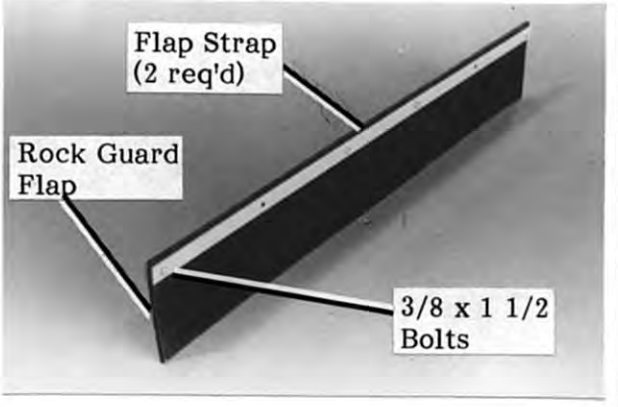

Attach rock guard unit to collars of rock shaft and secure with bolts, lock-washers and nuts in the two remaining open holes.

NOTE: Be sure to install the drive shaft support bracket at this time, at location shown.

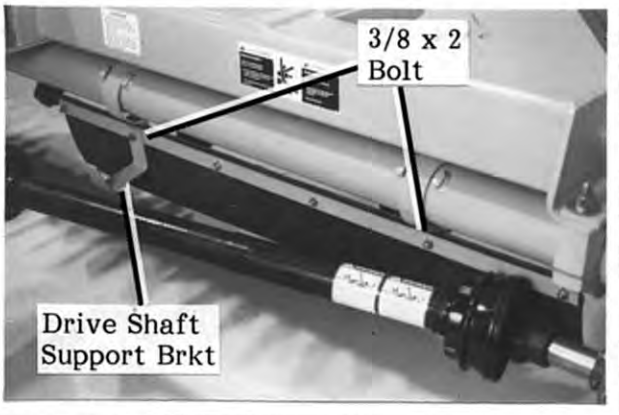

48. Position the rock guard flap against the stone guard bracket and secure with the bent bolt bar, two short bolt bars along with the bolts, lockwashers and nuts shown.

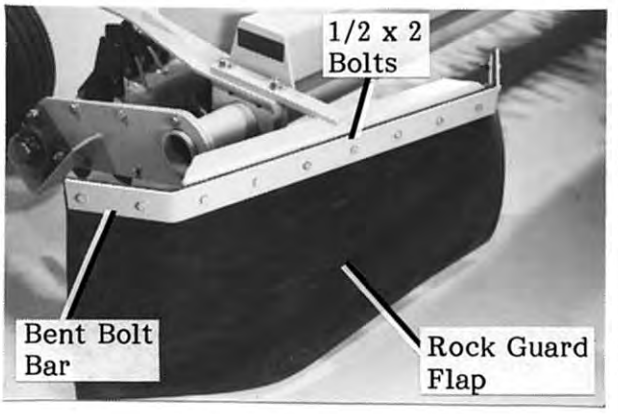



49. Secure the front PTO shield to hitch pole using the two bolts, flatwashers, lockwashers and nuts shown.

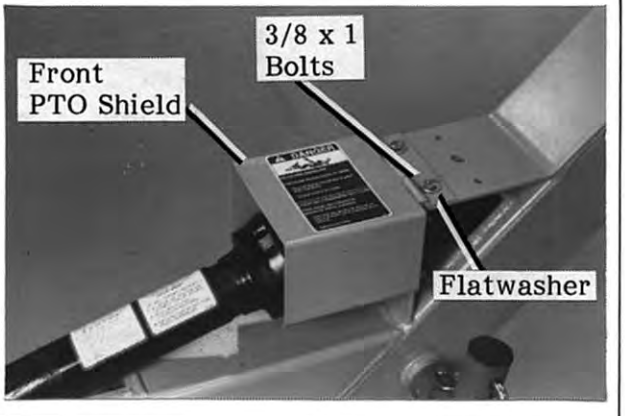

50. Secure the flexible hose holder to hitch pole using the bolt, flatwasher, lockwasher and nut indicated.

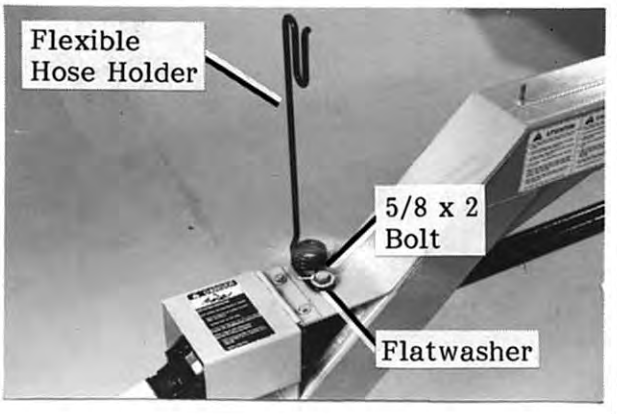

51. Remove the rear bolt holding gear box to pole and secure the support bar clip over this hole by reinstalling bolt.

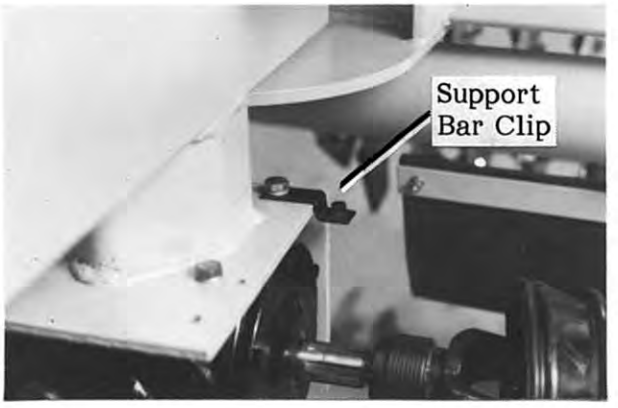

Install the folding gear box shield and back-up clip, securing with two bolts, flatwashers, lockwashers and nuts shown.

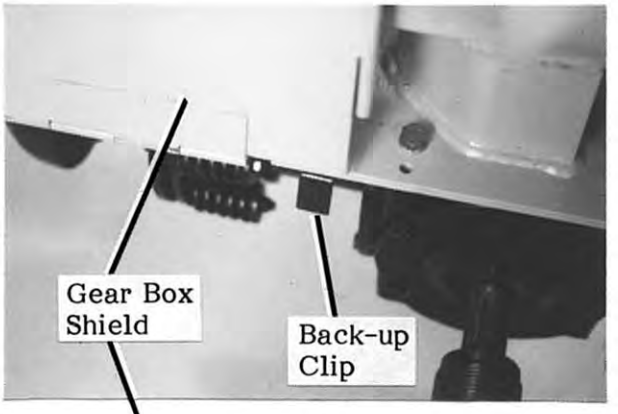

Fold the shield back and up over the pin on the support bar clip and secure with hair pin shown.



52. Install the chain case input shaft shield over the bolt threads protruding from the flange bearing. Secure shield with the two jam nuts shown.

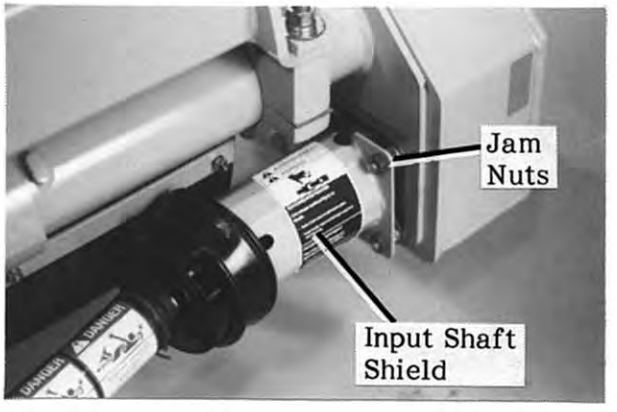

53. Mount the two remaining shield support brackets along beam at the approximate locations shown. Secure loosely using bolt bars (2 hole - 6 5/8 in. centres), bolts, lockwashers and nuts shown.

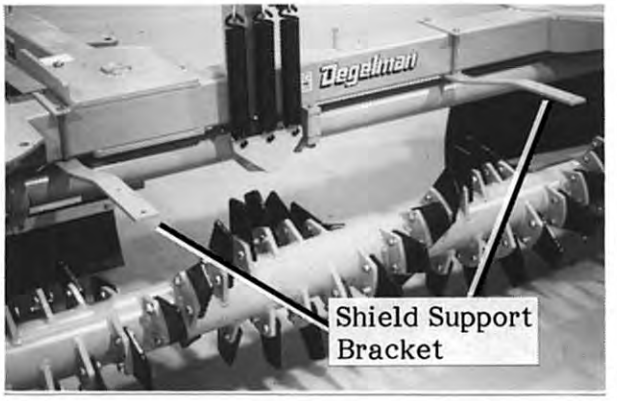

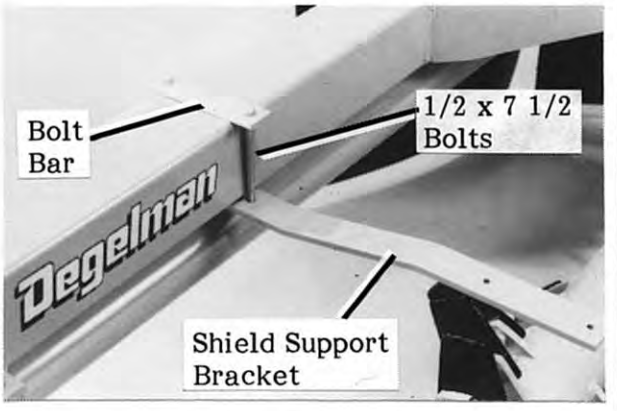

54. Start at the left hand side of machine and loosely assemble one of the three drum shields to the first two shield support brackets using bolts, lockwashers and nuts at hole locations shown.

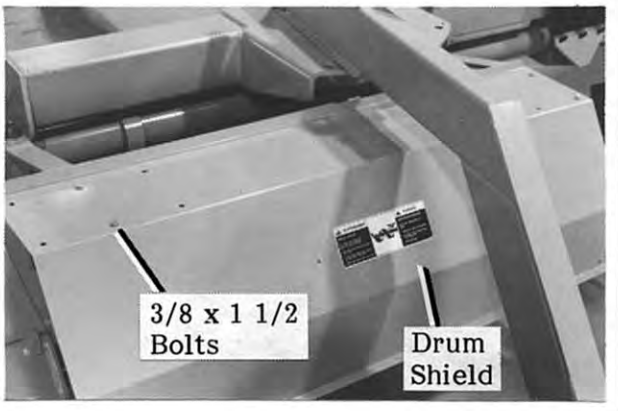

Align opposite end of drum shield to support bracket and insert the bolts only at this time.

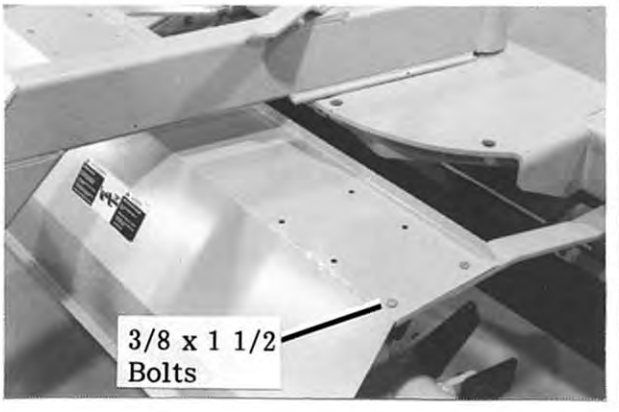

55. Slide a second drum shield under the first and align holes shown.

Secure shields with lockwashers and nuts.

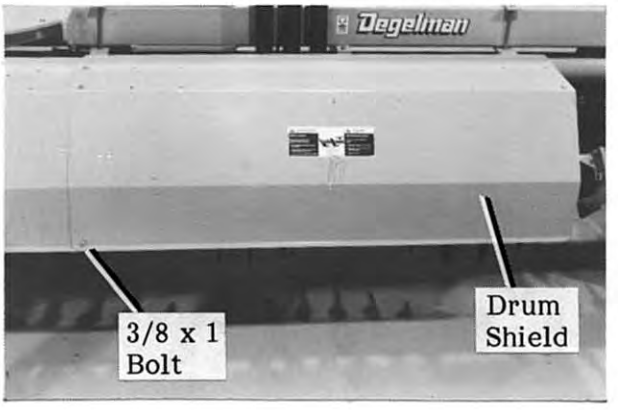

Align opposite end of drum shields to the support bracket by inserting the bolts only at this time.

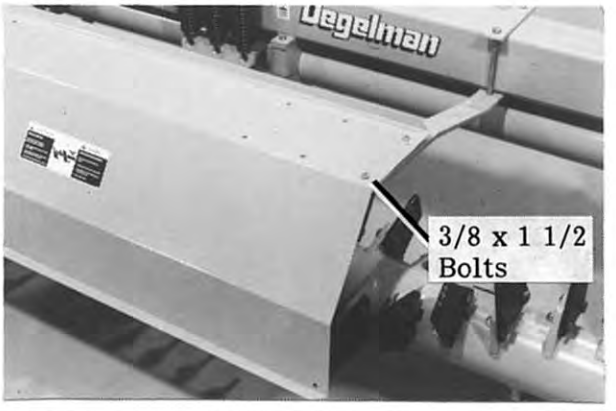

56. Slide the third drum shield under the second, aligning holes shown.

Secure shields with lockwashers and nuts shown.

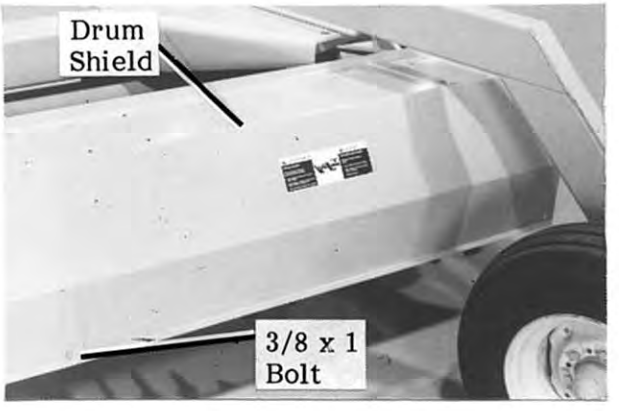

Secure the opposite end to support bracket.

Tighten all shield hardware left loose.

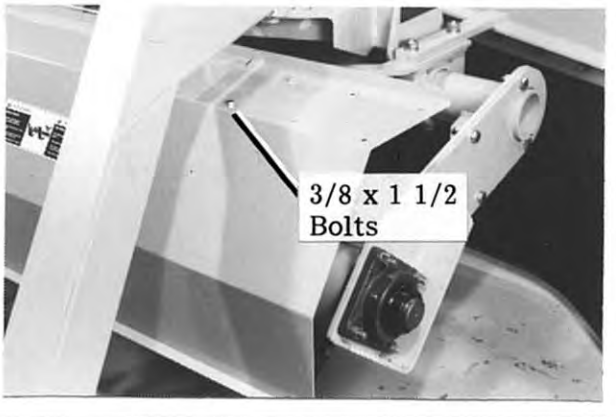

57. Mount the SMV sign to bracket using the two bolts, lockwashers and nuts shown.

Position the unit over the stud welded to frame and secure with hair pin shown.

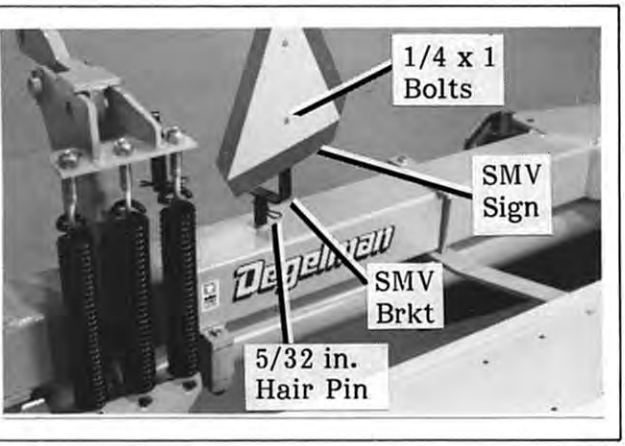

58. The Rock Rake is structurally complete and ready for installation of the optionally purchased hydraulics. If the customer is supplying the necessary hydraulics, follow steps as a guide line to help establish the necessary requirements of cylinders, hoses (2 wire braid) and fittings.

59. Connect the two 3 x 8 in. hydraulic cylinders as shown and install the appropriate fittings.

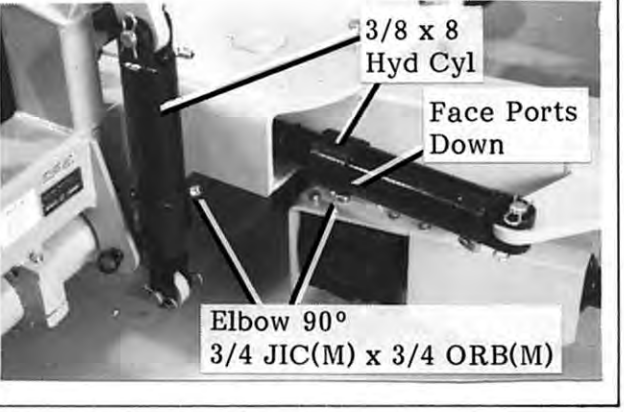

60. Connect appropriate length of hoses to hydraulic cylinders and route along hitch pole.

Secure hoses to pole using the two hose clips, lockwashers and nuts shown.

Also use the plastic hose ties as shown.

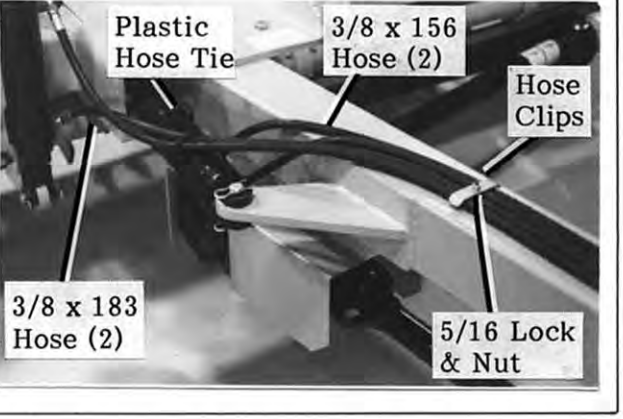

61. Press hoses into flexible hose holder.

Install the four remaining nipple fittings into the end of hoses.

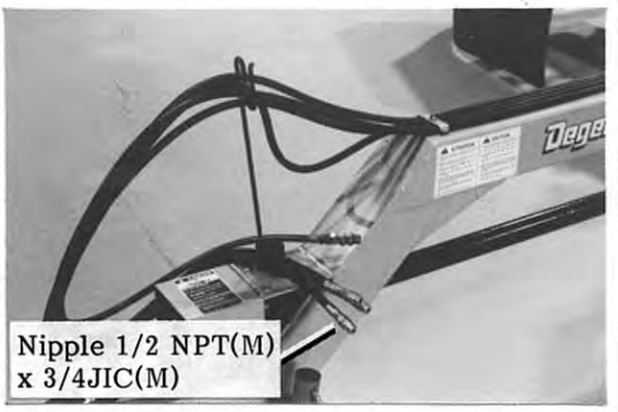

Important: Be sure to install the restrictor fitting to the end of the hose that leads from the base port of pole angling cylinder. This restrictor will slow down the angling speed of frame when swinging into transport, thus providing a safer operating environment.

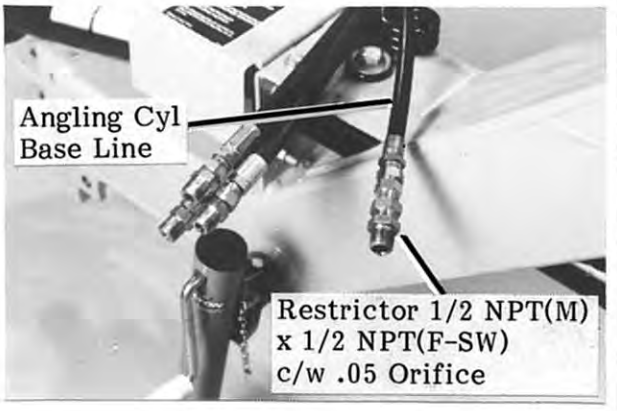

Attach the appropriate quick couplers (not supplied) to the ends of these fittings.

62. Secure the safety chain unit to front of pole as shown using the bolt, lockwasher and nut shown.

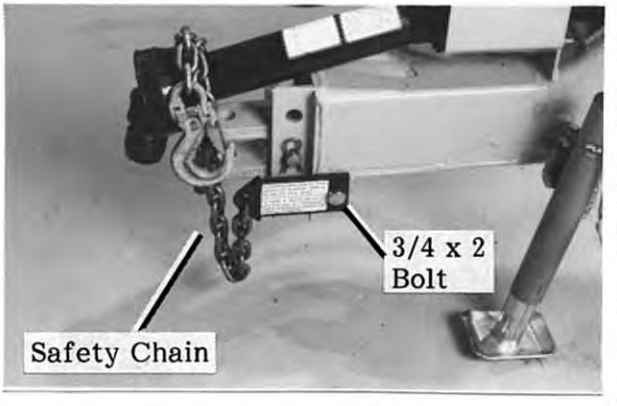

63. Check that all bolted connections have been tightened to torque values shown on Page #1.

Check and tighten all hydraulic fittings and hose connections.

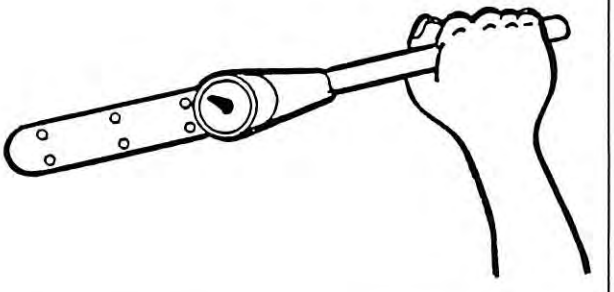

64. Lubricate all grease fitting locations as outlined in the Operator's Manual.



GREASE

65. The machine is now fully assembled and ready for operation. Be sure to read and understand fully the Operator's manual before attaching machine to tractor.

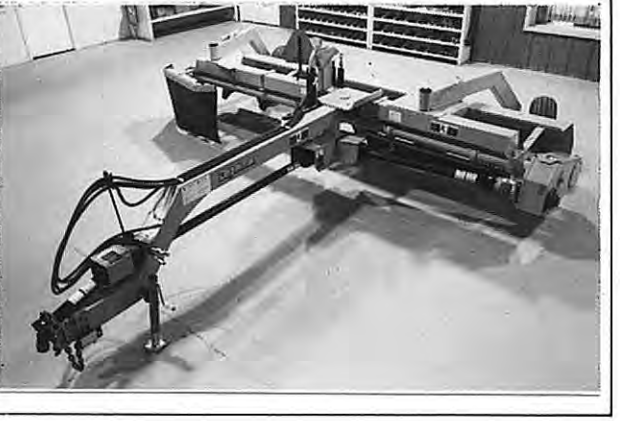

Degelman INDUSTRIES LTD.

rock rake

RR1500

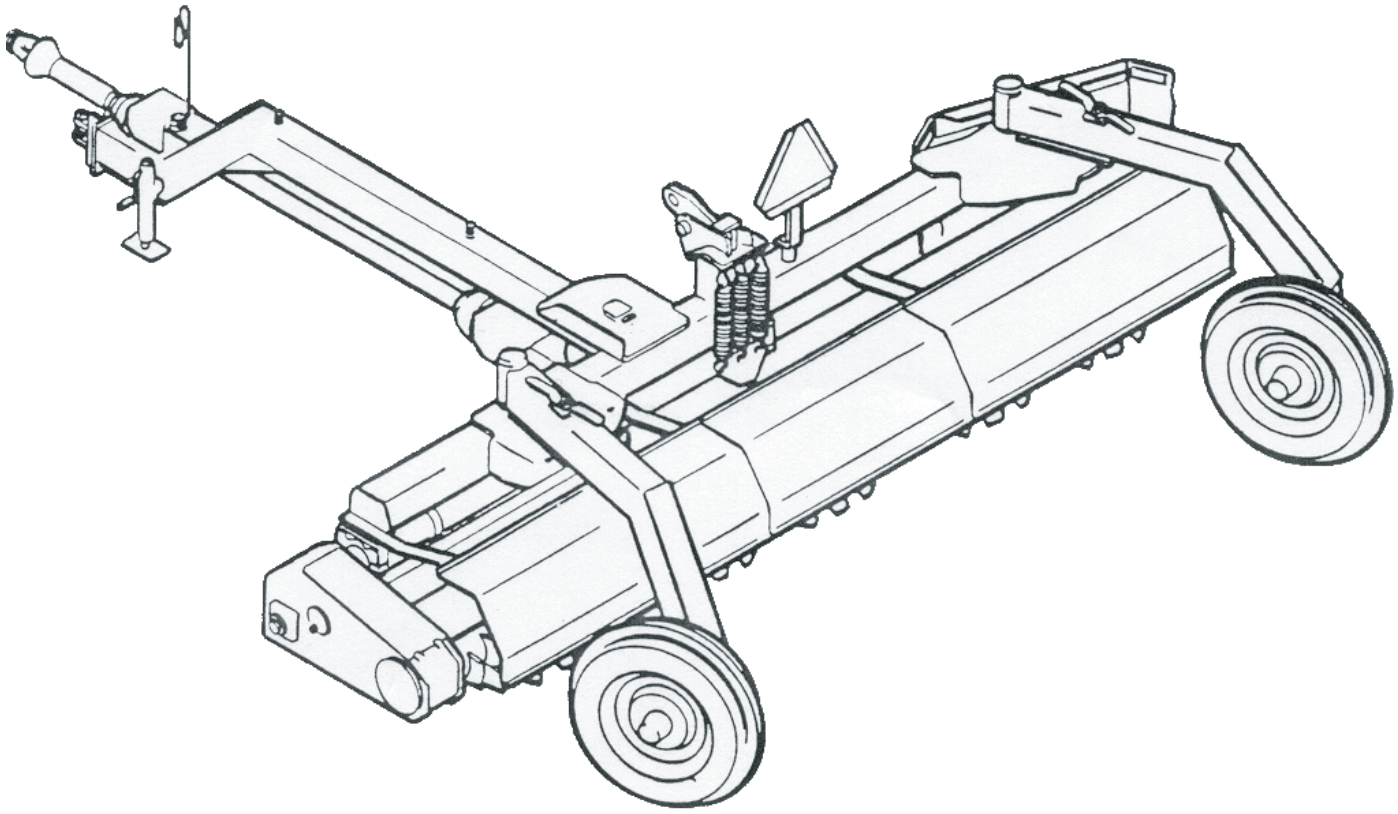

PARTS MANUAL

142352

Degelman INDUSTRIES LTD.

rock rake
RR1500

Basic Components *1*

Hydraulic Components *5*

Drive Systems & Components *7*

Miscellaneous *14*

Record Serial Number:

.....

272 Industrial Drive, Box 830
Regina, Sask. Canada S4P 3B1
306 543-4447 543-2140 fx

degelman@degelman.com

www.degelman.com

Degelman
rock rake
RR1500

ROCKSHAFT, SPIRAL DRUM & CHAIN HOUSING

142352

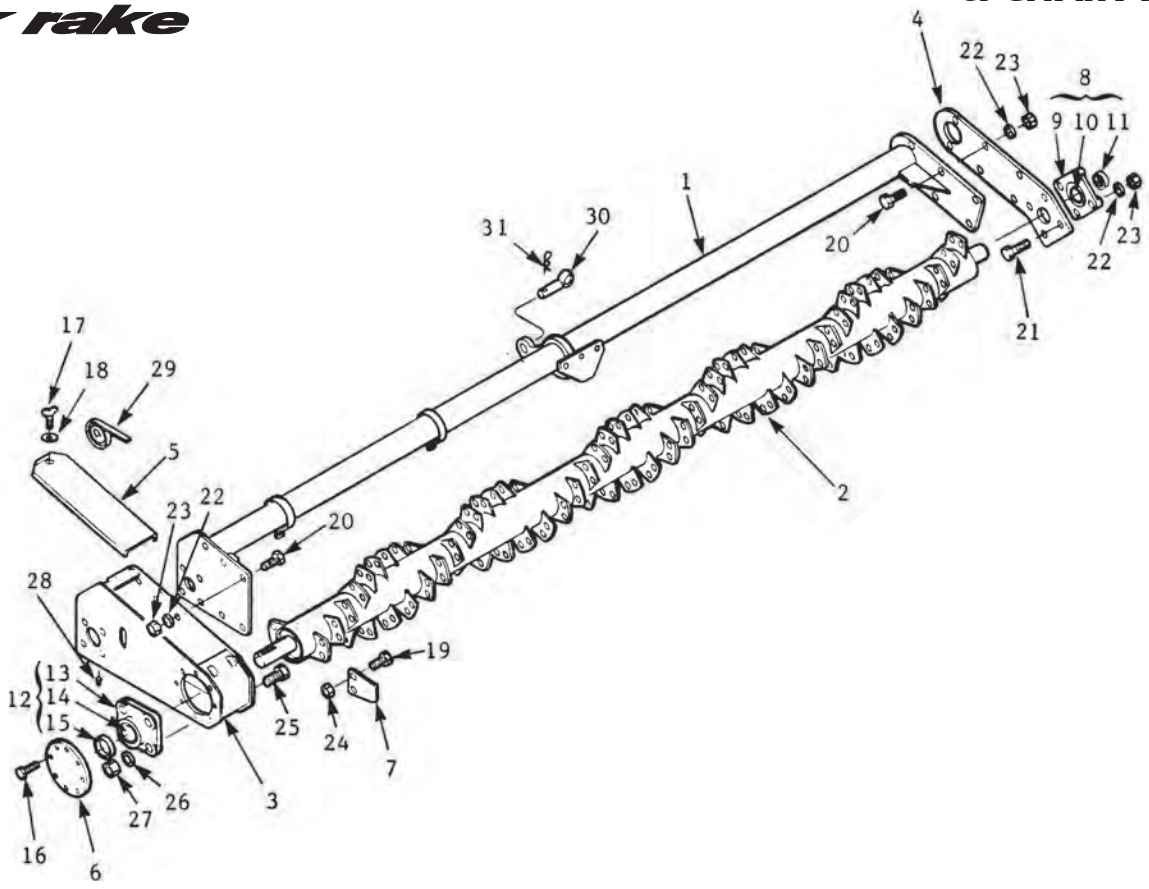

ITEM	PART No.	DESCRIPTION	QTY.
1	305100	Rockshaft - Assembly -RR	1
2	308000	Drum, Spiral - RR	1
3	305214	Chain Housing - Assembly - RR 1500	1
4	305110	Plate, End - Rockshaft - RR	1
5	305108	Lid, Chain Housing - RR	1
6	305130	Plate, Cover - Housing - RR	1
7	305167	Tooth - RR - 1/2 in. thick	83
8	117006	Bearing Unit, Flange - 4 hole - 2 7/16 in.	1
9	117107	Casting, Flange - 4 hole - 2 7/16 in.	1
10	117106	Insert, Bearing 2 7/16 in.	1
11	117022	Collar, Lock 2 7/16 in.	1
12	117115	Bearing Unit, Flange - 4 hole - 2 7/16 in. - heavy duty	1
13	117116	Casting, Flange - 4 hole - 2 7/16 in. - heavy duty	1
14	117117	Insert, Bearing 2 7/16 in. - heavy duty	1
15	117118	Collar, Lock 2 7/16 in. - heavy duty	1
16	118302	Capscrew, Hex 3/8 x 1 in. - self tapping	8
17	118231	Screw, Thumb 3/8 x 1 1/4 in. UNC, Plated	1
18	118511	Washer, Flat 3/8 in. Plated	1
19	118141	Bolt, Hex 5/8 x 1 3/4 in. UNC, Gr8, Plated - special shank	166
20	118026	Bolt, Hex 5/8 x 2 in. UNC, Gr5, Plated	11
21	118028	Bolt, Hex 5/8 x 2 1/2 in. UNC, Gr5, Plated	4
22	118508	Washer, Lock 5/8 in. Plated	15
23	118407	Nut, Hex 5/8 in. UNC, Gr5, Plated	15
24	118447	Nut, Lock 5/8 in. UNC, Gr5, Plated - Uni-torque	166
25	118163	Bolt, Hex 7/8 x 2 1/2 in. UNC, Gr5, Plated	4
26	118561	Washer, Lock 7/8 in. Plated	4
27	118431	Nut, Hex 7/8 in. UNC, Gr5, Plated	4
28	125005	Plug, Port 1/2 NPT(M) - steel	1
29	128011	Weather Strip 8.5 x 19 x 1800mm	1
30	305168	Pin Assembly 25.4 x 95mm (effective)	1
31	118848	Pin, Hair 5/32 in.	1

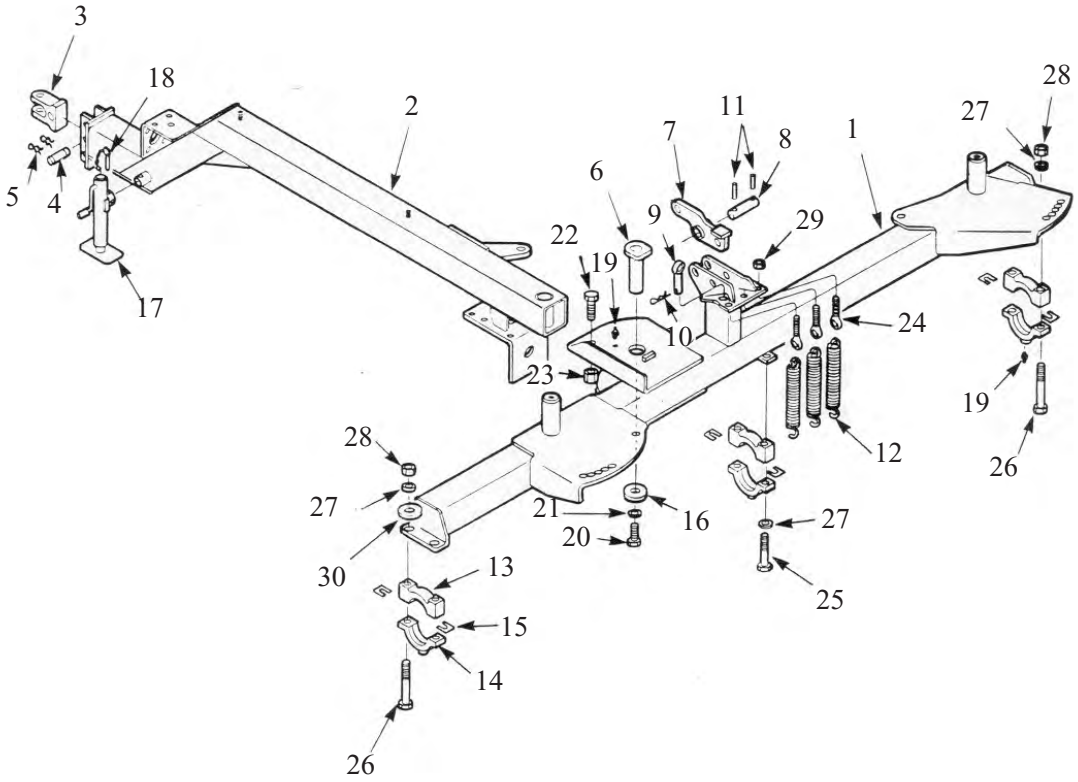

ITEM	PART No.	DESCRIPTION	QTY.
1	305217	Frame, Main - Assembly - RR 1500	1
2	305229	Pole, Hitch - Assembly - RR 1500 (includes Items #3, 4 & 5)	1
3	110002	Casting, Hitch Clevis	1
4	121944	Pin 25.4 x 110mm (effective) Plated - N/D Pin	1
5	118882	Pin, Hair 3/16 x 2 3/4 in. Plated - N/D Pin	2
6	305152	Pin Assembly 52 x 183mm (effective)	1
7	305232	Arm, Hydraulic Float - Assembly - RR 1500	1
8	313020	Pin 1 7/16 x 3 7/16 in. (effective)	1
9	305168	Pin Assembly 25.4 x 95mm (effective)	1
10	118848	Pin, Hair 5/32 in.	1
11	118845	Pin, Roll 5/16 x 2 1/2 in.	2
12	143001	Spring, Tension 14 7/8 in. x 29 Coil	3
13	110003	Casting, Bearing Base #207	3
14	110015	Casting, Bearing Cap #207 c/w Grease Fitting	3
15	611080	Shim 2 x 2 x 14 Gage - galvanized	6
16	229030	Washer, Flat 20 ID x 102 OD x 9mm	1
17	132005	Jack, Side Wind SWS-150-DTSF (includes Item #18)	1
18	118879	Pin, Hitch Jack 9/16 in. dia.	1
19	118335	Grease Fitting 1/4-28 AMNF straight-thread	4
20	118024	Bolt, Hex 5/8 x 1 1/2 in. UNC, Gr5, Plated	1
21	118508	Washer, Lock 5/8 in. Plated	1
22	118175	Bolt, Hex 3/4 x 1 1/2 in. UNF, Gr8, Plated	1
23	118449	Nut, Hex 3/4 in. UNF, Plated - 1 in. high	1
24	118241	Bolt, Eye 3/4 x 5 1/4 in. UNC, Gr5, Plated	3
25	118062	Bolt, Hex 3/4 x 5 1/2 in. UNC, Gr5, Plated	2
26	118158	Bolt, Hex 3/4 x 7 in. UNC, Gr5, Plated	4
27	118509	Washer, Lock 3/4 in. Plated	6
28	118410	Nut, Hex 3/4 in. UNC, Gr5, Plated	4
29	118422	Nut, Lock 3/4 in. UNC, Gr5, Plated	3
30	118516	Washer, Flat 3/4 in. Plated	2

WHEEL LEGS & TIRES / HUBS & SPINDLES

142352

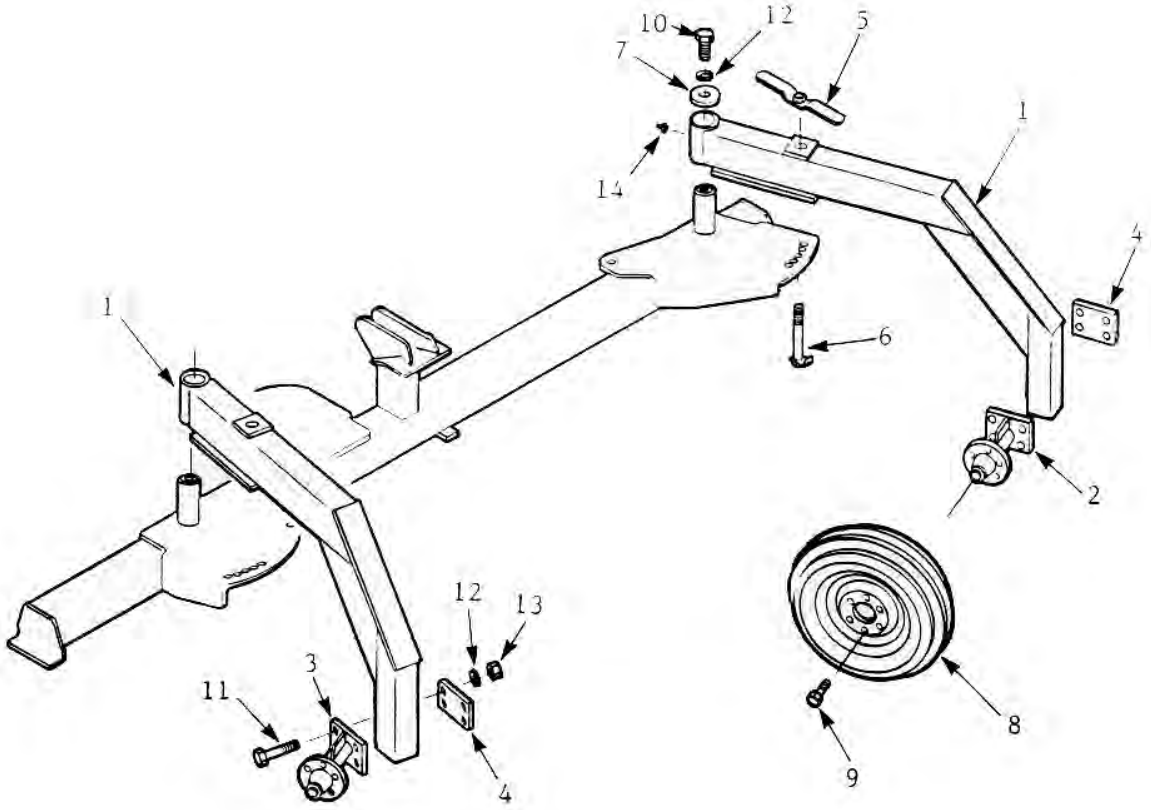

ITEM	PART No.	DESCRIPTION	QTY.
1	305132	Leg, Wheel Assembly - RR	2
2	305210	Hub/Spindle Assembly - H618 - RR - Right Hand (straight)	1
3	305211	Hub/Spindle Assembly - H618 - RR - Left Hand (angled)	1
4	305231	Plate, Bolt - 4 hole - 89 x 118mm hole centres	2
5	305148	Nut, Wing Assembly - 1 in. UNC	2
6	305150	Bolt/Clip Assembly - 1 x 9 in. UNC	2
7	229030	Washer, Flat 20 ID x 102 OD x 9mm	2
8	131062	Wheel Assembly - 9.5L x 15 - 6 ply	2
9	118313	Bolt, Wheel 9/16 x 1 1/16 in. UNF, Gr5, Plated	12
10	118024	Bolt, Hex 5/8 x 1 1/2 in. UNC, Gr5, Plated	2
11	118117	Bolt, Hex 5/8 x 5 in. UNC, Gr5, Plated	8
12	118508	Washer, Lock 5/8 in. Plated	10
13	118407	Nut, Hex 5/8 in. UNC, Gr5, Plated	8
14	118335	Grease Fitting 1/4-28 AMNF straight-thread	2

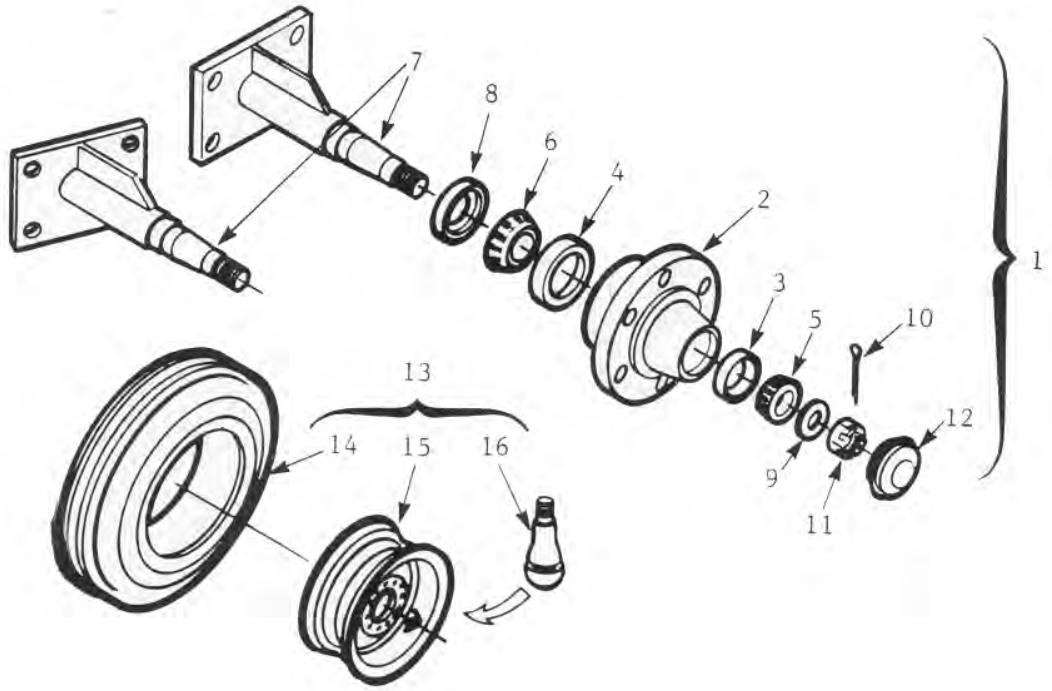

ITEM	PART No.	DESCRIPTION	QTY.
1	305210	Hub/Spindle Assembly - H618 - RR - Right Hand (straight)	1
	305211	Hub/Spindle Assembly - H618 - RR - Left Hand (angled)	
2	131013	Hub H618G c/w Grease Fitting	1
3	131025	Cup, Bearing #LM48510 - 2.563 in. OD	1
4	131023	Cup, Bearing #25520 - 3.265 in. OD	1
5	131024	Cone, Bearing #LM48548 - 1.375 in. ID	1
6	131022	Cone, Bearing #25580 - 1.750 in. ID	1
7	305212	Axle Assembly - RR - Right Hand w/o Hub	1
	305213	Axle Assembly - RR - Left Hand w/o Hub	
8	131026	Seal, Dust CR#20140 - 2.000 in. ID	1
9	131020	Washer, Flat 1 in. SAE	1
10	118835	Pin, Cotter 3/16 x 1 1/2 in.	1
11	118423	Nut, Slotted 1 in. UNS, Gr5	1
12	131016	Cap, Hub H618 & H619 Hub	1
13	131062	Wheel Assembly 9.5L x 15 - 6 Ply	2
14	127003	Tire 9.5L x 15 - 6 Ply Tubeless	1
15	131001	Rim, Wheel 15 x 8 - 6 Bolt	1
16	127006	Valve Stem TR415	1

HYDRAULIC LAYOUT / HYDRAULIC CYLINDER (Optional)

142352

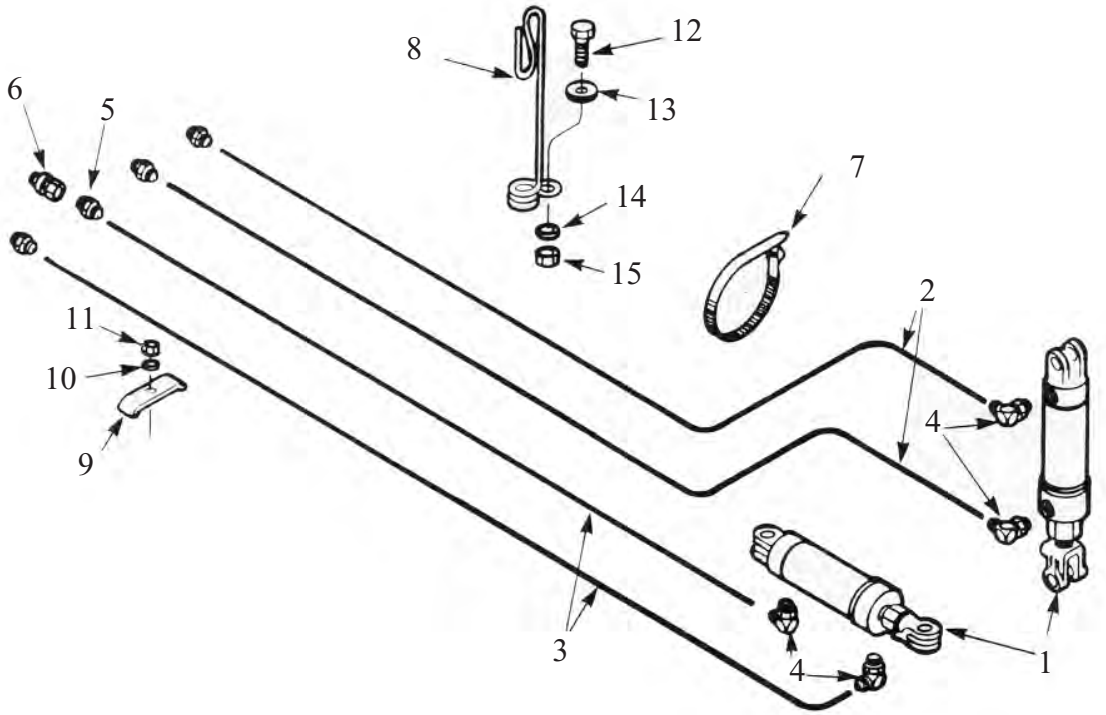

ITEM	PART No.	DESCRIPTION	QTY.
1	121480	Cylinder, Hydraulic 3 x 8 in. - DIL	2
2	126508	Hose 3/8 x 183 in. 2WB - 3/4 JIC(F-SW)	2
3	126531	Hose 3/8 x 156 in. 2WB - 3/4 JIC(F-SW)	2
4	141504	Elbow, 90° 3/4 JIC(M) x 3/4 ORB(M)	4
5	141514	Nipple 1/2 NPT(M) x 3/4 JIC(M)	4
6	141000	Adapter 1/2 NPT(M) x (F-SW) - .05 Orifice	1
7	133007	Tie, Hose - Plastic - Releasable 1/16 x 1/2 x 22 in.	1
8	143111	Holder, Hose - Flexible	1
9	660747	Hose Clip - 4 hose - Plated	2
10	118530	Washer, Lock 5/16 in. Plated	2
11	118427	Nut, Hex 5/16 in. UNC, Gr5, Plated	2
12	118026	Bolt, Hex 5/8 x 2 in. UNC, Gr5, Plated	1
13	118514	Washer, Flat 5/8 in. Plated	1
14	118508	Washer, Lock 5/8 in. Plated	1
15	118407	Nut, Hex 5/8 in. UNC, Gr5, Plated	1

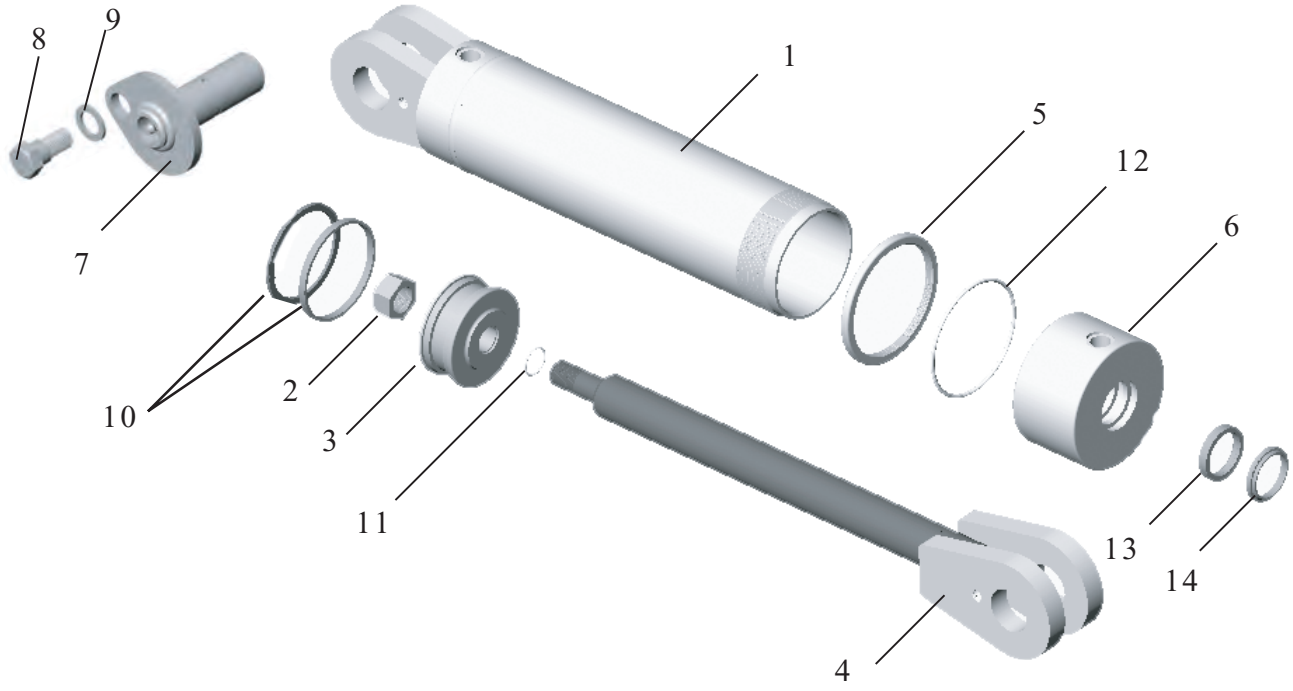

ITEM	PART NO.	DESCRIPTION	QTY.
-	121480	Cylinder Hydraulic 3 x 8 in. - DIL	a/r
1	121615	Barrel Assembly 3 x 8 in. - DIL	1
2	118441	Nut, Lock 7/8 in. UNF, GR5, Plated, Uni-torque	1
3	121606	Piston 3 in. Cylinder (U-Cup Type) - DIL	1
4	122097	Rod Assy - Cyl 3 x 8 - DIL	1
5	121745	Ring, Lock - 3 in. Cyl - DIL	1
6	121624	Cap, Open 3 in. Cylinder 1-1/4 in. Rod - DIL	1
7	118930	Pin Assy, Clevis Pin	2
8	118008	Bolt, Hex 1/2 x 1 GR5	2
9	118504	Washer, Lock 1/2 PL	2
--	121719	Kit, Seal 3 in. Cylinder 1-1/4 in. Rod - DIL	a/r
10	--	Seal, U-Cup	1
11	--	Seal, O-Ring	1
12	--	Seal, O-Ring	1
13	--	Seal, U-Cup	1
14	--	Seal, Rod Wiper	1

DRIVE COMPONENTS LAYOUT

142352

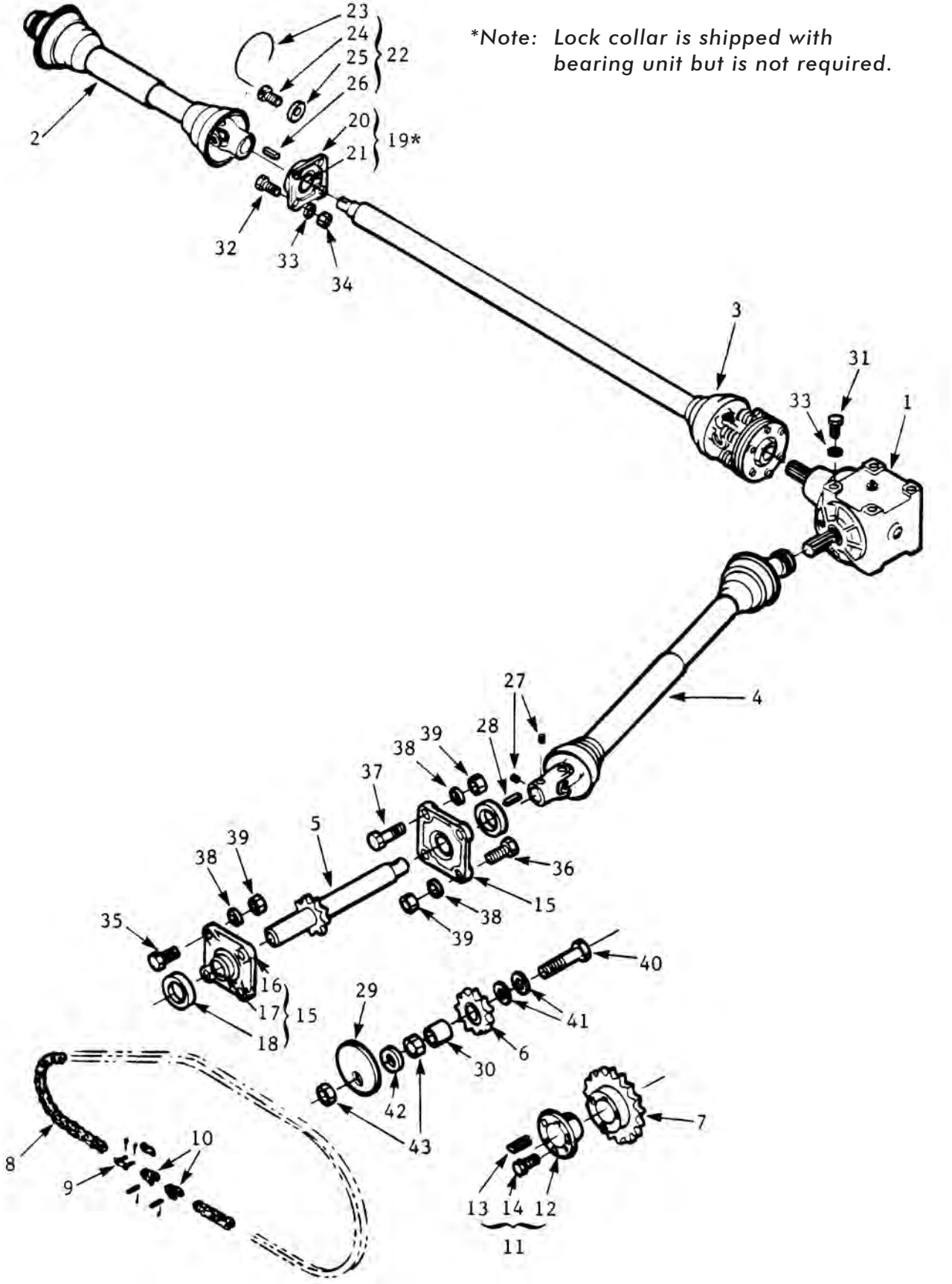

*Note: *Lock collar is shipped with bearing unit but is not required.*

ITEM	PART No.	DESCRIPTION	QTY.
1	119187	Gear Box 2:1 - Hub City Model 88 - Splined (540 PTO)	1
	119190	Gear Box 3:1 - Hub City Model 88 - Splined (1000 PTO)	
2	119251	Shaft, Slider 28.1 in. LOA - Weasler - 6 Spline (540 PTO)	1
	119265	Shaft, Slider 28.1 in. LOA - Weasler - 21 Spline (1000 PTO)	
3	119275	Shaft, Drive 85.1 in. c/w Torque Limiter - Weasler	1
4	119335	Shaft, Slider 41.25 LOA - Weasler - Quick Disconnect	1
5	305175	Shaft, Input Assembly - 9 Tooth - RR	1
6	122006	Sprocket, Idler 100A - 11 Tooth c/w Bearing	1
7	122030	Sprocket 100Q - 14 Tooth - tapered bore (540 PTO)	1
	122018	Sprocket 100Q - 17 Tooth - tapered bore (1000 PTO)	
8	120017	Chain, Roller #100 - 51 Link	1
9	120005	Link, Connector #100 - Std	1
10	120006	Link, Offset #100 - Std	1/540 or 2/1000
11	122021	Kit, Split Taper Bushing 2 7/16 in. Q1	1
12	--	Bushing, Split Taper	1
13	122020	Key, Stepped 5/8 x 11/16 x 2 1/2 in.	1
14	118129	Bolt, Hex 3/8 x 1 1/4 in. UNC, Gr5, Plated	3
15	117004	Bearing Unit, Flange - 4 hole - 2 in.	2
16	117105	Casting, Flange - 4 hole - 2 7/16 in. Bearing	1
17	117104	Insert, Bearing 2 in.	1
18	117088	Collar, Lock 2 in. Bearing 3 in. OD	1
19	117089	Bearing Unit, Flange - 4 hole - 1 3/8 in.	1
20	117091	Casting, Flange - 4 hole - 1 3/8 in. Bearing	1
21	117090	Insert, Bearing 1 3/8 in.	1
22	119340	Bag, Hdw - RR - supplied by Weasler	1
23	--	Tie Wire	1
24	--	Bolt, Hex - drilled head 1/2 x 1/4 in. UNF	1
25	--	Washer, Flat 1 1/2 OD x 33/64 ID x 1/4 in. thick	1
26	--	Key 3/8 x 5/16 x 1 3/8 in. long	1
27	118301	Setscrew, Allen 3/8 x 1/2 in. UNC	2
28	119132	Key 3/8 x 3/8 x 1 1/2 in.	1
29	304050	Cover, Idler Sprocket - RR	1
30	305129	Bushing 33.3 OD x 3.2 W x 32mm	1
31	118011	Bolt, Hex 1/2 x 1 1/2 in. UNC, Gr5, Plated	4
32	118014	Bolt, Hex 1/2 x 2 in. UNC, Gr5, Plated	4
33	118504	Washer, Lock 1/2 in. Plated	8
34	118405	Nut, Hex 1/2 in. UNC, Gr5, Plated	4
35	118026	Bolt, Hex 5/8 x 2 in. UNC, Gr5, Plated	4
36	118028	Bolt, Hex 5/8 x 2 1/2 in. UNC, Gr5, Plated	2
37	118030	Bolt, Hex 5/8 x 3 in. UNC, Gr5, Plated	2
38	118508	Washer, Lock 5/8 in. Plated	8
39	118407	Nut, Hex 5/8 in. UNC, Gr5, Plated	8
40	118116	Bolt, Hex 1 x 4 1/2 in. UNC, Gr5, Plated	1
41	118526	Washer, Flat 1 1/32 x 1 1/2 x 10 Gage, Plated	2
42	118501	Washer, Flat 1 1/16 x 2 1/2 x 3/8 in. Plated	1
43	118450	Nut, Jam 1 in. UNC, Gr2, Plated	2

GEAR BOX 2:1 (540 PTO)
HUB CITY

142352

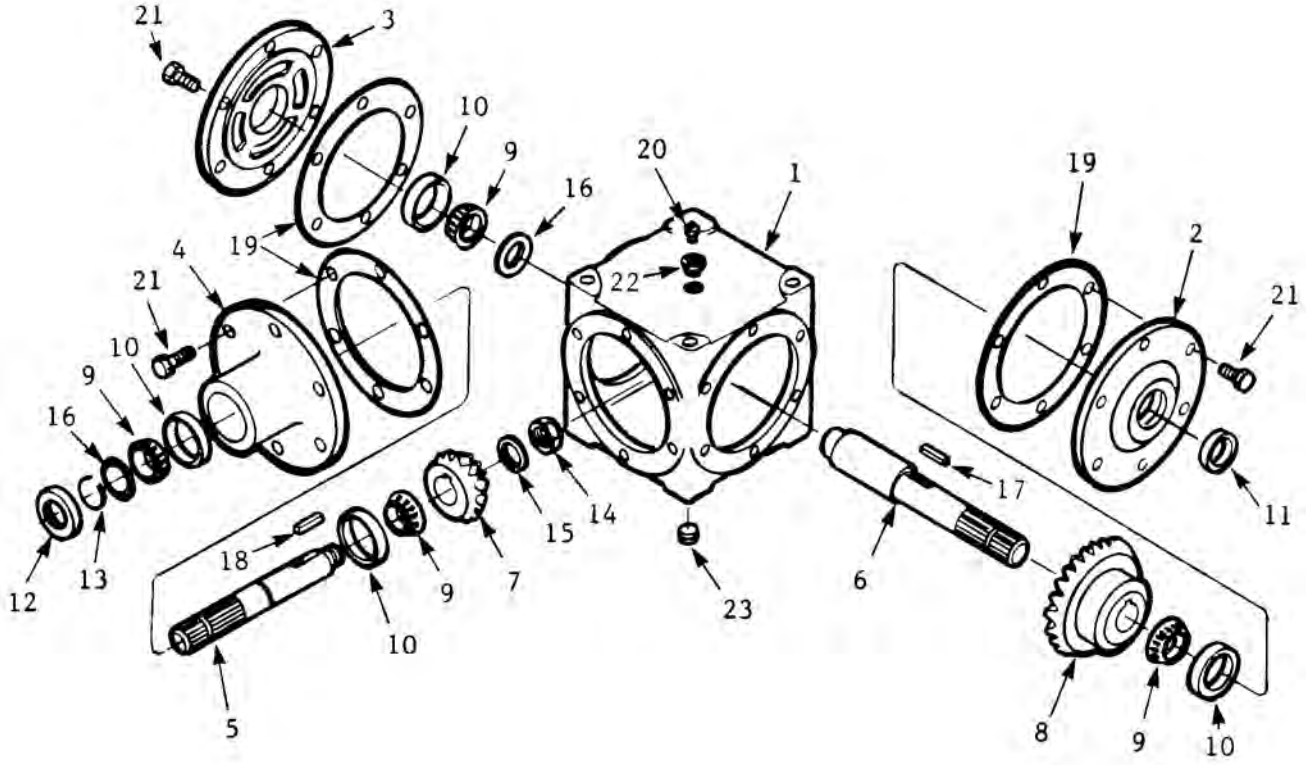

ITEM	PART No.	DESCRIPTION	QTY.
—	119187	Gear Box 2:1 - Hub City Model 88 - Splined - Complete	1
1	119003	Housing, Gear Box 2:1 & 3:1 - Hub City	1
2	119004	Cap, Open 2:1 & 3:1 - Hub City	1
3	119005	Cap, Blank 2:1 & 3:1 - Hub City	1
4	119006	Cap, Input 2:1 & 3:1 - Hub City	1
5	119188	Shaft, Input 2:1 - 1 3/8 in. - 6 Spline - Hub City	1
6	119189	Shaft, Output 2:1 - 1 3/8 in. - 6 Spline - Hub City	1
7	119024	Gear, Pinion 2:1 - 15 Tooth - Hub City	1
8	119025	Gear, Crown 2:1 - 30 Tooth - Hub City	1
9	131024	Cone, Bearing #LM48548 - 1.375 in. ID	4
10	131025	Cup, Bearing #LM48510 - 2.563 in. OD	4
11	119012	Seal, Dust CR#13535 - 1.375 in. ID	1
12	119013	Seal, Dust CR#13876 - 1.375 in. ID	1
13	—	Ring, Retaining (H/C #8-47-17-86-010)	1
14	—	Nut, Input Shaft - 1 - 14 UNF (H/C #8-47-16-14-005)	1
15	—	Washer, Input Shaft 1 1/64 x 1 5/8 x 1/8 in. (H/C #8-47-16-01-024)	1
16	—	Spacer 1 25/64 x 1 7/8 x .146 in. (H/C #8-47-16-01-023)	2
17	119018	Key 5/16 x 5/16 x 1 3/4 in.	1
18	119028	Key 5/16 x 5/16 x 1 1/2 in.	1
19	—	Gasket (H/C #0223-00845-088)	15
20	119020	Vent, Pressure Relief 1/8 NPT(M)	1
21	118005	Bolt, Hex 3/8 x 1 in. UNC, Gr5, Plated	18
22	119021	Reducer 1/8 NPT(F) x 1/2 NPT(M)	1
23	119016	Plug, Port 1/2 NPT(M) Allen Head	2
—	119029	Kit, Repair #88 Gear Box - Hub City (Items #11-20 inclusive)	1

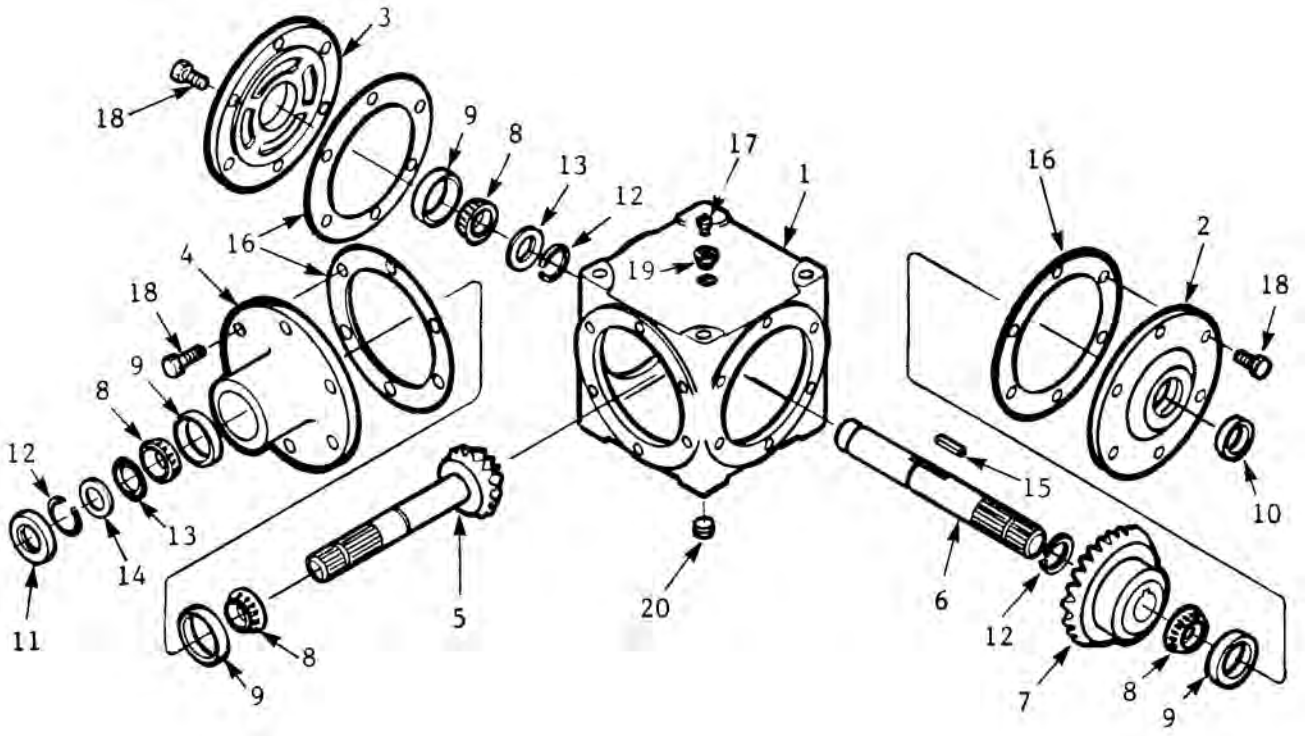

ITEM	PART No.	DESCRIPTION	QTY.
—	119190	Gear Box 3:1 - Hub City Model 88 - Splined - Complete	1
1	119003	Housing, Gear Box 2:1 & 3:1 - Hub City	1
2	119004	Cap, Open 2:1 & 3:1 - Hub City	1
3	119005	Cap, Blank 2:1 & 3:1 - Hub City	1
4	119006	Cap, Input 2:1 & 3:1 - Hub City	1
5	119191	Shaft, Input 3:1 - 1 3/8 in. - 6 Spline - 13 Tooth - Hub City	1
6	119192	Shaft, Output 3:1 - 1 3/8 in. - 6 Spline - Hub City	1
7	119009	Gear, Crown 3:1 - 39 Tooth - Hub City	1
8	131024	Cone, Bearing #LM48548 - 1.375 in. ID	4
9	131025	Cup, Bearing #LM48510 - 2.563 in. OD	4
10	119012	Seal, Dust CR#13535 - 1.375 in. ID	1
11	119013	Seal, Dust CR#13876 - 1.375 in. ID	1
12	—	Ring, Retaining (H/C #8-47-17-86-010)	3
13	—	Spacer 1 25/64 x 1 7/8 x .146 in. (H/C #8-47-16-01-023)	2
14	—	Shim 1 3/8 x 1 7/8 x .005 in. (H/C #8-47-16-01-010)	1
15	119018	Key 5/16 x 5/16 x 1 3/4 in.	1
16	—	Gasket (H/C #0223-00845-008)	15
17	119020	Vent, Pressure Relief 1/8 NPT(M)	1
18	118005	Bolt, Hex 3/8 x 1 in. UNC, Gr5, Plated	18
19	119021	Reducer 1/8 NPT(F) x 1/2 NPT(M)	1
20	119016	Plug, Port 1/2 NPT(M) Allen Head	2
—	119029	Kit, Repair #88 Gear Box - Hub City (Items #10-17 inclusive)	1

SLIDER SHAFT c/w QUICK DISCONNECT
WEASLER - 14NW

142352

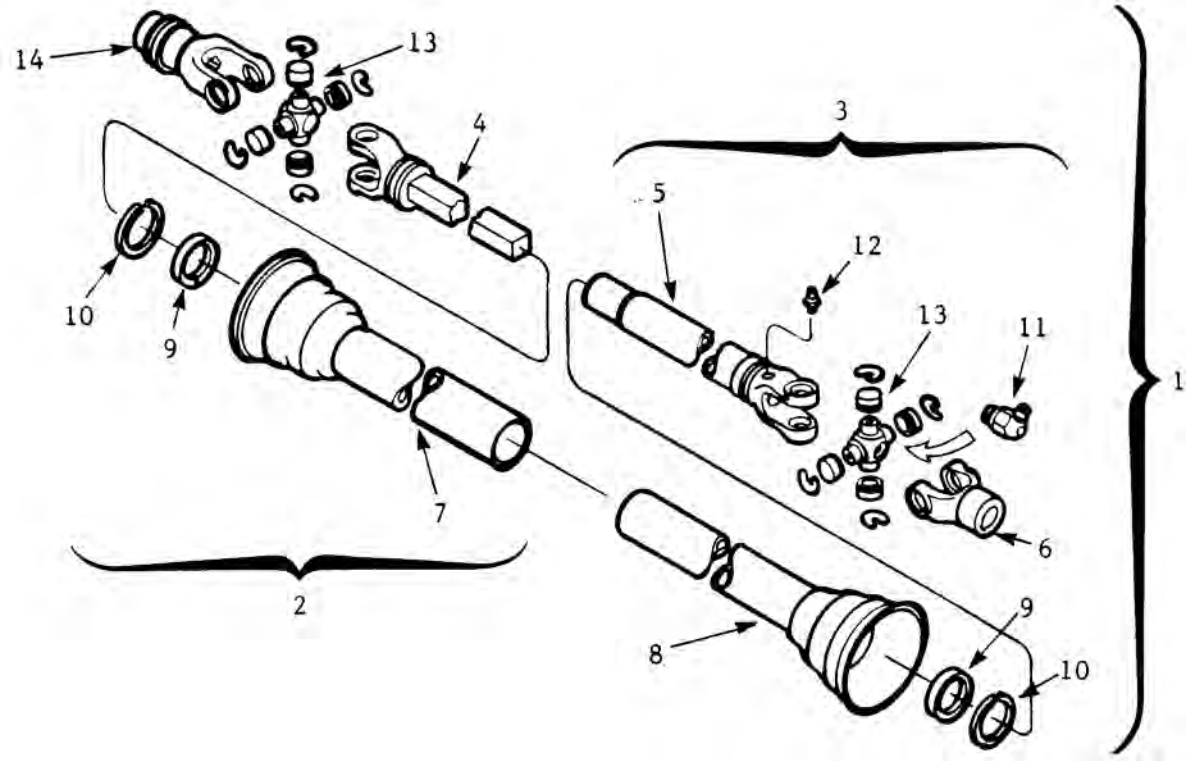

ITEM	PART No.	DESCRIPTION	QTY.
1	119265 119251	Shaft, Slider 28.1 in. (overall) - Weasler - 14NW (21 Spline Q.D.) Shaft, Slider 28.1 in. (overall) - Weasler - 14NW (6 Spline Q.D.)	1
2	119266 119252	Shaft, Half - Bar 28 in. - Weasler - 14NW (21 Spline Q.D.) Shaft, Half - Bar 28 in. - Weasler - 14NW (6 Spline)	1
3	119253	Shaft, Half - Tube 28 in. - Weasler - 14NW	1
4	119254	Yoke/Bar 17.38 in. long - Weasler - 14NW	1
5	119255	Yoke/Tube 16.13 in. long - Weasler - 14NW	1
6	119257	Yoke 1 5/16 in. Bore - Weasler - 14NW	1
7	119258	Shield, Outer - PVC - 16 in. - Weasler (c/w #9 & #10)	1
8	119259	Shield, Inner - PVC - 16 in. - Weasler (c/w #9 & #10)	1
9	119260	Bearing, Shield Support - Weasler - 14NW/35NW	2
10	119261	Ring, Retainer - Weasler - 14NW/35NW	2
11	119262	Grease Fitting 1/8 NPT - 75°	2
12	118335	Grease Fitting 1/4-28 AMNF straight-thread	1
13	119118	Kit, Cross and Bearing - Hayes 1240	2
14	119256 119267	Yoke 1 3/8 in. Q.D. - 6 Spline - Weasler - 14NW Yoke 1 3/8 in. Q.D. - 21 Spline - Weasler - 14NW	1

DRIVE SHAFT c/w NON-ADJUSTING CLUTCH WEASLER - 12000 IN LBS

Degelman

142352

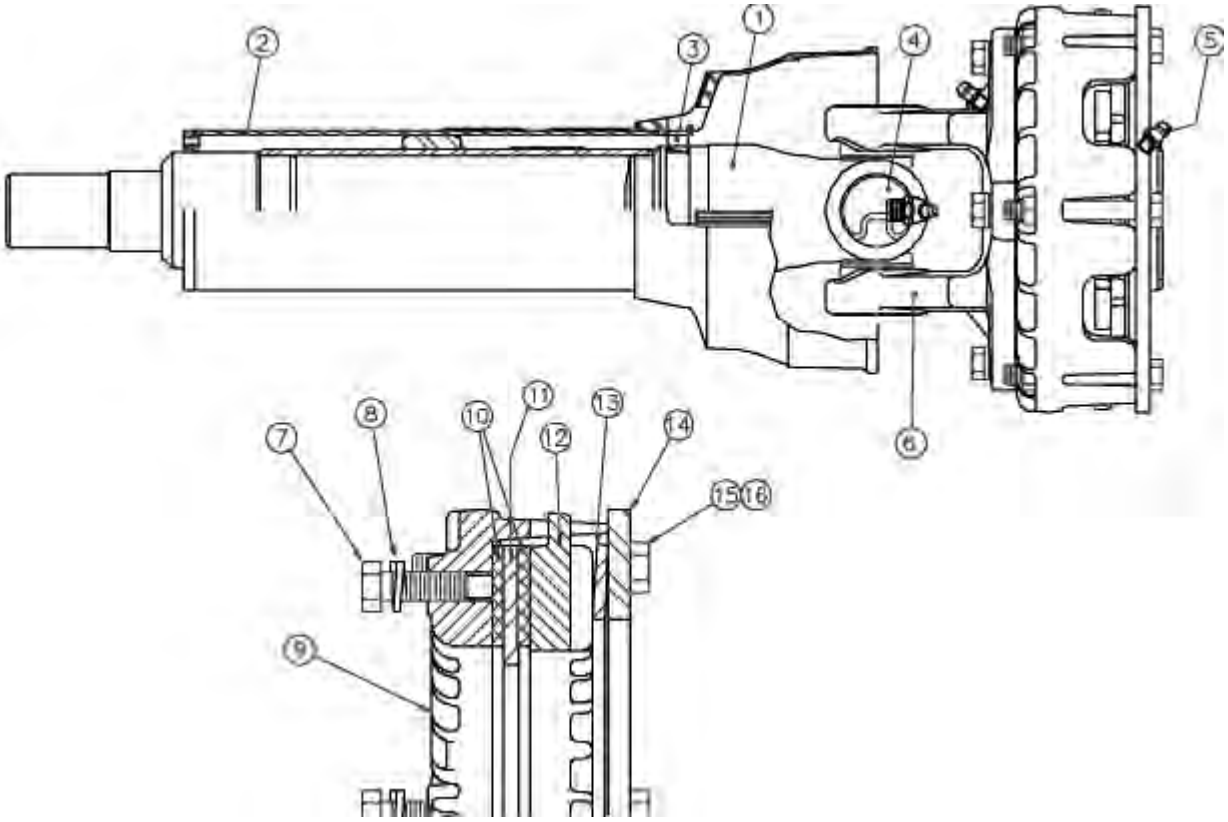

ITEM	PART NO.	DESCRIPTION	QTY.
--	119275	Drive Sft - C/W Non-Adjusting Clutch 12000 in. lb.	a/r
1	119276	Yoke/Shaft Assy - 80.19 LG	1
2	119277	Shield, Outer - PVC - 76.5 LG	1
3	119428	Repair Kit, Nylon	1
4	119129	Kit, Cross & Brg	1
5	118335	Grease Ftg 1/4 - 28 AMNF-STR	2
6	119372	Yoke/Hub - WSLR (#38-60022)	1
7	118792	Bolt, Hex 5/16 x 1 UNC GR8 PL	4
8	118530	Washer, Lock 5/16 PL	4
9	119374	Housing, Clutch - WSLR (#80281-1000)	1
10	119375	Disc, Friction - WSLR (#11-11167)	2
11	119376	Plate, Separato - WSLR (#20-15143)	1
12	119377	Plate, Pressure - WSLR (#80311-1000)	1
13	119383	Spg, Disc - WSLR (#23-15038) - 12000 lb	1
14	119379	Plate, Compression - WSLR (#38-40075)	1
15	118783	Bolt, Hex 5/16 x 2-1/2 UNC GR8 PL	6
16	118427	Nut, Hex 5/16 UNC GR5 PL	6

SLIDER SHAFT c/w QUICK DISCONNECT WEASLER - 35 NW

142352

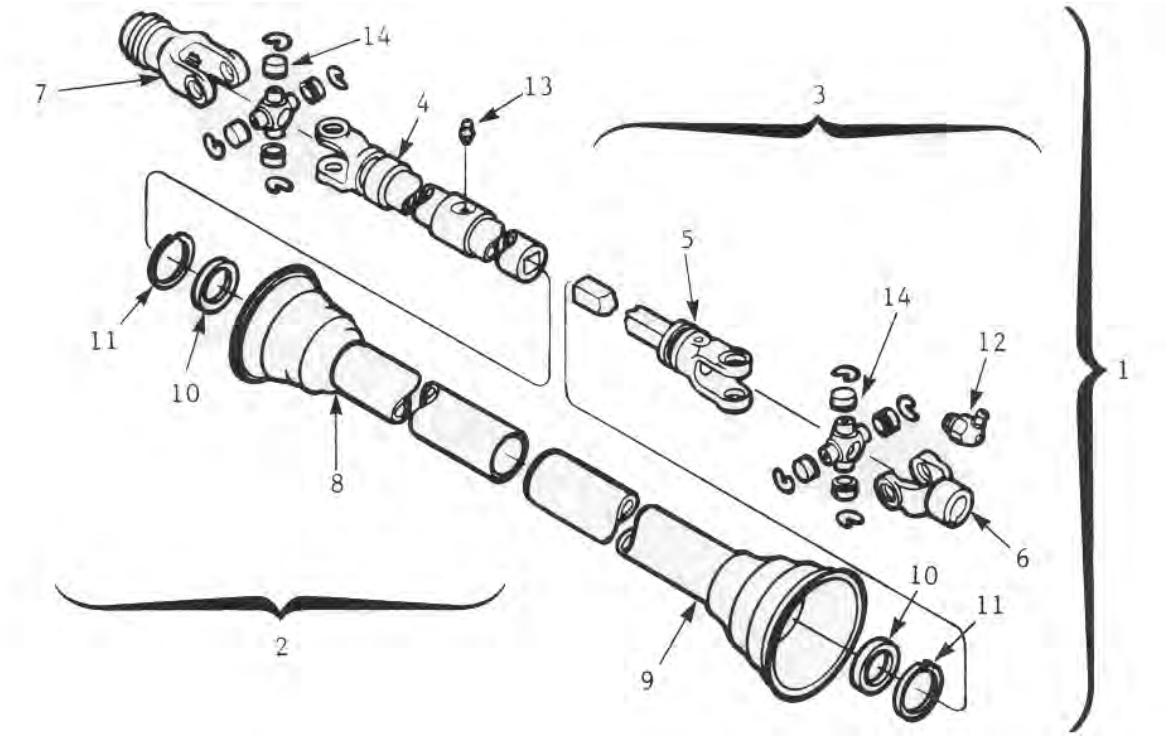

ITEM	PART No.	DESCRIPTION	QTY.
1	119335	Shaft, Slider 41.25 in. LOA - Weasler - Quick Disconnect - 35NW	1
2	119339	Shaft, Half - Tube 41.25 in. - Weasler - 35NW c/w Q.D.	1
3	119336	Shaft, Half - Bar 41.25 in. - Weasler - 35NW - 1 3/4 Yoke	1
4	119344	Yoke/Tube - Assembly 27.19 in. - Weasler - 35NW	1
5	119337	Yoke/Shaft - Assembly 27.75 in. - Weasler - 35NW	1
6	119316	Yoke 1 3/4 in. Bore - Weasler - 35NW	1
7	119331	Yoke 1 3/8 in. Quick Disconnect - 6 Spline - Weasler - 35NW	1
8	119345	Shield, Inner - PVC - 28 in. LOA - Weasler - 35NW	1
9	119338	Shield, Outer - PVC - 17 in. LOA - Weasler - 35NW	1
10	119260	Bearing, Shield Support - Weasler - 35NW	1
11	119261	Ring, Retainer - Weasler - 14NW/35NW	1
12	119262	Grease Fitting 1/8 NPT - 75°	2
13	118335	Grease Fitting 1/4-28 AMNF straight-thread	1
14	119129	Kit, Cross and Bearing - Hayes 1340	2

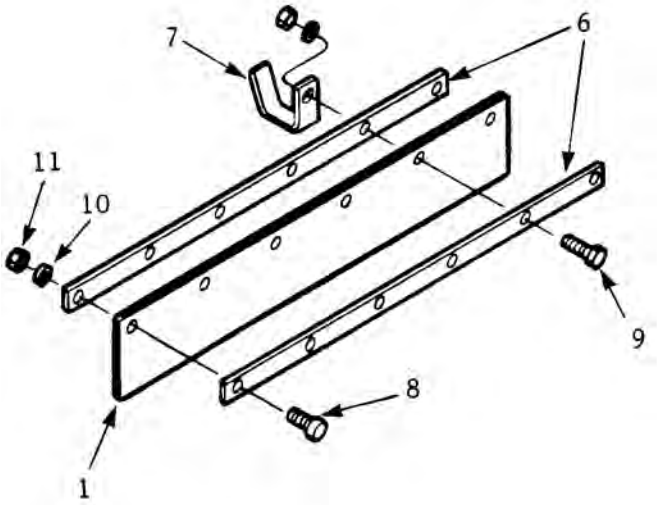

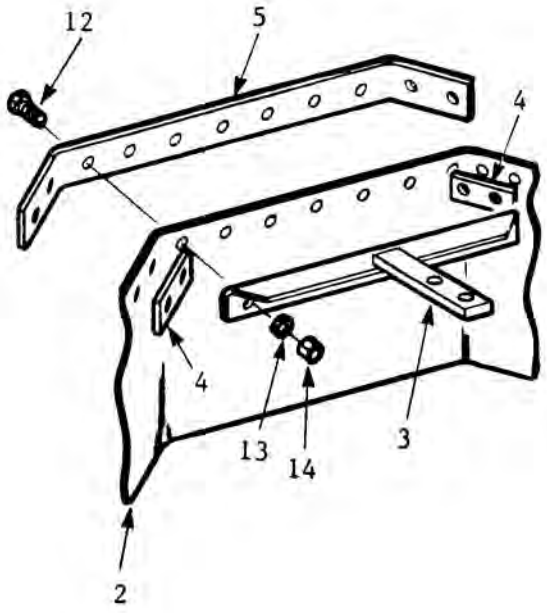

ITEM	PART No.	DESCRIPTION	QTY.
1	128010	Flap, Rock Guard 230 x 1448mm	1
2	305240	Flap, Rock Guard 686 x 1473mm	1
3	305238	Bracket, Stone Guard - RR 1500	1
4	305241	Bar, Bolt - 2 hole - 140mm hole centres	2
5	305242	Bar, Bolt - 11 hole - 139.7mm hole centres	1
6	235040	Strap, Flap 57 in. long	2
7	305164	Bracket, Drive Shaft Support - RR	1
8	118136	Bolt, Hex 3/8 x 1 1/2 in. UNC, Gr5, Plated	5
9	118087	Bolt, Hex 3/8 x 2 in. UNC, Gr5, Plated	1
10	118503	Washer, Lock 3/8 in. Plated	6
11	118403	Nut, Hex 3/8 in. UNC, Gr5, Plated	6
12	118014	Bolt, Hex 1/2 x 2 in. UNC, Gr5, Plated	11
13	118504	Washer, Lock 1/2 in. Plated	11
14	118405	Nut, Hex 1/2 in. UNC, Gr5, Plated	11

142352

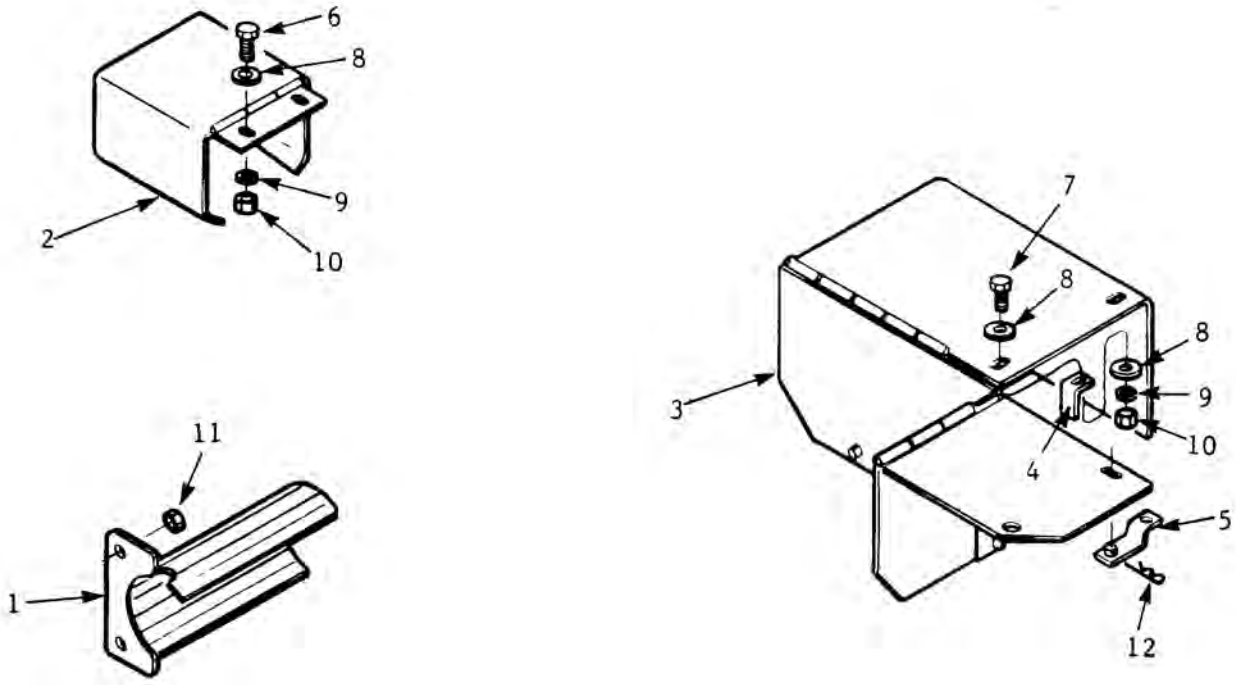

ITEM	PART No.	DESCRIPTION	QTY.
1	305243	Shield - Chain Case Input Shaft - RR 1500	1
2	305249	Shield - Front PTO - Assembly - RR 1500 (c/w 540 PTO decal)	1
	305248	Shield - Front PTO - Assembly - RR 1500 (c/w 1000 PTO decal)	
3	305253	Shield - Gear Box - Assembly - RR 1500	1
4	305287	Clip, Back-up - Gear Box Shield	1
5	305285	Bar, Support - Assembly - Gear Box Shield	1
6	118005	Bolt, Hex 3/8 x 1 in. UNC, Gr5, Plated	2
7	118136	Bolt, Hex 3/8 x 1 1/2 in. UNC, Gr5, Plated	2
8	118511	Washer, Flat 3/8 in. Plated	5
9	118503	Washer, Lock 3/8 in. Plated	4
10	118403	Nut, Hex 3/8 in. UNC, Gr5, Plated	4
11	118416	Nut, Jam 5/8 in. UNC, Gr2, Plated	2
12	118831	Pin, Hair 1/8 x 2 3/8 in. Plated	1

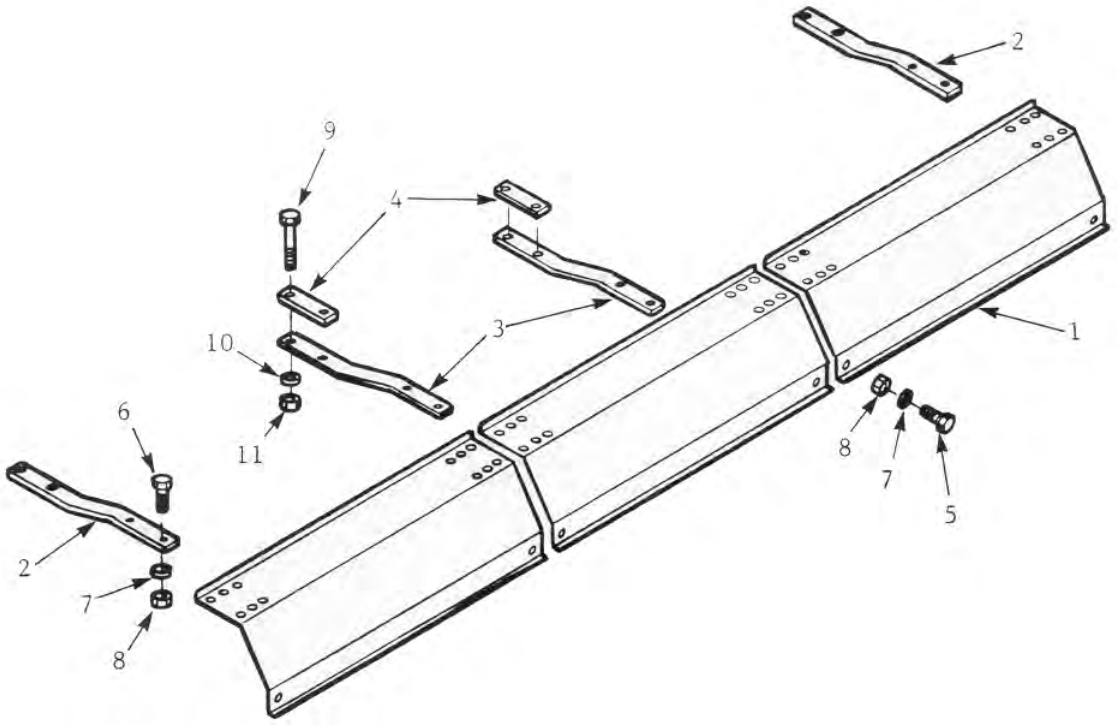

ITEM	PART No.	DESCRIPTION	QTY.
1	305252	Shield, Drum - RR 1500	3
2	305174	Bracket, Shield Support - RR (21mm large holes)	2
3	305173	Bracket, Shield Support - RR (14mm holes)	2
4	312002	Bar, Bolt - 2 hole - 6 5/8 in. hole centres	2
5	118005	Bolt, Hex 3/8 x 1 in. UNC, Gr5, Plated	2
6	118136	Bolt, Hex 3/8 x 1 1/2 in. UNC, Gr5, Plated	8
7	118503	Washer, Lock 3/8 in. Plated	10
8	118403	Nut, Hex 3/8 in. UNC, Gr5, Plated	10
9	118171	Bolt, Hex 1/2 x 7 1/2 in. UNC, Gr5, Plated	4
10	118504	Washer, Lock 1/2 in. Plated	4
11	118405	Nut, Hex 1/2 in. UNC, Gr5, Plated	4

SLOW MOVING VEHICLE SIGN & SAFETY CHAIN

142352

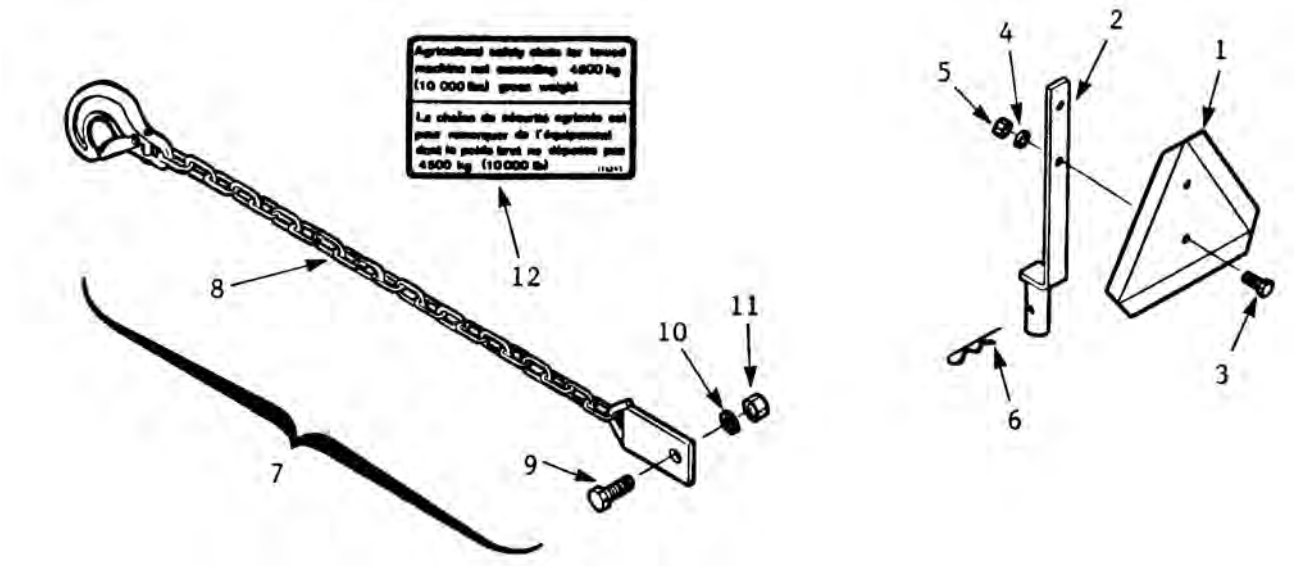

ITEM	PART No.	DESCRIPTION	QTY.
1	142135	Sign, Slow Moving Vehicle - Rigid	1
2	305235	Bracket, SMV - Assembly - RR 1500	1
3	118123	Bolt, Hex 1/4 x 1 in. UNC, Gr5, Plated	2
4	118533	Washer, Lock 1/4 in. Plated	2
5	118402	Nut, Hex 1/4 in. UNC, Gr5, Plated	2
6	118848	Pin, Hair 5/32 in.	1
7	116245	Carton - Safety Chain - 4500 Kg	1
		consists of:	
8	116244	Chain, Safety - Assembly - 4500 Kg c/w Items #9, 10, 11 & 12	1
9	118043	Bolt, Hex 3/4 x 2 in. UNC, Gr5, Plated	1
10	118509	Washer, Lock 3/4 in. Plated	1
11	118410	Nut, Hex 3/4 in. UNC, Gr5, Plated	1
12	116243	Decal, Identification "Ag Safety Chain"	1

The installation of this 14 tooth optional sprocket kit in place of the standard 9 tooth sprocket unit has been designed for the purpose of increasing the spiral drum speed.

To install, proceed as follows:

1. Secure both 2 in. dia. bearings to chain housing using the bolts, lock-washers and nuts shown.

2. Remove protective coating from shaft (1) using solvent and slide shaft through bearing approximately half-way into chain housing.

3. Locate the 1/2 x 1/2 x 3 in. long key (2) into shaft keyway.

4. Sub-assemble loosely the sprocket (3), split tapered bushing (4), 3/8 x 1/2 x 1 in. long key (5) and the three 3/8 x 1-1/4 in. bolts (6).

5. Slide sub-assembly over shaft and push shaft through bearing.

6. Install a lock collar over both ends of shaft against bearings.

NOTE: Allow approximately 1/4 in. (6mm) of shaft to protrude beyond lock collar as illustrated.

7. Tighten lock collar in direction of travel using a hammer and drift punch and secure set screws.

8. Locate and maintain the sprocket 2-1/8 in. (54mm) from inside of chain housing while evenly tightening the three bolts.

9. Refer to Assembly Manual for further assembly instructions.

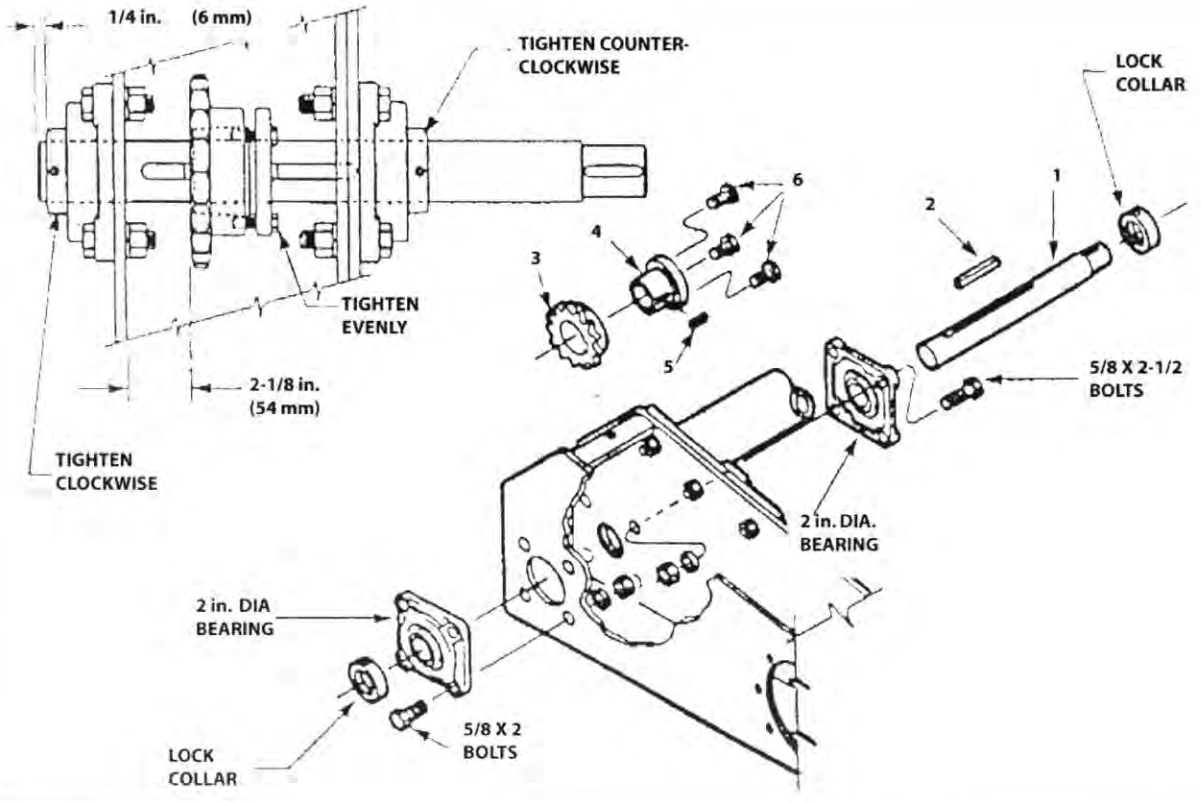

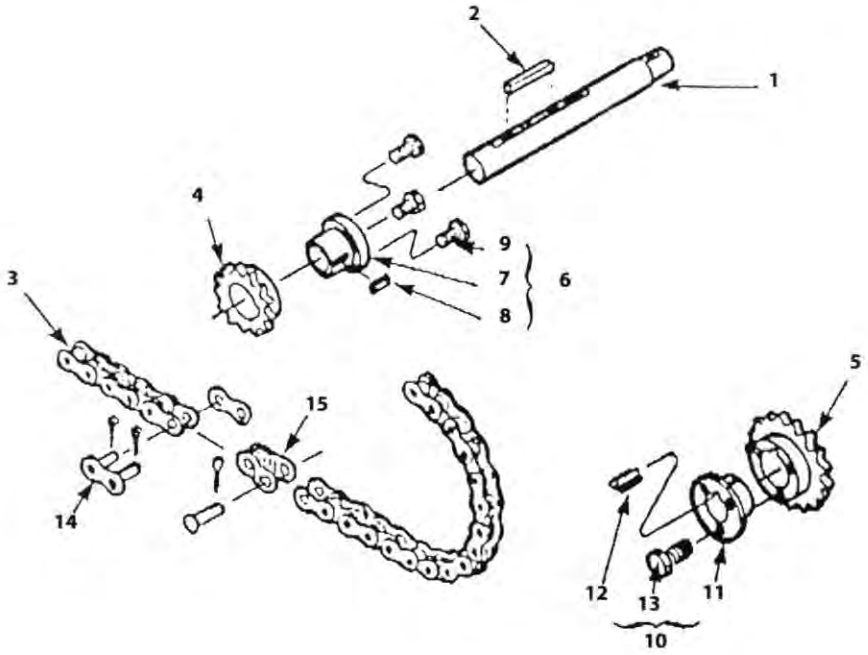

ITEM	PART No.	DESCRIPTION	QTY
1	305166	Shaft – 50.8 x 490mm – 2 Keyways	1
2	119117	Key – 1/2 x 1/2 x 3 in. long	1
3	120013	Chain, Roller #100 – 55 Link	1
4	122030	Sprocket – 100 Q14 – Tapered Bore	1
5	122021	Sprocket – 100 Q17 – Tapered Bore	1
6	122031	Kit, split tapered bushing – 2 in. dia. Consists of Items 7, 8 & 9	1
7	--	Busing, Split Tapered	1
8	--	Key – 3/8 x 1/2 x 1 in. long	1
9	118129	Bolt, Hex – 3/8 x 1/2 x 1 in. long	3
10	122021	Kit, Split Tapered Bushing 2-7/16 in. dia Consists of Items 11, 12 & 13	1
11	--	Bushing, Split Tapered	1
12	122020	Key, Stepped – 5/8 x 11/16 x 2-1/2 in.	1
13	118129	Bolt, Hex – 3/8 x 1-1/4 in. UNC, Gr5, Plated	3
14	120005	Connector Link #100	1
15	120006	Offset Link #100	1