Degelman

BEST IN THE FIELD -- WHERE IT COUNTS

Super Picker II

RP 7700

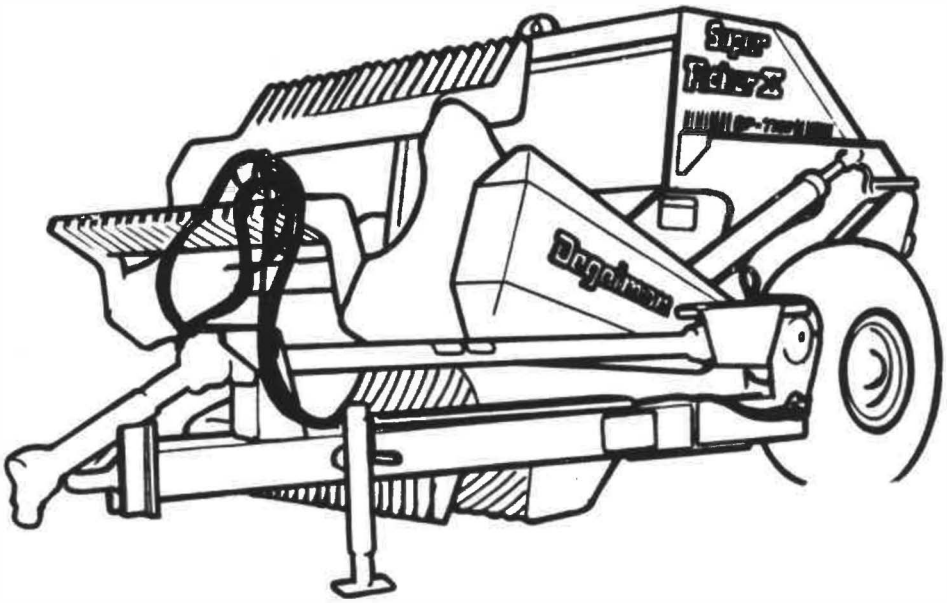

ERSATZTEILKATALOG

142300

Deutsche Übersetzung: Bassen Landmaschinen, 11/2026 – maßgeblich ist das englische Original von Degelman

SEPT 87

farm implements

INTRODUCTION

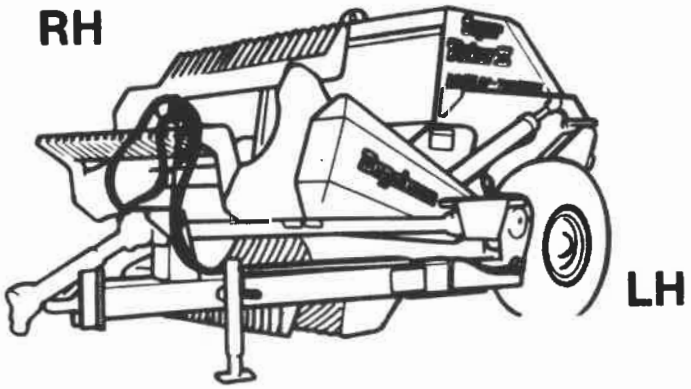

When ordering Replacement Parts be sure to include the machine MODEL NUMBER and SERIAL NUMBER along with the PART NUMBER, DESCRIPTION and QUANTITY of component required.

"Right Hand" and "Left Hand" sides are determined by facing in the direction of forward travel.

This manual contains both Imperial Units of measure (inches - in./feet - ft.) and SI Metric Units of measure (millimetres - mm/metres - m).

Record for handy reference the machine MODEL NUMBER, SERIAL NUMBER and DATE of PURCHASE to assist your Dealer in providing you with prompt and efficient service. For your convenience, a space is provided for recording this information.

Model No. _____

Serial No. _____

Date of Purchase _____

If any questions arise related to the Replacement Parts of this machine, please feel free to contact the manufacturer. Direct inquiries to:

DEGELMAN INDUSTRIES LTD.
P. O. Box 830
272 Industrial Drive
Regina, Saskatchewan
Canada
S4P 3B1
Phone: (306) 543-4447

DEGELMAN INDUSTRIES LTD. reserves the right to make alterations and/or improvements to its products at any time without incurring any obligations to make such changes to products previously manufactured.

PRINTED IN CANADA

CONTENTS

BASIC COMPONENTS

Frame Components	2
Hopper Box	3
Grille	4
Reel Shaft and Paddles	5
Hitch Pole	6
Hub and Spindle	7
Wheel Unit	8

DRIVE COMPONENTS

Chain Tightener and Spring	9
Chain	10
Bearing Units	11
Power Train Components	12
Gear Box 6.66:1 - Hub City	14
Drive Shaft c/w Torque Limiter - Weasler	16
Slider Shaft c/w Quick Disconnect - Weasler	17

HYDRAULICS

Hydraulics Layout	18
Hydraulic Cylinder 3 x 8 in. - DIL	20
Hydraulic Cylinder 3 1/2 x 34 in. - DIL	21
Hydraulics - Hose Clips, Hose Holder, Hose Shield & Hose Ties	22

SHIELDS and GUARDS

Safety Shields	23
Rock Guard Unit	24

MISCELLANEOUS

Publications	25
Decals	26

NOTES

FRAME COMPONENTS

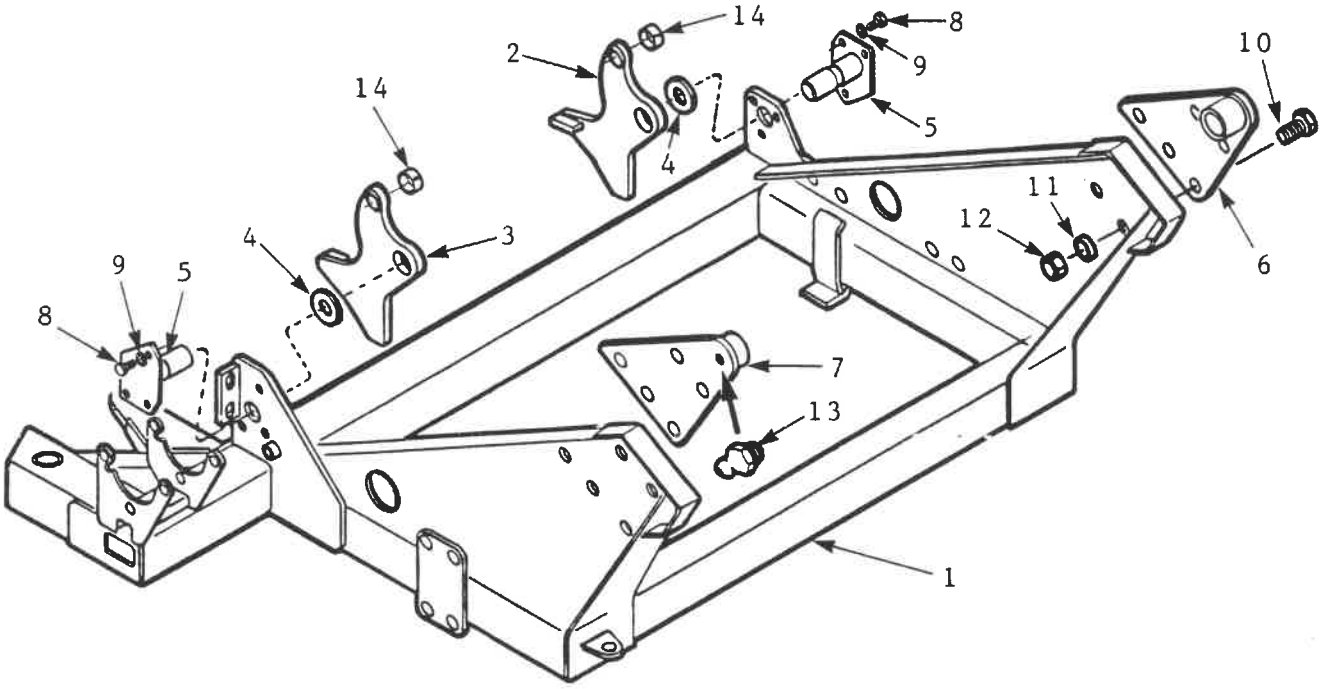

ITEM	PART No.	DESCRIPTION	QTY.
1	240292	Frame Assembly - RP/S3	1
2	240346	Flotation Assembly - RH - RP/S3	1
3	240344	Flotation Assembly - LH - RP/S3	1
4	240273	Washer, Flat - 90 ID x 140 OD x 4.5 mm thick	2
5	240408	Pin Assembly 72 dia. x 171 mm long (effective)	2
6	240311	Pivot, Box - RH - RP/S3	1
7	240313	Pivot, Box - LH - RP/S3	1
8	118186	Bolt, Hex 1/2 x 1 1/4 in. UNC, GR 8, Plated	6
9	118504	Washer, Lock 1/2 in. Plated	6
10	118026	Bolt, Hex 5/8 x 2 in. UNC, GR 5, Plated	10
11	118508	Washer, Lock 5/8 in. Plated	10
12	118407	Nut, Hex 5/8 in. UNC, GR 5, Plated	10
13	118335	Grease Fitting - 1/4-28 AMNF Thread-Straight	a/r
14	117111	Bushing 1 1/2 OD x 1/8 Wall x 1 in. long - Spring Steel	2

HOPPER BOX

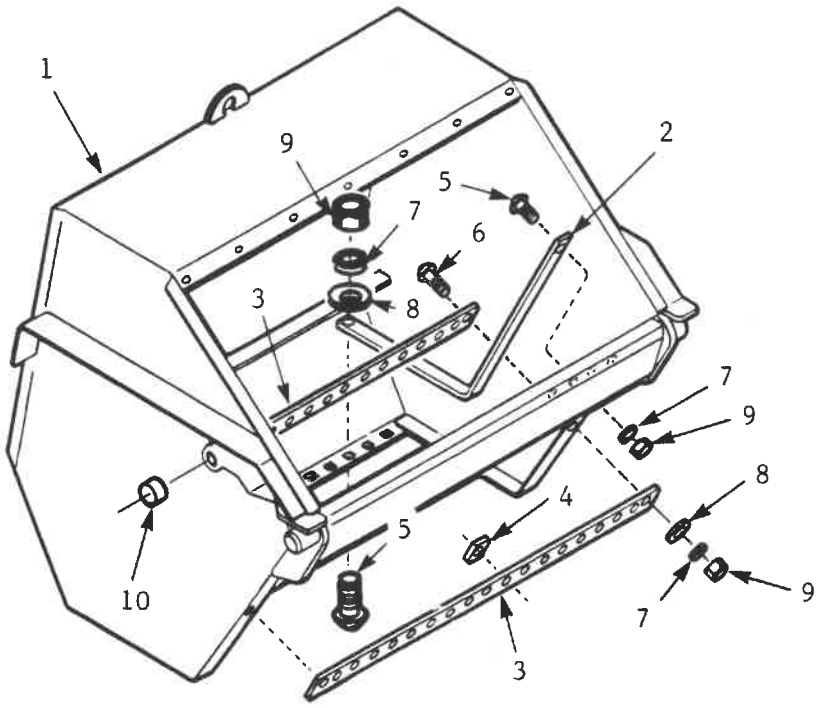

ITEM	PART No.	DESCRIPTION	QTY.
1	240359	Box, Hopper - RP/S3	1
2	240252	Strap, Box - RP/S2 - 9 x 50 x 1478 mm long	16
3	240251	Bar, Bolt - 19 Holes (64 & 95 mm hole centres)	2
4	240156	Bar, Spacer - 1 Hole - 9 x 42 x 50 mm long	17
5	118218	Bolt, Carriage 1/2 x 1 1/2 in. UNC, GR 5, Plated	32
6	118219	Bolt, Carriage 1/2 x 2 in. UNC, GR 5, Plated	19
7	118504	Washer, Lock 1/2 in. Plated	51
8	118512	Washer, Flat 1/2 in. Plated	35
9	118405	Nut, Hex 1/2 in. UNC, GR 5, Plated	51
10	117111	Bushing 1 1/2 OD x 1/8 Wall x 1 in. long - Spring Steel	2

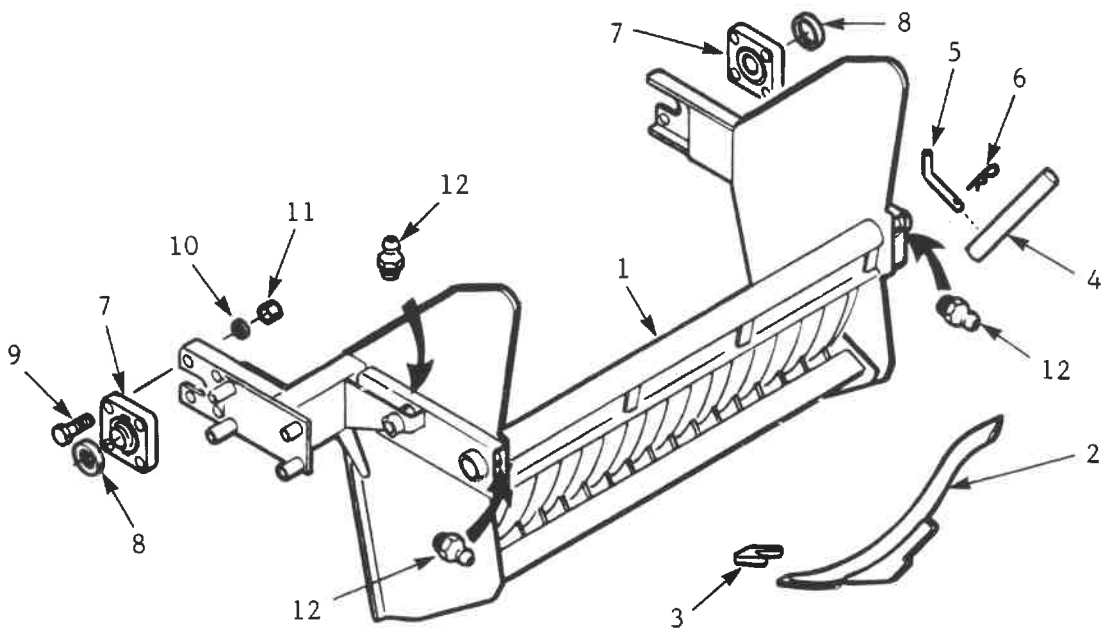

ITEM	PART No.	DESCRIPTION	QTY.
1	240342	Grille Assembly - RP/S3	1
2	240358	Tooth Assembly - Grille - RP/S3	a/r
3	240395	Tooth, Grille Tip	a/r
4	240278	Shaft, Transport Lock - RP/S2 - Red	1
5	240277	Pin - 20 x 54 mm long (effective) - Red	1
6	118830	Pin, Hair 4.5 x 83 mm - Plated	1
7	117112	Bearing Unit, Flange - 4 Hole - 2 7/16 in. - heavy duty	2
8	117022	Collar, Lock 2 7/16 in. Bearing	2
9	118030	Bolt, Hex - 5/8 x 3 in. UNC, GR 5, Plated	8
10	118508	Washer, Lock 5/8 in. Plated	8
11	118407	Nut, Hex 5/8 in. UNC, GR 5, Plated	8
12	118335	Grease Fitting 1/4 - 28 AMNF Thread-Straight	3

REEL SHAFT and PADDLES

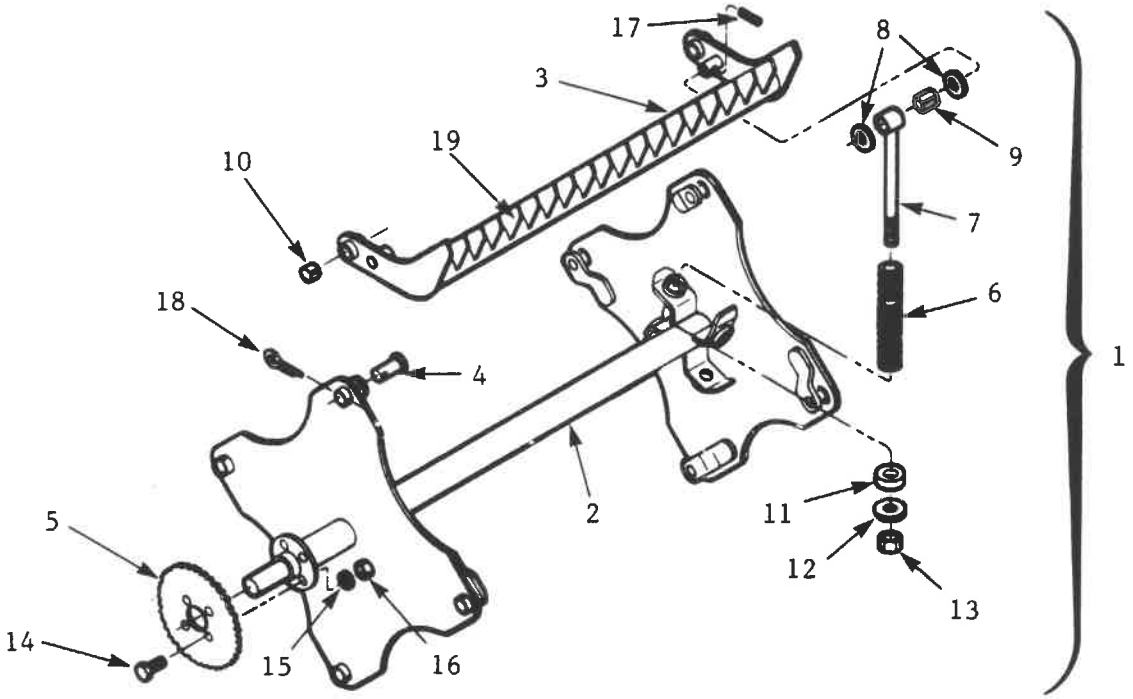

ITEM	PART No.	DESCRIPTION	QTY.
1	240326	Shaft/Paddle Assembly -RP/S3	1
2	240317	Shaft, Reel Assembly - RP/S3	1
3	240332	Paddle Assembly - RP/S3	4
4	240288	Pin Assembly 38.1 x 77 mm (effective) - Coated	8
5	122037	Sprocket 100A48 x 140 mm Bore	1
6	143022	Spring, Compression - 420 mm x 20 Coils	8
7	240316	Bolt, Eye - Reel 1 1/4 in. UNC	8
8	240286	Bushing, Machinery - 1 1/2 in. Nominal - Plated	16
9	117108	Bushing 1 3/4 OD x 1/8 Wall x 2 1/2 in. - Spring Steel	8
10	117103	Bushing 1 3/4 OD x 1/8 Wall x 1 1/2 in. - Spring Steel	8
11	240018	Bumper Pad 33 x 75 x 20 mm - Urethane	8
12	240327	Washer, Flat 33 x 90 x 12 mm	8
13	118445	Nut, Lock 1 1/4 in. UNC, GR 5, Plated	8
14	118047	Bolt, Hex 3/4 x 2 1/2 in. UNC, GR 5, Plated	4
15	118509	Washer, Lock 3/4 in. Plated	4
16	118410	Nut, Hex 3/4 in. UNC, GR 5, Plated	4
17	118845	Pin, Roll 5/16 x 2 1/2 in.	8
18	118880	Pin, Cotter 1/2 x 3 in.	8
19	240338	Tooth, Paddle - RP/S3 - Hard Surfaced	a/r
		PREVIOUS DESIGN	
5	122034	Sprocket 100A58 x 140 mm Bore	1

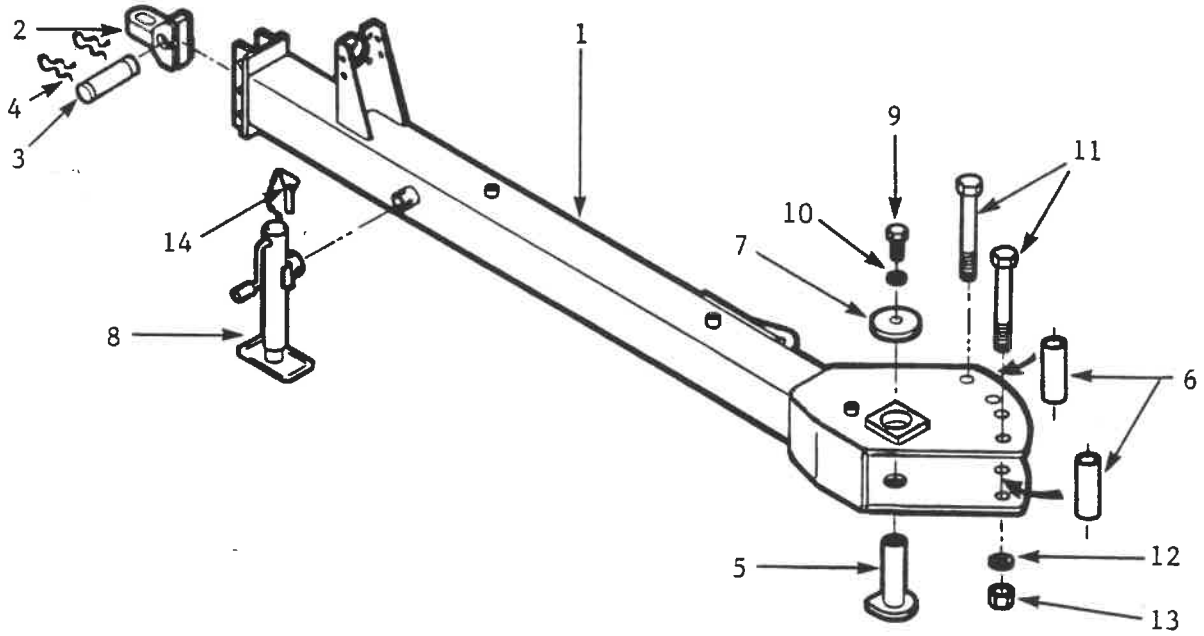

ITEM	PART No.	DESCRIPTION	QTY.
1	240357	Pole, Hitch - RP/S3 c/w Hitch Lug	1
2	240208	Lug, Hitch Assembly	1
3	121944	Pin 25.4 x 110 mm (effective) Plated-N/D	1
4	118882	Pin, Hair 3/16 x 2 3/4 in. Plated-N/D	2
5	240042	Pin Assembly - 52 x 205 mm long (effective)	1
6	240094	Bushing 39.7 OD x 6.4 Wall x 154 mm long	2
7	229030	Washer, Flat 20 ID x 102 OD x 9 mm - Black	1
8	132005	Jack, Side Wind SWS-150-DTSF	1
9	118040	Bolt, Hex 3/4 x 1 1/2 in. UNC, GR 5, Plated	1
10	118509	Washer, Lock 3/4 in. Plated	1
11	118113	Bolt, Hex 1 x 9 in. UNC, GR 5, Plated	2
12	118510	Washer, Lock 1 in. Plated	2
13	118412	Nut, Hex 1 in. UNC, GR 5, Plated	2
14	118879	Pin, Hitch Jack 9/16 in. dia.	1

HUB and SPINDLE

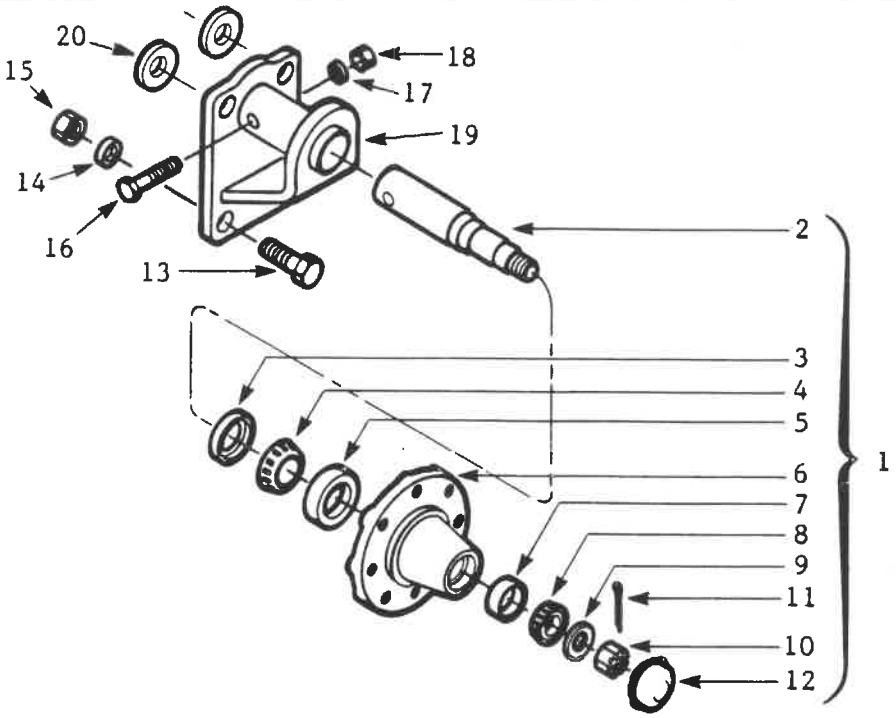

ITEM	PART No.	DESCRIPTION	QTY.
1	240387	Hub/Spindle Assembly - H812B - RP/S3	1
2	131306	Spindle - S812B - 2.5 x 15 1/2 in. - CRS	1
3	131184	Seal, Dust - CR#25100 - 2 1/2 in. ID	1
4	131295	Cone, Bearing - #3767 - 2.063 in. ID	1
5	131180	Cup, Bearing - #3720 - 3.672 in. OD	1
6	131094	Hub - H812 c/w Cups	1
7	131071	Cup, Bearing #2720 - 3.000 in. OD	1
8	131294	Cone, Bearing #2789 - 1.563 in. ID	1
9	118553	Washer, Flat 1 1/16 x 2 x 3/16 in.	1
10	118423	Nut, Slotted 1 in, UNS, GR 5	1
11	118835	Pin, Cotter 3/16 x 1 1/2 in. long	1
12	131093	Cap, Hub - H812 Hub	1
13	118050	Bolt, Hex 3/4 x 3 in. UNC, GR 5, Plated	4
14	118509	Washer, Lock 3/4 in. Plated	4
15	118410	Nut, Hex 3/4 in. UNC, GR 5, Plated	4
16	118126	Bolt, Hex 1/2 x 4 in. UNC, GR 5, Plated	1
17	118504	Washer, Lock 1/2 in. Plated	1
18	118405	Nut, Hex 1/2 in. UNC, GR 5, Plated	1
19	240015	Holder, Axle - RP/S2 & S3	1
20	118516	Washer, Flat 3/4 in. Plated	2

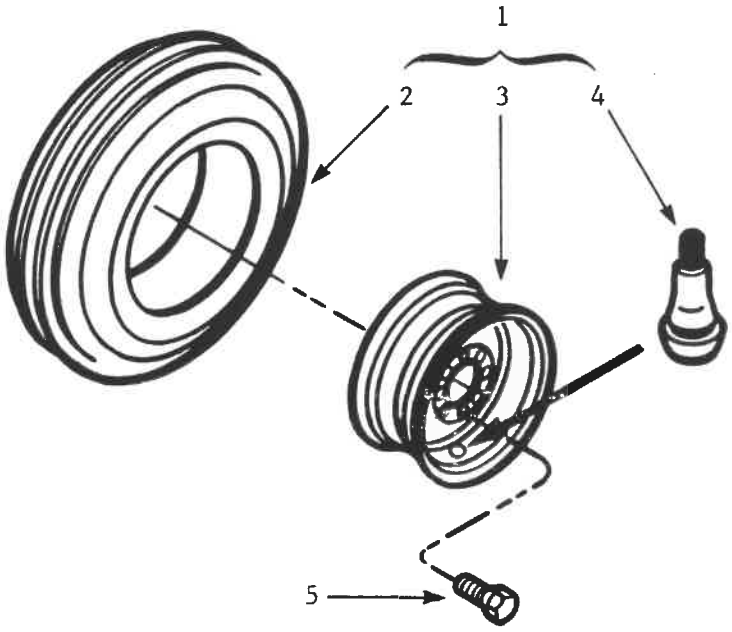

ITEM	PART No.	DESCRIPTION	QTY.
1	240386	Wheel Assembly - 16.5L x 16.1 - 6 Ply - 3/8 in. Positive	2
2	127011	Tire, Tubeless - 16.5L x 16.1 - 6 Ply	1
3	130999	Rim, Wheel W11C - 16.1 - 8 Bolt - 3/8 in. Positive	1
4	127006	Valve Stem - TR415	1
5	118313	Bolt, Wheel 9/16 x 1 1/16 in. UNF, GR 5, Plated	8

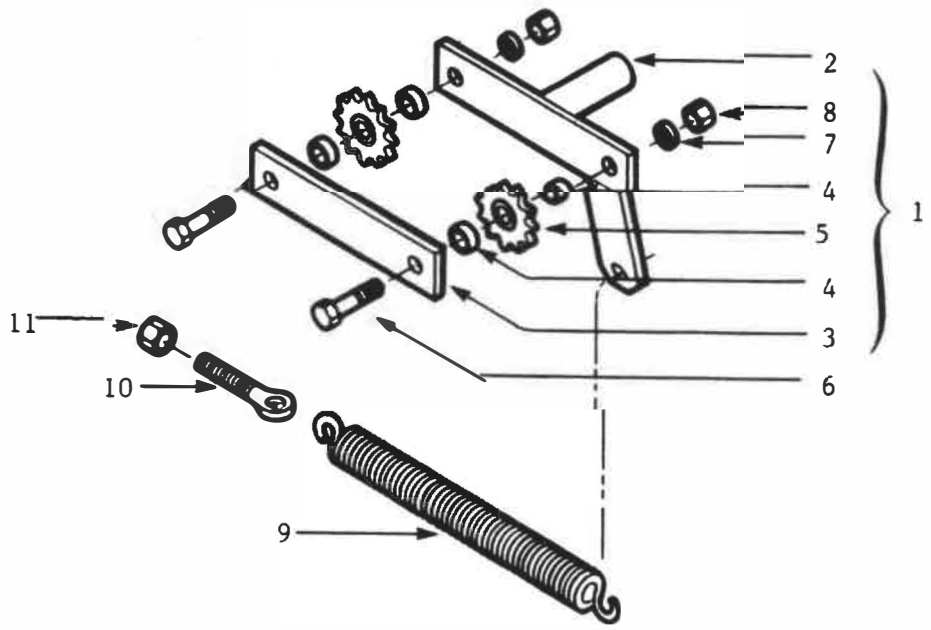

POS.	TEILE-NR.	BESCHREIBUNG	MENGE
1	240349	Kettenspanner, komplett RP/S3	1
2	240351	Arm, Kettenspanner - RP/S3	1
3	240353	Schraubleiste - 2 Loch - 204 mm Lochabstand	1
4	241778	Buchse 1-1/2 in. OD x 3/4 in. lang	4
5	122006	Kettenrad, Spannrad l00All mit Lager - beschichtet	2
6	118116	Schraube, Sechskant 1 x 4 1/2 in. UNC, GR 5, verzinkt	2
7	118510	Federring 1 in. verzinkt	2
8	118412	Mutter, Sechskant 1 in. UNC, GR 5, verzinkt	2
9	143003	Zugfeder - 49 Windungen	1
10	118240	Augenschraube 5/8 x 5 1/4 in. UNC, GR 5, verzinkt	1
11	118447	Sicherungsmutter 5/8 UNC, GR C, verzinkt - Uni-Torque	1

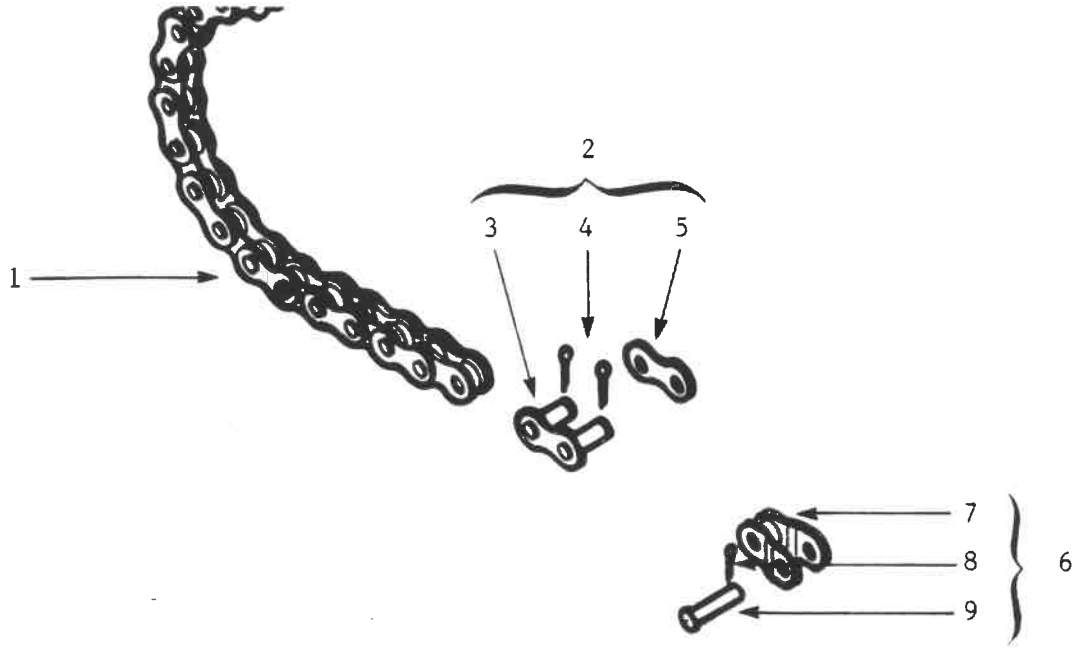

ITEM	PART No.	DESCRIPTION	QTY.
1	120025	Chain, Roller #100 - 103 Link (for 540 PTO)	1
	120024	Chain, Roller #100 - 97 Link (for 1000 PTO)	
2	120005	Link, Connector - Kit	1
3	---	Link, Connector #100	1
4	---	Pin, Cotter	2
5	---	Plate, Link	1
6	120006	Link, Offset - Kit	1
7	---	Link, Offest #100	1
8	---	Pin, Cotter	1
9	---	Pin	1

FRONT DRIVE LINE BEARING

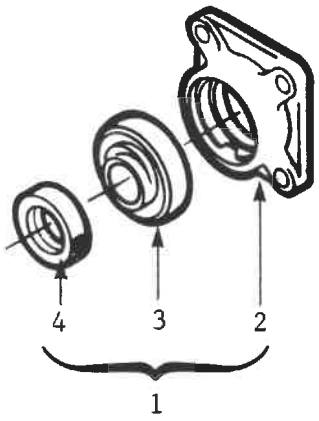

REEL SHAFT BEARING

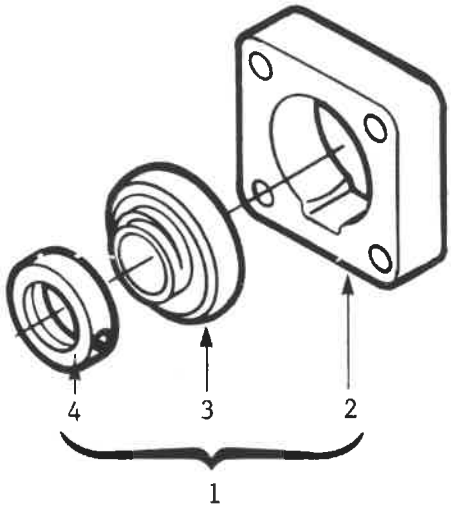

GEAR BOX SHAFT BEARING

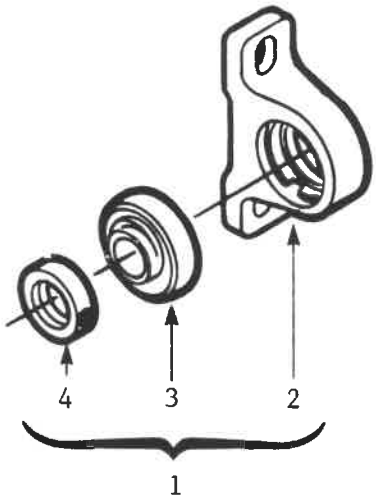

ITEM	PART No.	DESCRIPTION	QTY.
		FRONT DRIVE LINE BEARING	
1	117089	Bearing Unit, Flanged - 4 Hole - 1 3/8 in.	1
2	117091	Casting Flange - 4 Hole - 1 3/8 in. Bearing	1
3	117090	Insert, Bearing - 1 3/8 in.	1
4	117024	Collar, Lock - 1 3/8 in. Bearing (shipped by not required)	1
		REEL SHAFT BEARING	
1	117112	Bearing Unit, Flanged - 4 Hole - 2 7/16 in.	2
2	240325	Housing, Bearing - 38 Plate - 4 hole - 2 7/16 in.	1
3	117106	Insert, Bearing - 2 7/16 in.	1
4	117022	Collar, Lock - 2 7/16 in. Bearing	1
		GEAR BOX SHAFT BEARING	
1	117023	Bearing Unit, Pillow Block - 1 3/8 in.	1
2	117010	Casting, Pillow Block - 1 3/8 in. Bearing	1
3	117090	Insert, Bearing - 1 3/8 in.	1
4	117024	Collar, Lock - 1 3/8 in. Bearing	1

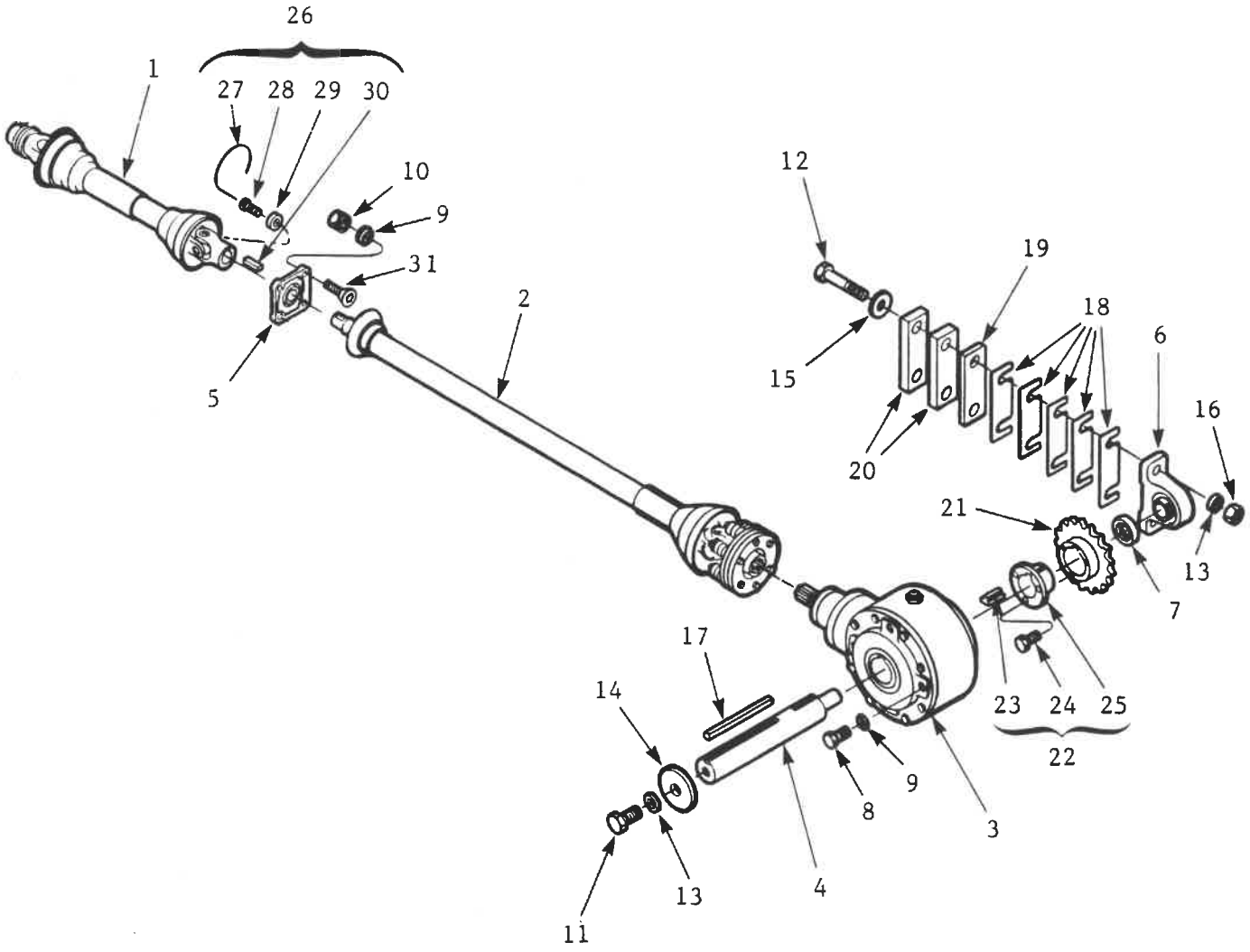
26
1
27
28
29
30
10
9
31
2
5
12
19
18
6
16
15
20
21
13
7
17
14
23
24
25
22
9
8
3
4
13
11

ITEM	PART No.	DESCRIPTION	QTY.
1	119265	Shaft, Slider - 28.1 in. (overall) - Weasler - 14 NW (21 Spline)	1
	119251	Shaft, Slider - 28.1 in. (overall) - Weasler - 14 NW (6 Spline)	
2	119287	Shaft, Slider - 83.12 - 87.12 in. c/w Torq. Lim.-Wslr. - 35 NW	1
3	119177	Gear Box - 6.66:1 Hub City - M920 (Splined)	1
4	240348	Shaft, Gear Box - 61.9 x 500 mm - Coated	1
5	117089	Bearing Unit, Flange - 4 Hole 1 3/8 in.	1
6	117023	Bearing Unit, Pillow Block - 1 3/8 in. c/w Lock Collar	1
7	117024	Collar, Lock 1 3/8 in. Bearing	1
8	118008	Bolt, Hex 1/2 x 1 in. UNC, GR 5, Plated	6
9	118504	Washer, Lock 1/2 in. Plated	a/r
10	118405	Nut, Hex 1/2 UNC, GR 5, Plated	4
11	118024	Bolt, Hex 5/8 x 1 1/2 in. UNC, GR 5, Plated	1
12	118094	Bolt, Hex 5/8 x 4 in. UNC, GR 5, Plated	2
13	118508	Washer, Lock 5/8 in. Plated	a/r
14	229030	Washer, Flat 20 x 102 x 9 mm - Black	1
15	118514	Washer, Flat 5/8 in. Plated	2
16	118407	Nut, Hex 5/8 in. UNC, GR 5, Plated	2
17	119032	Key 15.9 x 15.9 x 200 mm	1
18	240309	Shim - 2 mm - 2 Slots - 128 mm hole centres	5
19	240307	Bar, Bolt - 2 Hole - 128 mm hole centres (6mm thick)	1
20	240308	Bar, Bolt - 2 Hole - 128 mm hole centres (12 mm thick)	2
21	122032	Sprocket 100Q25 - Tapered Bore (540 PTO)	1
	122030	Sprocket 100Q14 - Tapered Bore (1000 PTO)	
22	122021	Kit, Split Taper Bushing - 2 7/16 in.	1
23	---	Key - Stepped	1
24	118129	Bolt, Hex 3/8 x 1 1/4 in. UNC, GR 5, Plated	3
25	---	Bushing, Tapered	1
26	119340	Bag, Hardware (supplied by Weasler)	1
27	---	Tie Wire	1
28	---	Bolt, Hex - Drilled Head 1/2 x 1 1/4 in. UNF, GR 2, Plated	1
29	---	Washer, Flat 1 1/2 OD x 33/64 ID x 1/4 in. thick	1
30	---	Key 3/8 x 5/16 x 1 3/8 in. long	1
31	118341	Bolt, Countersunk 1/2 x 1 1/2 in., UNC - Allen	4

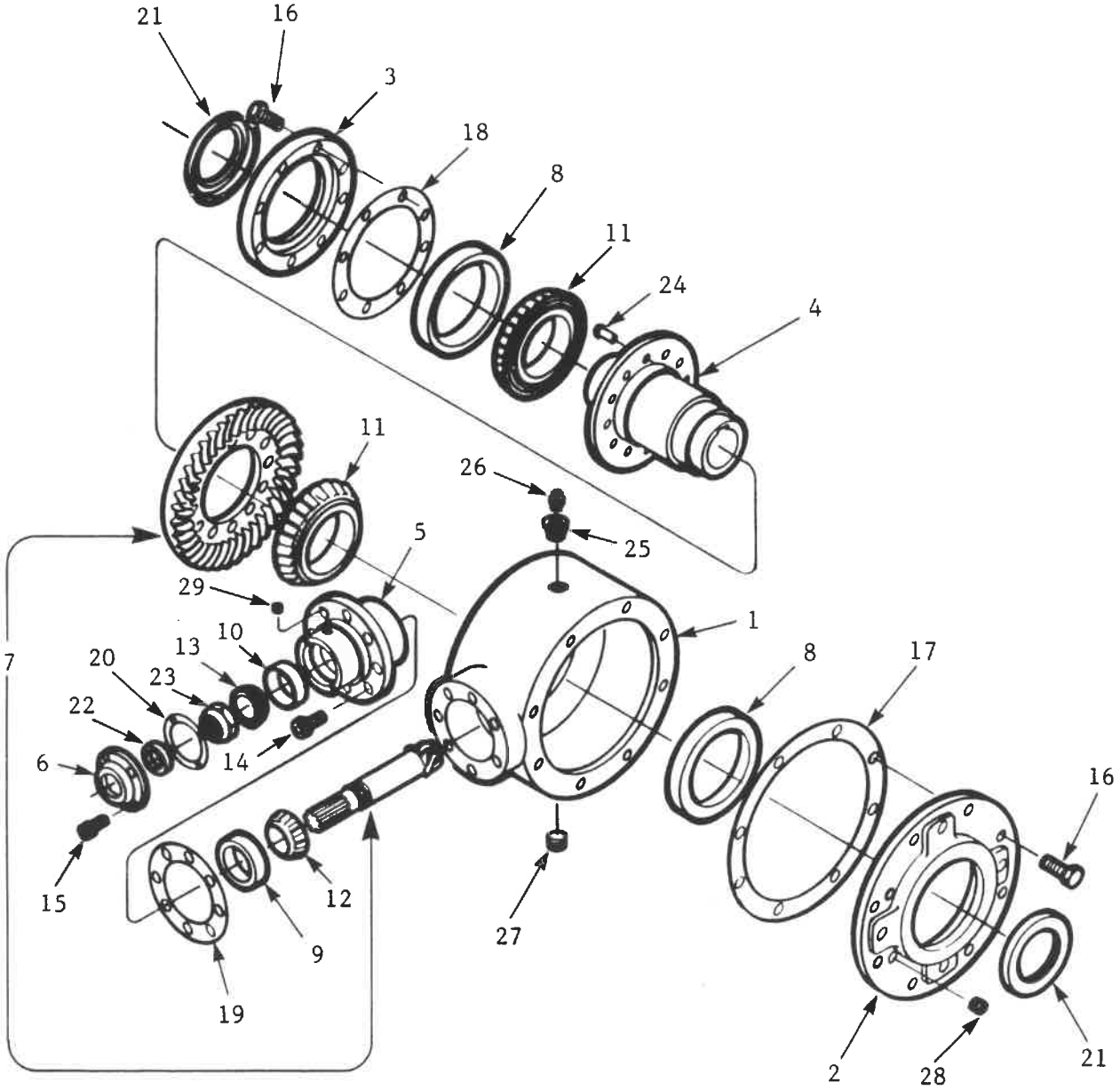
21
16
3
18
8
11
24
4
11
26
25
5
29
1
7
10
13
20
23
22
6
14
8
17
16
15
12
9
27
19
2
28
21

GEAR BOX 6.66:1 - HUB CITY

ITEM	PART No.	DESCRIPTION	QTY.
-	119177	Gear Box 6.66:1 - Hub City - M920 - 1 3/8 in. Splined Input	1
1	119051	Housing, Gear Box 6.66:1 - Hub City	1
2	119052	Cap, Output 6.66:1 - Large - Hub City	1
3	119053	Cap, Output 6.66:1 - Small - Hub City	1
4	119054	Hub, Ring Gear - 2 7/16 in. ID - Hub City	1
5	119178	Cap, Input 6.66:1 - Hub City - 1 3/8 in. Splined Input	1
6	119179	Carrier, Pinion Seal - Hub City - 1 3/8 in. Splined Input	1
7	119180	Gear/Pinion Set 6.66:1 - Hub City - 1 3/8 in. Splined Input	1
8	119055	Cup, Bearing #42584 - 5.844 in. OD	2
9	119181	Cup, Bearing (Hub City #8-32-20-58-051)	1
10	119182	Cup, Bearing (Hub City #8-32-20-58-180)	1
11	119056	Cone, Bearing #42375 - 3.750 in. ID	2
12	119183	Cone, Bearing (Hub City #8-32-20-68-051)	1
13	119184	Cone, Bearing (Hub City #8-32-20-68-001)	1
14	---	Capscrew, Socket 3/8 x 1 1/4 in. UNC	7
15	119070	Setscrew #10 x 3/4 in. UNF - Allen	4
16	118129	Bolt, Hex 3/8 x 1 1/4 in. UNC, Gr 5, Plated	16
-	119186	Kit, Repair #M920 - 1 3/8 in. Spline Input - Hub City	1
		Consists of:	
17	---	Gasket	10
18	---	Gasket	5
19	---	Gasket	5
20	---	Gasket	1
21	119061	Seal, Dust - CR#36361 - 3.625 in. ID	2
22	119185	Seal, Dust (Hub City #8-74-21-25-017)	1
23	---	Nut, Lock 1 1/2 - 16 Thread (Hub City #8-47-16-14-041)	1
24	---	Rivet 3/8 x 1 1/4 in. (Hub City #8-47-17-00-002)	12
25	119021	Reducer 1/8 NPT(FM) x 1/2 NPT(M)	1
26	119020	Vent, Pressure Relief - 1/8 NPT(M)	1
27	119016	Plug, Port 1/2 NPT(M) - Allen	1
28	119071	Plug, Port 1/4 NPT(M) - Allen	2
29	---	Plug, Port 1/8 NPT(M) - Allen	2

NOTE: Item #7 is a matched Gear and Pinion Set and cannot be purchased seperately

SLIDING TYPE
Serial #19129 & Up

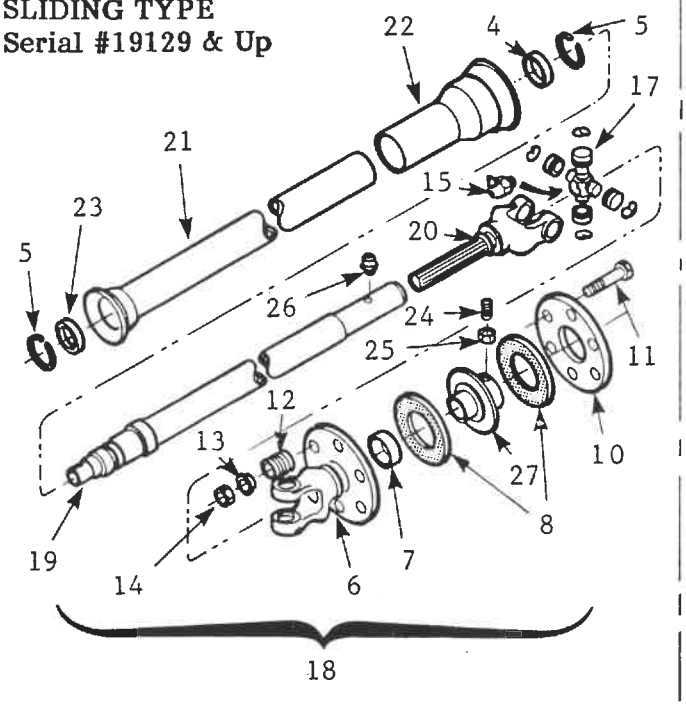

SOLID TYPE
Prior to Serial #19129

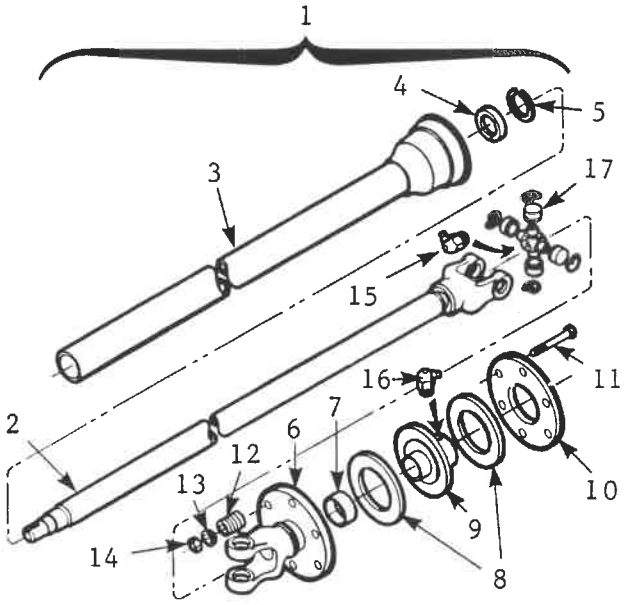

ITEM	PART No.	DESCRIPTION	QTY.
1	119275	Shaft, Drive (Solid) - 85.1 in. c/w Torq. Lim. - Wslr. - 35 NW	1
2	119276	Yoke/Shaft - 80.19 in. long - Weasler - 35 NW	1
3	119277	Shield, Outer - PVC - 76.5 in. Weasler - 35 NW (c/w #4 & #5)	1
4	119260	Bearing, Shield Support - Weasler - (#4N20)	1
5	119261	Ring, Retainer - Weasler - 14 NW/35 NW	1
6	119278	Yoke/Plate Assembly - Torque Limiter - Weasler - 35 NW	1
7	—	Bushing (not sold seperate)	1
8	119280	Disc, Friction - Torque Limiter - Weasler - 35 NW	2
9	119281	Plate, Hub Assy - Torq Lim - Weasler - 35 NW (greaseable)	1
10	119282	Plate, Pressure - Torque Limiter - Weasler - 35 NW	1
11	118139	Bolt, Hex 3/8 x 4 in. UNC, GR 5, Plated	6
12	119283	Spring, Compression - Torque Limiter - Weasler - 35 NW	6
13	119284	Guide, Spring - Torque Limiter - Weasler - 35 NW	6
14	118417	Nut, Lock 3/8 in. UNC, GR 5, Plated	6
15	119262	Grease Fitting - 1/8 NPT - 75°	1
16	118333	Grease Fitting - 1/8 NPT - 45°	1
17	119129	Kit, Cross and Bearing - Hayes 1340	1
18	119287	Shaft, Drive (Slider) 83.12-87.12 in. c/w Torq. Lim.-Wslr.-35 NW	1
19	119288	Shaft/Tube Assembly - 74.12 in. - Weasler - 35 NW	1
20	119289	Yoke/Spline Assembly - Weasler - 35 NW	1
21	119290	Shield, Inner - PVC 70.5 in. Weasler - 35 NW (c/w #5 & #23)	1
22	119291	Shield, Outer - PVC 11.62 in. Weasler - 35 NW (c/w #4 & #5)	1
23	119292	Bearing, Shield Support - Weasler (#4P16)	1
24	118316	Setscrew 3/8 in. UNC - Allen	2
25	118403	Nut, Hex 3/8 in. UNC, GR 5, Plated	2
26	118335	Grease Fitting - 1/4 - 18 AMNF Thread - Straight	1
27	119293	Plate, Hub Assy - Torq Lim - Wealser - 35 NW (Set Screw Type)	1

SLIDER SHAFT c/w QUICK DISCONNECT - WEASLER

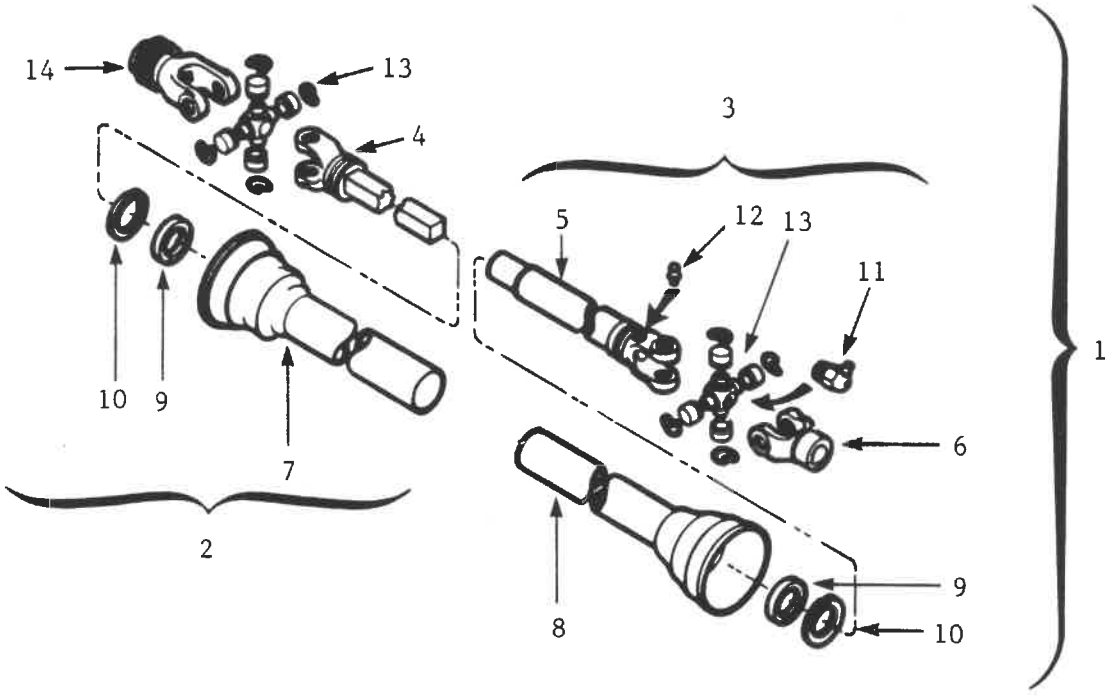

ITEM	PART No.	DESCRIPTION	QTY.
1	119265	Shaft, Slider 28.1 in. (overall) - Weasler - 14 NW (21 Spline Q.D.)	1
	119251	Shaft, Slider 28.1 in. (overall) - Weasler - 14 NW (6 Spline Q.D.)	
2	119266	Shaft, Half - Bar - 28 in. - Weasler - 14 NW (21 Spline Q.D.)	1
	119252	Shaft, Half - Bar - 28 in. - Weasler - 14 NW (6 Spline Q.D.)	
3	119253	Shaft, Half - Tube - 28 in. - Weasler - 14 NW	1
4	119254	Yoke/Bar - 17.38 in. long - Weasler - 14 NW	1
5	119255	Yoke/Tube - 16.13 in. long - Weasler - 14 NW	1
6	119257	Yoke 1 5/16 in. Bore - Weasler - 14 NW	1
7	119258	Shield, Outer - PVC - 16 in. - Weasler (c/w #9 and #10)	1
8	119259	Shield, Inner - PVC - 16 in. - Weasler (c/w #9 and #10)	1
9	119260	Bearing, Shield Support - Weasler - 14 NW/35 NW	2
10	119261	Ring, Retainer - Weasler - 14 NW/35 NW	2
11	119262	Grease Fitting - 1/8 NPT - 75°	2
12	118335	Grease Fitting - 1/4-28 AMNF Thread-Straight	1
13	119118	Kit, Cross and Bearing - Hayes 1240	2
14	119256	Yoke 1 3/8 in. Q.D. - 6 Spline - Weasler - 14 NW	1
	119267	Yoke 1 3/8 in. Q.D. - 21 Spline - Weasler - 14 NW	

Hitch Pole Hydraulics

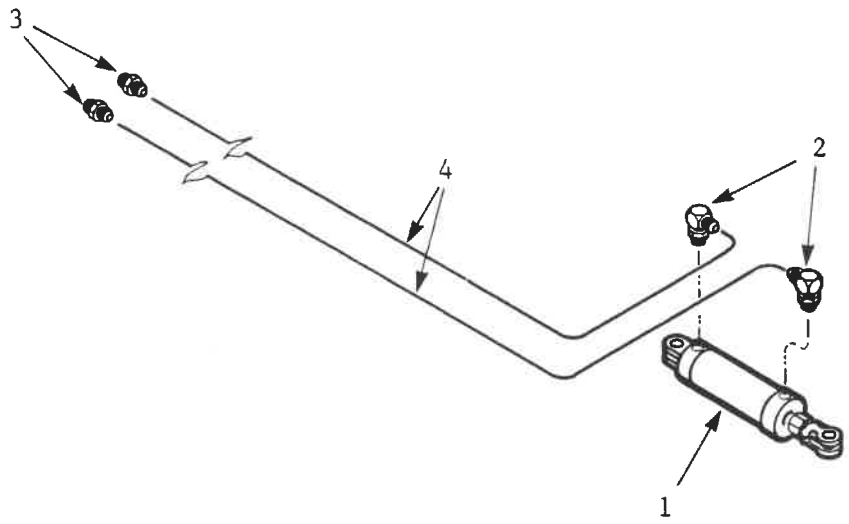

Hopper Box Hydraulics

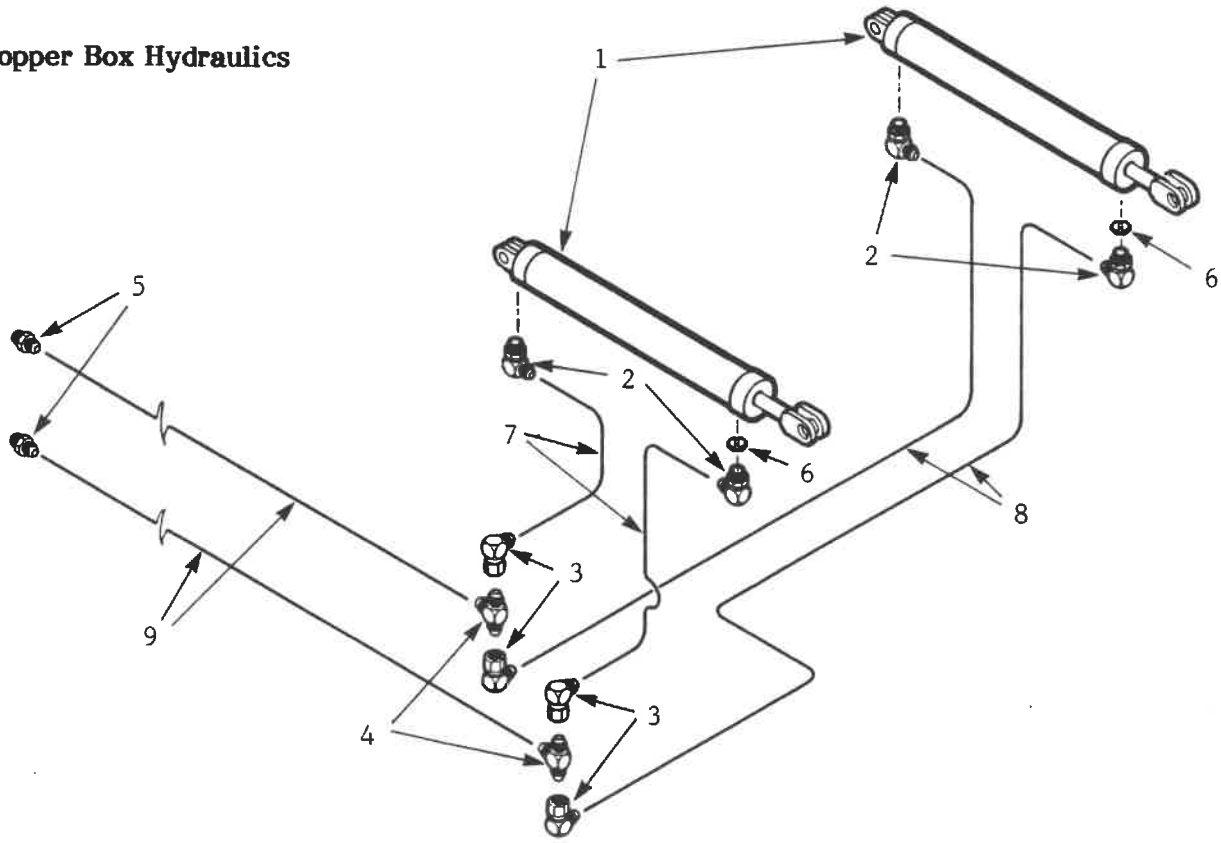

ITEM	PART No.	DESCRIPTION	QTY.
1	121397	Cylinder, Hydraulic - 3 x 8 in. c/w Pins - DIL	1
2	141504	Elbow, 90° 3/4 JIC(M) x 3/4 ORB(M)	2
3	141514	Nipple 1/2 NPT(M) x 3/4 JIC(M)	2
4	126587	Hose 3/8 x 154 in. 2WB - 3/4 JIC(F-SW)	2
		NOTE: Rebuilt Hydraulic Cylinders may be available	
1	121783	Cylinder, Hydraulic - 3 x 8 in. c/w Pins - DIL "**Rebuilt**"	1

ITEM	PART No.	DESCRIPTION	QTY.
1	121846	Cylinder, Hydraulic - 3 1/2 x 34 in. - DIL	2
2	141504	Elbow, 90° 3/4 JIC(M) x 3/4 ORB(M)	4
3	141518	Elbow, 90° 3/4 JIC(M) x 3/4 JIC(F-SW)	4
4	141501	Tee 3/4 JIC(M) x (M) x (M)	2
5	141514	Nipple 1/2 NPT(M) x 3/4 JIC(M)	2
6	141506	Orifice Plate - .0700 in. ID - Hexagon	2
7	126577	Hose 3/8 x 70 in. 2WB - 3/4 JIC(F-SW)	2
8	126587	Hose 3/8 x 154 in. 2WB - 3/4 JIC(F-SW)	2
9	126574	Hose 3/8 x 174 in. 2WB - 3/4 JIC(F-SW)	2
		NOTE: Rebuilt Hydraulic Cylinders may be available	
1	121853	Cylinder, Hydraulic - 3 1/2 x 34 in. c/w Pins - DIL "**Rebuilt**"	2

HYDRAULIC CYLINDER 3 x 8 in. STROKE - DIL

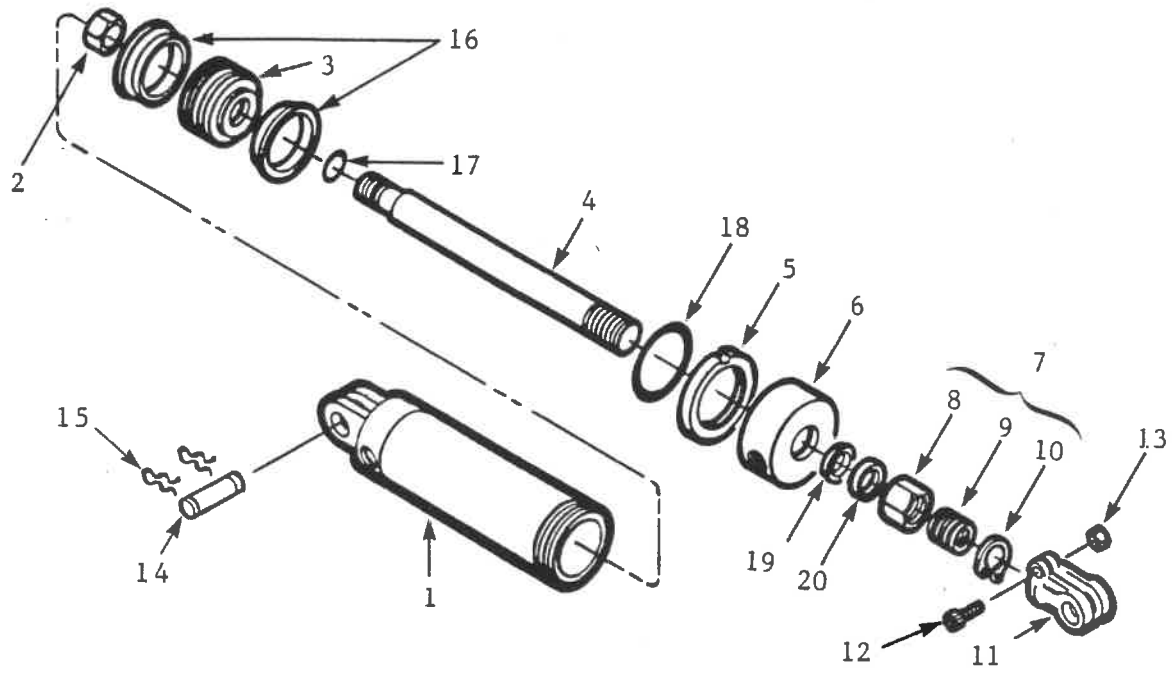

ITEM	PART No.	DESCRIPTION	QTY.
	121397	Cylinder, Hydraulic - 3 x 8 in. - DIL	a/r
1	121628	Barrel Assembly - 3 x 8 in. - DIL	1
2	118441	Nut, Lock 7/8 in. UNF, GR 5, Plated, Uni-torque	1
3	121606	Piston - 3 in. Cylinder (U-Cup Type) - DIL	1
4	121618	Rod, Cylinder - 3 x 8 in. - DIL	1
5	121746	Ring, Lock - 3 in. Cylinder - DIL	1
6	121630	Cap, Open - 3 in. Cylinder, 1 1/4 in. Rod - DIL	1
7	121642	Depth Control Assembly - DIL Cylinder - Plated	1
8	—	Nut, Depth Control - DIL	1
9	—	Sleeve, Depth Control - DIL	1
10	—	Snap Ring	1
11	121631	Clevis, Rod 1 1/4-12 UNF - DIL	1
12	118311	Capscrew 3/8 x 1 3/4 in. - Allen	1
13	118403	Nut, Hex 3/8 in. UNC, GR 5, Plated	1
14	121941	Pin 25.4 x 73 mm long (effective) Plated-N/D	2
15	118882	Pin, Hair 3/16 x 2 3/4 in. Plated-N/D	4
16	—	Seal, U-Cup	2
17	—	Seal, O-Ring	1
18	—	Seal, O-Ring	1
19	—	Seal, U-Cup	1
20	—	Seal, Rod Wiper	1
	121719	Kit, Seal - 3 in. Cylinder 1 1/4 in. Rod - DIL	1
		NOTE: Rebuilt Units may be available	
	121783	Cylinder, Hydraulic - 3 x 8 in. c/w Pins - DIL **"Rebuilt"**	a/r

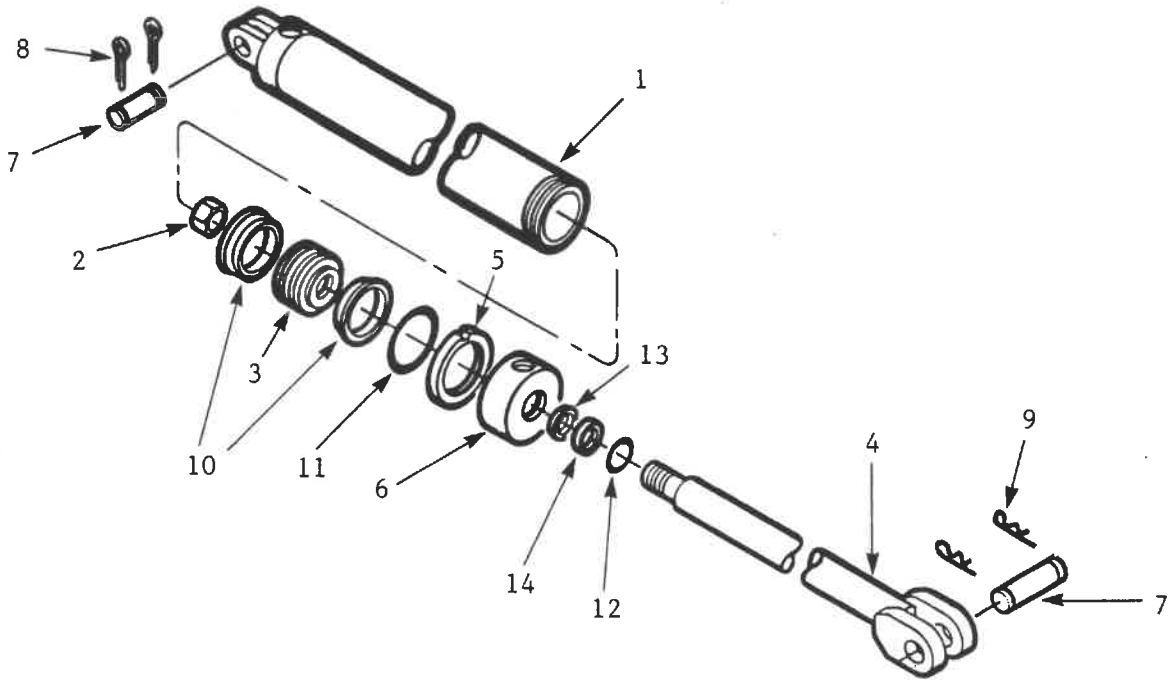

ITEM	PART No.	DESCRIPTION	QTY.
–	121846	Cylinder, Hydraulic - 3 1/2 x 34 in. - DIL	a/r
1	121849	Barrel Assembly - 3 1/2 x 34 in. Cylinder - DIL	1
2	118441	Nut, Lock 7/8 in. UNF, GR 5, Plated - Uni-torque	1
3	121684	Piston - 3 1/2 in. Cylinder - DIL	1
4	121851	Rod Assembly 3 1/2 x 34 in. Cylinder - DIL	1
5	121748	Ring, Lock - 3 1/2 in. Cylinder - DIL	1
6	121845	Cap, Open - 3 1/2 in. Cylinder 2 in. Rod - DIL	1
7	121823	Pin 31.8 x 85 mm long (effective) - Plated	2
8	118836	Pin, Cotter 3/16 x 2 in.	2
9	118830	Pin, Hair 4.5 x 83 mm - Plated	2
10	---	Seal, U-Cup	2
11	---	Seal, O-Ring	1
12	---	Seal, O-Ring	1
13	---	Seal, U-Cup	1
14	---	Seal, Rod Wiper	1
–	121852	Kit, Seal - 3 1/2 in. Cylinder 2 in. Rod - DIL	1
		NOTE: Rebuilt Units may be available	
–	121853	Cylinder, Hydraulic - 3 1/2 x 34 in. - DIL "**Rebuilt**"	a/r

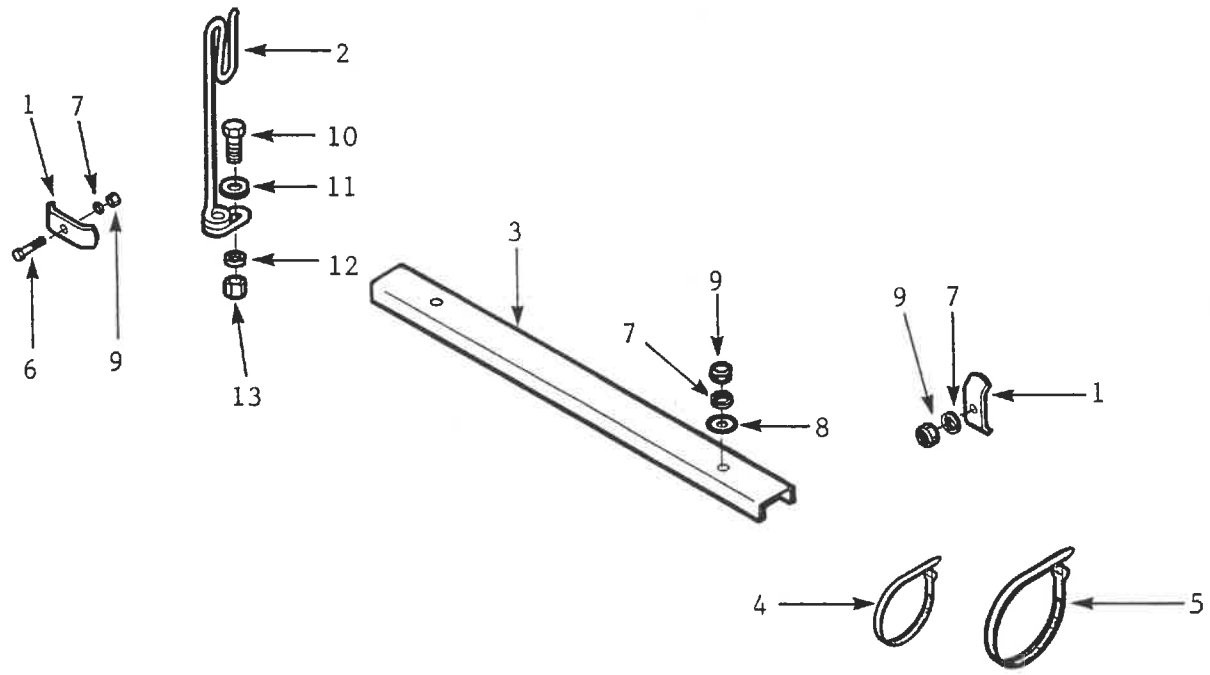

ITEM	PART No.	DESCRIPTION	QTY.
1	650256	Hose Clip - 2 Hose	a/r
2	143111	Holder, Hose - Flexible	1
3	240378	Shield - 4 Hose - 1219 mm long	1
4	133008	Tie, Hose - Plastic - Black - 3/32 x 9/64 x 11 in.	a/r
5	133007	Tie, Hose - Plastic - Releasable - 1/16 x 1/2 x 22 in.	a/r
6	118121	Bolt, Hex 5/16 x 2 in. UNC, GR 5, Plated	a/r
7	118530	Washer, Lock 5/16 in. Plated	a/r
8	118538	Washer, Flat 5/16 in. Plated	a/r
9	118427	Nut, Hex 5/16 in. UNC, GR 5, Plated	a/r
10	118024	Bolt, Hex 5/8 x 1 1/2 in. UNC, GR 5, Plated	1
11	118514	Washer, Flat 5/8 in. Plated	1
12	118508	Washer, Lock 5/8 in. Plated	1
13	118407	Nut, Hex 5/8 in. UNC, GR 5, Plated	1

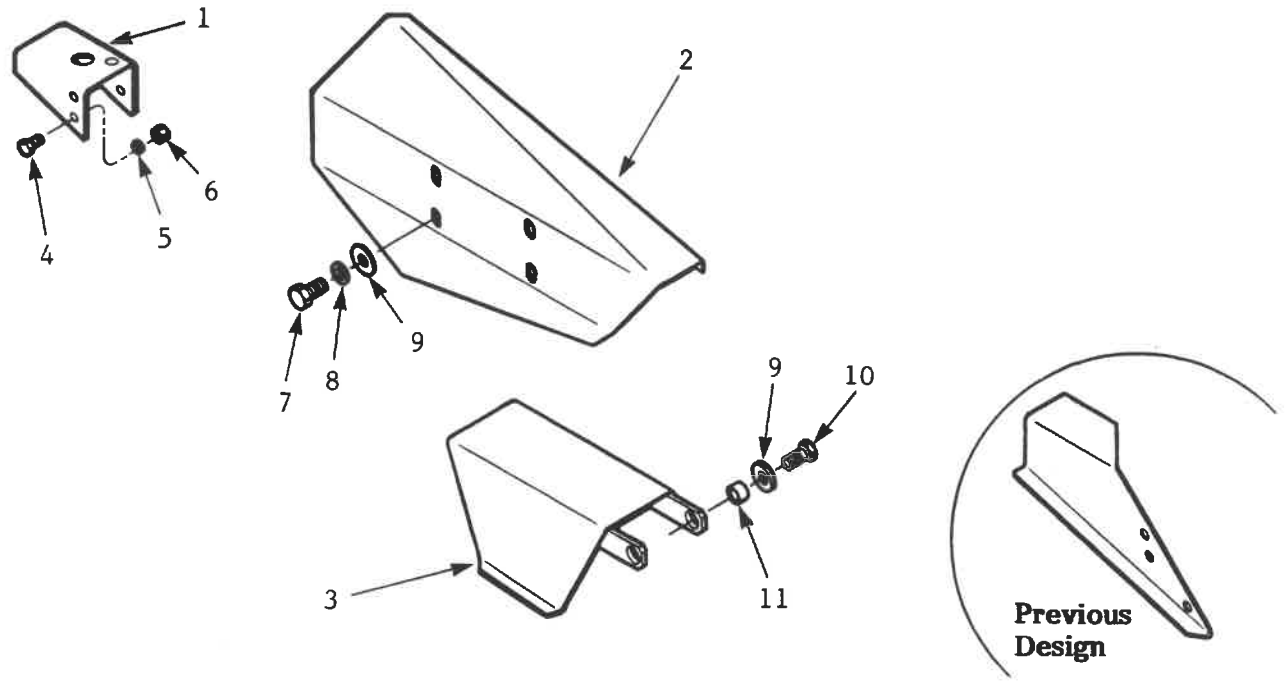

ITEM	PART No.	DESCRIPTION	QTY.
1	240376	Shield, Shaft - Front Bearing - RP/S3	1
2	240384	Shield, Chain - RP/S3	1
3	240399	Shield, Torque Limiter - 920 Gear Box - RP/S3	1
4	118177	Bolt, Hex 5/16 x 3/4 in. UNC, GR 5, Plated	a/r
5	118530	Washer, Lock 5/16 in. Plated	a/r
6	118427	Nut, Hex 5/16 in. UNC, GR 5, Plated	a/r
7	118008	Bolt, Hex 1/2 x 1 in. UNC, GR 5, Plated	a/r
8	118504	Washer, Lock 1/2 in. Plated	a/r
9	118512	Washer, Flat 1/2 in. Plated	a/r
10	118009	Bolt, Hex 1/2 x 1 1/4 in. UNC, GR 2, Plated	2
11	240402	Bushing 18 OD x 1.1 Wall x 12 mm long - Galvanized	2
		PREVIOUS DESIGN	
--	---	Shield, Gear Box - RP/S3 (no longer available replaced by ITEMS #3, 9, 10 & 11)	

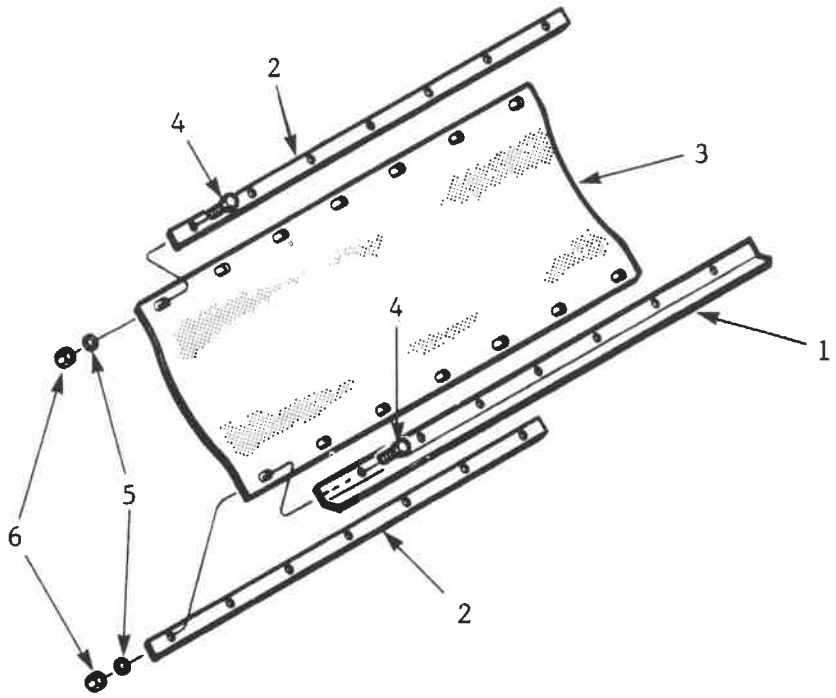

ITEM	PART No.	DESCRIPTION	QTY.
1	240372	Stiffener, Flap - RP/S3	1
2	240374	Bar, Bolt, - 7 Hole - 280 mm Hole Centres	2
3	240238	Flap, Rock - 915 x 1870 mm long	1
4	118136	Bolt, Hex 3/8 x 1 1/2 in. UNC, GR 5, Plated	14
5	118503	Washer, Lock 3/8 in. Plated	14
6	118403	Nut, Hex 3/8 in. UNC, GR 5, Plated	14

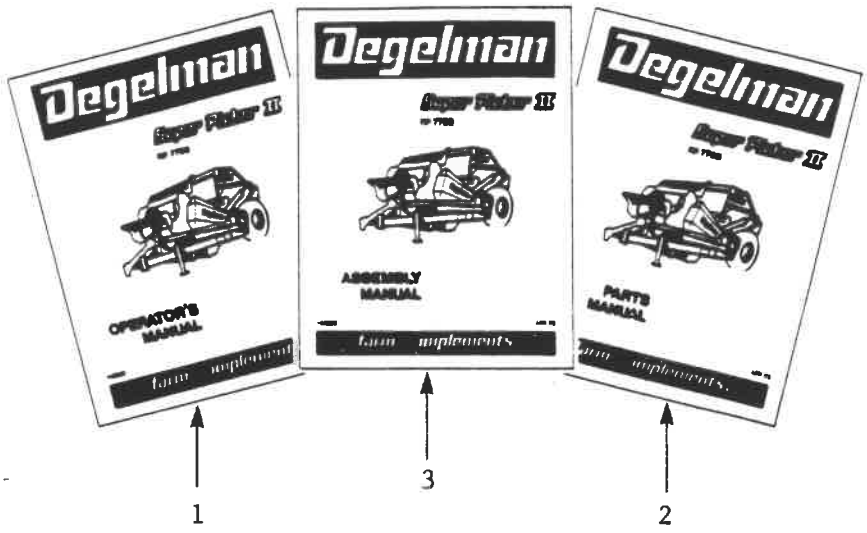

ITEM	PART No.	DESCRIPTION	QTY.
1	142299	Manual - RP/S3 - Operators	1
2	142300	Manual - RP/S3 - Parts	1
3	142298	Manual - RP/S3 - Assembly	1

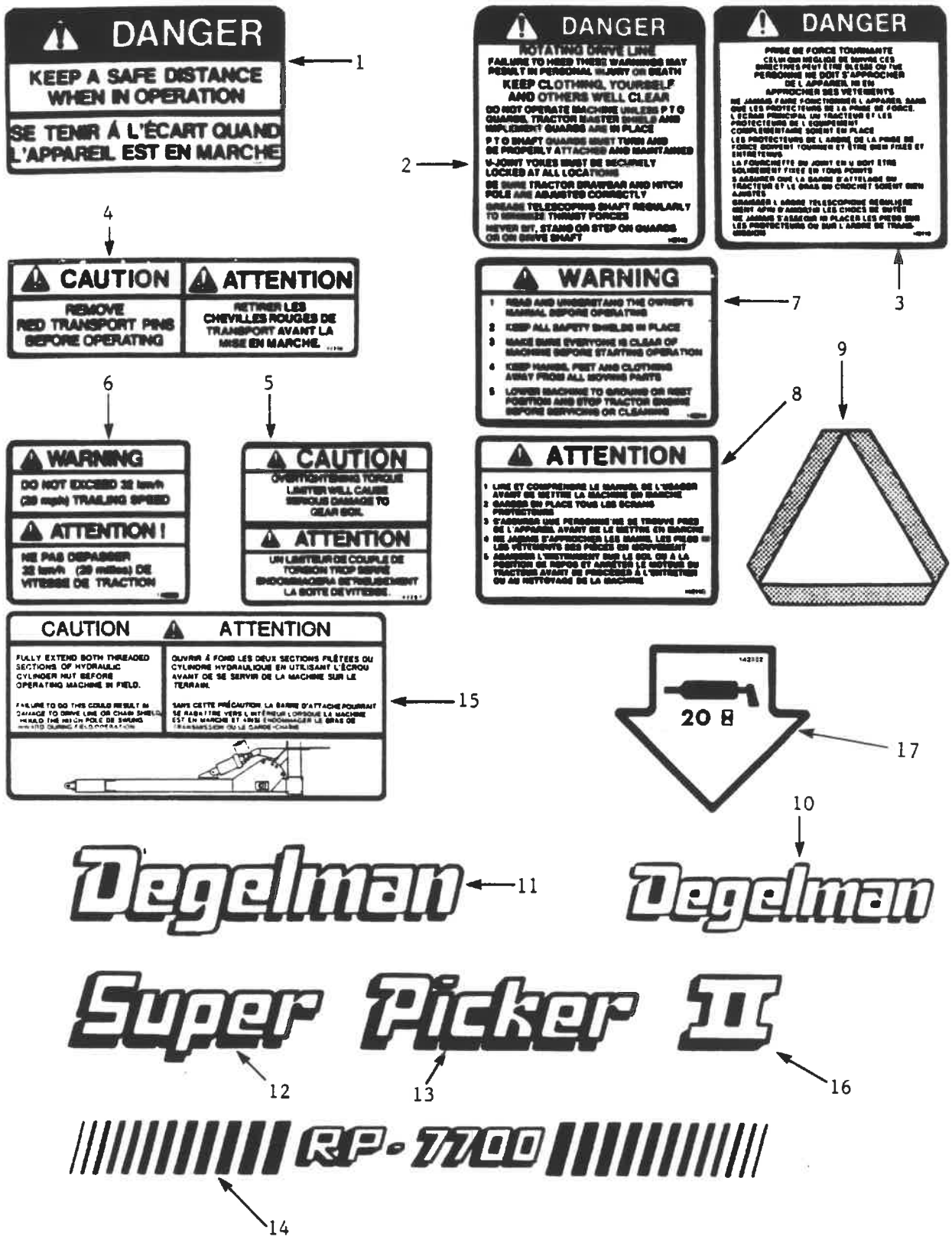
DANGER
KEEP A SAFE DISTANCE WHEN IN OPERATION
SE TENIR À L'ÉCART QUAND L'APPAREIL EST EN MARCHE
1
DANGER
2
DANGER
3
4
CAUTION
ATTENTION
REMOVE RED TRANSPORT PINS BEFORE OPERATING
RETIRER LES CHEVILLES ROUGES DE TRANSPORT AVANT LA MISE EN MARCHE
WARNING
7
6
5
WARNING
DO NOT EXCEED 32 km/h (20 mph) TRAILING SPEED
ATTENTION !
NE PAS DEPASSER 32 km/h (20 miles) DE VITESSE DE TRACTION
CAUTION
ATTENTION
9
8
ATTENTION
CAUTION
ATTENTION
FULLY EXTEND BOTH THREADED SECTIONS OF HYDRAULIC CYLINDER NUT BEFORE OPERATING MACHINE IN FIELD.
OUVRIR À FOND LES DEUX SECTIONS FILETÉES DU CYLINDRE HYDRAULIQUE EN UTILISANT L'ÉCROU AVANT DE SE SERVIR DE LA MACHINE SUR LE TERRAIN.
15
20 MPH
17
10
Degelman
11
Degelman
Super Picker II
12
13
16
RP-7700
14

DECALS

ITEM	PART No.	DESCRIPTION	QTY.
1	142255	Decal, Danger - "Keep/Se Tenir . . ."	3
2	142110	Decal, Danger - "Rotating . . ."	2
3	142115	Decal, Danger - "Prise De . . ."	2
4	142256	Decal, Caution - "Remove/Retirer . . ."	1
5	142257	Decal, Caution - "Torque Limiter . . ."	1
6	142220	Decal, Warning - "Do Not Exceed . . ."	1
7	142014	Decal, Warning - "Read and . . ."	1
8	142116	Decal, Warning (Attention) - "Lire et Comp . . ."	1
9	142156	Decal, Slow Moving Vehicle	1
10	142009	Decal, Degelman - 3 3/4 x 16 1/4 in. long	1
11	142008	Decal, Degelman - 6 x 25 3/4 in. long	2
12	142248	Decal - Super - 148 x 416 mm long	2
13	142250	Decal - Picker - 125 x 455 mm long	2
14	142296	Decal - RP-7700 - 85 x 1055 mm long	2
15	142275	Decal, Caution - "Fully/Ouvrir . . ."	1
16	142297	Decal, "II" - 125 x 175 mm	2
17	142322	Decal, Grease - 20 Hours	2

NOTES

Degelman
INDUSTRIES LTD.

- We provide complete operating instructions.
- We provide complete repair parts lists.
- We provide written warranty protection.
- We agree to provide ten year parts availability.

Quality Equipment

Degelman INDUSTRIES LTD.
P.O. Box 830
272 Industrial Drive
Regina, Saskatchewan
Canada S4P 3B1
Tel: (306) 543-4447

Dealer