Degelman

OPERATOR, ASSEMBLY & PARTS MANUAL

rock rake
RR1500



142274 v1.5

DEGELMAN INDUSTRIES LP
BOX 830-272 INDUSTRIAL DRIVE,
REGINA, SK, CANADA, S4P 3B1
FAX 306.543.2140 PH 306.543.4447
1.800.667.3545 DEGELMAN.COM

ROCK RAKE
RR1500
PTO/HYDRAULIC MODELS

Degelman

rock rake
RR1500

TABLE OF CONTENTS

Introduction	*1*
Safety	
Safety Information	*2*
Safety Decal Locations	*6*
Assembly	
Assembly Instructions	*10*
Operation	
Preparation	*38*
Machine Positioning	*44*
Transporting	*56*
Storage	*57*
Maintenance & Service	
Service	*58*
Adjustments	*65*
Repair	*71*
Troubleshooting	*82*
Specifications	*83*
Parts	
General Information	*85*
Basic Components	*86*
Hydraulic Components	*90*
Drive Systems & Components	*92*
Miscellaneous	*99*
Warranty	*103*

DEGELMAN INDUSTRIES LP
BOX 830-272 INDUSTRIAL DRIVE,
REGINA, SK, CANADA, S4P 3B1
FAX 306.543.2140 PH 306.543.4447
1.800.667.3545 DEGELMAN.COM

⚠ IMPORTANT:



READ MANUAL

rock rake
RR1500

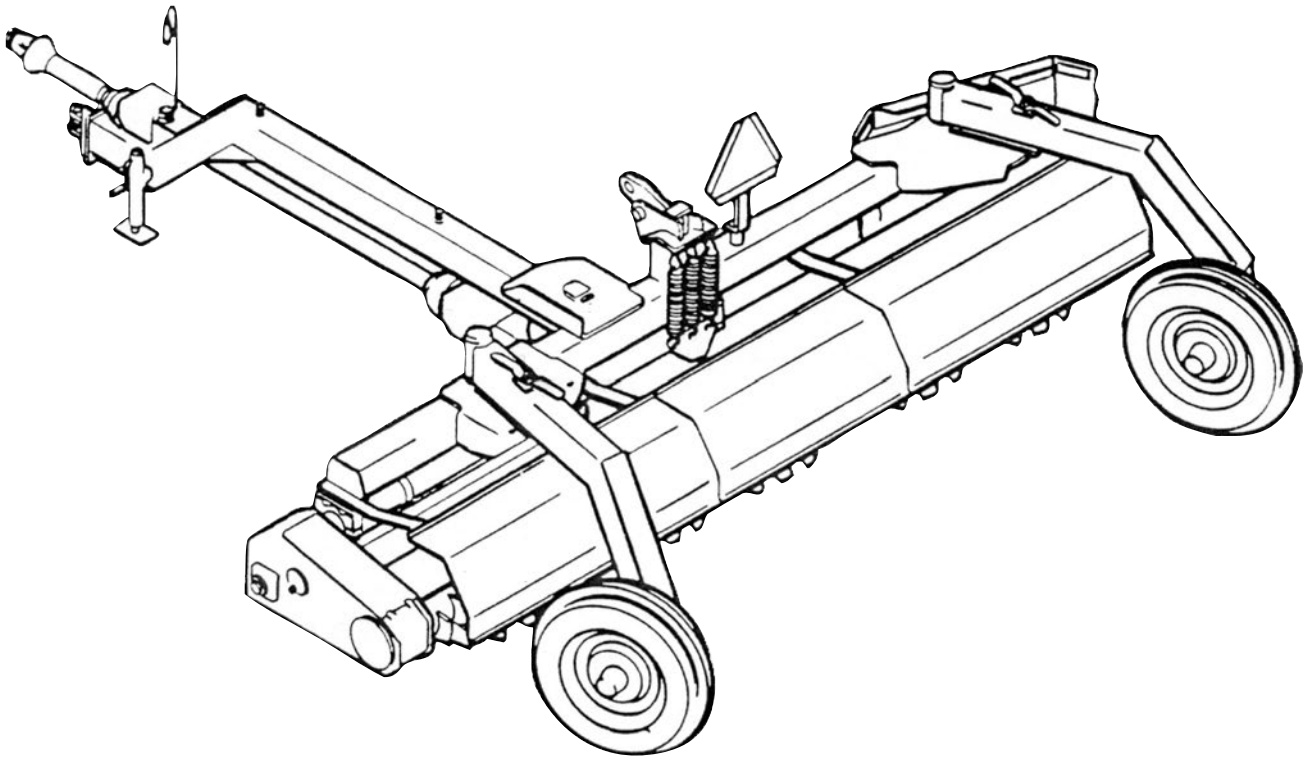

CONGRATULATIONS on your choice of a Degelman Rock Rake 1500 to complement your farming operation. It has been designed and manufactured to meet the needs of a discerning Agricultural market for the efficient windrowing of rocks.

Use this manual as your first source of information about the machine. If you follow the instructions given in this manual, your Rock Rake will work well for many years.

Safe, efficient and trouble free operation of your Degelman Rock Rake requires that you and anyone else who will be operating or maintaining the Rake, read and understand the Safety, Operation, Maintenance and Troubleshooting information contained within this manual.

Keep this manual handy for frequent reference and to pass on to new operators or owners. Call your Degelman Dealer if you need assistance, information, or additional copies of the manual.

OPERATOR ORIENTATION - The directions left, right, front and rear, as mentioned throughout the manual, are as seen from the tractor drivers' seat and facing in the direction of travel.

Why is SAFETY important to YOU?

3 BIG Reasons:

- Accidents Can Disable and Kill
- Accidents Are Costly
- Accidents Can Be Avoided

Safety Alert Symbol

The **Safety Alert Symbol** identifies important safety messages applied to the Rock Rake 1500 and in this manual. When you see this symbol, be alert to the possibility of **injury or death**. Follow the instructions provided on the safety messages.



The **Safety Alert Symbol** means:

ATTENTION!
BECOME ALERT!
YOUR SAFETY IS INVOLVED!

Signal Words

Note the use of the Signal Words: **DANGER**, **WARNING**, and **CAUTION** with the safety messages. The appropriate Signal Word has been selected using the following guidelines:

DANGER — **DANGER:** Indicates an imminently hazardous situation that, if not avoided, **WILL** result in death or serious injury if proper precautions are not taken.

WARNING — **WARNING:** Indicates a potentially hazardous situation that, if not avoided, **COULD** result in death or serious injury if proper precautions are not taken.

CAUTION — **CAUTION:** Indicates a potentially hazardous situation that, if not avoided, **MAY** result in minor or moderate injury if proper practices are not taken, or, serves as a reminder to follow appropriate safety practices.

Safety

YOU are responsible for the safe operation and maintenance of your Degelman Rock Rake. **YOU** must ensure that you and anyone else who is going to operate, maintain or work around the Rock Rake be familiar with the operating and maintenance procedures and related **SAFETY** information contained in this manual.
This manual will take you step-by-step through your working day and alerts you to all good safety practices that should be adhered to while operating this equipment.

Remember, **YOU** are the key to safety. Good safety practices not only protect you but also the people around you. Make these practices a working part of your safety program. Be certain that **EVERYONE** operating this equipment is familiar with the recommended operating and maintenance procedures and follows all the safety precautions. Most accidents can be prevented. Do not risk injury or death by ignoring good safety practices.

- Rock Rake owners must give operating instructions to operators or employees before allowing them to operate the Rock Rake, and at least annually thereafter per OSHA regulation 1928.51.
- The most important safety device on this equipment is a SAFE operator. It is the operator's responsibility to read and understand ALL Safety and Operating instructions in the manual and to follow these. All accidents can be avoided.
- A person who has not read and understood all operating and safety instructions is not qualified to operate the machine. An untrained operator exposes himself and bystanders to possible serious injury or death.
- Do not modify the equipment in any way. Unauthorized modification may impair the function and/or safety and could affect the life of the equipment.
- Think SAFETY! Work SAFELY!

General Safety

1. Read and understand the Operator's Manual and all safety signs before operating, maintaining or adjusting the Rake.



2. Install and properly secure all shields and guards before operating.
3. Have a first-aid kit available for use should the need arise and know how to use it.



4. Have a fire extinguisher available for use should the need arise and know how to use it.



5. Wear appropriate protective gear. This list includes but is not limited to:
   - A hard hat
   - Protective shoes with slip resistant soles
   - Protective glasses or goggles
   - Heavy gloves
   - Wet weather gear
   - Hearing protection
   - Respirator or filter mask

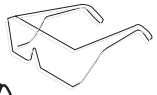



6. Clear the area of people, especially small children, and remove foreign objects from the machine before starting and operating.
7. Do not allow riders.
8. Lower rake, stop tractor engine, place all controls in neutral, set park brake, remove ignition key and wait for all moving parts to stop before servicing, adjusting, repairing or unplugging.
9. Review safety related items with all operators annually.

Operating Safety

1. Read and understand the Operator's Manual and all safety signs before using.

2. Lower rake, stop tractor engine, place all controls in neutral, set park brake, remove ignition key and wait for all moving parts to stop before servicing, adjusting, repairing or unplugging.

3. Keep hands, feet, hair and clothing away from all moving and/or rotating parts.

4. Do not allow riders on the Rake or tractor during operation or transporting.

5. Keep all shields and guards in place when operating.

6. Clear the area of all bystanders, especially children, before starting.

7. Do not operate machine on steep side hills or slopes.

8. Be careful when working around or maintaining a high-pressure hydraulic system. Ensure all components are tight and in good repair before starting.

9. Clean all reflectors, lights and the SMV sign before transporting on a highway or public road. Be sure to check with local highway authorities and comply with their lighting requirements.

10. Stay well back from machine when operating to prevent being hit by flying rocks. Keep others away.

Maintenance Safety

1. Review the Operator's Manual and all safety items before working with, maintaining or operating the Rake.

2. Lower rake, stop the tractor engine, place all controls in neutral, set park brake, remove ignition key and wait for all moving parts to stop before servicing, adjusting, repairing or unplugging.

3. Keep hands, feet, clothing and hair away from all moving and/or rotating parts.

4. Clear the area of bystanders, especially children, when carrying out any maintenance and repairs or making any adjustments.

5. Place safety stands or large blocks under the frame before removing tires or working beneath the machine.

6. Be careful when working around or maintaining a high-pressure hydraulic system. Wear proper eye and hand protection when searching for a high pressure hydraulic leak. Use a piece of wood or cardboard as a backstop when searching for a pin hole leak in a hose or a fitting.

7. Always relieve pressure before disconnecting or working on hydraulic system.

Storage Safety

1. Store unit in an area away from human activity.

2. Store machine with rake drum lowered.

3. Do not permit children to play around the stored unit.

Hydraulic Safety

1. Always place all tractor hydraulic controls in neutral before dismounting.

2. Make sure that all components in the hydraulic system are kept in good condition and are clean.

3. Replace any worn, cut, abraded, flattened or crimped hoses and metal lines.

4. Do not attempt any makeshift repairs to the hydraulic lines, fittings or hoses by using tape, clamps or cements. The hydraulic system operates under extremely high-pressure. Such repairs will fail suddenly and create a hazardous and unsafe condition.

5. Wear proper hand and eye protection when searching for a high-pressure hydraulic leak. Use a piece of wood or cardboard as a backstop instead of hands to isolate and identify a leak.



6. If injured by a concentrated high-pressure stream of hydraulic fluid, seek medical attention immediately. Serious infection or toxic reaction can develop from hydraulic fluid piercing the skin surface.

7. Before applying pressure to the system, make sure all components are tight and that lines, hoses and couplings are not damaged.

• Think SAFETY! Work SAFELY

Transport Safety

1. Read and understand ALL the information in the Operator's Manual regarding procedures and SAFETY when operating the Rake in the field/yard or on the road.

2. Check with local authorities regarding machine transport on public roads. Obey all applicable laws and regulations.

3. Always travel at a safe speed. Use caution when making corners or meeting traffic.

4. Make sure the SMV (Slow Moving Vehicle) emblem and all the lights and reflectors that are required by the local highway and transport authorities are in place, are clean and can be seen clearly by all overtaking and oncoming traffic.

5. Keep to the right and yield the right-of-way to allow faster traffic to pass. Drive on the road shoulder, if permitted by law.

6. Always use hazard warning flashers on tractor when transporting unless prohibited by law.

7. Always use a pin with provisions for a mechanical retainer and a safety chain when attaching to a tractor or towing vehicle.

Tire Safety

1. Failure to follow proper procedures when mounting a tire on a wheel or rim can produce a blow out which may result in serious injury or death.

2. Do not attempt to mount a tire unless you have the proper equipment and experience to do the job.

3. Have a qualified tire dealer or repair serviceman perform required tire maintenance.

Safety

Safety Decals

1. Keep safety decals and signs clean and legible at all times.
2. Replace safety decals and signs that are missing or have become illegible.
3. Replaced parts that displayed a safety sign should also display the current sign.
4. Safety decals or signs are available from your Dealer Parts Department. Safety decals will be available free of charge upon request.

REMEMBER - If Safety Decals have been damaged, removed, become illegible or parts replaced without decals, new decals must be applied. New decals are available from your authorized dealer free of charge.

How to Install Safety Decals

- Be sure that the installation area is clean and dry.
- Decide on the exact position before you remove the backing paper.
- Remove the smallest portion of the split backing paper.
- Align the decal over the specified area and carefully press the small portion with the exposed sticky backing in place.
- Slowly peel back the remaining paper and carefully smooth the remaining portion of the decal in place.
- Small air pockets can be pierced with a pin and smoothed out using the piece of decal backing paper.

Safety Decal Locations

The types of decals and locations on the equipment are shown in the illustrations on pages 6 to 8. Good safety requires that you familiarize yourself with the various Safety Decals, the type of warning and the area, or particular function related to that area, that requires your SAFETY AWARENESS.

- **Think SAFETY! Work Safely!**

Safety Reflector Decals & Degelman Logo

142556 - Decal, Reflector Red - 2 x 9	(3)
142557 - Decal, Reflector Amber - 2 x 9	(5)
142650 - Decal, Fluorescent - 2 x 9	(3)
142009 - Decal, Degelman - 3-3/4"	(3)

Safety & Other Important Information Decals

A	142362 - Decal, Warning-Pinch Point	(2)
B	142355 - Decal, Caution- 7-Point	(1)
C	142372 - Decal, Danger-Rotating D-line - 540	(1)
	142373 - Decal, Danger-Rotating D-line - 1000	(1)
D	119295 - Decal, Danger-Rotating D-line	(3)
E	119297 - Decal, Danger-Guard Missing	(3)
F	142358 - Decal, Warning-Rotating Part Hazard	(2)
G	142359 - Decal, Warning-Rotating Part Hazard	(1)
H	143264 - Decal, Important-Slip Clutch	(1)
I	142547 - Decal, Important-Disconnect Drive	(1)
J	142370 - Decal, Important-Secure Shield	(1)
K	142369 - Decal, Important-Install Stop Bolt	(1)
L	142368 - Decal, Important-Install Transport Pin	(1)
M	142361 - Decal, Warning-Rotating Rake	(3)

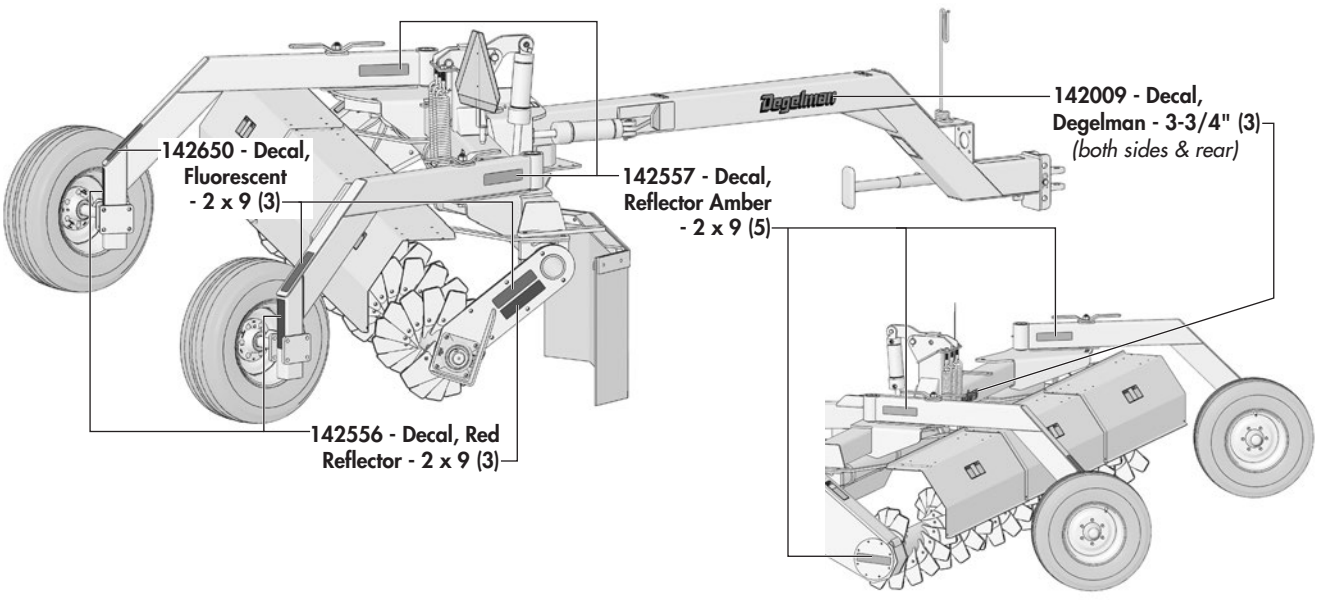

Safety Decal Locations

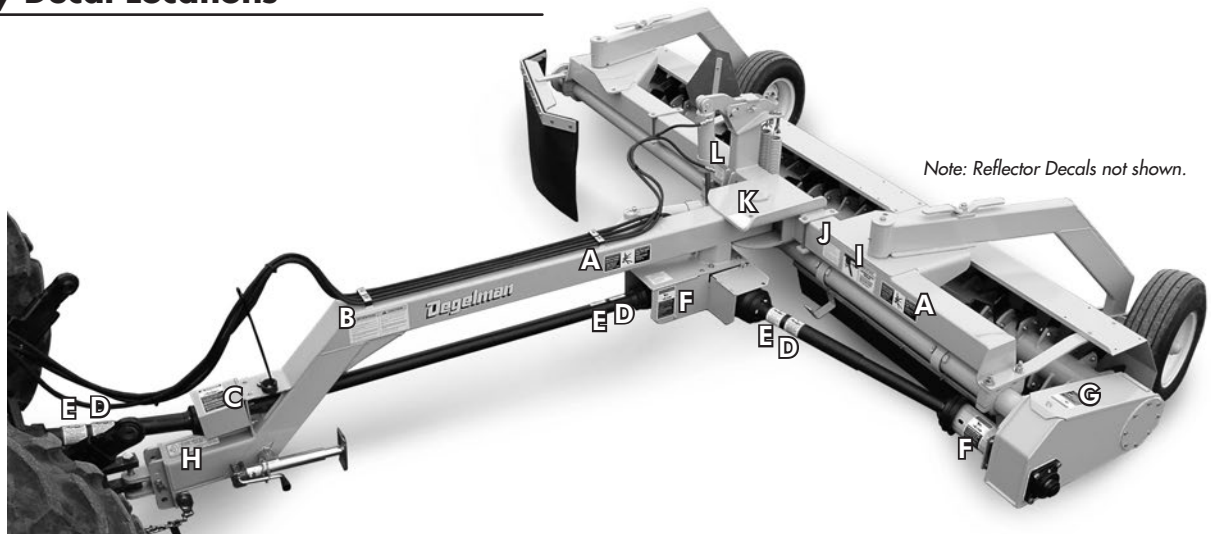

Note: Reflector Decals not shown.

A 142362 - Decal, Warning - Pinch Point (2)

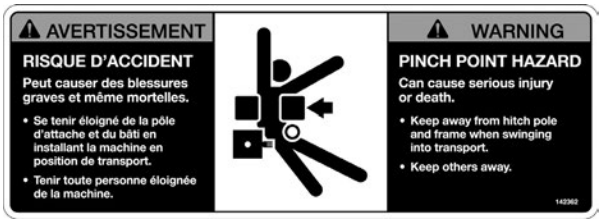

B 142355 - Decal, Caution - 7-Point (1)

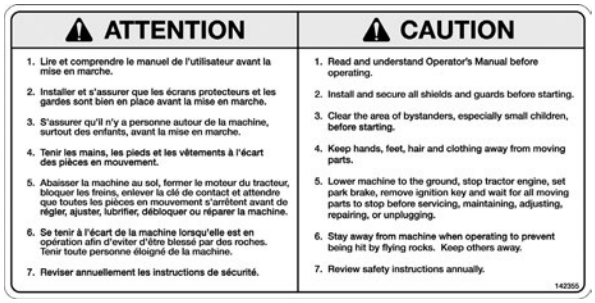

C 142372 - Decal, Danger - Rotating Driveline - 540 (1)



-OR-

142373 - Decal, Danger - Rotating Driveline - 1000 (1)



D 119295 - Decal, Danger - Rotating Driveline (3)



NOTE - *Items **D** & **E** are supplied by the driveline manufacturer. The appearance of the decal and descriptions may differ.*

E 119297 - Decal, Danger - Guard Missing (3)



F 142358 - Warning, Rotating Part Hazard (2)



G 142359 - Warning, Rotating Part Hazard (1)



H 143264 - Decal, Important - Slip Clutch (1)

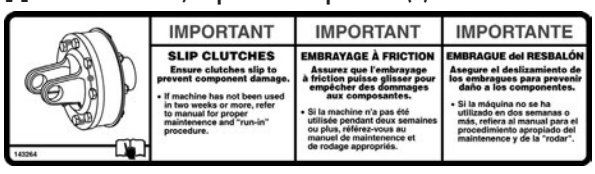

Safety Decal Locations

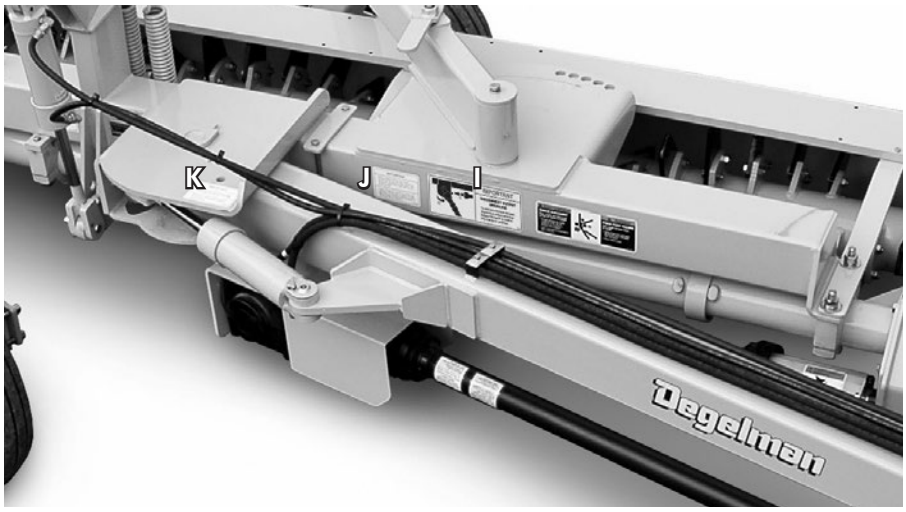

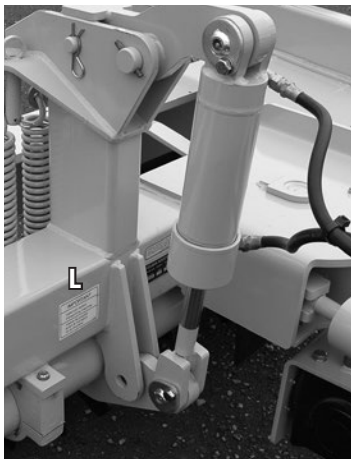

I 142547 - Decal, Important - Disconnect Drive (1)

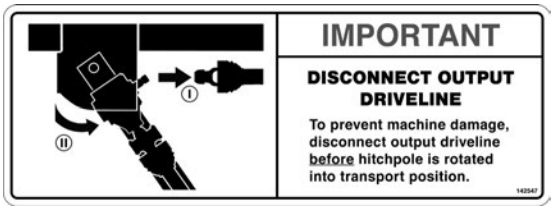

J 142370 - Decal, Important - Secure Shield (1)

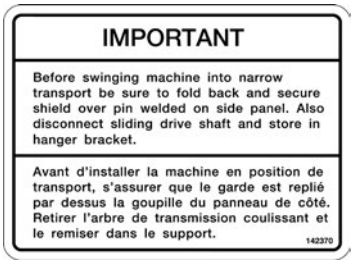

K 142369 - Decal, Important - Install Stop Bolt (1)

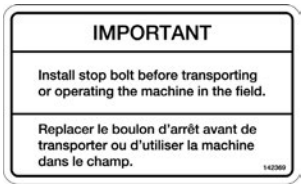

L 142368 - Decal, Important-Install Transport Pin (1)

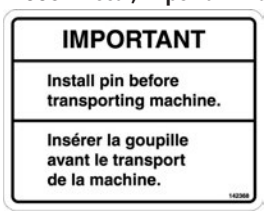

M 142361 - Decal, Warning - Rotating Rake (3)

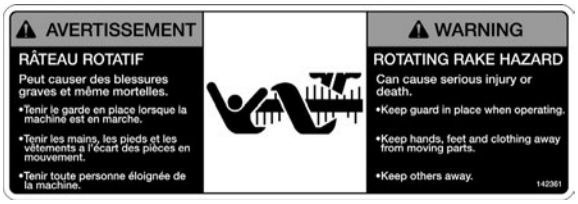

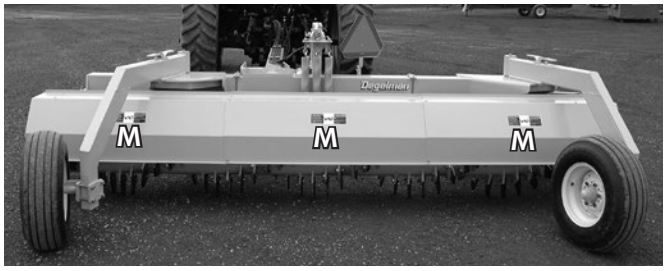

Safety Sign-Off Form

Degelman follows the general Safety Standards specified by the American Society of Agricultural Engineers (ASAE) and the Occupational Safety and Health Administration (OSHA). Anyone who will be operating and/or maintaining the Degelman Rock Rake must read and clearly understand ALL Safety, Operating and Maintenance information presented in this manual.

Do not operate or allow anyone else to operate this equipment until such information has been reviewed. Annually review this information before the season start-up.

Make these periodic reviews of SAFETY and OPERATION a standard practice for all of your equipment. We feel that an untrained operator is unqualified to operate this machine.

A sign-off sheet is provided for your record keeping to show that all personnel who will be working with the equipment have read and understand the information in the Operator's Manual and have been instructed in the safe operation of the equipment.

SIGN-OFF FORM

Date	Employees Signature	Employers Signature

Bolt Torque Chart

Tighten bolts to torque values shown at the various steps indicated.

(Full chart in Maintenance section of manual)

IMPERIAL TORQUE SPECIFICATIONS

(based on "Zinc Plated" values)

Size	Grade 5	Grade 8
	lb.ft (*N.m*)	lb.ft (*N.m*)
1/4"	**7 (*10*)**	**10 (*14*)**
5/16"	15 (*20*)	20 (*28*)
3/8"	**25 (*35*)**	**35 (*50*)**
7/16"	40 (*55*)	60 (*80*)
1/2"	**65 (*90*)**	**90 (*120*)**
9/16"	90 (*125*)	130 (*175*)
5/8"	**130 (*175*)**	**180 (*245*)**
3/4"	230 (*310*)	320 (*435*)
7/8"	**365 (*495*)**	**515 (*700*)**
1"	550 (*745*)	770 (*1050*)

Assembly Procedure

1. Dismantle main unit bundle and open crate.

Layout spiral drum and rockshaft in a similar manner as shown.

⚠ **CAUTION:** *Be sure no one is standing near by while positioning components.*

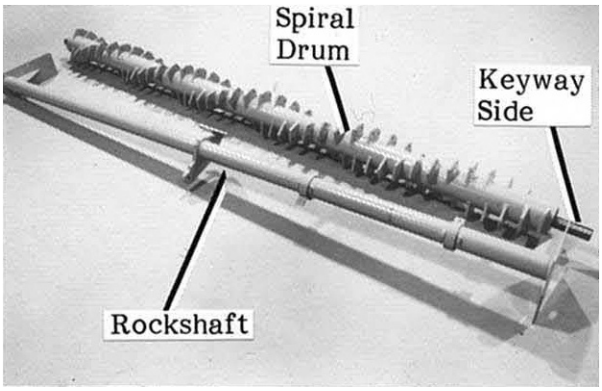

Position chain housing and rockshaft end plate as shown.

Note: Hydraulic Option models - Hole in chain housing assembly for hydraulic motor may need to enlarged prior to installation. It would be easiest to modify this hole prior to assembly. Refer to Page 25 for more info.

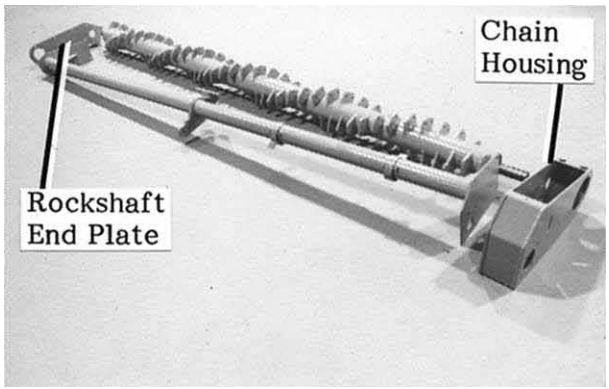

2. Secure heavy duty 2-7/16 in. flange bearing unit to the inside wall of chain housing using the four bolts, lock washers, and nuts shown. (Note the direction of grease fitting.)

Note: *It is recommended to apply silicon sealer (supplied) to bearing flange surface before installing components.*

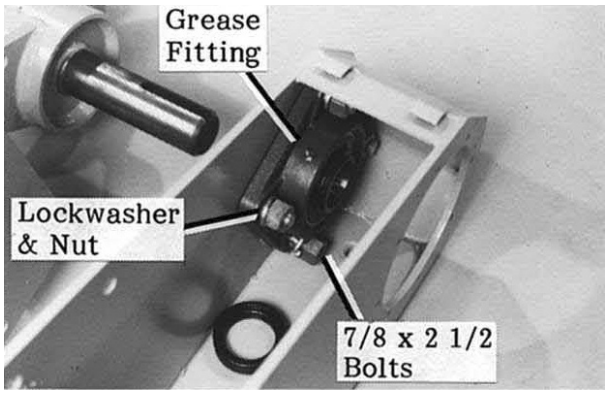

3. Slide bearing unit/chain housing combination onto spiral drum shaft (keyway slide) until the 3/4 in. (20mm) gap is obtained.

Install lock collar onto flange bearing. Use a hammer and a drift punch to tighten securely (clockwise).

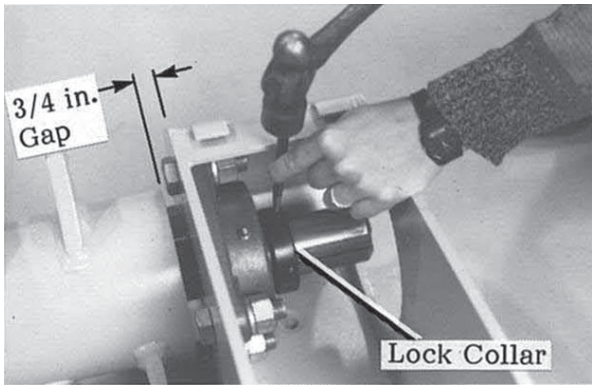

Secure lock collar by tightening setscrew.

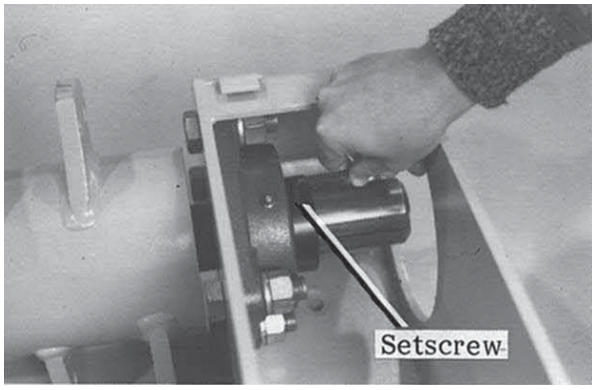

4. Installation of rockshaft to chain housing requires the 2″ flange bearing (PTO models) and chain tightener assembly as well.

Note: *It is recommended to apply silicon sealer (supplied) to bearing flange and around the bolt holes on inside of chain housing before installing components.*

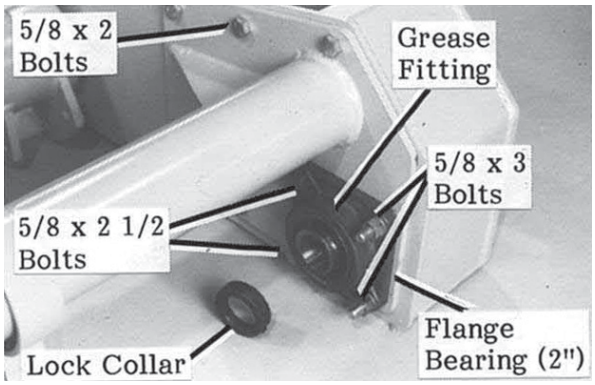

PTO Models Only: Secure rockshaft to chain housing using flange bearing along with 5/8 x 2-1/2″ and 5/8 x 3″ bolts, lock washers and nuts shown. (Note direction of grease fitting and front two bolts on bearing.) Store lock collar away for later assembly.

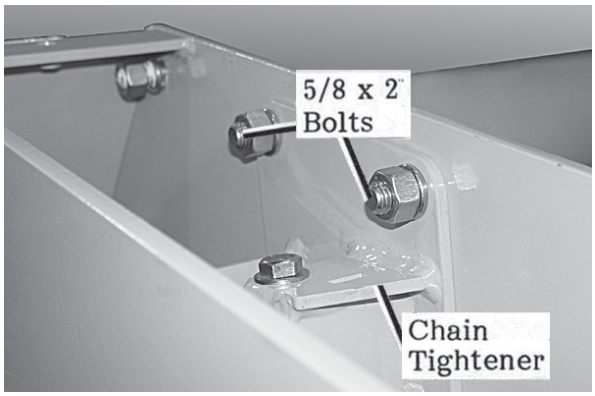

Secure chain tightener assembly inside chain housing using the 5/8″ x 2″ bolts, lock washers and nuts shown.

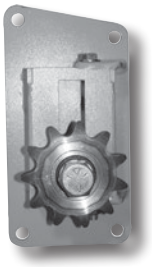

5. Combine the rockshaft, rockshaft end plate and spiral drum using the flange bearing along with bolts, lock washers and nuts shown. (Note direction of grease fitting.)

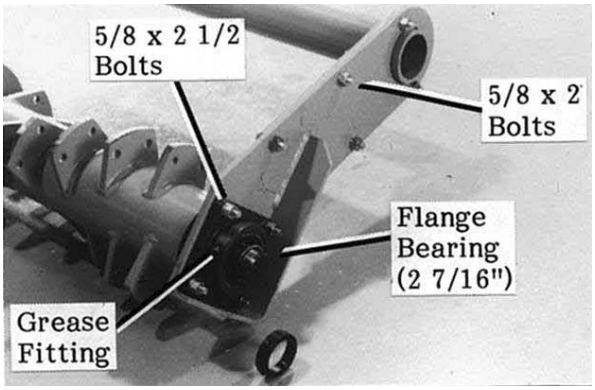

6. Pry and hold apart the rockshaft end plate and spiral drum to the gap shown.

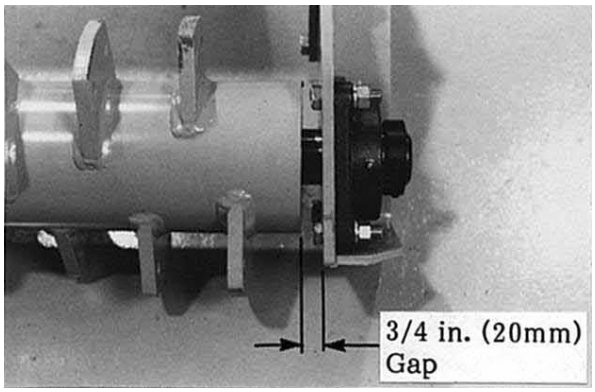

Install lock collar onto flange bearing. Use a hammer and drift punch to tighten securely (counter-clockwise).

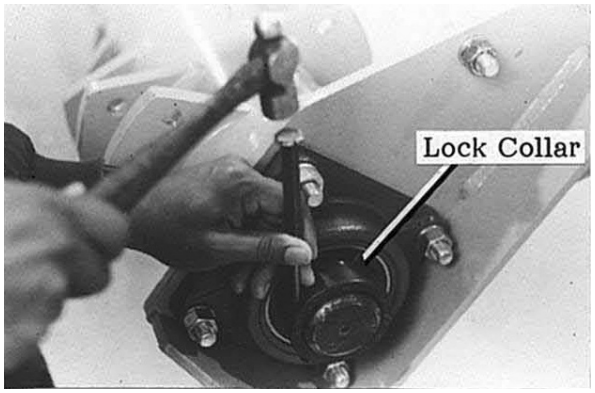

Secure lock collar by tightening setscrew.

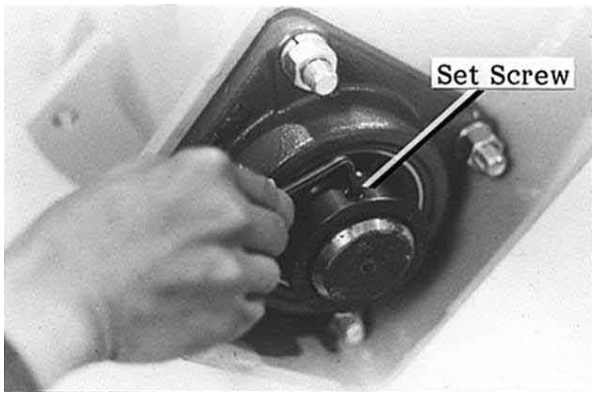

7. Tighten bolted connections assembled to this stage to torque values shown on Bolt Torque Chart on Page #10.

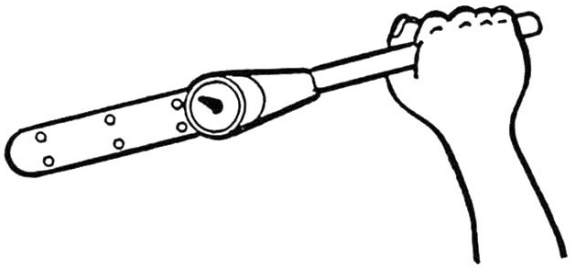

8. Construct a similar support stand structure as illustrated, over the rockshaft/drum sub assembly.

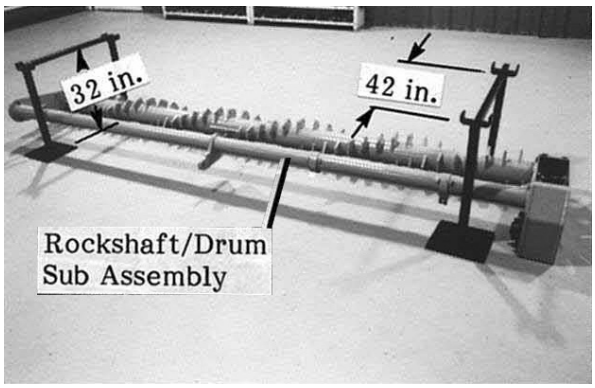

9. Lay main frame upon support and adjust over to align center lug on rockshaft to clevis plates on main frame.

⚠ **CAUTION:** *Be sure no one is standing near by while positioning components and check stands are secure before proceeding.*

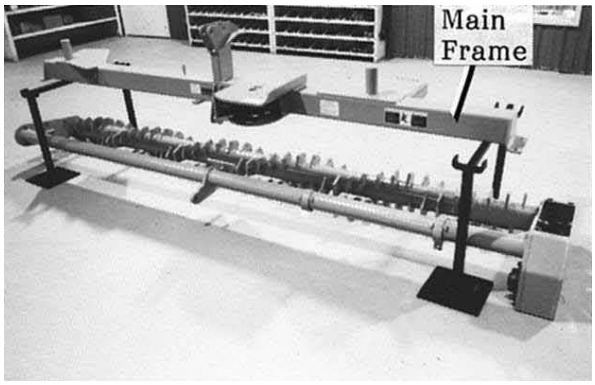

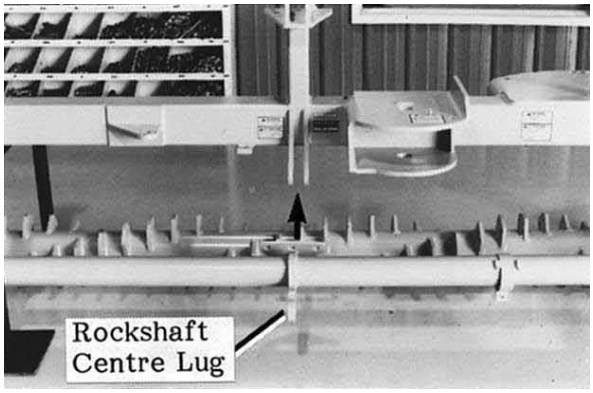

10. Install side wind jack to hitch pole and secure with chained pin.

Position hitch pole between main frame plates, aligning holes.

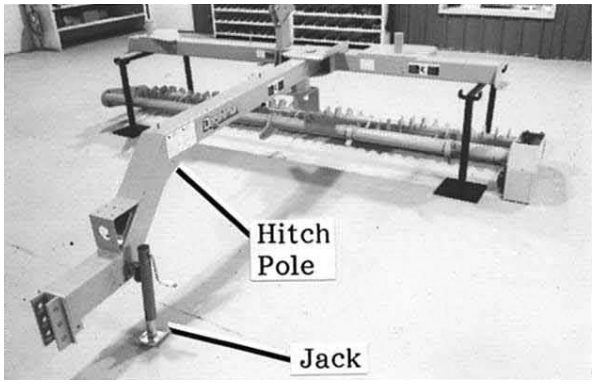

⚠ **CAUTION:** *Be sure no one is standing near by while positioning components.*

Drop the pin assembly into position.

Note: *Clean out the threaded hole in pin assembly using a 5/8 in. UNC tap.*

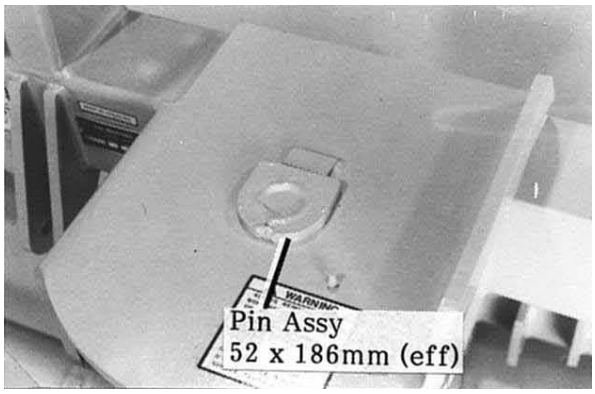

Secure pin assembly using the flat washer, lock washer and bolt shown.

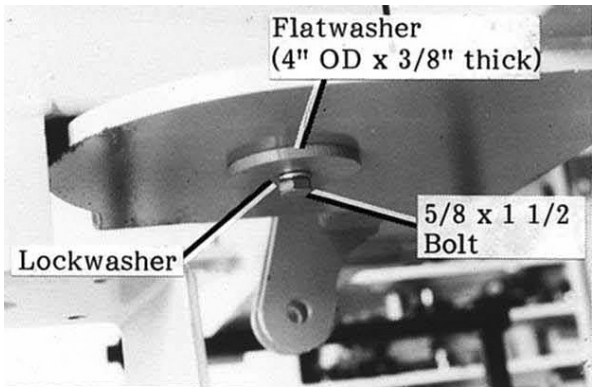

11. Install the safety stop bolt and high hex nut (fine thread) as shown into main frame plate.

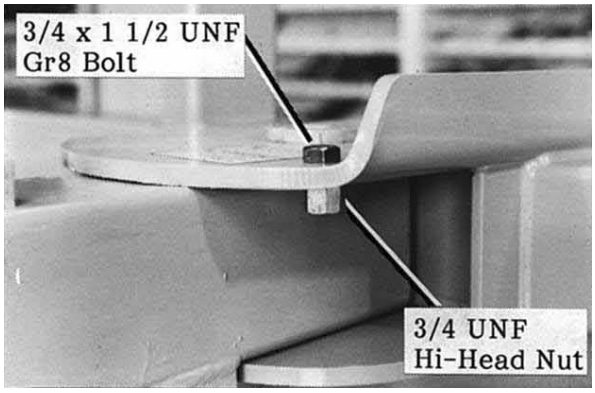

12. Level hitch pole to ground level by adjusting side wind jack.

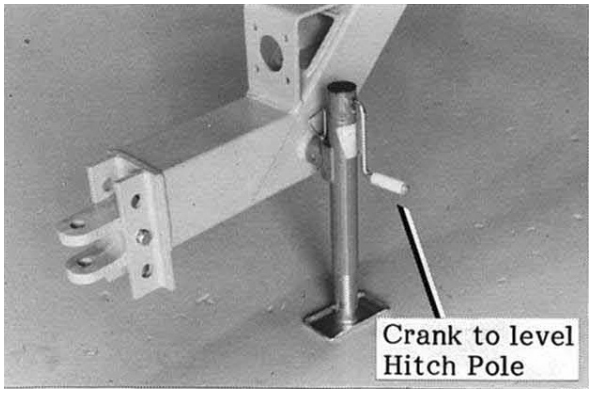

13. Drop both wheel legs into position over stubs on main frame.

Note: *Clean out the threaded hole in each stub using a 5/8 in. UNC tap.*

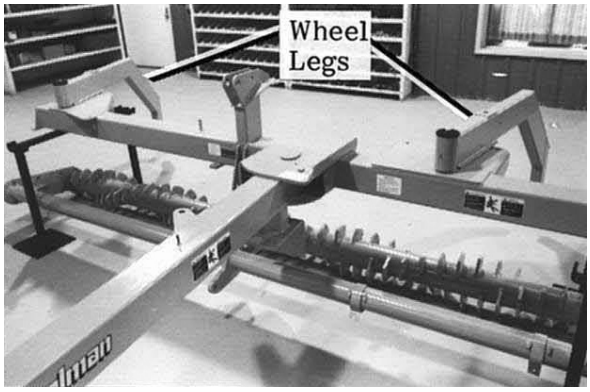

Secure wheel legs using the flat washer, lock washer and bolt shown.

Hydraulic Option Models: Install hose clamp plate before installing hardware on wheel leg (left side leg only).

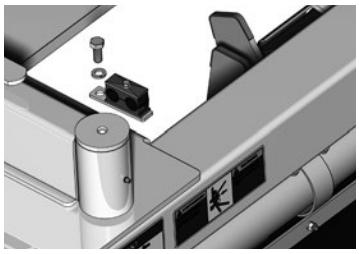

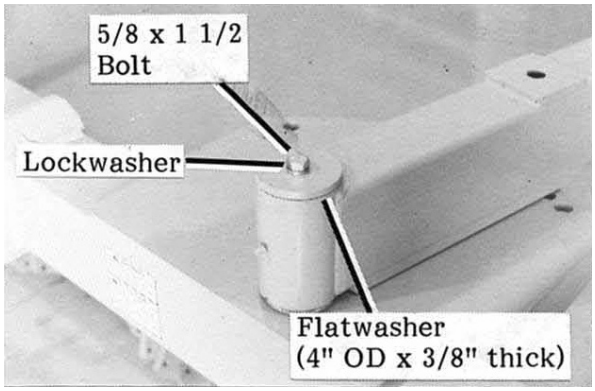

14. Swing both wheel legs over to align the hole with the center setting on pivot plate.

Insert the bolt/clip assembly from bottom side and secure with the wing nut assembly.

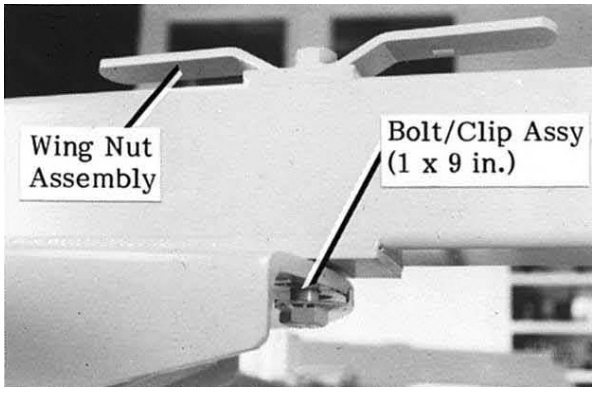

15. Mount the hub/spindle assembly (angled) to the left hand wheel leg as illustrated using the four bolts, lock washers and nuts shown.

Note: *Clean out threaded holes on casting using a 9/16 in. UNC tap.*

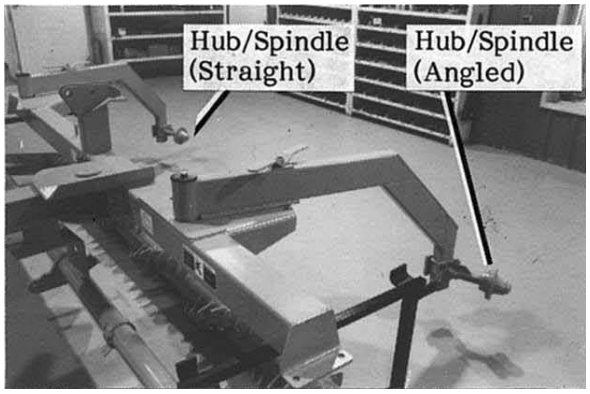

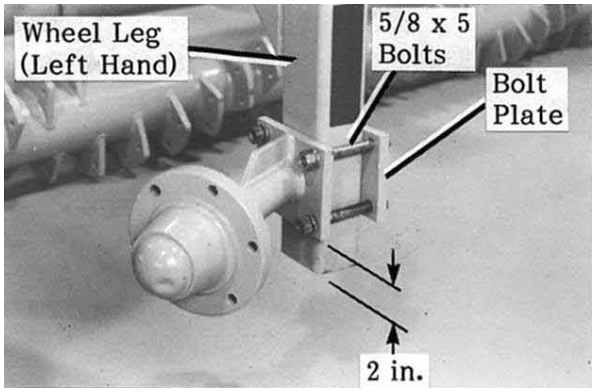

16. Mount the hub/spindle assembly (straight) to the right hand wheel leg as illustrated, similar to step #15.

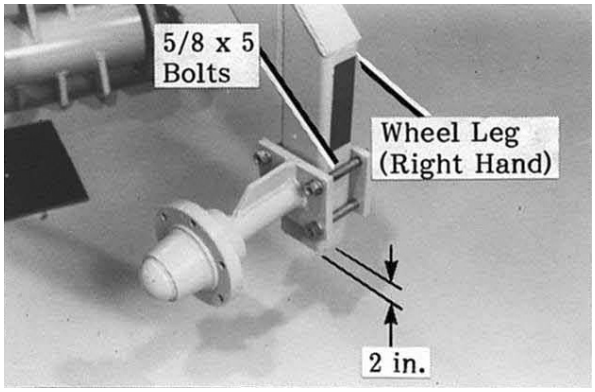

17. Mount a wheel assembly to each hub using the six wheel nuts or bolts (shown).

Torque to 120-130 lb.ft (165-175 N.m).

Inflate tires to 32 PSI (220 kPa).

⚠ **WARNING:** Do not exceed recommended tire pressure. Use care and caution when inflating tires to prevent personal injury from blow-outs.



18. Tighten bolted connections assembled to this stage to torque values shown on Bolt Torque Chart on page #10.

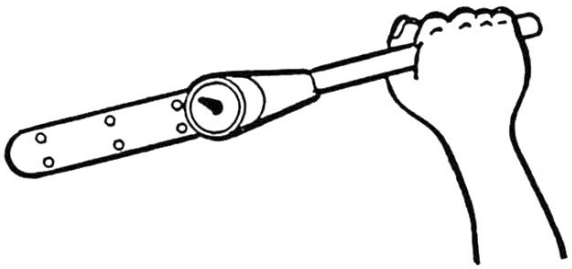

19. Remove support stands.

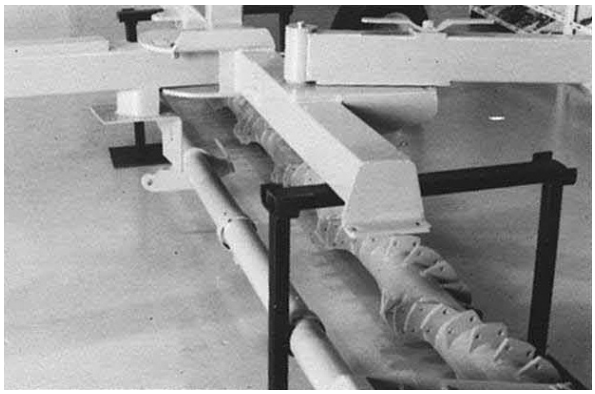

20. Position the base bearing casting on rockshaft pipe and make ready the cap bearing casting along with two shims (slotted) as illustrated.

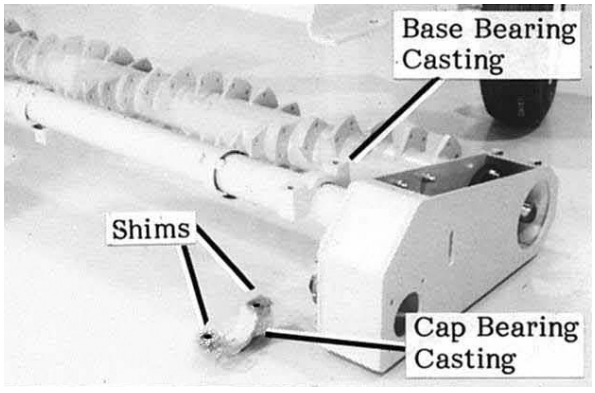

21. Repeat similarly at the other two locations shown.

Raise up rockshaft carefully toward main frame beam.

⚠ **CAUTION:** *Be sure no one is standing near while raising unit.*

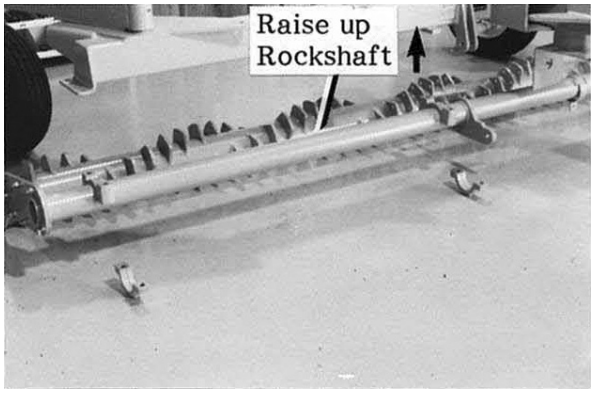

22. Mate and secure the center castings first using the two bolts and lock washers shown.

Note: *Clean out both threaded holes in bolt bar using a 3/4 in. UNC tap.*

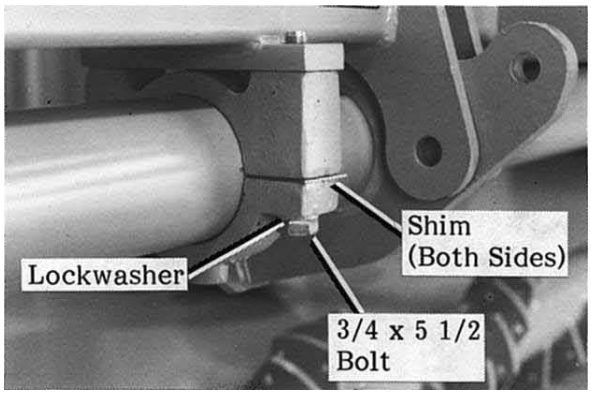

Mate and secure the left hand castings next along with the shield support bracket (slotted) using the two bolts, flat washers, lock washers and nuts shown.

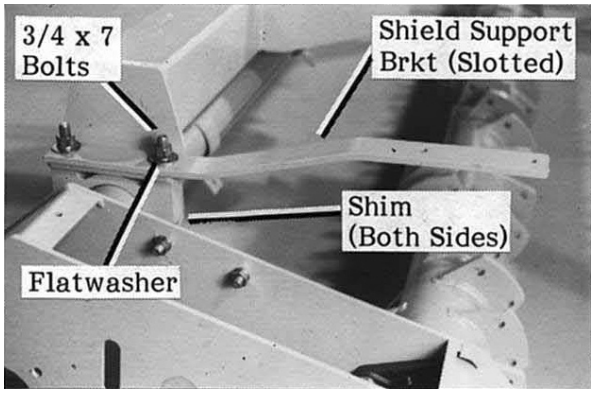

Mate and secure the right hand castings last along with the remaining shield support bracket (slotted) and stone guard bracket using the two bolts, lock washers, and nuts shown.

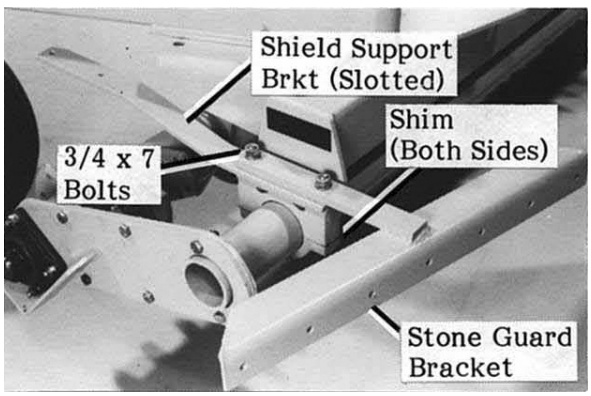

23. Raise spiral drum to allow installation of a transport pin (25.4 dia. x 95 mm effective).

Secure transport pin with hair pin shown.

⚠ **CAUTION:** *Be sure no one is standing near while raising unit.*

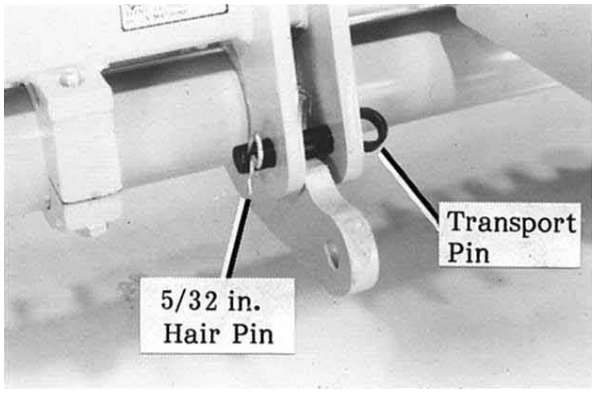

Steps 24-35 - PTO Models Only

24. Remove and discard plastic plug from top of gear box and add SAE 85W90 gear oil until level is flush with bottom of side fill hole.

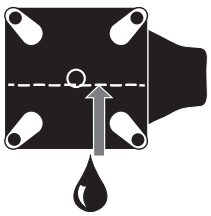

Install the threaded reducer bushing and vented plug combination into top hole.

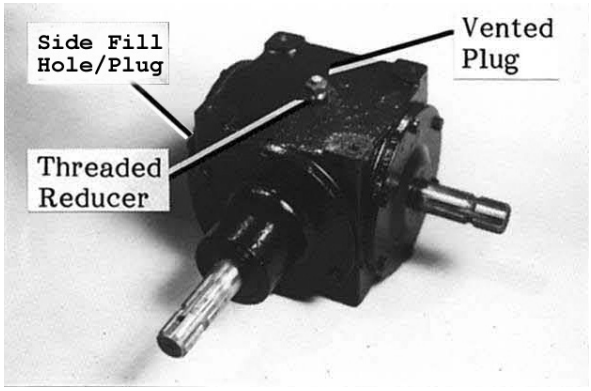

Mount the gear box to hitch pole in direction shown using the four bolts and lock washers.

Note: *Remove protective coating from shafts using a solvent and touch up surfaces with a smooth file.*

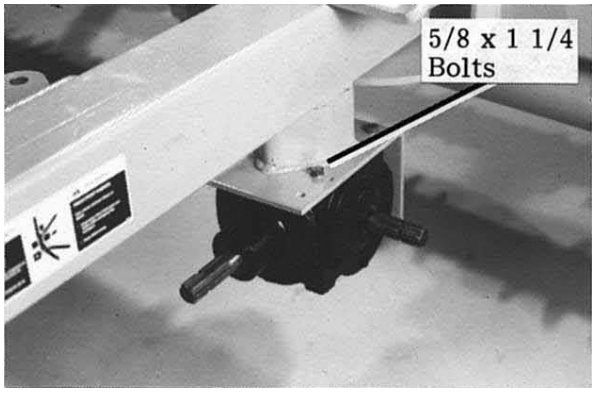

25. Remove protective coating from splines and shaft of drive shaft/torque limiter unit using a solvent and touch up surfaces with a smooth file.

Slide unit onto gear box shaft ensuring a smooth sliding fit by coating surfaces with oil.

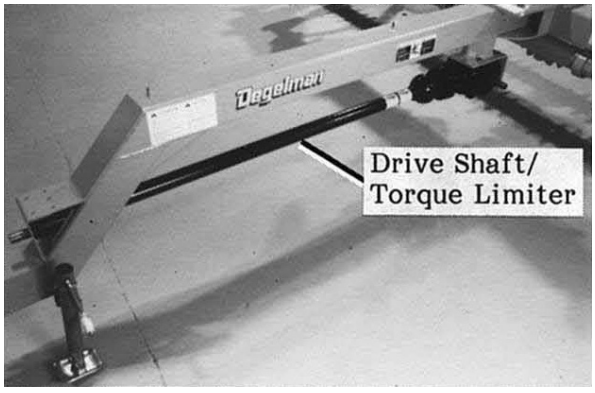

26. Mount the flanged bearing unit over shaft and secure to hitch pole using the four bolts, lock washers and nuts shown. (Note direction of grease fitting.)

⚠ **IMPORTANT:** *Lock collar is shipped with bearing but is not required.*

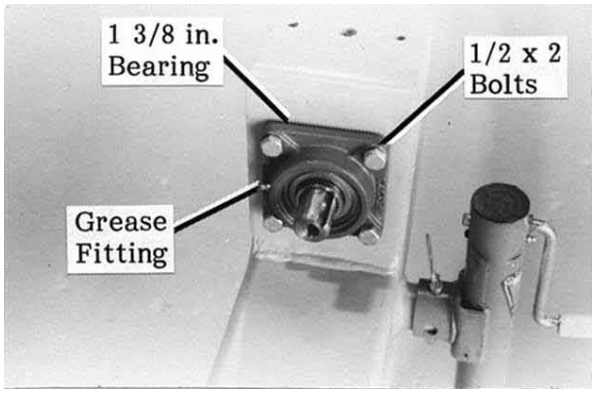

27. Obtain the key shown from the specially packaged plastic bag and locate into shaft keyway.

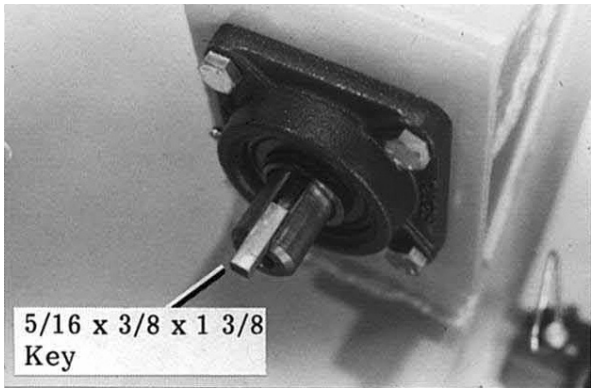

Install the slider shaft onto keyed shaft.

Note: *Clean out inside of yoke and touch up with a fine file to ensure a smooth sliding fit.*

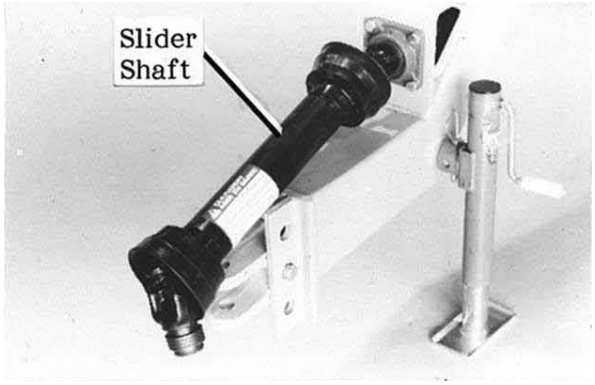

Secure with the washer and bolt (drilled head) shown. Tighten bolt fully.

Note: *Grease fitting can be removed to ease assembly of bolt.*

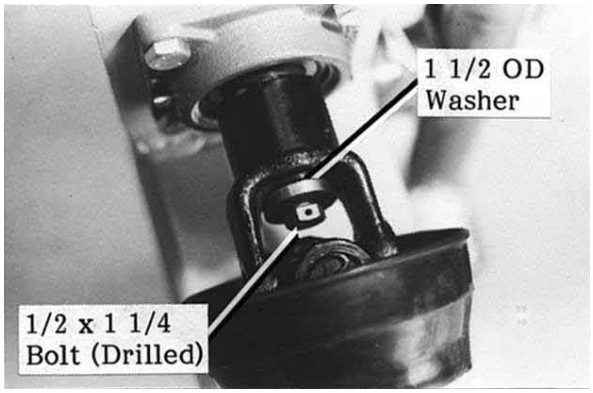

Pass the wire through hole in bolt head and twist wire around yoke as shown.

Replace grease fitting if previously removed.

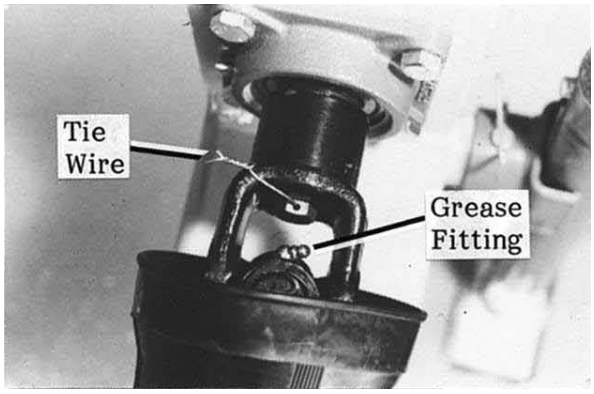

28. Note: *If you purchased a Rock Rake with the municipal option, refer to separate instruction steps found on the next page. For standard option Rock Rake machines continue with the following steps.*

Slide the input shaft sprocket assembly through chain housing and bearing unit.

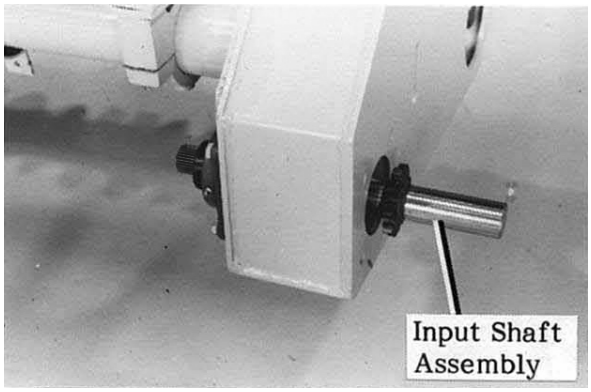

29. Mount the flanged bearing unit into place and secure with the four bolts, lock washers and nuts shown. (Note direction of grease fitting.)

Note: *It is recommended to apply silicon sealer (supplied) to bearing flange and around bolt holes on inside of chain housing before installing components.*

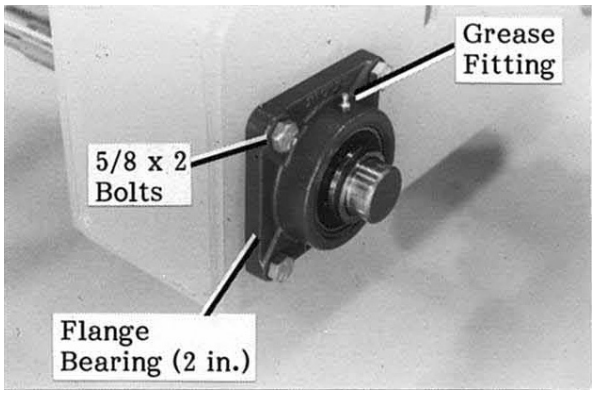

30. Position the input shaft sprocket at the distance shown from the inside of chain housing.

Position lock collar onto end of shaft.

(Continue to step 31)

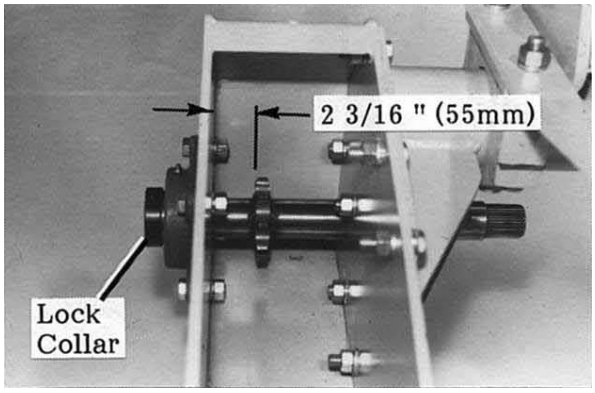

Municipal Option Only:

1. Mount the second flanged bearing unit into place and secure with the four bolts, lock washers and nuts shown. (Note direction of grease fitting.)

Note: *It is recommended to apply silicon sealer (supplied) to bearing flange and around bolt holes on inside of chain housing before installing components.*

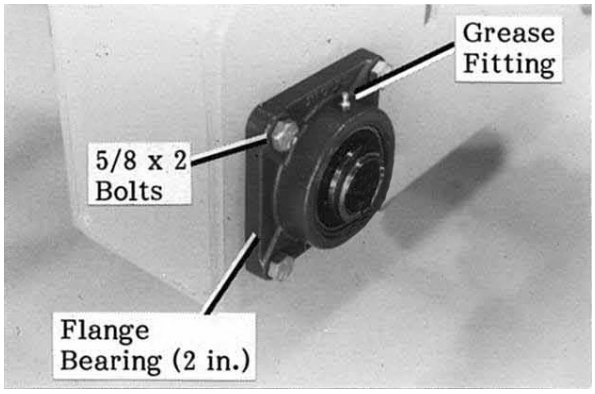

2. Remove protective solvent coating from shaft (1) using solvent and slide shaft through bearing approximately halfway into chain housing.

Locate the 1/2 x 1/2 x 3 in. long key (2) into shaft keyway.

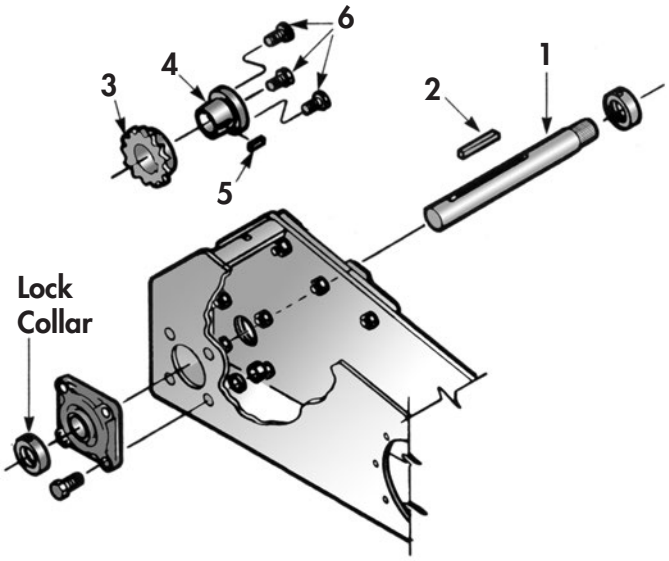

3. Sub-assemble loosely the sprocket (3), split tapered bushing (4), 3/8 x 1/2 x 1 in. long key (5) and the three 3/8 x 1-1/4 in. bolts (6).

Slide sub-assembly over shaft and push shaft through bearing.

4. Install lock collars over both ends of shaft against bearings.

Note: *Allow approximately 1/4 in. (6mm) of shaft to protrude beyond lock collar as illustrated.*

Tighten lock collar in direction of travel using a hammer and drift punch and secure set screws.

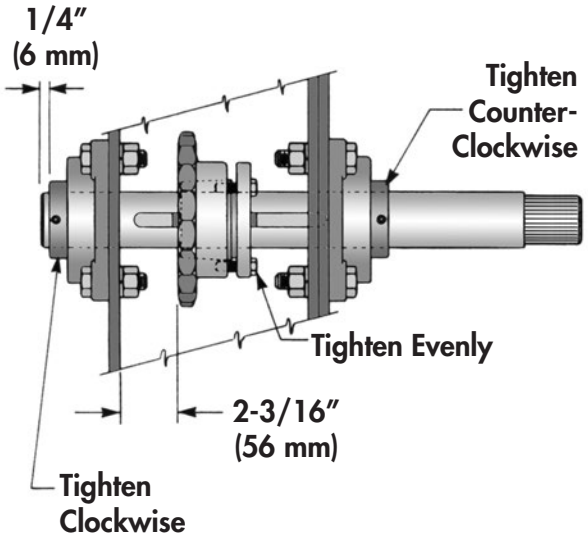

5. Locate and maintain the sprocket 2-3/16" (54mm) from inside chain housing while evenly tightening the three bolts.

(Continue to step 33).

31. Secure this setting of input shaft by tightening the lock collar (clockwise).



Secure lock collar by tightening the setscrew.



32. Tighten the other bearing lock collar (counter-clockwise) and secure collar by tightening setscrew.

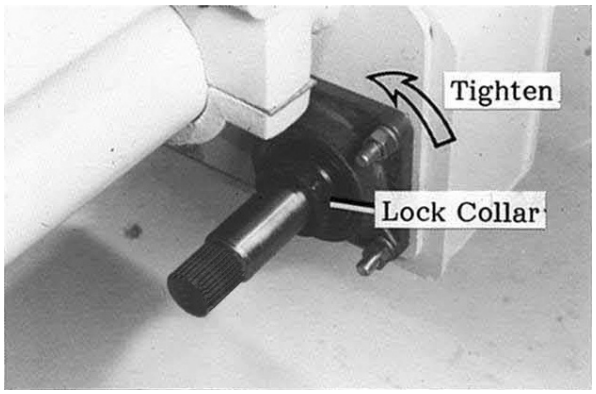

33. Install the slider shaft unit onto shaft locations shown.

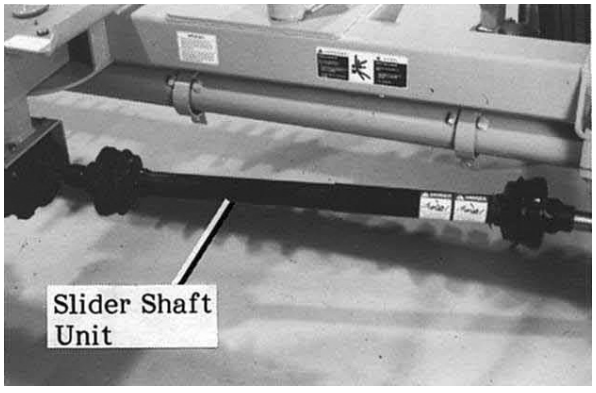

34. Attach the splined yoke to the input shaft and secure in place with the 5/8 Bolt and locknut.

(Torque to: 180 ft-lbs (245N.m) - refer to page 10)



35. Attach the opposite end of slider shaft unit to the gearbox and ensure full engagement of the quick disconnect yoke.

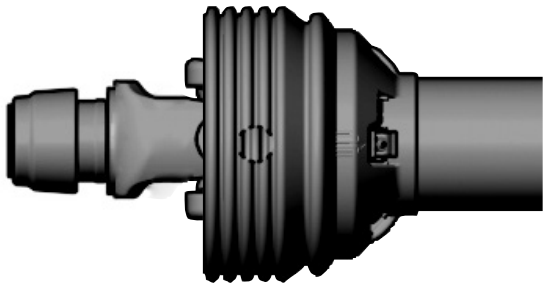

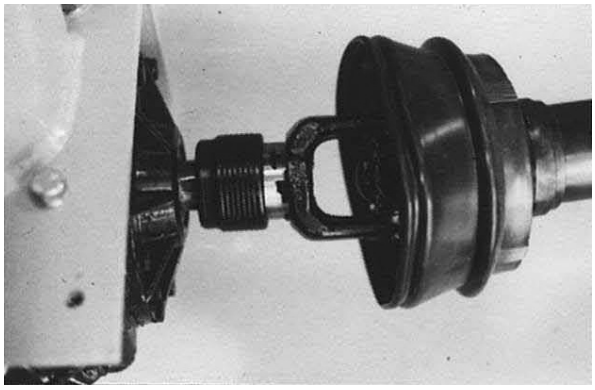

Hydraulic Option Models Only:

1. The hole for the hydraulic motor installation in the chain housing box may need to be enlarged prior to installation.

Temporarily attach “hole size template” using 5/8” hardware.

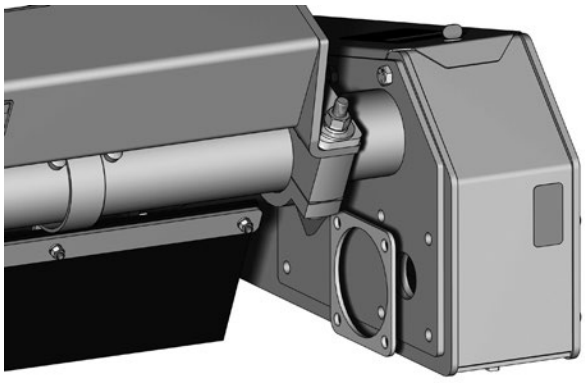

2. Torch or cut-out excess material to allow for required hole size indicated by hole in template.

3. Clean/clear away debris and remove template.

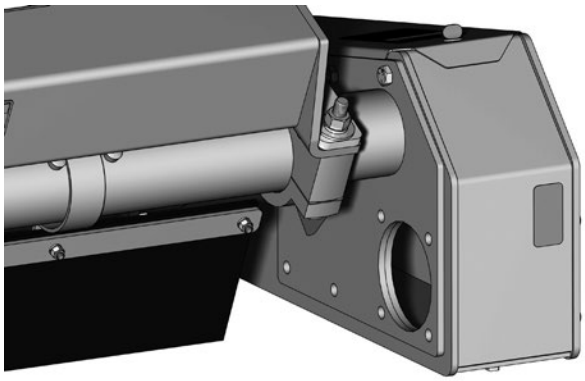

4. Install hydraulic motor and shield using 1/2” x 2-3/4” bolts and hardware.

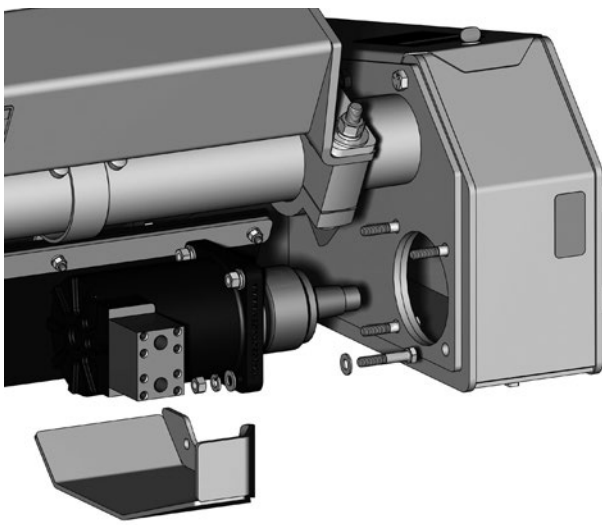

5. Install sprocket with supplied key and nut. (Torque nut to a Maximum of:
450 ft.lbs. (610 Nm)

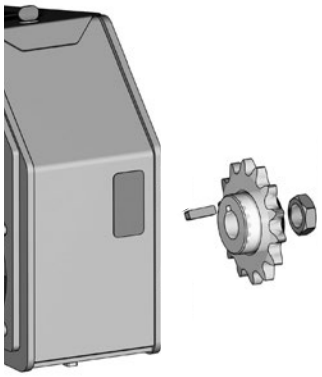

6. Install cover plate with 5/8 x 1-1/2 bolts and hardware.

Note: *It is recommended to apply silicon sealer (supplied) under cover plate and around bolt holes before installing.*

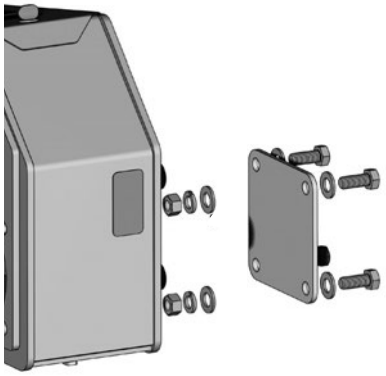

7. Install appropriate hydraulic fittings. Hoses are shown but will be installed during a later step.

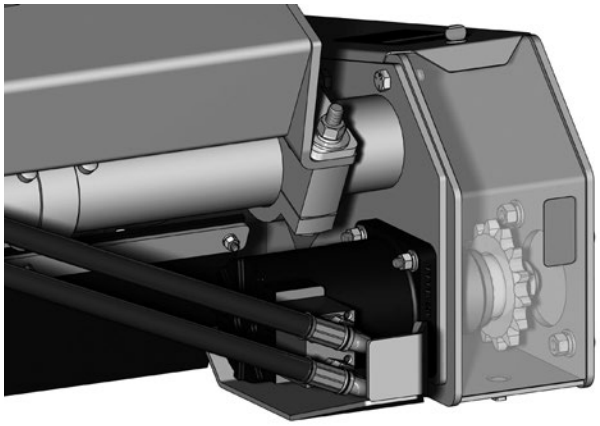

36. Remove the stepped key from the split taper bushing kit and position in keyway of the spiral drum shaft end (located in the chain housing).

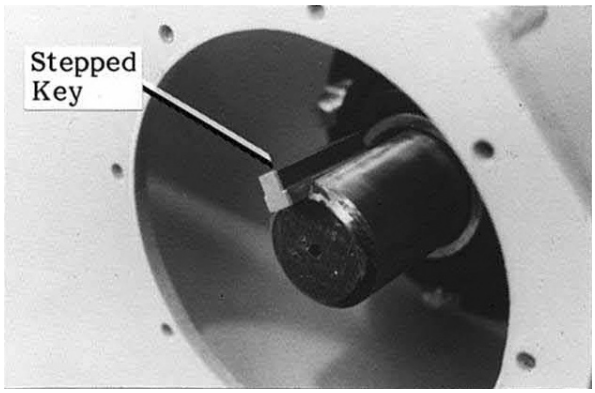

37. Slide the tapered bore sprocket over shaft and keyway.

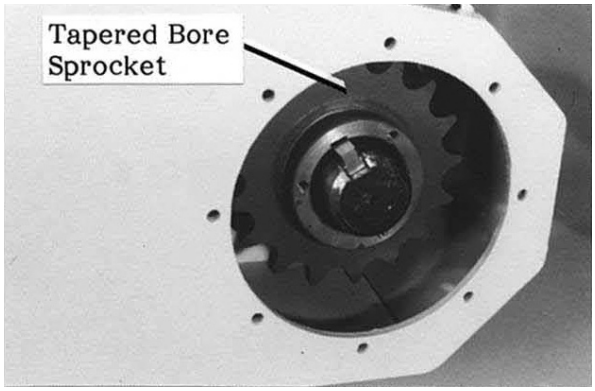

38. Locate the tapered bore sprocket away from the inside of the chain housing at the dimension shown and wedge the split taper bushing over the shaft and into sprocket bore.

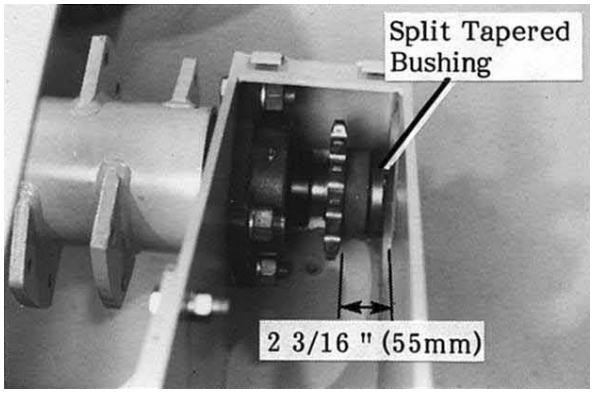

Install and tighten the three bolts provided to secure the tapered bore sprocket to shaft.

Note: *Check to ensure that the 2-3/16 in. (55mm) dimension has been maintained when bolts are fully tightened. Loosen and repeat if necessary.*

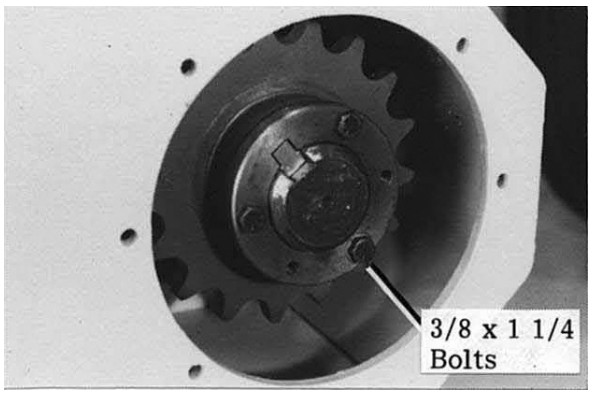

39. Wrap chain around drive sprockets and under tightener sprocket. Join ends using chain components illustrated below.

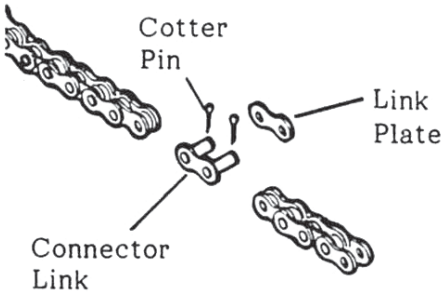

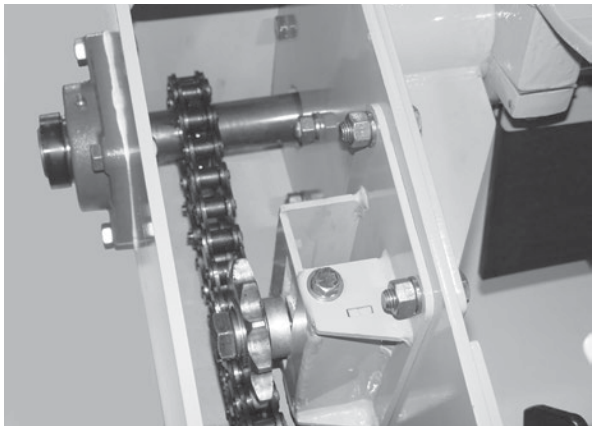

40. With the 1 x 3 1/2 in. sprocket bolt loosened, tighten the adjustment bolt to allow approximately 1/4" to 1/2" chain slack.

Torque the 1" sprocket bolt to:
550 ft-lbs (745 N.m)

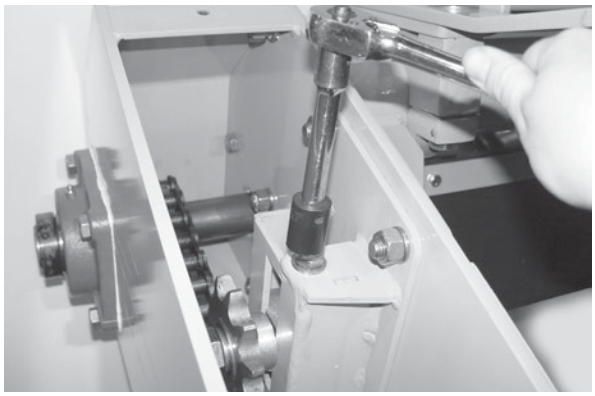

41. Secure the chain housing cover plate to chain housing using the eight self-tapping bolts.

Note: *It is recommended to apply silicon sealer (supplied) under cover plate and around bolt holes before installing.*

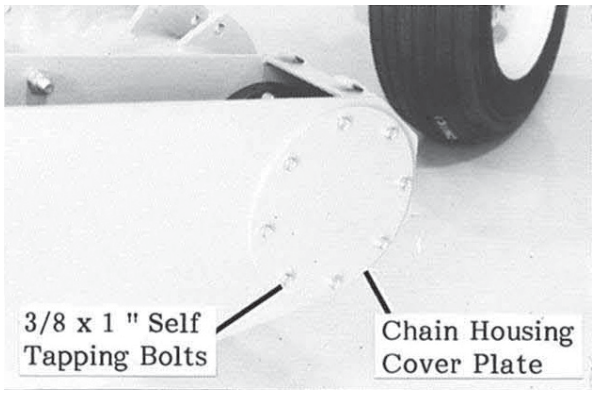

42. Position the chain housing cover in place on top of the chain housing.

Thread in the upper and lower thumb screws and flat washers to secure lid.

(*Note: Previous design (shown) had a single thumbscrew at upper location with a lower tab to secure bottom of lid. Install was to position the cover under the tab of chain housing and secure with upper thumbscrew & washer.)*

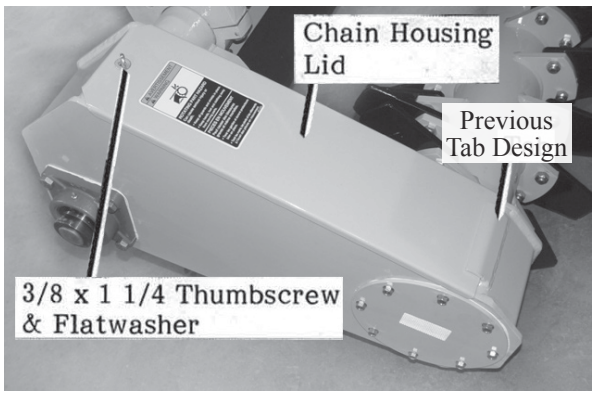

43. Tighten bolted connections assembled to this stage to torque values shown on Bolt Torque Chart on page #10.

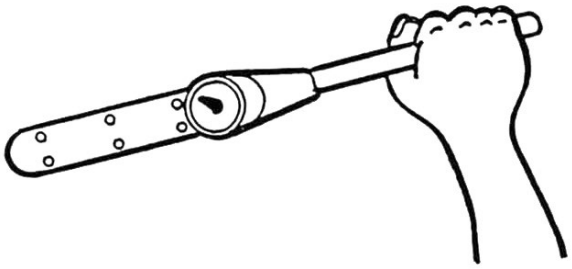

44. Assemble the hydraulic floating arm, pin and two roll pins between clevis plates.

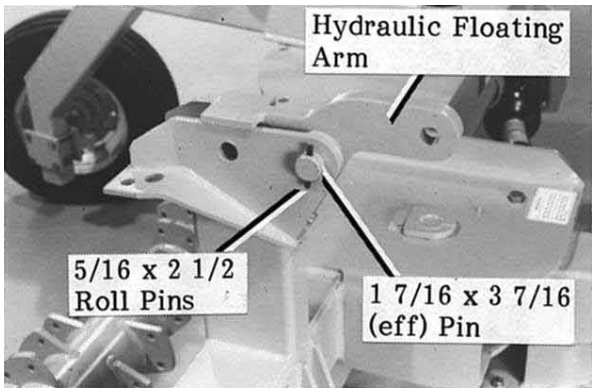

45. Raise spiral drum to allow installation of the three springs, eyebolts, and locknuts.

Tighten locknuts until approximately two threads of eyebolts protrude.

⚠ **CAUTION:** *Be sure no one is standing near when raising unit.*

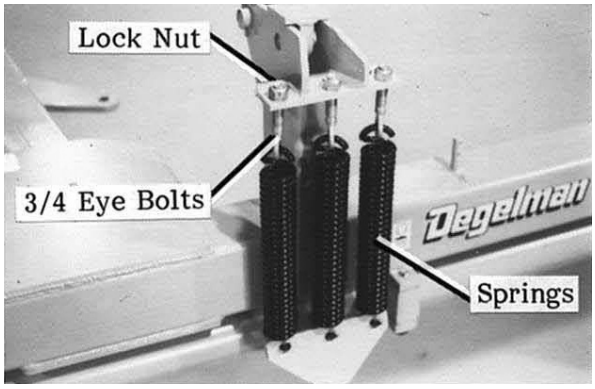

Locate floating arm lock pin (25.4 dia. x 95 mm effective) in storage hole.

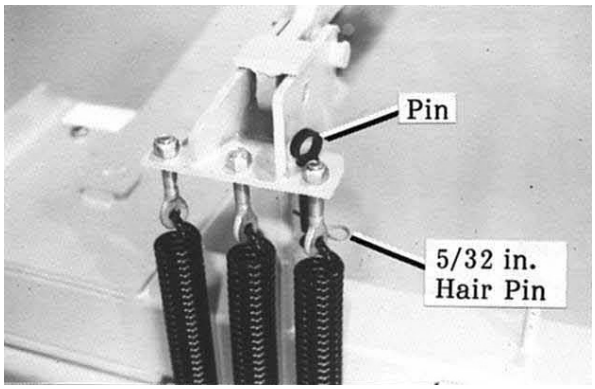

46. Assemble teeth to spiral drum using the special 5/8 x 1-3/4 in. Gr8 bolts and locknuts.

Note: Be sure to locate teeth on right hand side of drum plates.

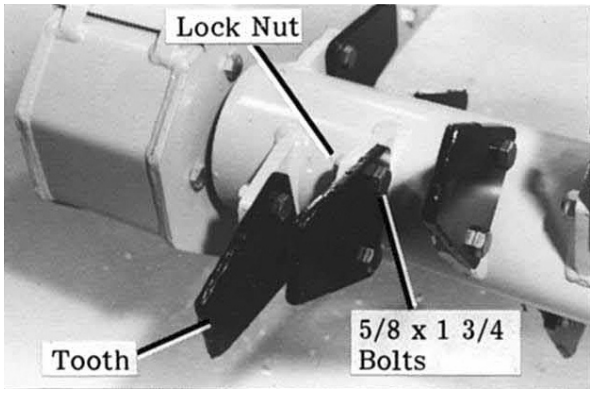

Torque these 5/8" tooth bolts to:
180 ft-lbs (245N.m).

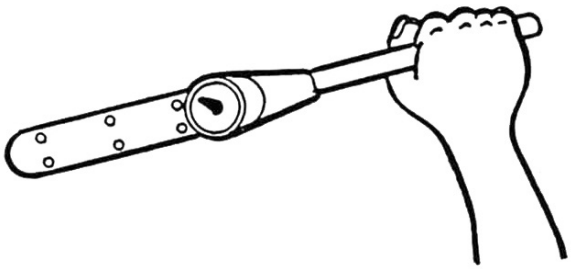

47. Subassemble the two flap straps on each side of rock guard flap (9 x 57 in.) along with the four bolts, lock washers and nuts at locations shown.

Note: Leave the 2nd hole from each side open.

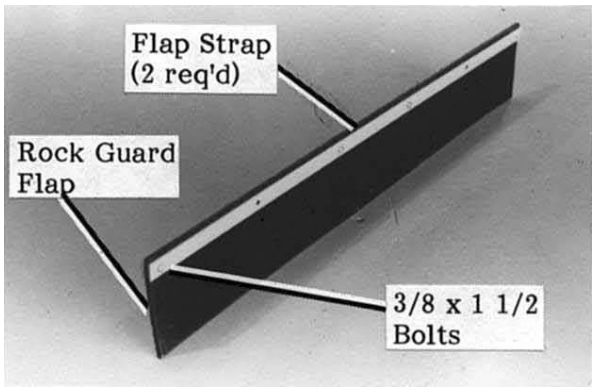

Attach rock guard unit to collars of rock shaft and secure with bolts, lock washers and nuts in the two remaining open holes.

Note: Be sure to install the drive shaft support bracket at this time, at location shown.

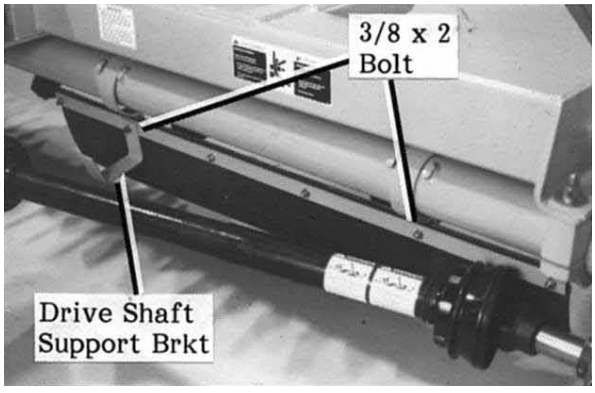

48. Position the rock guard flap against the stone guard bracket and secure with the bent bolt bar, two short bolt bars along with the bolts, lock washers and nuts shown.

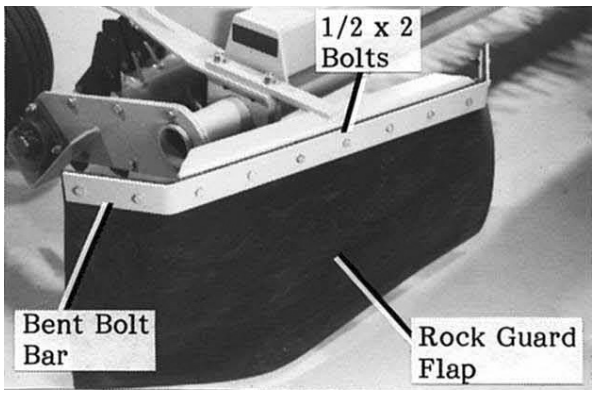

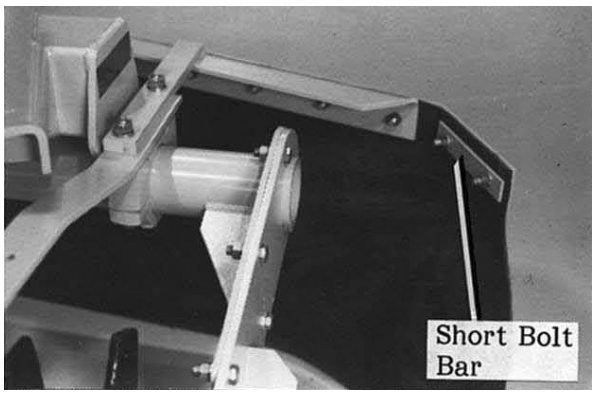

49. Secure the front PTO shield to hitch pole using the two bolts, flat washers, lock washers and nuts shown.

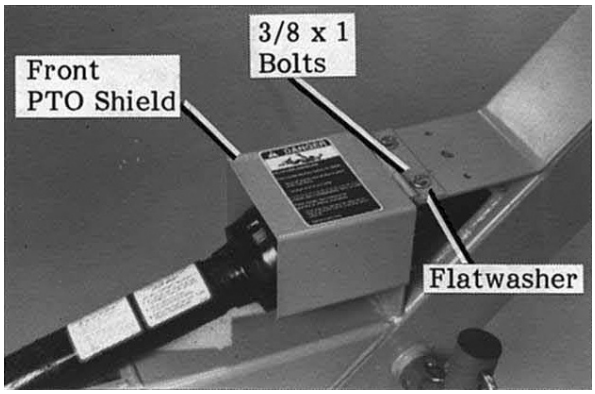

50. Secure the flexible hose holder to the hitch pole using the bolt, flat washer, lock washer and nut indicated.

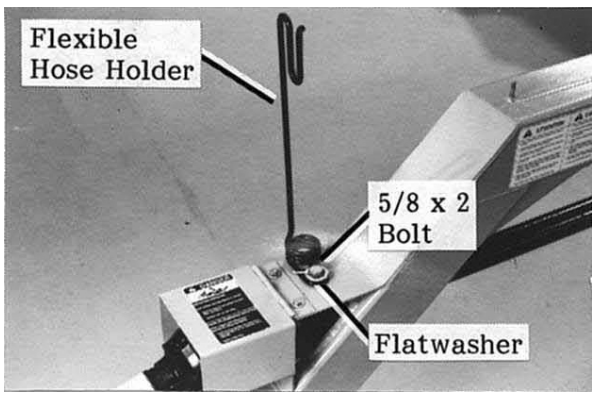

51. Remove the rear bolt holding gear box to pole and secure the support bar clip over this hole by reinstalling bolt.

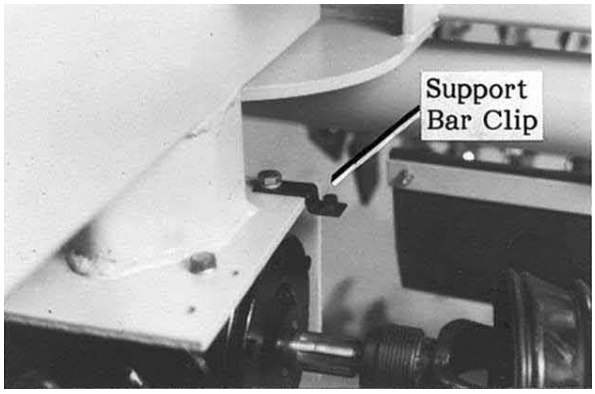

Install the folding gearbox shield and back-up clip, securing with two bolts, flat washers, lock washers and nuts shown.

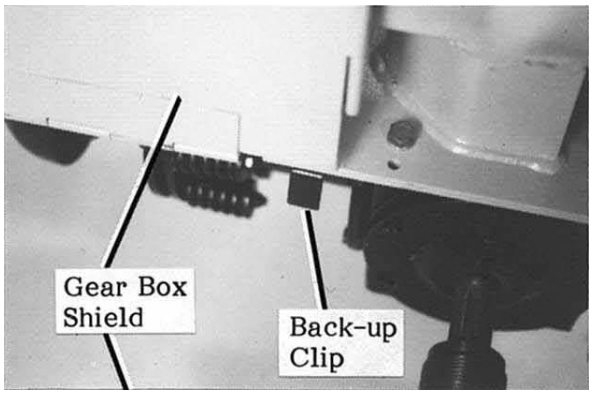

Fold the shield back and up over the pin on the support bar clip and secure with hair pin shown.

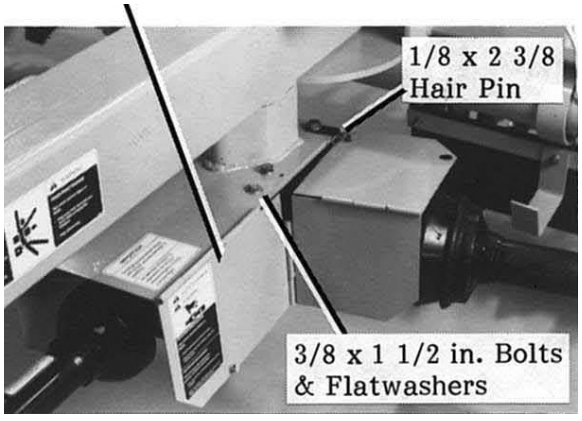

52. Install the chain case input shaft shield over the bolt threads protruding from the flange bearing. Secure the shield with the two jam nuts shown.

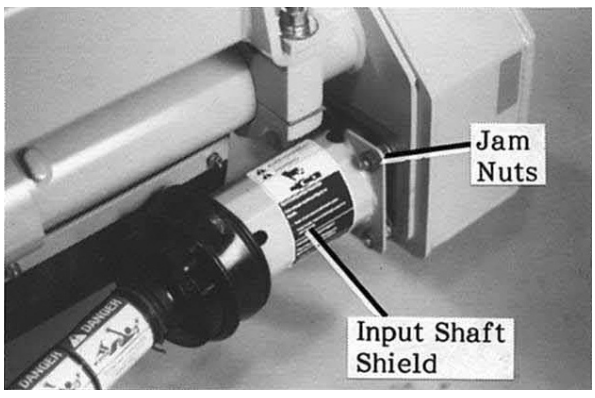

53. Mount the two remaining shield support brackets along beam at the approximate locations shown. Secure loosely using bolt bars (2 hole - 6-5/8 in. centers), bolts lock washers and nuts shown.

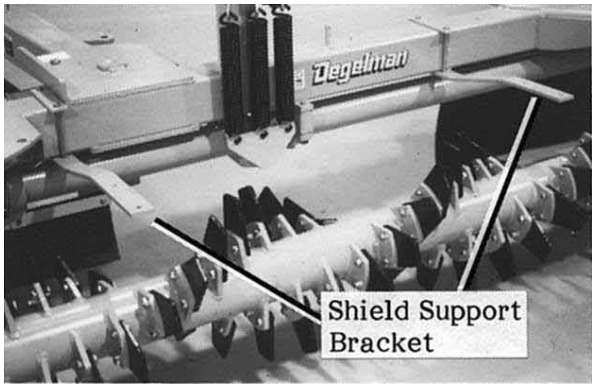

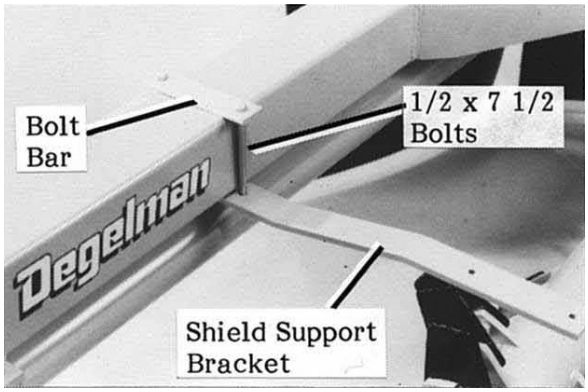

54. Start at the left hand side of machine and loosely assemble one of the three drum shields to the first two shield support brackets using bolts, lock washers and nuts at hole locations shown.

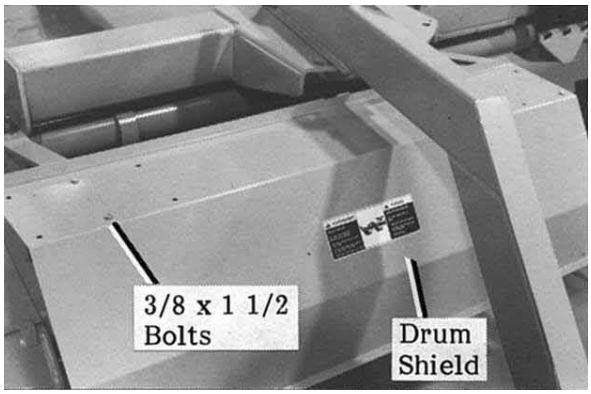

Align opposite end of drum shield to support bracket and insert the bolts only at this time

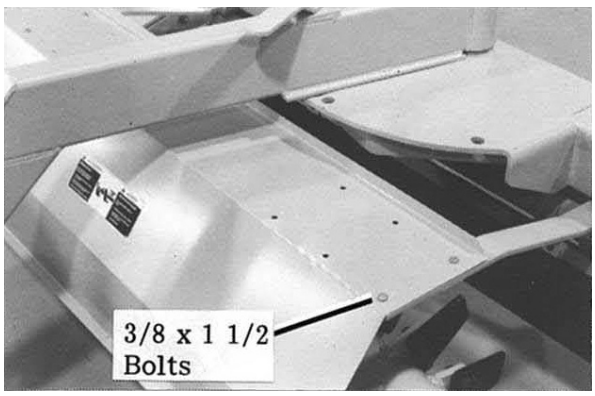

55. Slide a second drum shield under the first and align holes shown.

Secure shields with lock washers and nuts.

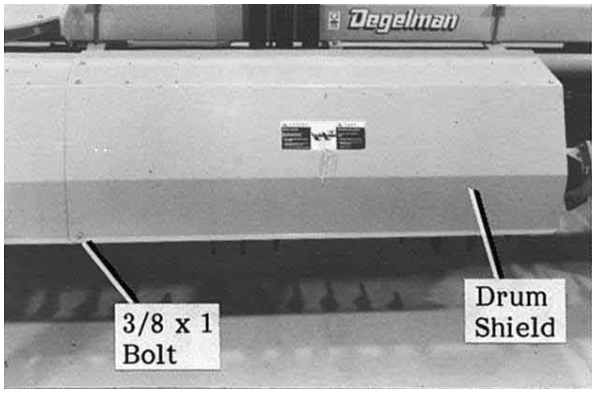

Align opposite end of drum shields to the support bracket by inserting the bolts only at this time.

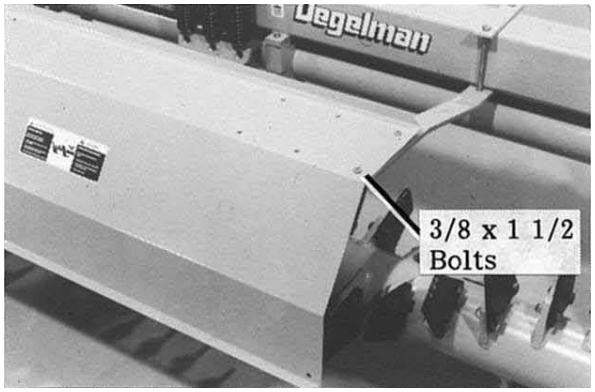

56. Slide the third drum shield under the second, aligning holes shown.

Secure shields with lock washers and nuts shown.

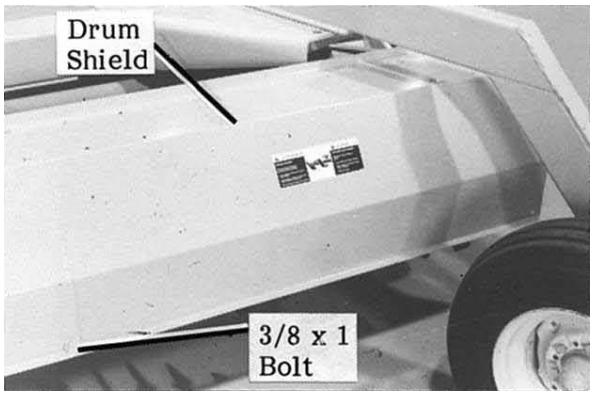

Secure the opposite end to support bracket.

Tighten all shield hardware left loose.

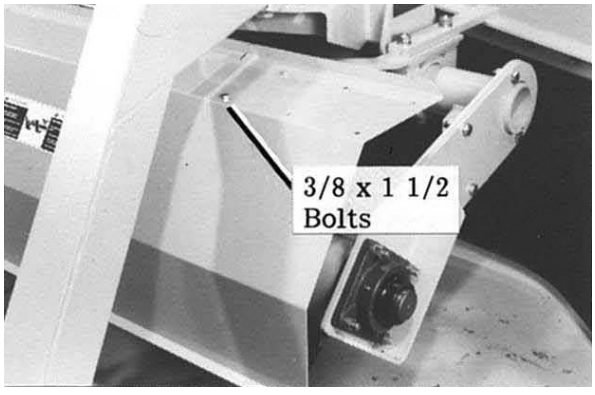

57. Mount the SMV sign to bracket using the two bolts, lock washers and nuts shown.

Position the unit over the stud welded to frame and secure with hair pin shown.

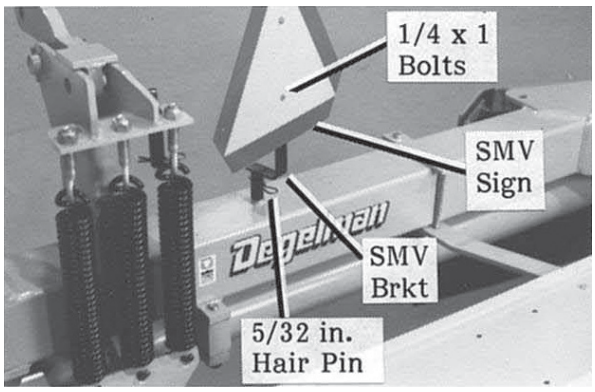

---

58. The Rock Rake is structurally complete and ready for installation of the optionally purchased hydraulics. If the customer is supplying the necessary hydraulics, follow steps as a guide line to help establish the necessary requirements of cylinders, hoses (2 wire braid) and fittings.

59. Connect the two 3 x 8 in. hydraulic cylinders as shown and install the appropriate fittings.

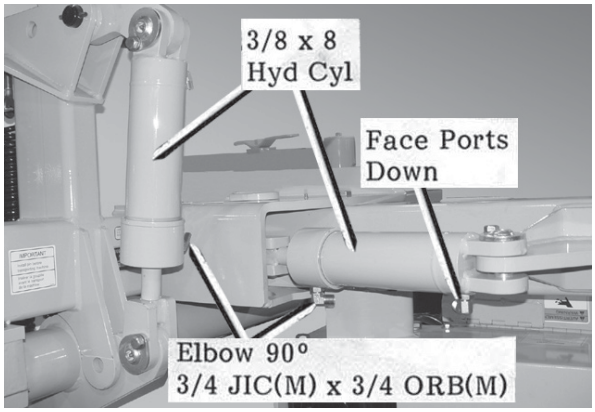

60. Connect appropriate length of hoses to hydraulic cylinders and route along hitch pole.

Secure hoses to pole using the 4 hose clip assemblies and appropriate hardware.

Also use the plastic hose ties as shown.

Note: Models with Hydraulic motor option requires 2 additional 3/4″ hoses that mount with *extra* hose holder assemblies.

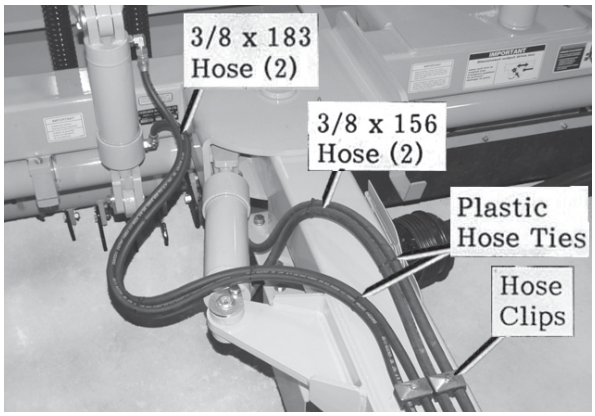

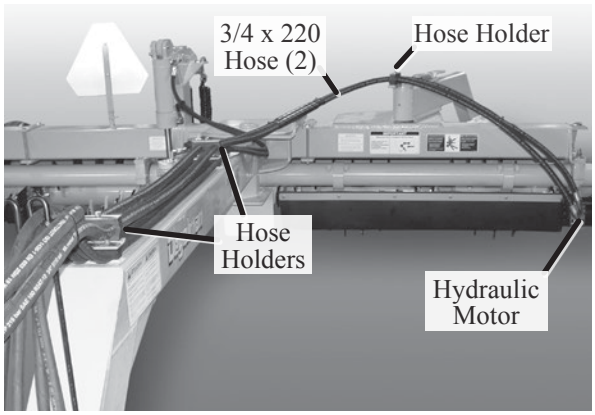

61. Press hoses into flexible hose holder.

Install the four remaining nipple fittings into the ends of hoses. (2 additional for Hydraulic Motor option)

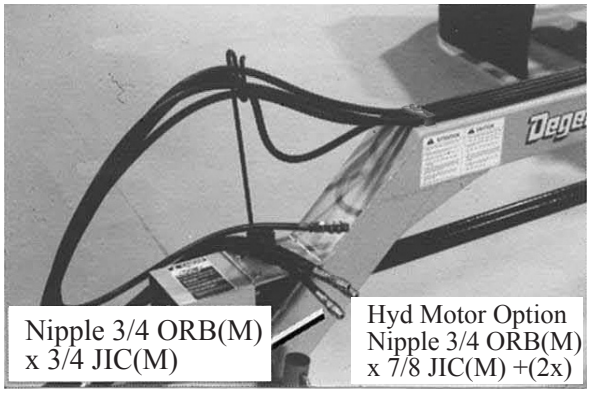

⚠ **IMPORTANT:** *Be sure to install the restrictor fitting to the end of the hose that leads from the base port of pole angling cylinder. This restrictor will slow down the angling speed of frame when swinging into transport, thus providing a safer operating environment.*

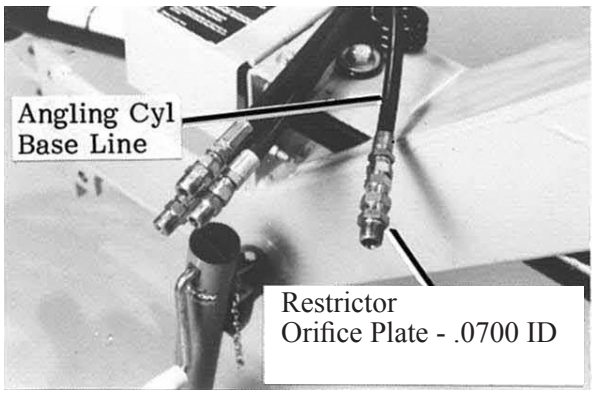

Attach the appropriate quick couplers (not supplied) to the ends of these fittings.

62. Secure the safety chain unit to front of pole as shown using the bolt, lock washer and nut shown.

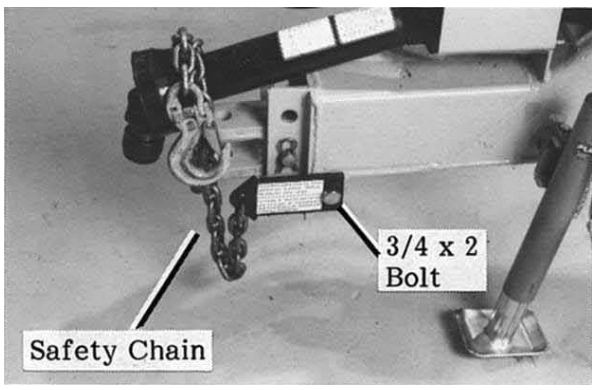

63. Check that all bolted connections have been tightened to the torque values shown on page #10.

Check and tighten all hydraulic fittings and hose connections.

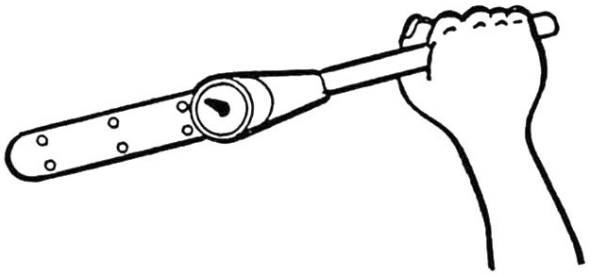

64. Lubricate all grease fitting locations as outlined in the Operator's section of this manual.



65. The machine is now fully assembled and ready for operation. Be sure to read and understand fully the Operator's sections of the manual before attaching machine to tractor.

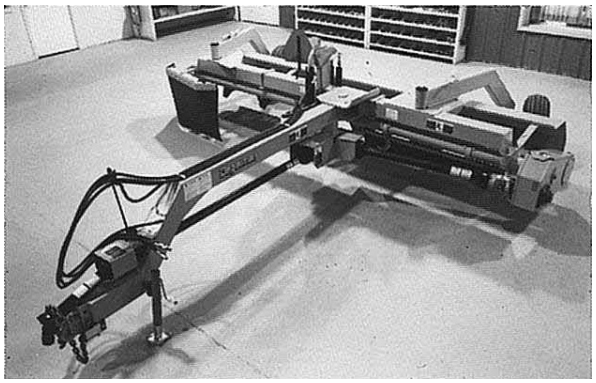

To the New Operator or Owner

The Degelman Model RR1500 Rock Rakes are designed to efficiently windrow rocks from 2 to 12 inches (50 to 300 mm) diameter. Many of the features incorporated into this machine are the result of suggestions made by customers like you.

It is the owner or operator's responsibility to read this manual carefully to learn how to operate the machine safely and how to set it to provide maximum efficiency. Safety is everyone's business. By following safe operating practices, a safe environment is provided for the operator and bystanders.

The manual will take you step by step through your working day. By following the operating instructions in conjunction with a good maintenance program, your Rock Rake will provide many years of trouble-free service.

OPERATING SAFETY

1. Read and understand the Operator's Manual before starting.
2. Lower rake, stop engine, place all controls in neutral, set park brake, remove ignition key and wait for all moving parts to stop before servicing, adjusting, repairing or unplugging.
3. Keep hands, feet, hair and clothing away from all moving and/or rotating parts.
4. Do not allow riders.
5. Clear the area of bystanders, especially small children before starting.
6. Keep all guards and shields in place.
7. Stay well back from machine when operating to prevent being hit by flying rocks. Keep others away.
8. Turn to the left when maneuvering to keep the tractor away from the plane of flying rocks.

Principles of Operation

The machine has a rotating drum that has a spiraling set of teeth bolted to it. As the drum rotates and the machine moves along the field, the teeth move the rocks along the front of the drum to form a windrow of rocks on the right side.

The drum is turned by the PTO from the towing vehicle.

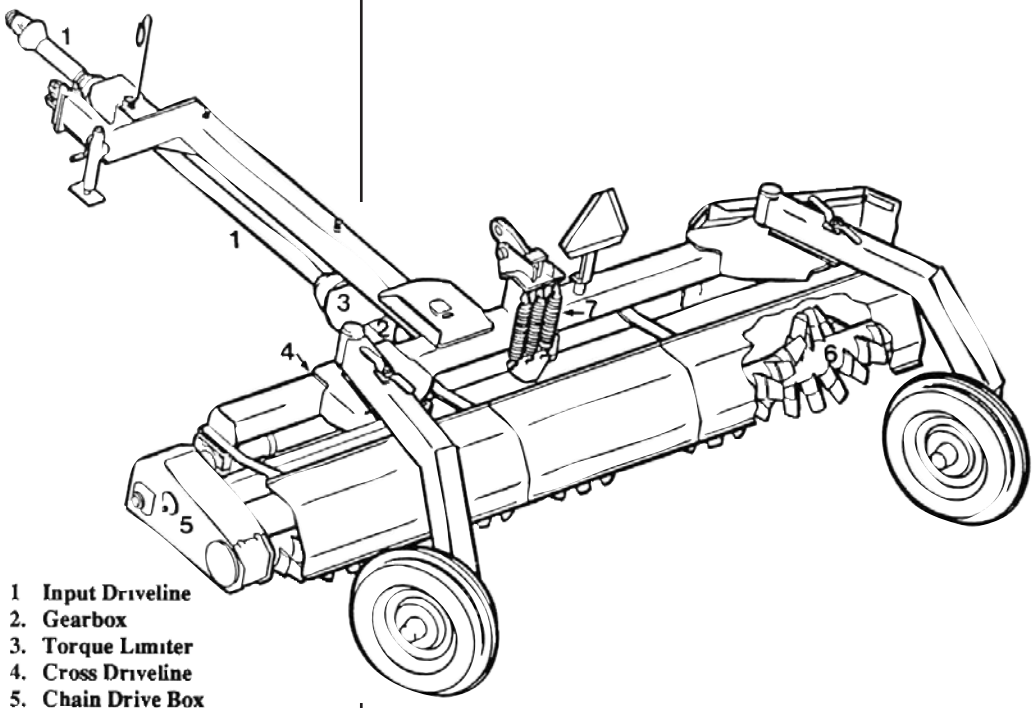

1 Input Driveline
2. Gearbox
3. Torque Limiter
4. Cross Driveline
5. Chain Drive Box
6. Rake Drum
7 Suspension System

Break-In

Although there are no operational restrictions on the Rake when it is new, there are some mechanical checks that must be done to insure the long term integrity of the unit. When using the machine for the first time, follow this procedure:

⚠ **IMPORTANT:** *It is extremely important to follow all of the Break-In procedures especially those listed in the "Before using" section below to avoid damage:*

.

A. Before using:

1. Read Safety Info. & Operator's Manual.
2. Lubricate all grease points.
3. Check all nuts, bolts, capscrews, and other hardware.
4. Add oil to the gearbox.
5. Add oil to the chaincase.
6. ⚠ Perform RUN IN of modular clutch (pg.78).

B. After operating for 2 hours:

1. Retorque wheel bolts to the specified values.
2. Check all hardware. Tighten as required.
3. Check all hydraulic system connections. Tighten if any are leaking.

C. After operating 10 hours:

1. Repeat the checks outlined in Step B.
2. Then go to the service schedule as outlined in the Maintenance Section.

D. After operating 100 hours:

1. Drain the oil from the gearbox.
2. Replace with SAE 85W90 gear oil.
3. Replace oil again at 2500 hours.

Pre-Operation Checklist

Efficient and safe operation of the Rock Rake requires that each operator reads and understands the operating procedures and all related safety procedures outlined in this manual. A pre-operational checklist is provided for the operator. It is important for both personal safety and maintaining the good mechanical condition of the Rake that this checklist be followed.

Before operating the machine and each time thereafter, the following areas should be checked off:

1. Lubricate the machine per the schedule outlined in the "Maintenance Section".
2. Use only a tractor of adequate power and weight to handle the Rake.
3. Ensure that the machine is properly attached to the tractor using a drawbar pin with provisions for a mechanical retainer. Make sure that a retainer such as a Klik pin is installed.

   NOTE: *It is important to pin the draw bar in the central location only.*
4. Ensure that a safety chain on the hitch is installed.
5. Check the roller chain and sprockets for proper alignment and tension. Adjust for tension as required.
6. Check oil level in the tractor hydraulic reservoir. Top up as required.
7. Inspect all hydraulic lines, hoses, fittings and couplers for tightness. Tighten if there are leaks. Use a clean cloth to wipe any accumulated dirt from the couplers before connecting to the tractor's hydraulic system.
8. Inspect all moving and rotating parts. Remove any debris that has become entangled in them.
9. Check the oil level in the gearbox. Top up as required.
10. Check the oil level in the chain drive reservoir. Top up as required.
11. Make sure that all guards and shields are installed and secured in position.
12. Insure that the PTO driveline is securely attached on both ends and can telescope easily.
13. Check that the PTO driveline shield rotates freely.
14. Check the tire and insure that they are inflated to the specified pressure: 32 psi (220kPa).

Tractor Preparation

Follow this procedure when selecting and preparing a tractor for use with the machine:

1. Use only a tractor of sufficient power and weight to adequately handle the machine. It is recommended that the tractor have at least 50 PTO horsepower for normal operating conditions and 70 PTO horsepower when operating in hilly conditions.

2. The drawbar pin to PTO shaft end dimension should be:

   a. 16 inches (406mm) for 1000 RPM speed.

   b. 14 inches (356mm) for 540 RPM speed.

IMPORTANT: *Do not use on a tractor equipped with a PTO adapter to prevent mismatching of PTO speeds and over telescoping of the driveline.*

3. Locate the drawbar in its center position to prevent it from swinging.

4. Use only a drawbar pin with provisions for a mechanical retainer such as a Klik pin. Always install the retainer.

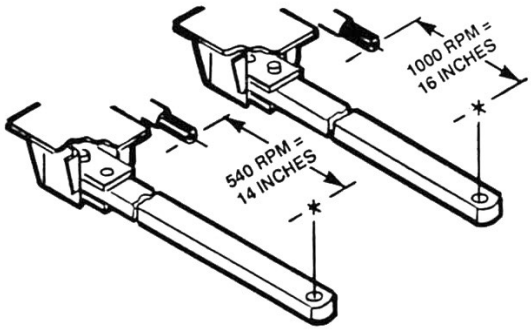

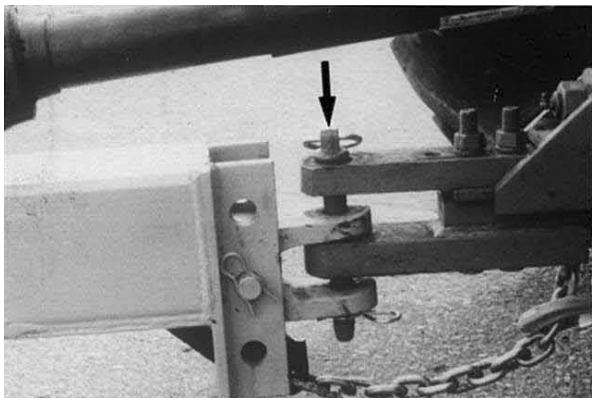

5. Always attach a safety chain between the tractor and the machine to prevent unexpected separation.

6. It is not recommended to use a tractor that is equipped with duals. Tires drive over the rocks, push them into the ground and make them difficult to pick up with the Rake. In many cases, the spacing of the outer dual creates a tire track where the rock windrow is placed. This compacted tire track makes picking more difficult.

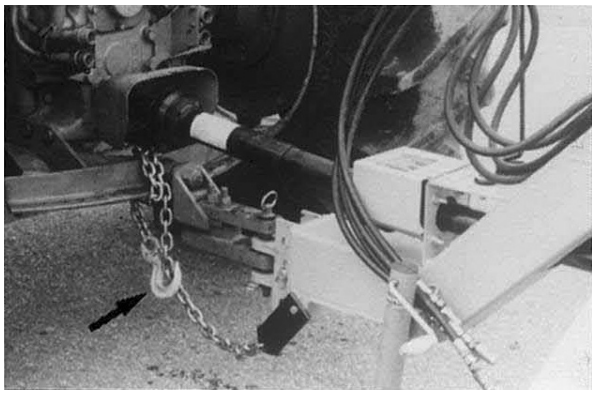

Rock Rake Preparation

Follow this attachment and preparation procedure at all times:

1. Clear the area of bystanders, especially small children, before starting.

2. Be sure there is enough room to back the tractor up to the machine.

3. Start the tractor and slowly back it up to the hitch point.

4. Stop the tractor, place all controls in neutral, set park brake and remove ignition key before dismounting.

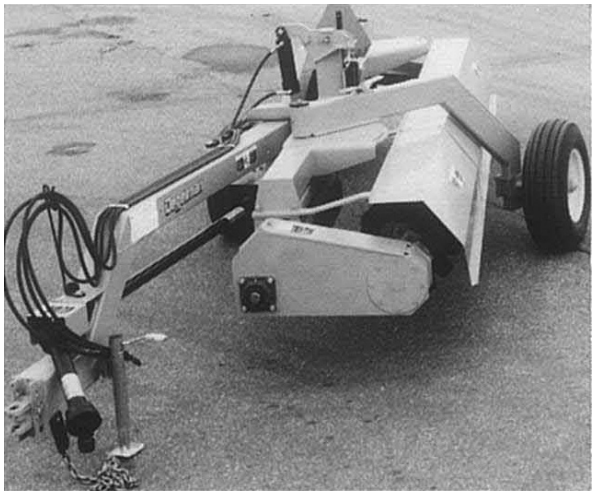

5. Adjust the length of the drawbar between the PTO shaft and drawbar pin hole. Refer to the tractor Operator's Manual

6. Use the hitch pole jack to raise or lower the hitch to align with the drawbar.

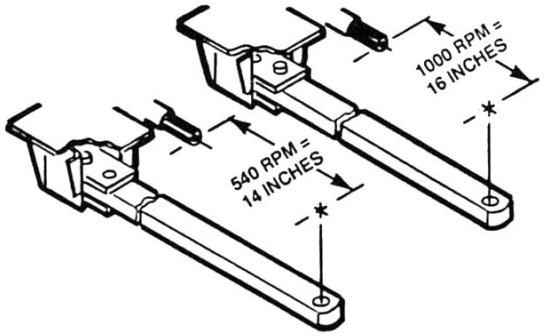

7. Install a drawbar pin with provisions for a mechanical retainer such as a Klik pin. Install the retainer.

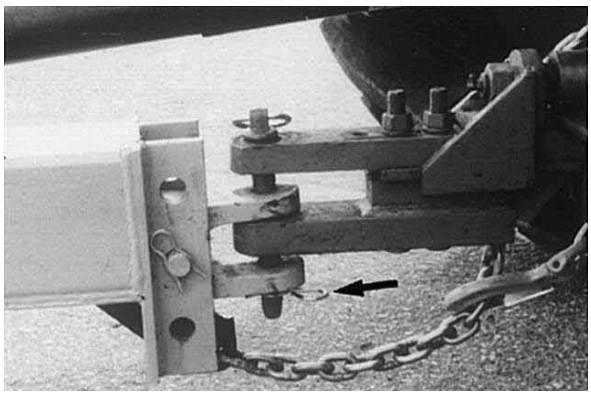

8. Use the pin through the hitch clevis to provide a level hitch pole or one that is parallel to the ground.

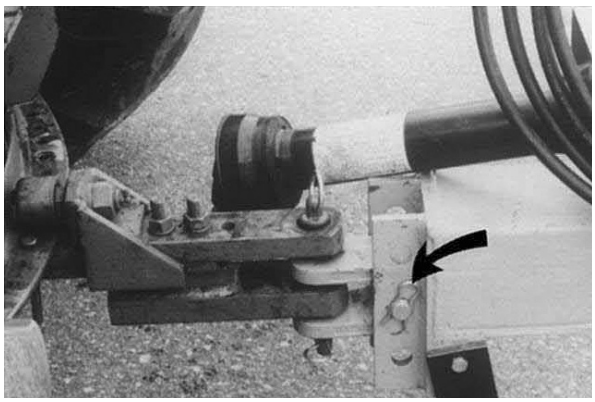

9. Install a safety chain between the tractor drawbar cage and the hitch pole.

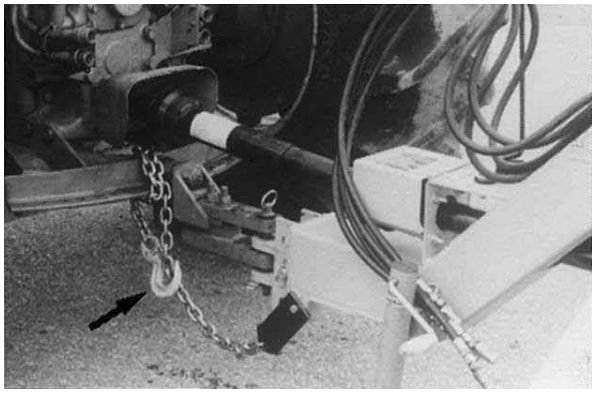

10. Attaching PTO driveline:

    a. Check that the driveline telescopes easily and that the shield rotates freely.

    b. Attach the driveline to the tractor shaft by retracting the locking collar, slide the yoke over the shaft and pushing on the yoke until the locking pin clicks into position. Be sure the yoke is locked on the shaft.

⚠ **IMPORTANT:** *The RUN IN procedure for the modular clutch needs to be performed on all new clutches and clutches that have not been operated for one (1) season or approximately sixty (60) days. This procedure can be found on page 78.*

11. Connect the hydraulics:

    a. Use a clean cloth or paper towel to clean the couplers on the ends of the hoses. Also clean the area around the couplers on the tractor.

    b. Remove the plastic plugs from the couplers and insert the male ends. Be sure to match the high and return pressure lines to one valve bank.

    c. Connect all the couplers. Be sure to match the system to the desired control lever in the tractor.

    NOTE: *If the direction of motion is wrong, reverse the couplers.*

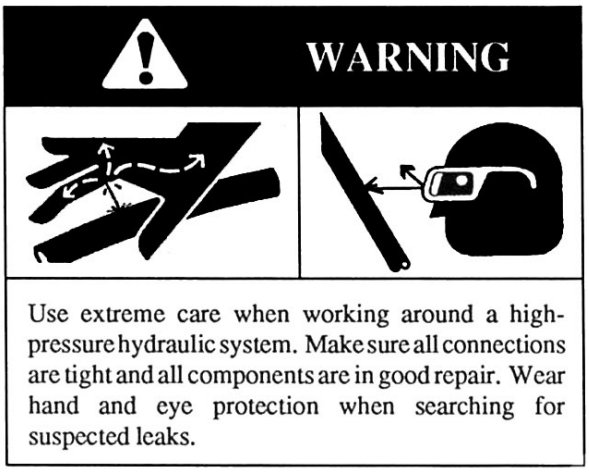

12. Press the hoses into the flexible hose holder to secure them from dragging or becoming entangled in the moving parts. Provide sufficient slack for turning.

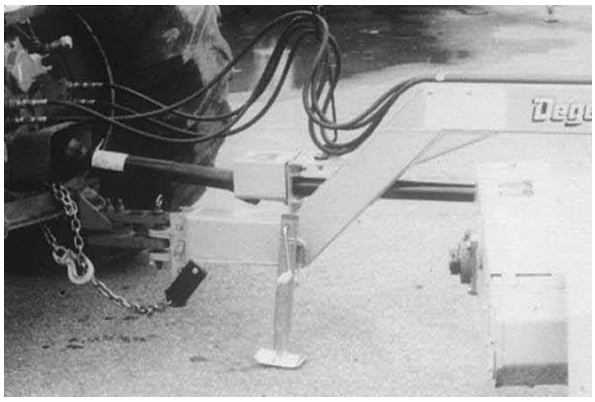

13. Raise the Jack and rotate it 90° to place in its stowed position.

14. When unhooking from the tractor, reverse the above procedure.

15. Place the machine into the configuration appropriate for the planned use. Refer to Pg.44-51 for configuration conversion procedures.

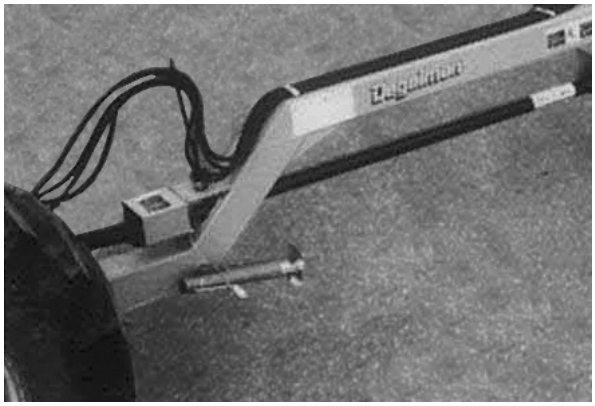

Machine Positioning

The machine has three distinct configurations: field, narrow transport, and wide transport. This section gives the procedures to convert from one configuration to another. Review the appropriate section before starting to ensure that the conversion is done safely and efficiently.

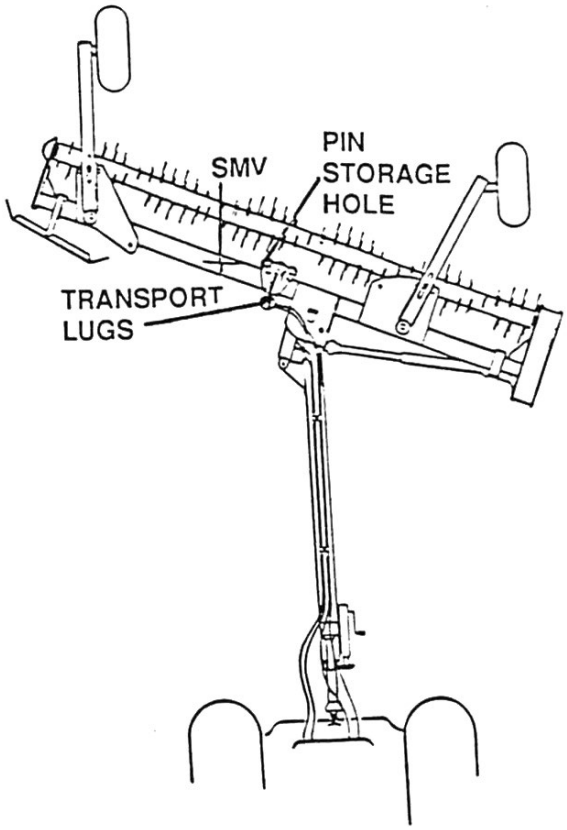

FIELD POSITION TO WIDE TRANSPORT

When travelling distances are short and there are no closely spaced obstacles, the machine can be placed in a semi-transport configuration for moving. To convert from field position to a wide transport configuration, follow this procedure:

1. Attach a tractor to the unit by following the procedure outlined on pg. 41.

2. Raise the spiral drum to its maximum up position.

3. Remove pin from storage position hole and insert through the transport lugs to hold spiral drum in the raised position.

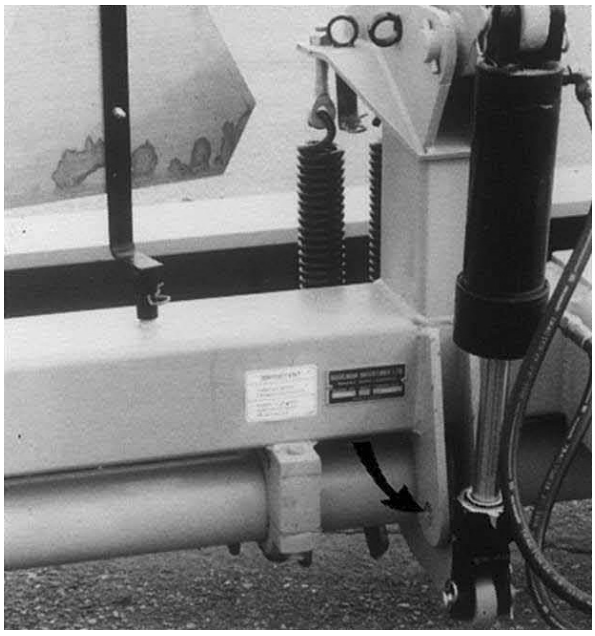

4. Check to make sure the "Slow Moving Vehicle (SMV)" emblem is facing the rear in line with the wheels.

WIDE TRANSPORT TO FIELD POSITION

1. Attach a tractor to the unit by following the procedure outlined on pg. 41.

2. Remove pin through transport lugs and place in its storage position.

3. Lower Spiral drum into its working position.

4. Swing the frame back into the field position.

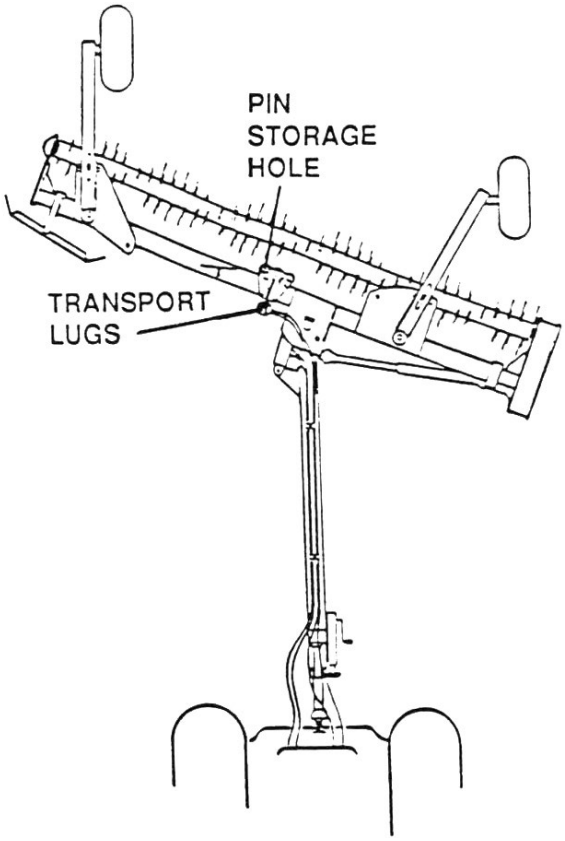

FIELD POSITION TO NARROW TRANSPORT

When it is necessary to move the machine a long distance or through narrow gates or bridges, it can be folded up so it is narrower than the tractor. To fold into narrow transport configuration, follow this procedure:

1. Attach a tractor to the unit by following the procedure outlined on pg. 41.

2. Fold back and pin the hinged shield over the cross driveline yoke.

3. Disconnect the driveline from the output shaft of the gearbox.

4. Compress the driveline and lay it in the storage bracket. The neck of the bell should support the driveline in the bracket.

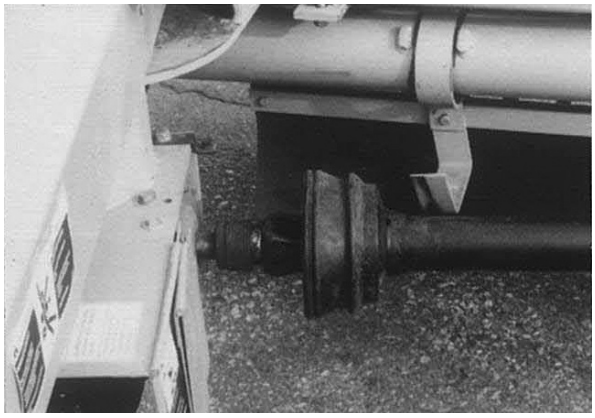

IMPORTANT: *It is important to disconnect the driveline (mentioned above) to avoid possible damage.*

5. Remove safety stop bolt.

6. Retract cylinder to position spiral drum at right angles to hitch pole.

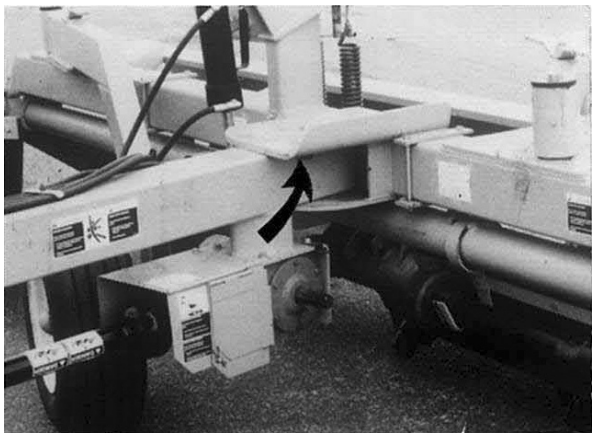

7. Remove suspension lock pin from its storage hole and install through floating arm.

8. Lower spiral drum to the ground and raise the wheels off the ground.

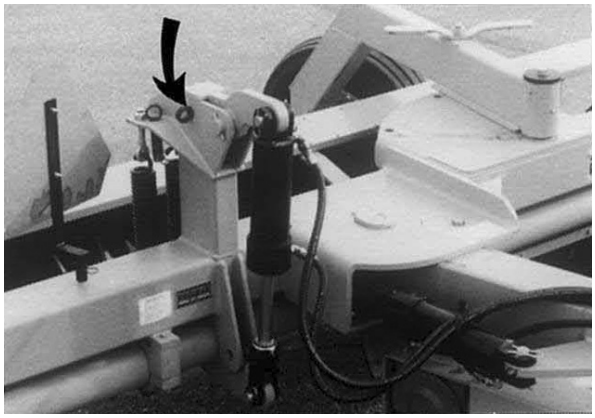

9. Remove wing nut and bolt through each wheel leg.

10. Swing each wheel leg into its narrow transport position. Reinstall the bolts and tighten the wing nuts.

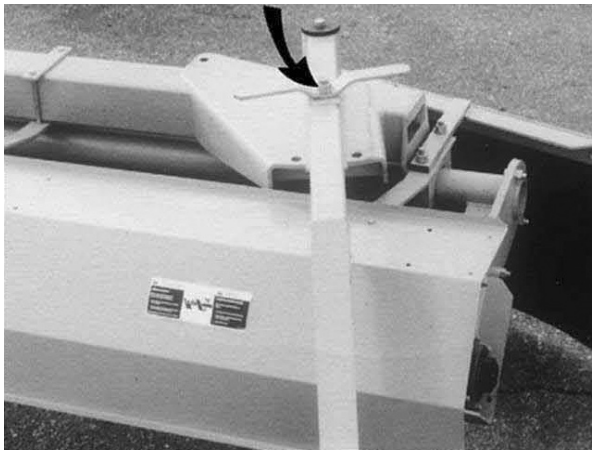

11. Raise spiral drum to its highest position.

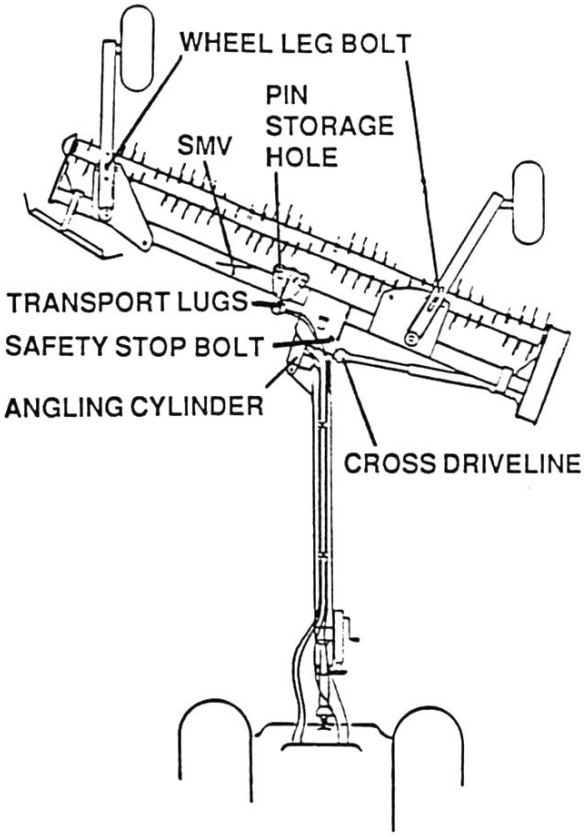

12. Remove pin from storage hole and insert through transport lugs to hold spiral drum in raised position.

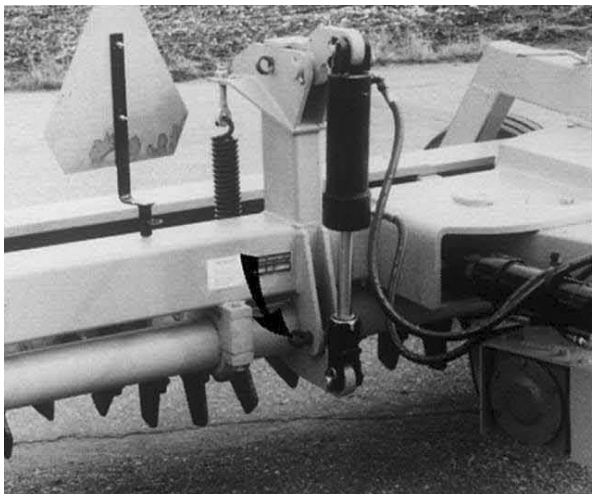

13. Extend hitch angling cylinder to move frame into the narrow transport configuration.

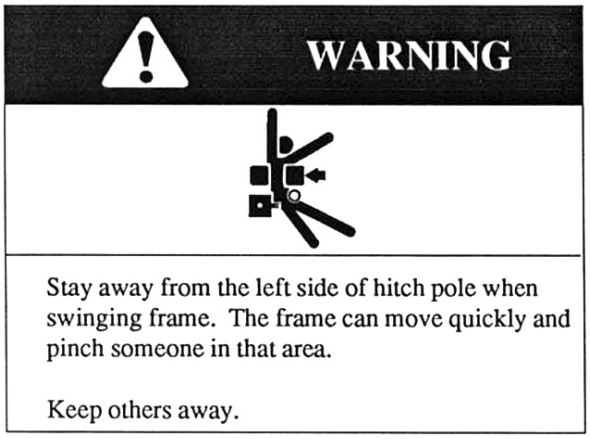

14. Reinstall safety stop bolt.

15. Check to make sure the SMV (Slow Moving Vehicle) emblem is facing the rear.

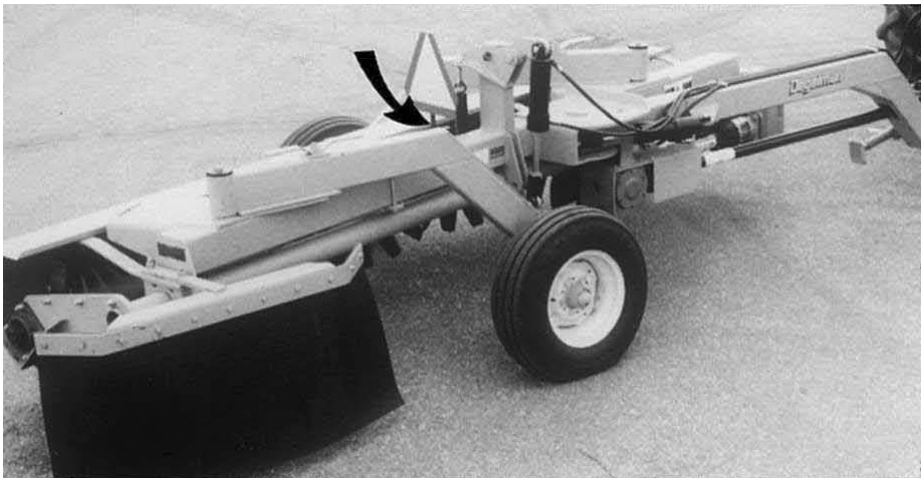

NARROW TRANSPORT TO FIELD POSITION

When changing from narrow transport to field configuration, follow this procedure:

1. Attach a tractor to the unit by following the procedure outlined on pg. 41.

2. Remove safety stop bolt.

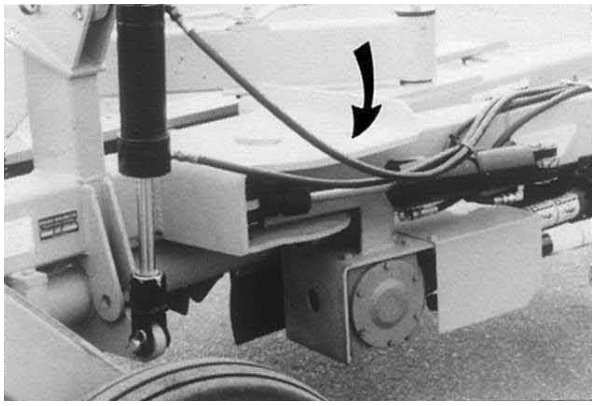

3. Retract hitch angling cylinder to position spiral drum square to the hitch pole.

WARNING

Stay away from the machine when adjusting the hitch pole angle.

Keep others away.

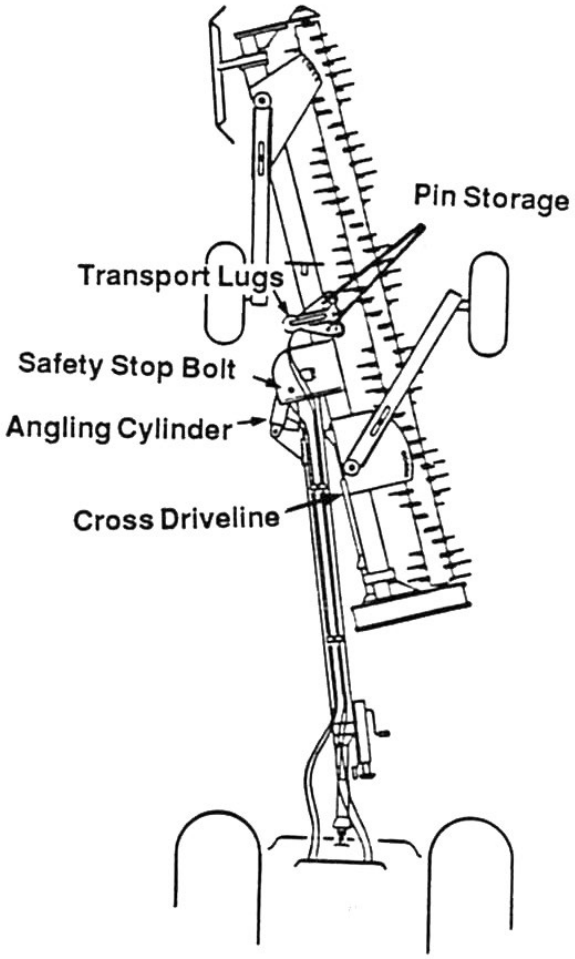

4. Remove pin from transport lugs and place in storage hole.

5. Lower spiral drum to the ground and raise the wheels.

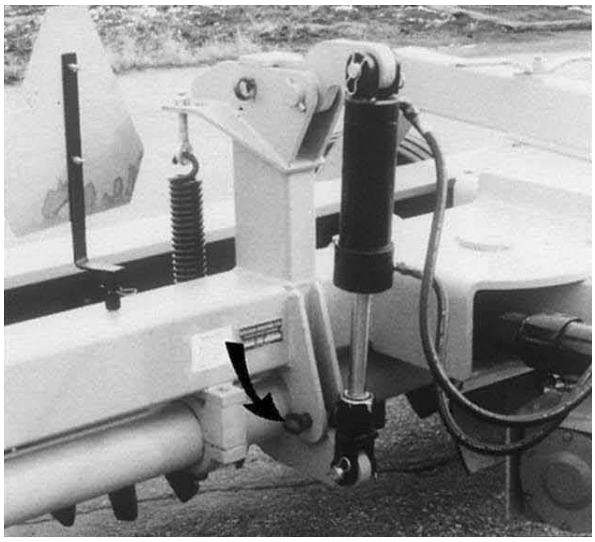

6. Remove the wing nut and bolt through each wheel leg.

7. Swing each wheel leg into its field position. Reinstall wheel leg bolt and tighten wing nut.

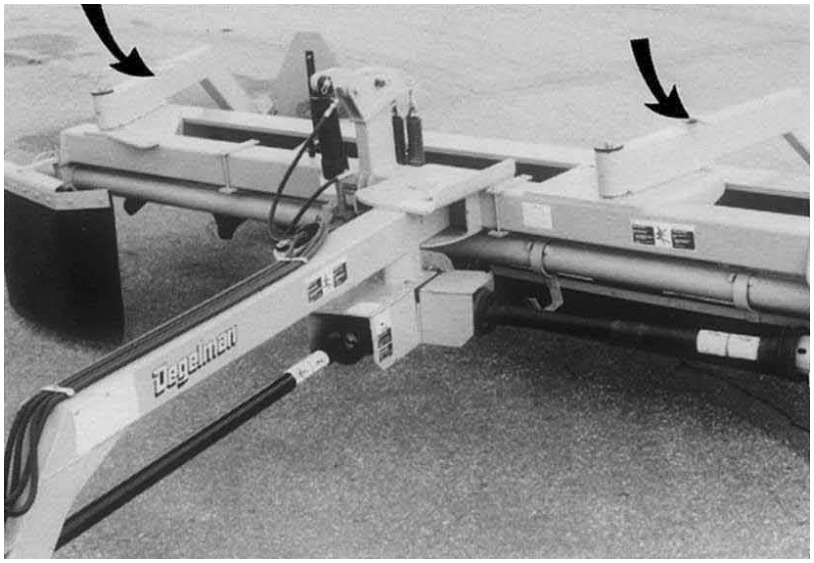

8. Raise spiral drum to lower wheels to the ground.

9. Remove pin through floating arm and place pin in storage hole.

10. Install safety stop bolt.

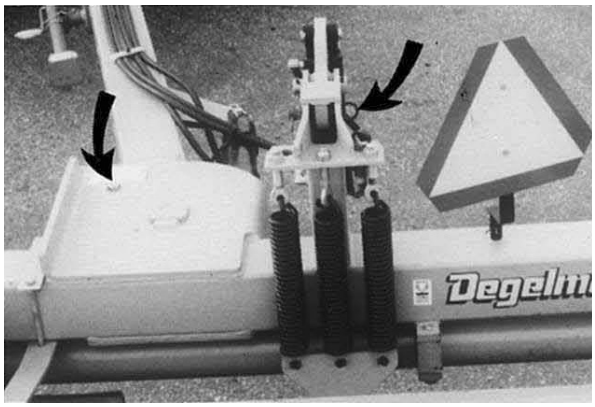

11. Remove the cross driveline from the storage bracket and install on the gearbox output shaft.

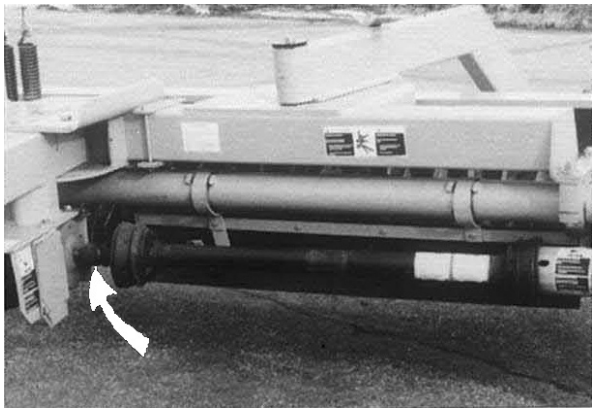

12. Unfold and pin the hinged shield covering the cross driveline yoke.

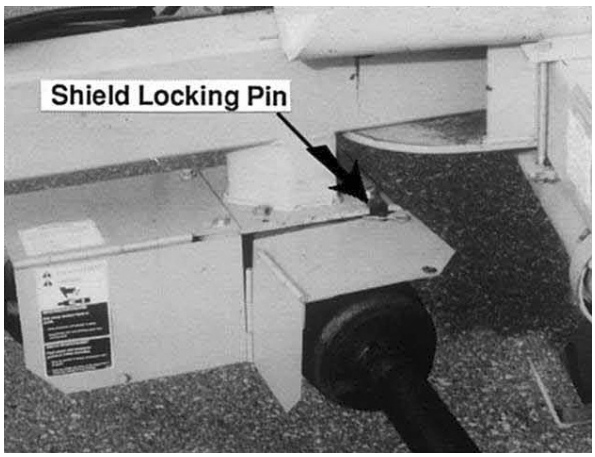

13. Adjust the hitch pole to the appropriate angle for the work to be done.

WARNING

Stay away from the machine when adjusting the hitch pole angle.

Keep others away.

Operating

Familiarize yourself with the various settings of the Rock Rake that are designed to allow the machine to work in a variety of field conditions. Field experience will indicate the combination of machine and operating condition to give a quality job. This section will cover the interaction of the field conditions and machine settings.

1. Operator's Responsibility

Every operator should read this manual and be instructed in safe operating procedure. An untrained operator is not qualified to operate this machine and could place themselves or bystanders in danger.

2. Field Conditions

a. Rock Density

Rate the rock density as light, medium or heavy. Normally the machine ground speed will decrease as the rock density increases to insure that the teeth on the spiral drum have the opportunity to make contact with each rock.

b. Soil Condition

Dry, firm ground is ideally suited for raking.

Soft ground will require adjustments to the angling of the spiral drum to insure that the soil can fall between the teeth on the right end and not be moved into the windrow. It may also be necessary to have a lighter suspension system setting.

Wet soil will ball up with the rocks and can plug the teeth. Give the soil more time to dry before raking.

It is recommended that the teeth on the left end of the drum penetrate the ground about 1 inch (25mm). Soft soil conditions require a lighter floatation; Hard soil a heavier floatation. (Refer to page 66).

c. Rock Size:

2-4 inches (51-102mm) Small
5-8 inches (127-204mm) Medium
9-12 inches (230-306mm) Large

Note: *The occasional rock between 12-18 inches can be raked but heavy concentrations or rocks in this range must be removed from the filed and not windrowed.*

3. Machine Settings

a. Racking Angle

The raking angle is defined as the angle of the spiral drum as it moves down the field.

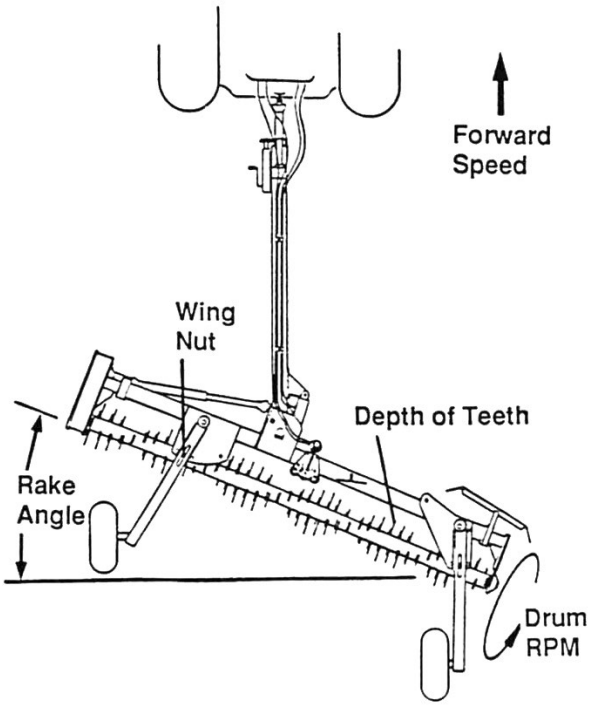

This angle controls the amount of lateral movement given to a rock when contacted by the teeth. The normal setting should be in the center hole to give a drum angle of 20°. Other working angles are available to handle unusual field conditions.

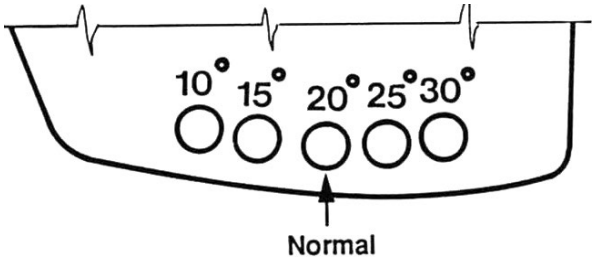

b. Depth of Teeth

The springs and hydraulic cylinder in the center of the machine control the effective ground contact pressure of the spiral drum.

The floating arm pin is removed for normal field operation and the springs can carry the weight of the spiral drum.

Normally three springs with minimum tension are used to provide flotation. Refer to page 66 to set spring tension.

It is recommended that the teeth on the left end of the drum penetrate the ground about 1 inch (25mm). Soft soil conditions require a lighter floatation; Hard soil a heavier floatation. (Refer to page 66).



c. Drum Rotation

The drum rotates at 170 RPM when the tractor PTO speed is 540 RPM. Changing the engine speed changes the drum RPM. It is recommended that the PTO/Drum speed always be run at rated RPM and the ground speed be varied by changing gears in the tractor.

A drum speed of 170 RPM will form the best rock windrow for gathering with a Degelman Rock Picker.

d. Forward Speed

The recommended ground speed varies from 2 to 6 mph (3.2-9.7 km/h) and is determined by rock density and size. When you see that rocks are being missed behind the machine, slow down. Increase the speed when the rock density decreases.

e. Spiral Drum Angle

The angle that the spiral drum makes when it contacts the ground is defined as the spiral drum angle. It can be varied by moving the wheel mount clamps on the end of each wheel leg.

It is recommended that the right end of the drum be set 1 to 1-1/2 inches (25-40mm) higher than the left end. Refer to page 68). This will allow the soil picked up with the rocks to fall through the teeth at the right end and not become part or the rock windrow. Picking will be much easier when the windrow does not include soil.

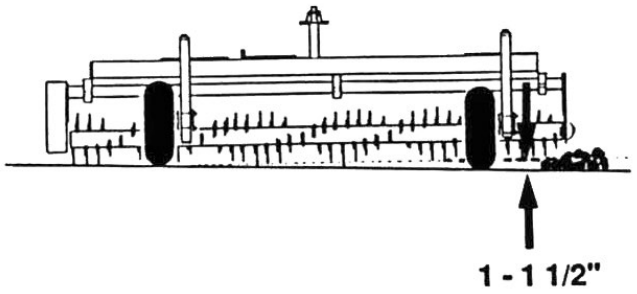

4. Attach the machine to a tractor by following the procedure on page 41.

5. Review and follow the Pre-Operation Checklist.

6. Convert the machine to the field configuration by referring to Machine Positioning Section starting on page 44.

7. Set the machine parameters to reflect the field operating conditions.

8. The Rock Rake is designed to move widely spaced rocks into a windrow to allow for easy and convenient picking. Picking from a windrow takes much less time than driving all over a field.

9. Rock Windrows can be formed on a once over basis or doubled up depending on the rock density. A windrow should not be made so large that a picker cannot handle it.

10. Double windrows can be formed by picking up a light existing windrow with the left end of the drum and raking it to the right.

The second method for doubling up on windrows is going up the field turn around and rake the rocks over into the previous windrow.

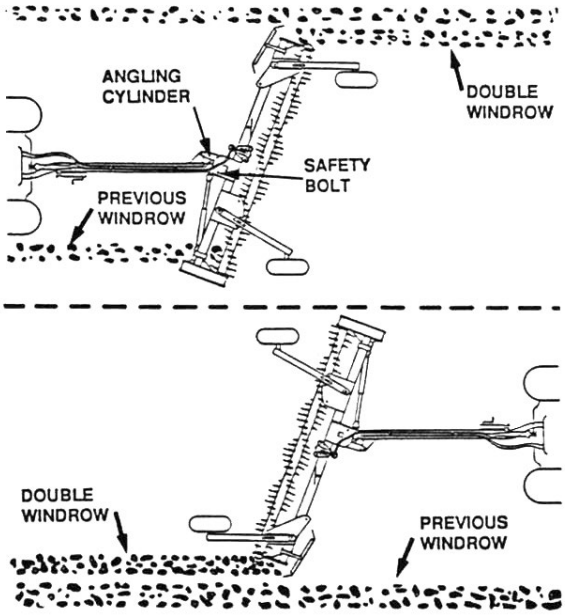

11. It is recommended that the machine be shifted laterally with the hydraulic angling cylinder when putting two windrows together. In this way the windrow will not interfere with the tractor wheels.

CAUTION

Be sure the safety bolt is in place and secured before shifting the pole.

12. When starting to work, lower the spiral drum to the ground with the hydraulic cylinder and let the suspension system springs pick up the weight.

The floating arm should be in the center of its working range. Extend or retract the cylinder to give the required angle. This will allow the drum to float over obstacles or ground contours during operation.

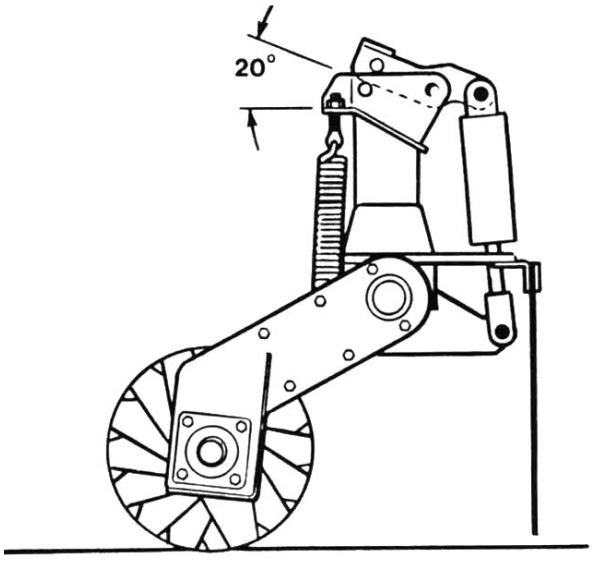

13. Pass over the field until the areas of the field with the rocks has been windrowed.

Transporting

The machine is designed to provide two different configurations for transporting: wide and narrow transport. Review the Machine Positioning Section on page 44 on the safe procedure to convert configurations.

When preparing to transport, follow this procedure:

1. Attach tractor to the machine by following the procedure on page 41.

2. Convert the machine into the configuration appropriate for the transport route.

3. Be sure the safety lock pin in the center frame and the floating arm lock pin are installed.

4. Be sure the SMV sign is facing to the rear.

5. Clean the SMV sign, lights, and reflectors.

6. Always use the hazard flashers on the tractor when transporting.

7. Slow down and pull off to the side of the road when meeting other traffic.

8. Do not exceed 20 mph (32 km/h) when transporting. Never exceed a safe travel speed. Slow down when cornering or on rough roads.

9. Do not allow riders on the machine or tractor when transporting.

TRANSPORT SAFETY

1. Use only a drawbar pin with a mechanical retainer.
2. Always install the safety chain between the drawbar and hitch pole.
3. Clean the SMV, lights and reflectors before starting.
4. Always use hazard flashers on the tractor.
5. Install the safety lock pin in the center frame and the suspension system pin before transporting.
6. Travel at a safe speed. Use care when making corners or meeting traffic.
7. Do not exceed 20 mph (32 km/h).
8. Do not allow riders.

Storage

After the season's use, completely inspect all major systems of the machine. Repair or replace any worn or damaged components to prevent unnecessary down time at the beginning of next season. The machine should be carefully prepared for storage to insure that all dirt, mud, debris and moisture has been removed.

Follow this procedure when preparing for storage:

1. Wash the entire machine thoroughly using a water hose or pressure washer to remove all dirt, mud debris or residue.

2. Inspect all moving or rotating parts to see if anything has become entangled in them. Remove the entangled material.

3. Lubricate all grease fittings to remove any moisture in the bearings.

4. Run the machine slowly for 1 minute to distribute lubricant to all surfaces.

5. Inspect all hydraulic hoses, fittings, lines and couplers. Tighten any loose fittings. Replace any hose that is badly cut, nicked or abraded or is separating from the crimped end of the fitting.

6. Touch up all paint nicks and scratches to prevent rusting.

7. Oil the exposed rams on the hydraulic cylinders to prevent rusting.

8. Select an area that is dry, level and free of debris.

9. Follow the procedure given on page 41 when unhooking.

STORAGE SAFETY

1. Store in an area away from human activity.
2. Do not allow children to play on or around the stored unit.

Service

FLUIDS AND LUBRICANTS

1. Grease
Use an SAE multi-purpose high temperature grease with extreme pressure (EP) performance. Also acceptable is an SAE multi-purpose lithium base grease.

2. Gearbox Reservoir Oil
Use an SAE 85W90 gear oil for all operating conditions.

3. Chain Case Reservoir Oil
Use an SAE 85W90 gear oil for all operating conditions.
Reservoir Capacity: 2 quarts (2 liters)

4. Storing Lubricants
Your machine can operate at top efficiency only if clean lubricants are used. Use clean containers to handle all lubricants. Store them in an area protected from dust, moisture and other contaminants.

GREASING

Use the Maintenance Checklist provided to keep a record of all scheduled maintenance.

1. Use only hand-held grease gun for all greasing.
2. Wipe grease fitting with a clean cloth before greasing, to avoid injecting dirt.
3. Replace and repair broken fittings immediately.
4. If fittings will not take grease, remove and clean thoroughly. Also clean lubricant passageway. Replace fitting if necessary.
5. Inject grease until you see the grease being expelled from the bearing or bushing areas.

MAINTENANCE SAFETY

1. Review the Operator's Manual and all safety items before working with, maintaining or operating the Rake.
2. Lower rake, stop the tractor engine, place all controls in neutral, set park brake, remove ignition key and wait for all moving parts to stop before servicing, adjusting, repairing or unplugging.
3. Keep hands, feet, clothing and hair away from all moving and/or rotating parts.
4. Clear the area of bystanders, especially children, when carrying out any maintenance and repairs or making any adjustments.
5. Place safety stands or large blocks under the frame before removing tires or working beneath the machine.
6. Be careful when working around or maintaining a high-pressure hydraulic system. Wear proper eye and hand protection when searching for a high-pressure hydraulic leak. Use a piece of wood or cardboard as a backstop when searching for a pin hole leak in a hose or a fitting.
7. Always relieve pressure before disconnecting or working on hydraulic system.

SERVICING INTERVALS

8 Hours or Daily

1. Lubricate Spiral Drum Hanger Bearings (3 locations).

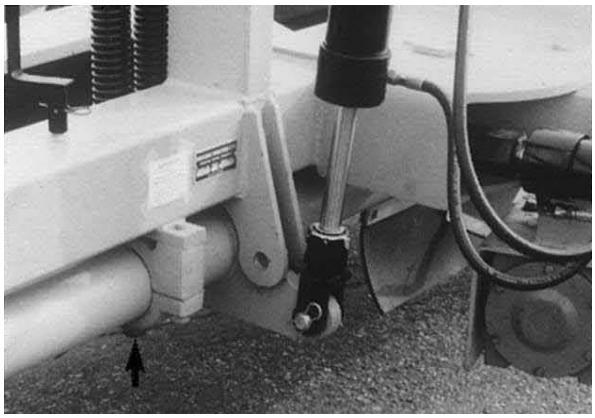

2. Check the oil level in the chain drive reservoir. It should just touch the chain when the drum is resting on the ground. Add as required.

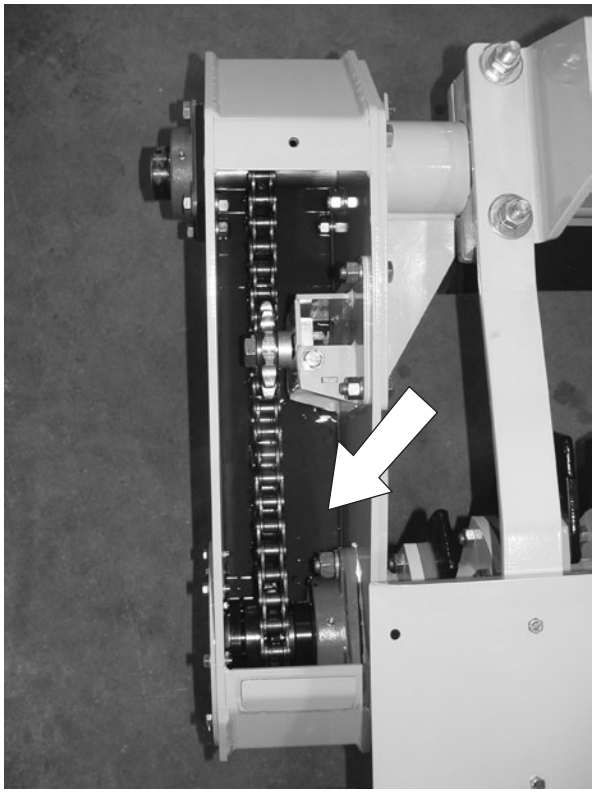

8 Hours

1. Lubricate all Universal Joints.

   a. PTO Driveline (2 locations).
   Paint the inner telescoping shaft with grease.

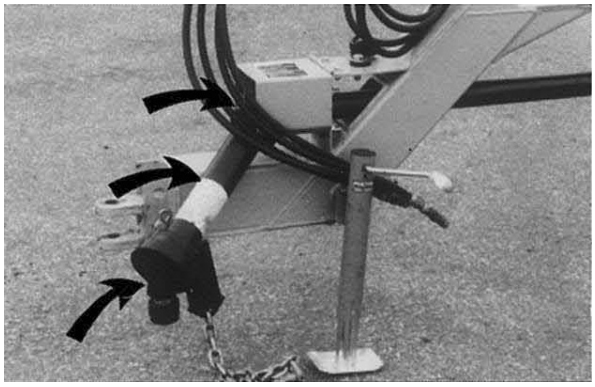

   b. At Torque Limiter into Gearbox (1 locations).

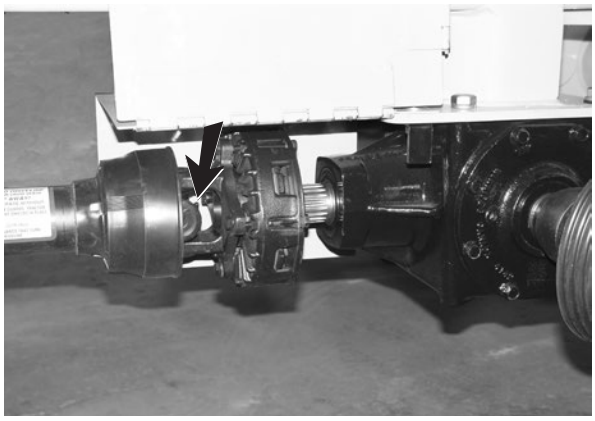

   c. Cross Driveline (3 locations).

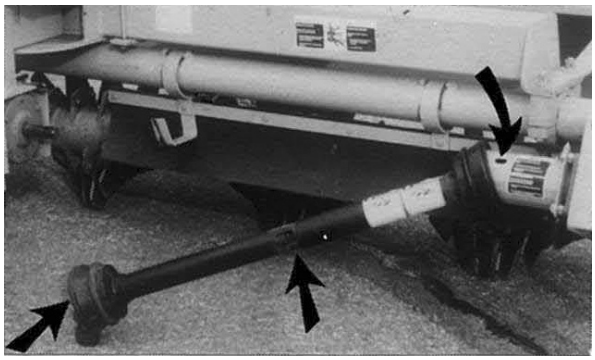

2. Check the oil level in the gearbox reservoir. Add as required.

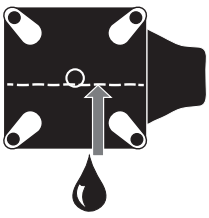

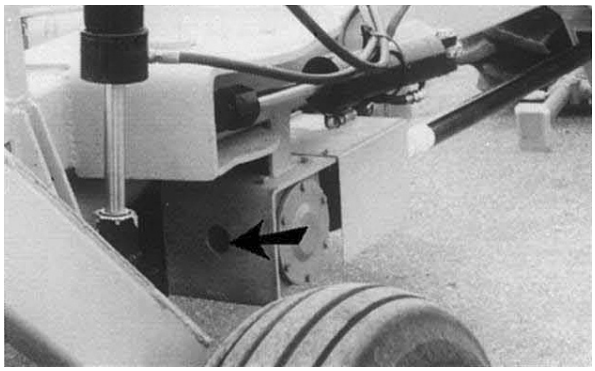

25 Hours

1. Lubricate driveline hanger bearing (1 location).

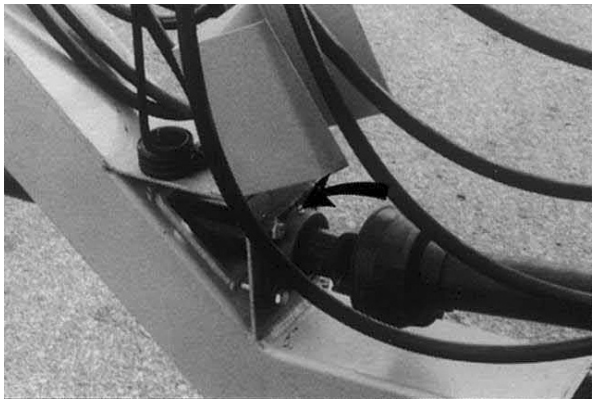

CAUTION

Shield is shown open for illustrative purposes only. Close shield before operating.

2. Lubricate chain drive bearings (3 locations).

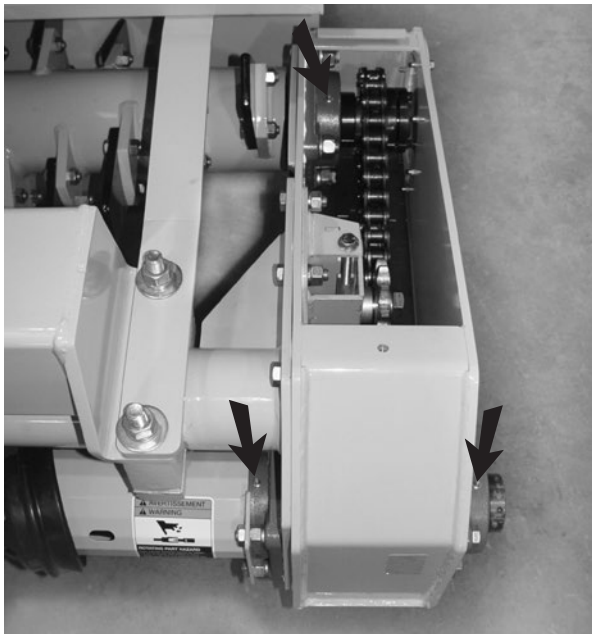

3. Lubricate spiral drum bearings (1 locations).

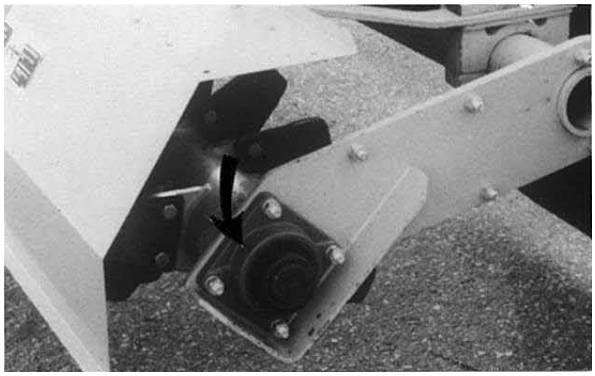

4. Oil suspension system pivot pin.

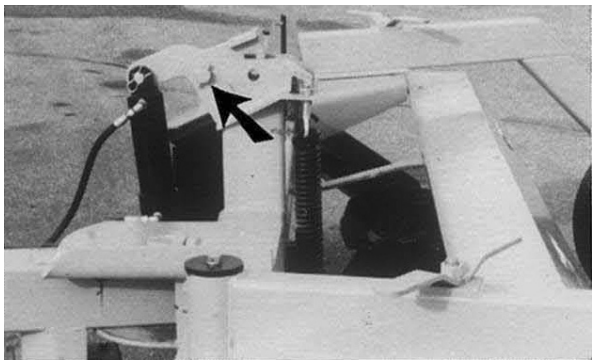

50 Hours

1. Lubricate hitch jack.

   Note: *Not all jacks are equipped with a grease fitting.*

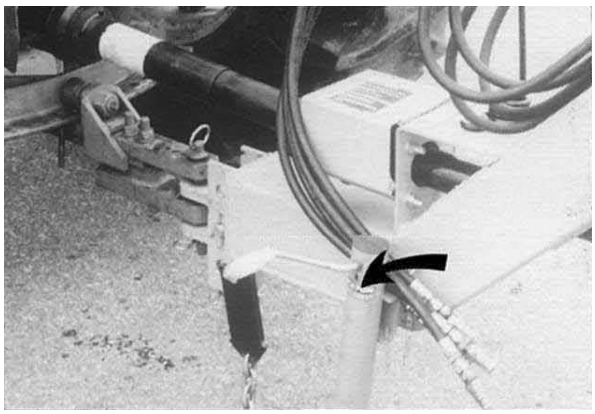

2. Lubricate wheel leg pivots (2 locations).

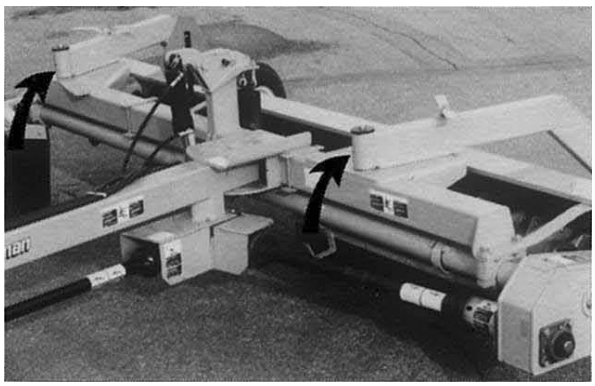

3. Lubricate center frame pivot (1 location).

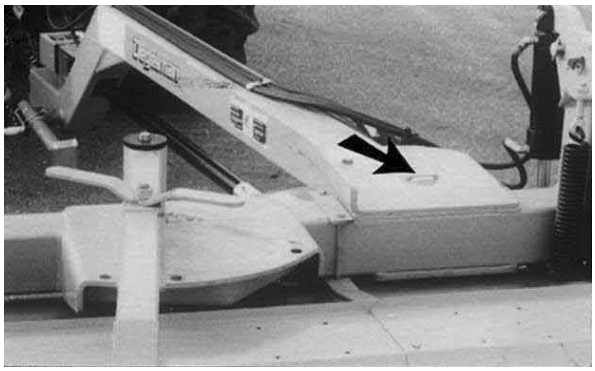

Annually

1. Repack wheel bearings.



2. Coat hydraulic cylinder rods with oil before storage.

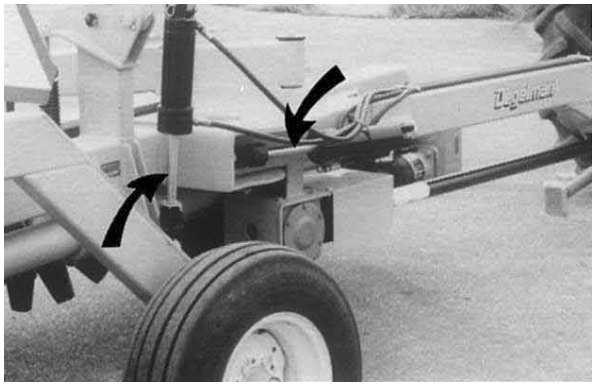

SERVICE RECORD

See Lubrication and Maintenance sections for details of service. Copy this page to continue record.

ACTION CODE: ✔ CHECK L LUBRICATE C CHANGE R REPLACE CL CLEAN

HOURS / SERVICED BY / MAINTENANCE																	
8 HOURS																	
L Spiral Drum Hanger Brgs. (3)																	
✔ Oil Level Chain Drive Reservoir																	
L All Universal Joints																	
L PTO Driveline (3)																	
L Torque Limiter into Gearbox (1)																	
L Cross Driveline (3)																	
✔ Oil Level In Gearbox Reservoir																	
25 HOURS																	
L Driveline Hanger Bearing (1)																	
L Chain Drive Bearings (3)																	
L Spiral Drum Bearing (1)																	
L Suspension System Pivot Pin																	
50 HOURS																	
L Hitch Jack																	
L Wheel Leg Pivots (2)																	
L Center Frame Pivot (1)																	
ANNUALLY																	
L Wheel Bearings																	
L Hydraulic Cylinder Rods																	

Adjustments

HITCH CLEVIS

The hitch pole should always be set to be parallel to the ground when attached to the tractor. To set this angle, follow this procedure:

1. Clear the area of bystanders, especially small children.
2. Install the drawbar pin to attach the clevis to the tractor.
3. Use the hitch jack to lower the hitch and transfer the weight to the drawbar.
4. Step back and check to see if the pole is parallel to the ground.
5. If it isn't, use the jack to raise the pole and center the clevis to the drawbar.
6. Remove the clevis mounting pin.
7. Move the clevis up or down as required.
8. Install the clevis mounting pin and retainer.
9. Lower the hitch and check the pole angle again.

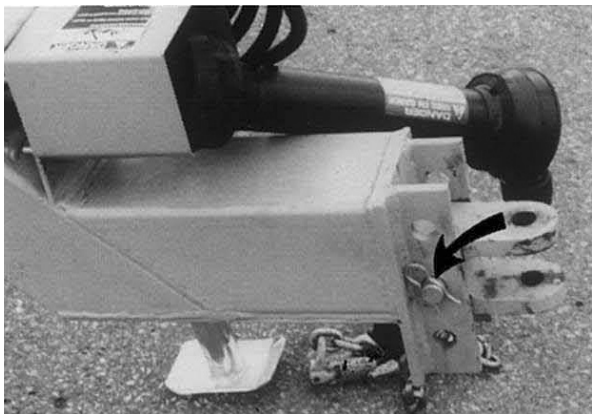

SUSPENSION SYSTEM

The spiral drum is supported on springs to carry part of the weight. It provides a suspension system that allows the drum to float over obstacles encountered in the field and reduces the shock loads.

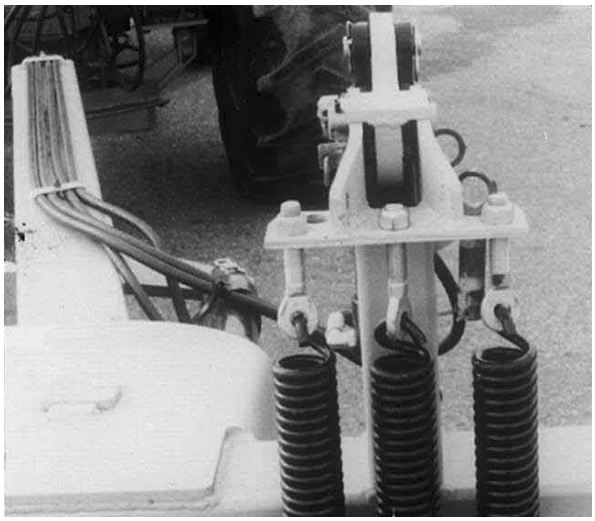

To set the initial tension:

1. Turn the nut on each eyebolt until there is approximately 1 1/2 - 2 threads past the nut.

2. Operate the Rake in the field to determine its performance. Adjust the spring tension as required.

3. The best field performance requires that the teeth on the drum penetrate the ground 1 inch (25 mm) and yet provide enough flotation to lift the drum over field obstacles to prevent shock loads.

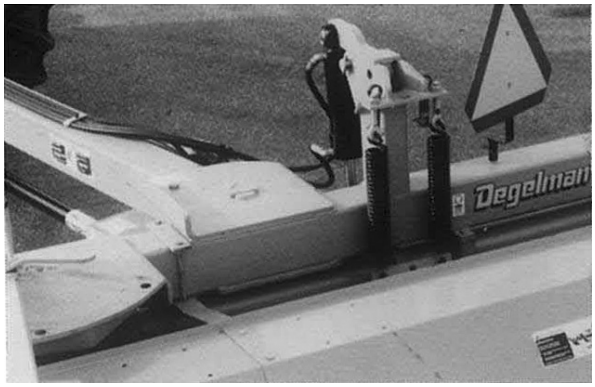

4. The machine is equipped with 3 springs in the suspension system. For most field conditions, it is recommended to use all 3 springs set at a minimum tension. However should more drum weight be desired the centre spring can be removed on occasion.

5. To remove the center spring, loosen the nut on its eyebolt. Store the removed spring where it will be available when needed.

6. Readjust the remaining two springs to give the desired flotation.

CHAIN TENSION

The tension of the spiral drum roller chain drive should be checked frequently. Remove the top cover to access the chain.

1. The recommended tension provides for 1/4 to 1/2 inch (6 to 12 mm) sag in the lower span.

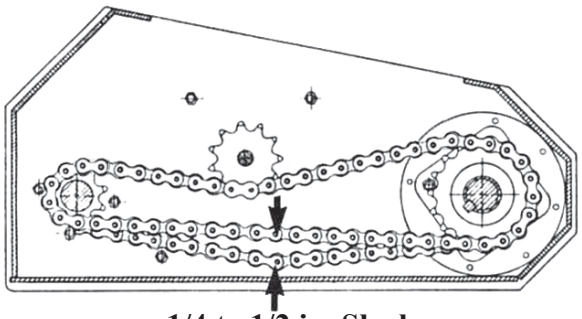

1/4 to 1/2 in. Slack

2. To adjust the tension, loosen the 1 x 3 1/2 in. sprocket bolt. Tighten the adjustment bolt to allow approximately 1/4″ to 1/2″ chain slack.

   Torque the 1″ sprocket bolt to:
   550 ft-lbs (745 N.m)

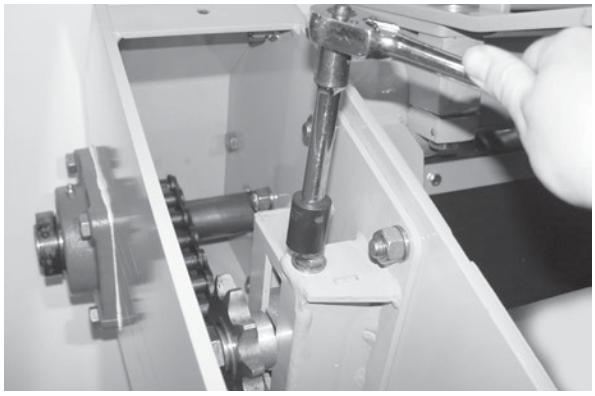

3. Replace the top access cover.

   (Note: Updated cover design consists of a thumbscrew and flat washer at both the upper and lower locations instead of the lower tab.)

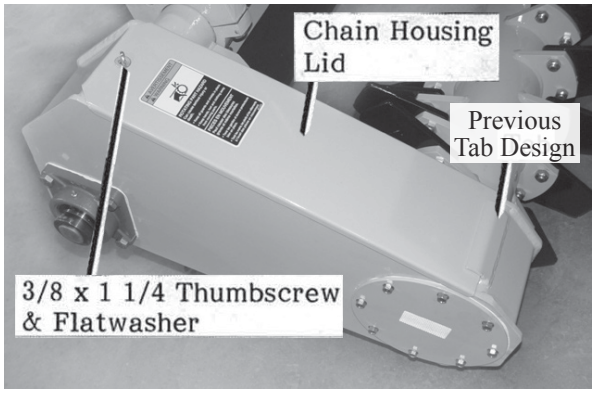

WHEEL HEIGHT

The height of the wheels can be set to work in any field condition. To adjust, follow this procedure:

1. Clear the area of bystanders, especially small children before starting.

2. Use the hydraulics to lower the spiral drum to the ground and raise the wheels off the ground.

3. Place safety stands or large blocks under the end of the wheel leg to prevent the leg from dropping while moving the wheel.

4. Loosen the axle bolt plate and slide the wheel to the new position. Retighten bolts.

5. Repeat with the other wheel assembly.

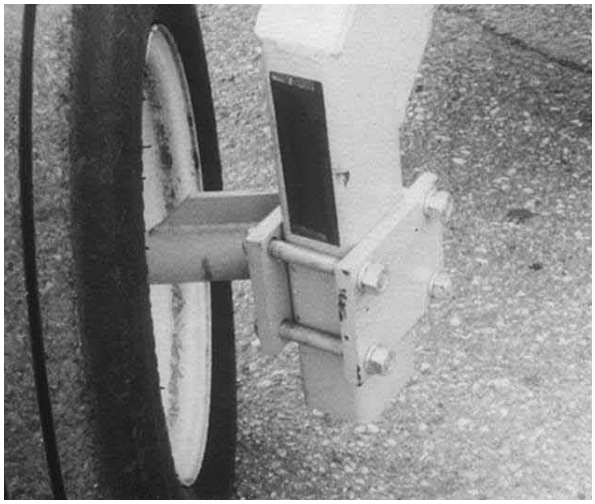

6. The wheel height can be used to adjust the angle that the drum makes with the ground.

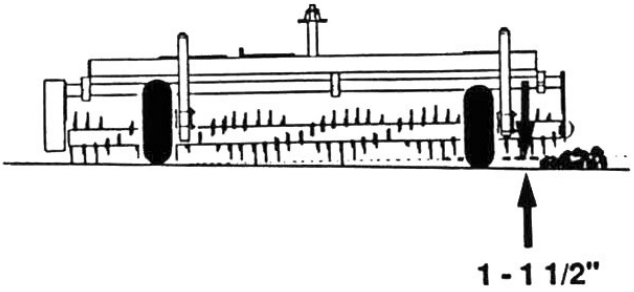

7. For best field performance, it is recommended that the right end of the drum be set 1 to 1-1/2 inches (25-40mm) higher than the left end.

By setting the right end of the drum higher than the left, soil will drop out of the rocks and not become part of the windrow.

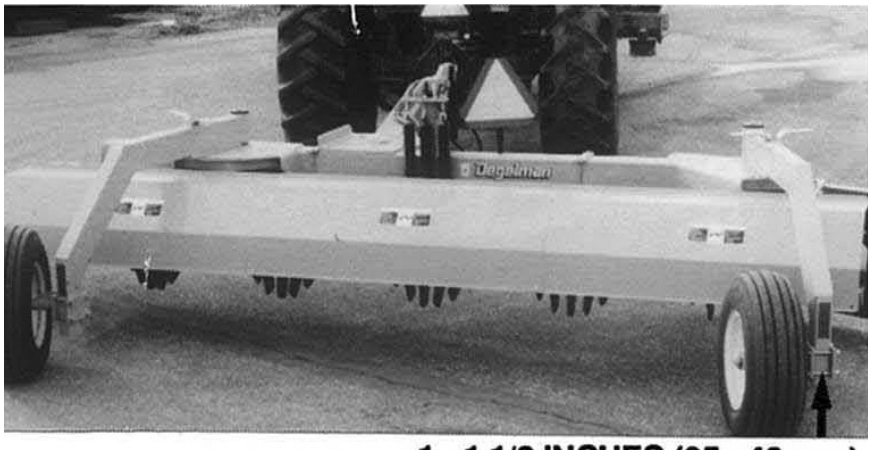

SPACER SHIMS

After prolonged use, the rockshaft and its hanger castings can wear and become loose. To tighten this area, follow this procedure:

1. Loosen the bolts connecting the hangers.

2. Remove the shims. (1 per side).

3. Tighten the bolts.

4. Repeat the procedure on the other 2 hangers.

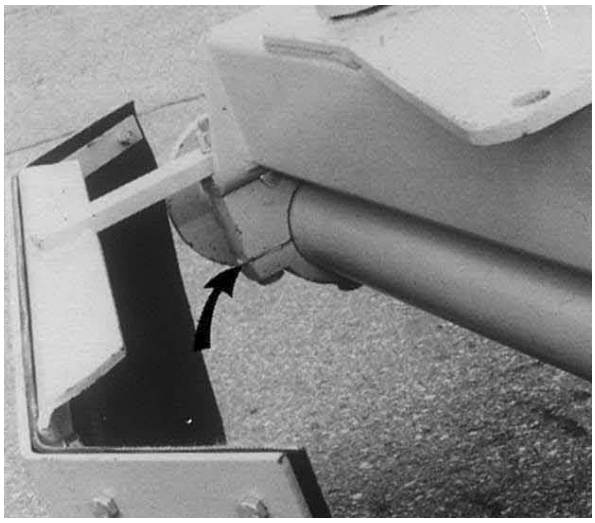

REVERSING TEETH

The teeth on the spiral drum are designed to be reversed when one side becomes worn. To reverse, remove mounting bolts. Reverse tooth and tighten mounting bolts. Be sure to install the tooth on the right hand side of the tooth holder.

IMPORTANT:
Torque all tooth bolts to 180 ft-lbs (245N.m).



ROLLER CHAIN ADJUSTMENTS

If chain link wear is noticed, it may be caused by sprocket misalignment. To check and align sprockets, follow this procedure:

1. Check to determine which sprocket needs aligning. Each sprocket must be 2 3/16 inches (56 mm) from the side of the chain case. The idler sprocket is fixed at this dimension.

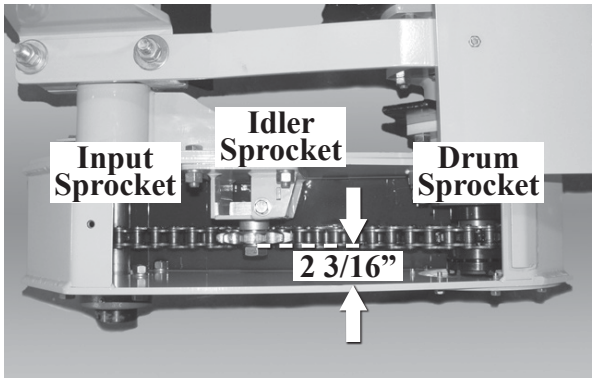

2. If the front input sprocket is misaligned (PTO models), loosen the set screws on the locking collars and then loosen lock collars.
3. Tap the sprocket into position.
4. Tighten the outboard lock collar by turning clockwise and the inboard collar by turning counterclockwise. Tighten the set screws.

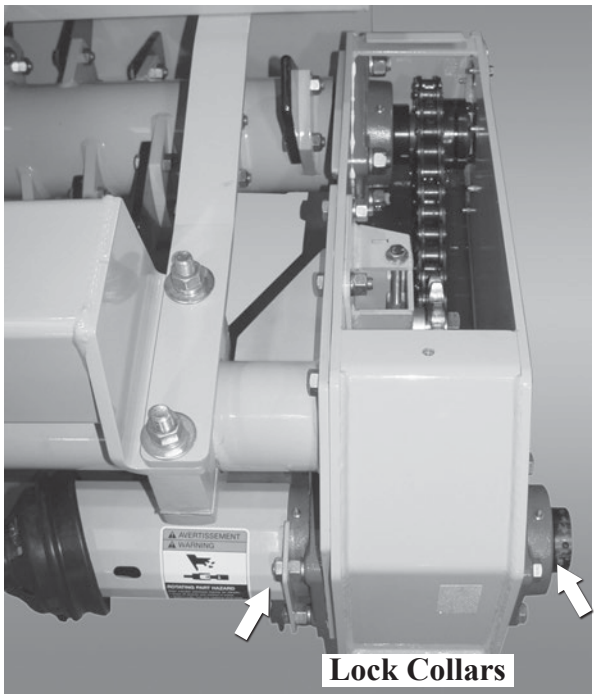

5. If the spiral drum sprocket is misaligned, remove the bolts on the split bushing and thread two of them into threaded holes. Tighten both bolts evenly until bushing dislodges.
6. Reposition the sprocket and secure by reinstalling the split bushing and tightening the three bolts evenly.

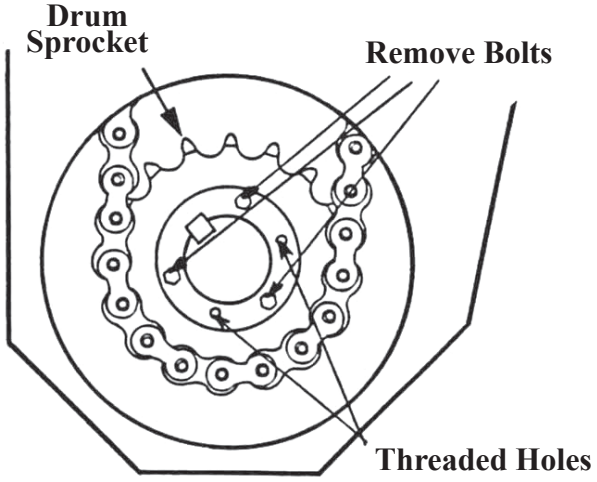

Repair

BEARING REPLACEMENT

When bearing noise becomes evident, replacement of the bearing is necessary. Whether the complete bearing unit or just the bearing insert was purchased, proceed as follows:

WARNING

Before removing bearing unit be sure affected areas are securely blocked up and the PTO driveline is disconnected from the tractor.

1. Loosen set screw with allen wrench.
2. Use drift punch and hammer to loosen lock collar.

   NOTE: Lock collar loosens opposite the direction of rotation.
3. Remove lock collar and bolts.
4. Pull bearing unit from shaft and replace.
5. Relocate lock collar and tighten in direction shown.
6. Tighten set screw.
7. Lubricate grease fitting.

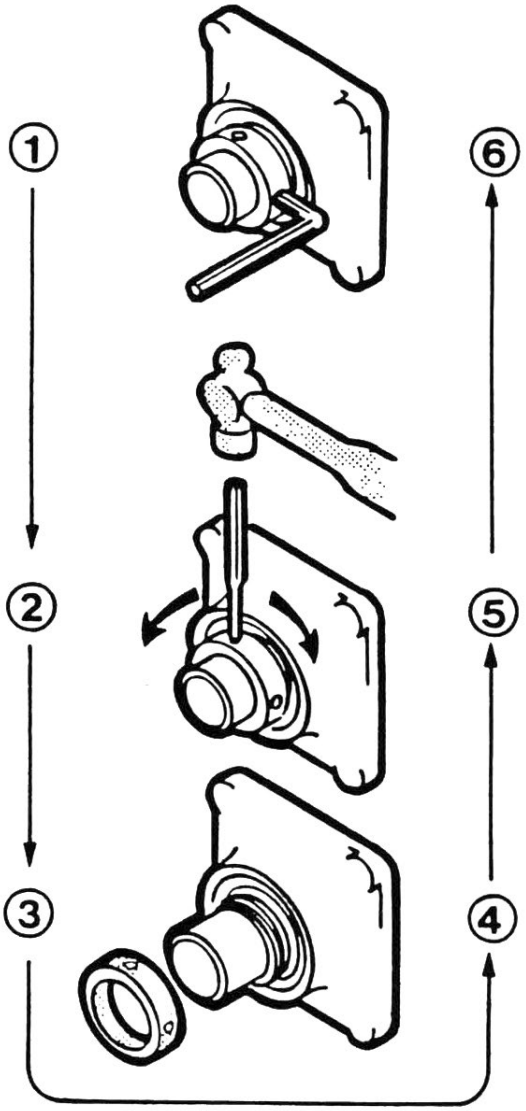

GEARBOX REPAIR

DISASSEMBLY PROCEDURE

1. Cross Shaft Removal

- Remove bolts (8 pcs.) and open cover (cover with shaft).

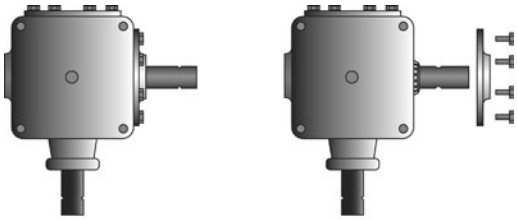

- Remove cross shaft assembly. Pull off bearings and replace with new ones.

(**NOTE:** Take care to remember the positioning of any shaft shims - if applicable.)

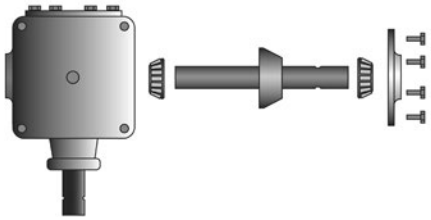

- Leave cross shaft assembly to the side.

2. Pinion Shaft Removal

(**NOTE:** Cross shaft must be removed prior to pinion shaft removal.)

- Remove closed cover bolts (8 pcs.) and cover.

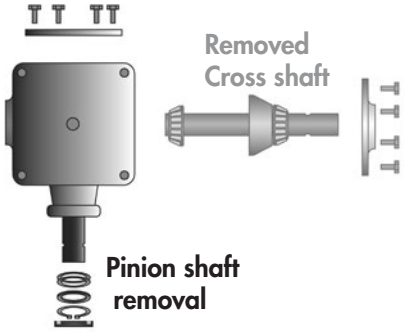

- To pull out shaft you first must remove the oil seal. Using a sharp object such as a screwdriver, poke a hole into the seal and pry out.

- Proceed to remove the snap ring, washer, and shim(s).

(**NOTE:** Take care to remember the positioning of shaft shims.)



- With the pinion shaft sticking straight up and taking care not to damage the shaft or other components, tap the pinion assembly into the gearbox.

(**NOTE:** You may wish to use a brass punch.)

- This should free the shaft from the outer bearing.

- Remove the inner bearing.

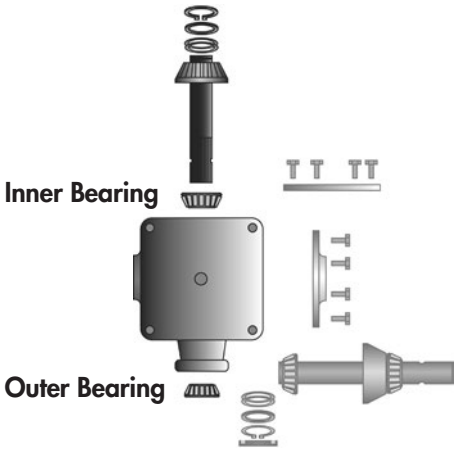

- Remove the snap ring, washer, shims, and gear.

(Leave pinion shaft assembly parts to the side taking note of proper part placement for later assembly.)

3. To Service/Replace Seals

- To replace a seal or expansion plug, tap it out from the inside.

4. To Service/Replace Bearing Cups

- Using a long object such as a bar or pipe and a hammer, knock the cups out by tapping along the outer edges. Alternate sides when tapping cup.

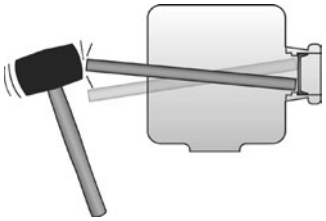

RE-ASSEMBLY PROCEDURE

1. Replace Bearing Cups

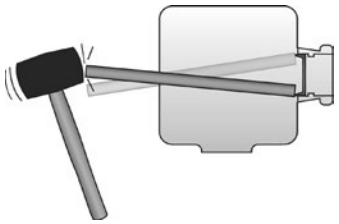

- Using a long object such as a bar or pipe and a hammer, tap the cups into place along the outer edges. Alternate sides when tapping cup.

(**NOTE:** This procedure must be completed carefully so you do not damage any parts.)

2. Install Pinion Shaft Assembly



- Install gear onto shaft followed by the shims, washer, and snap ring (Omit this step for pinion shafts with machined gear ends).

- Install first bearing that is seated directly behind the gear.

- Install pinion shaft into gearbox. Install second bearing onto shaft followed by shims, washer, and snap ring. (Make sure the snap ring is closed. To close, take a screwdriver and tap around the snap ring until it is secured.



- Replace the closed cover shim(s) and then position cover into place.

- Install closed cover bolts.

3. Install Cross Shaft Assembly

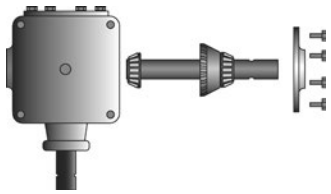

- Install new bearings.

- Position washer and shims (if applicable), turn gearbox onto its side, and then insert assembly into position.

- Replace the open cap/ cover shim(s) and then position open cap into place.

- Install cap/cover bolts.

- After gearbox is assembled make sure it turns freely and that it has backlash in between the gears. (Backlash should be between .005 to .010)

(**NOTE:** If there is too much or too little backlash, follow the procedure for adjusting shims.)

4. Install Seals

- For both shafts, carefully slide the seal over the shaft and gently hit the seal side to side until it is in place.

- Install the expansion plug by gently hit the plug side to side until it is in place.

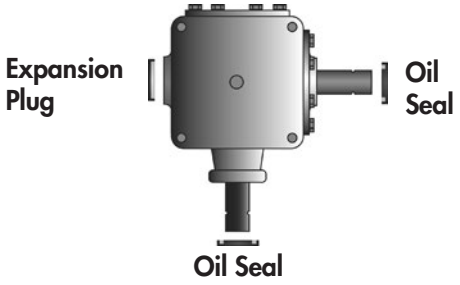

PROCEDURE TO SHIM & SET BEARINGS

Shim a Pinion (Quill) Shaft



To shim a pinion shaft you must put the shim in between a washer and bearing ("A" - bottom) or a washer and gear ("B" - top). There must be resistance in the shaft when turning. Make sure there isn't any end play (up & down) and no side play. If the snap ring doesn't close you have too many shaft shims. If the shaft is too tight you will feel the bearing being notchy. Also the shaft must not spin too freely, if it does, add another shaft shim ("A"). Always make sure the snap ring is closed.

Shim a Cross Shaft

To shim a cross shaft, place sub assembly into gearbox. Using cover shim ("C"), place shim on top of face of gearbox then place cap on top and bolt down. If shaft is too tight add more shims. When adding shims, add one at a time and try to turn the shaft. Same as the pinion shaft, make sure there isn't any end play (up & down) and no side-to-side movement in the shaft. If shaft is too loose, remove a shim or two to tighten up. Also, make sure there isn't any notchy feeling in the bearings (means it's too tight).

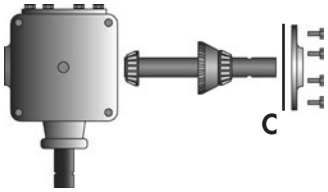

When proper set is achieved, apply sealant to bearing caps and tighten.

HYDRAULIC CYLINDER REPAIR

PREPARATION

When cylinder repair is required, clean off unit, disconnect hoses and plug ports before removing cylinder.

When removed, open the cylinder ports and drain the cylinder's hydraulic fluid.

Examine the type of cylinder. Make sure you have the correct tools for the job.

You may require the following tools:

- *Proper **Seal Kit***
- *Rubber Mallet*
- *Screwdriver*
- *Punch*
- *Pliers*
- *Emery cloth*
- *Torque Wrench*

Types of Cylinders
(Wire Ring / Threaded Head)

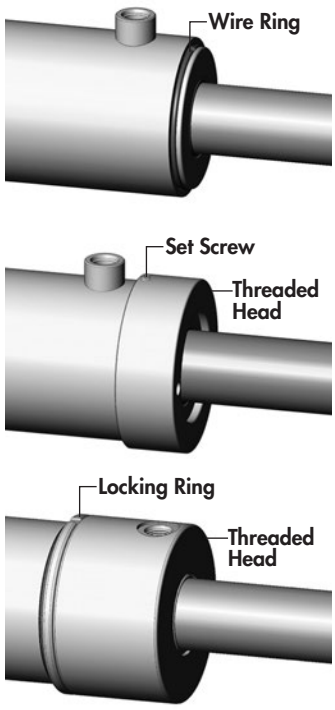

REPAIRING A WIRE RING CYLINDER

1. Retract the rod assembly.
2. Remove the external steel wire ring.

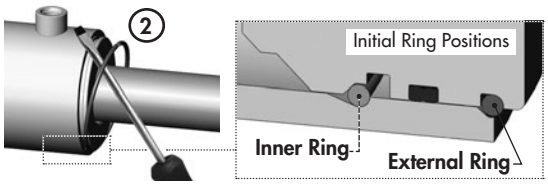

3. Remove any dirt that may have accumulated on the cylinder head.
4. Using the mallet and punch, push the head into the cylinder tube until the internal tube groove is fully exposed. This will also move the internal wire ring into its removal position.

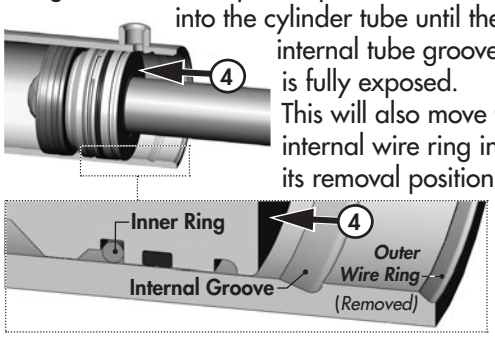

5. Take the plastic removal ring from the seal kit:
   a) Straighten the ring and remove any kinks or excessive curl to make installation easier and prevent it from falling out.
   b) Insert the removal ring into the internal groove with the feathered end pointing into the tube.

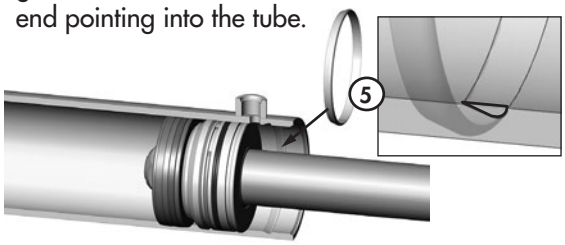

   c) Use a screwdriver or a finger to hold one end of the ring in the groove while fitting the other end of the ring into the groove. The tips should snap in together. Ensure it is secure and fully seated before the next step.

   IMPORTANT: It is important to e*nsure the removal ring is completely in the groove before pulling the rod out. If the ring sticks out it will get stuck between the head and tube.*

6. a) Extend the rod to pull head out of tube. If the rod does not pull out easily, push the head back in and ensure the ring is properly in the groove. Replace ring if necessary.

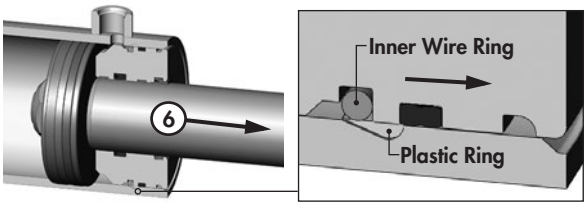

   Note: *Excessive force will not overcome a jammed ring and could damage the cylinder.*

   b) Completely remove rod and head from tube.

7. Remove plastic removal ring from the cylinder tube.

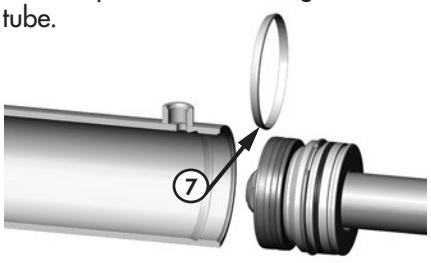

8. Remove locknut, piston and head from rod.

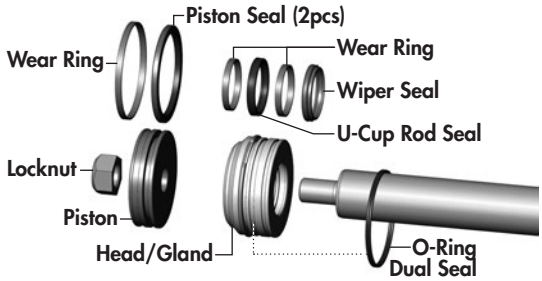

9. a) Inspect and replace all of the seals with new components.

   b) Inspect the inside of the cylinder barrel, piston, rod and other polished parts for burrs and scratches. Smooth areas as needed with an emery cloth.

   c) During re-assembly of head/gland assembly, leave the outer O-Ring Dual Seal loose on the rod to re-install at a later step.

10. Replace piston and torque the locknut to required value. (Refer to chart below)

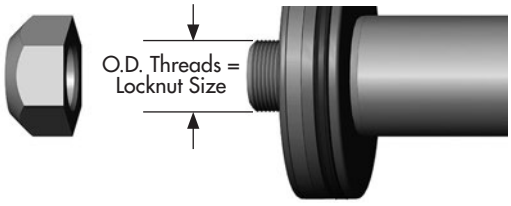

LOCKNUT SIZE (PISTON)	TORQUE VALUE
3/8 - 24 UNF	25-30 lb.ft (35-42 *N.m*)
1/2 - 20 UNF	**40-60 lb.ft *(55-80 N.m)***
5/8 - 18 UNF	95-105 lb.ft (130-140 *N.m*)
3/4 - 16 UNF	**175-225 lb.ft *(240-305 N.m)***
7/8 - 14 UNF	200-275 lb.ft (270-370 *N.m*)
1 - 14 UNF	**300-380 lb.ft *(405-515 N.m)***
1 1/8 - 12 UNF	400-500 lb.ft (540-675 *N.m*)
1 1/4 - 12 UNF	**500-600 lb.ft *(675-810 N.m)***
1 1/2 - 12 UNF	700-800 lb.ft (950-1085 *N.m*)
1 3/4 - 12 UNF	**800-900 lb.ft *(1085-1220 N.m)***

11. a) Install the supplied band clamp to compress the inner wire ring on the head/gland assembly so it will fit into the tube.

    Note: Make sure the cam of the band clamp is not overtop of the gap in the ring.

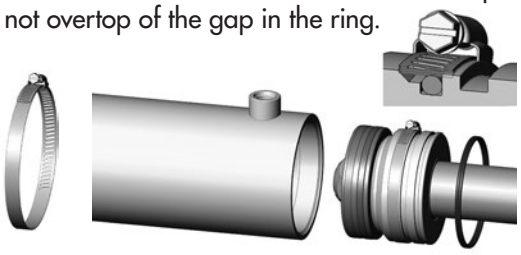

11. b) Tighten the band clamp to ensure the wire ring is fully seated. Then, loosen the clamp approx. 1/2 a turn to allow band clamp to slide during final assembly.

12. Lubricate the cylinder tube and piston seals.

13. Insert the piston into the tube. Tap the cylinder head into the tube until the clamp slides over and the inner wire ring is inside the tube.

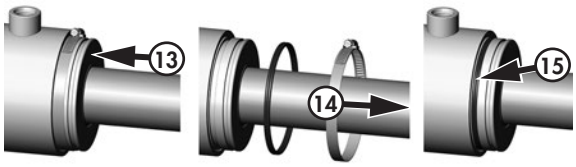

14. Loosen the clamp and remove.

15. Install the O-Ring Dual seal.

16. Tap the head the rest of the way until the end is flush with the tube.



IMPORTANT: The head/gland must be inserted until it is flush with the tube to allow the inner wire ring to snap into its seated position in the internal cylinder groove. Failure to insert the head flush as shown will result in the head and rod assembly coming out of the tube when pressure is applied to the cylinder.

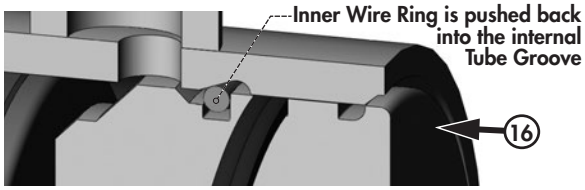

17. Pull the rod out to expose the external wire ring groove in cylinder head, and then install the external ring.

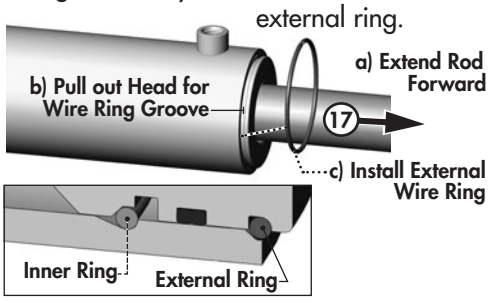

18. Before using the cylinder, ensure that you double check your work.

REPAIRING A THREADED HEAD CYLINDER

Set Screw Style

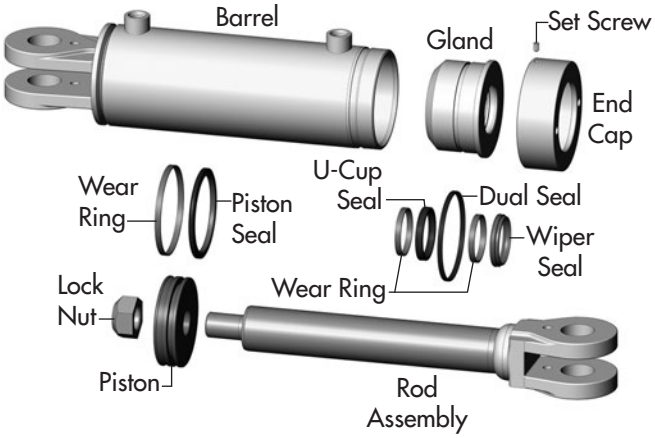

DISASSEMBLY

1. Loosen Set Screw and turn off end cap.
2. Carefully remove piston/rod/gland assemblies.
3. Disassemble the piston from the rod assembly by removing lock nut.

NOTE: *DO NOT* clamp rod by chrome surface.

4. Slide off gland assembly & end cap.
5. Remove seals and inspect all parts for damage.
6. Install new seals and replace damaged parts with new components.
7. Inspect the inside of the cylinder barrel, piston, rod and other polished parts for burrs and scratches. Smooth areas as needed with an emery cloth.

REASSEMBLY

1. Reinstall rod through end cap & gland assembly.
2. Secure piston to rod with lock nut. Torque lock nut to proper value (refer to chart on previous page for proper torque value).
3. Lube inside of barrel, piston seals, and gland seals with hydraulic oil.
4. With cylinder body held gently in a vise, insert piston, gland, end cap and rod combination using a slight rocking motion.
5. Apply Loctite anti-seize before installing cylinder end cap.
6. Torque cylinder end cap to 440 lb.ft (600 N.m).
7. Tighten Set Screw on end cap to 6 lb.ft (8 N.m).

REPAIRING A THREADED HEAD CYLINDER

Locking Ring Style

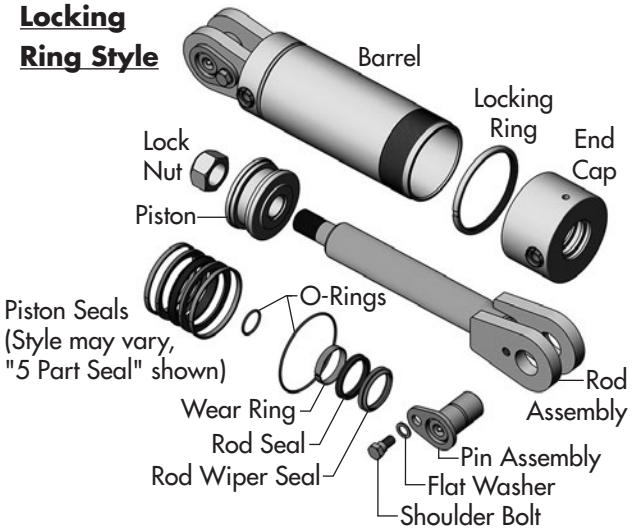

DISASSEMBLY

1. Loosen Locking Ring and turn off end cap.
2. Carefully remove piston, rod and end cap.
3. Disassemble the piston from the rod assembly by removing lock nut.

NOTE: *DO NOT* clamp rod by chrome surface.

4. Slide off end cap.
5. Remove seals and inspect all parts for damage.
6. Install new seals and replace damaged parts with new components.
7. Inspect the inside of the cylinder barrel, piston, rod and other polished parts for burrs and scratches. Smooth areas as needed with an emery cloth.

REASSEMBLY

1. Reinstall rod through end cap.
2. Secure piston to rod with lock nut. Torque lock nut to proper value (refer to chart on previous page for proper torque value).
3. Thread lock ring fully onto barrel.
4. Lube inside of barrel and piston seals with hydraulic oil.
5. With cylinder body held gently in a vise, insert piston, end cap and rod combination using a slight rocking motion.
6. Turn end cap fully against lock ring then back off end cap to align ports.
7. Tighten Locking Ring against end cap using a punch and hammer.

WHEEL HUB REPAIR

⚠ **IMPORTANT:** *Be sure to block up wheel leg before removing tires.*

DISASSEMBLY

1. Carefully pry off dust cap.
2. Remove cotter pin from nut.
3. Remove nut and washer.
4. Pull hub off spindle.
5. Dislodge the inner cone bearing and dust seal.
6. Inspect cups that are press fitted into hub for pits or corrosion and remove if necessary.
7. Inspect and replace defective parts with new ones.

ASSEMBLY

1. If cups need replacing, be careful to install them gently and evenly into hub until they are fully seated.
2. Apply a thick wall of grease inside hub. Pack grease in cones.
3. Install dust seal as illustrated, and inner cone.
4. Position hub onto spindle and fill surrounding cavity with grease.
5. Assemble outer cone, washer and nut.
6. Tighten nut while rotating hub until there is a slight drag.
7. Turn nut back approximately 1/2 turn to align cotter pin hole with notches on nut.
8. Install cotter pin and bend legs sideways over nut.
9. Fill dust cap half full of grease and gently tap into position.
10. Pump grease into hub through grease fitting until lubricant can be seen from dust seal.

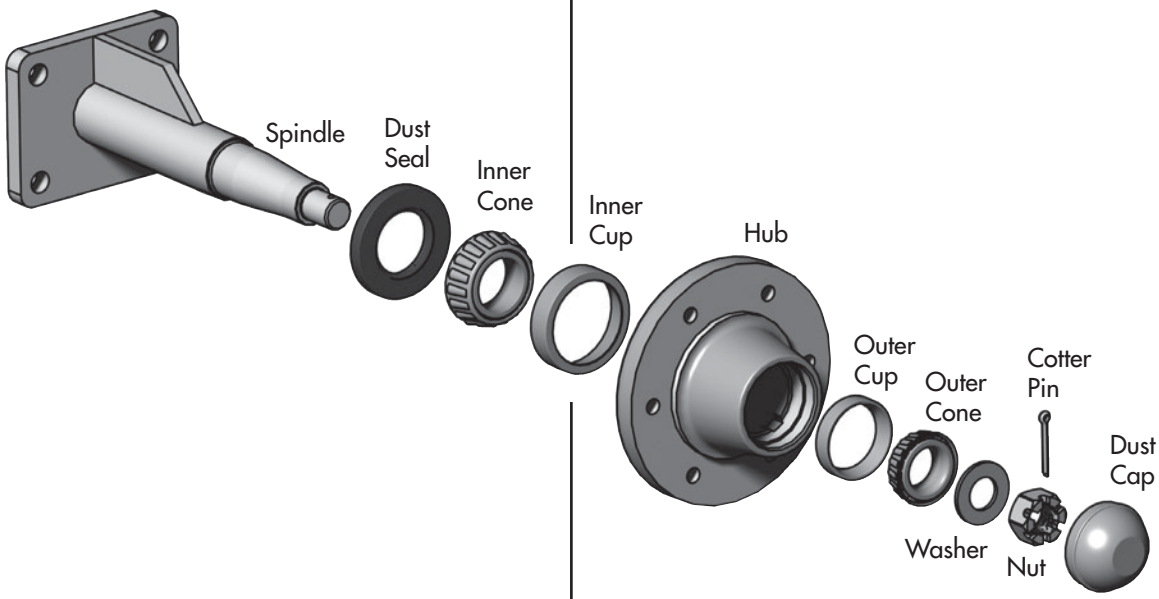

TORQUE LIMITER RUN IN & REPAIR
Tools Required: (1) 1/2" Box wrench or socket

RUN IN OF THE MODULAR CLUTCH
(Necessary for all new clutches and clutches that have not been operated for (1) season or approximately 60 days.)

1. Make sure the tractor is off and the PTO is disengaged.
2. Disconnect the driveline from the tractor.
3. Loosen the bolts on the outside diameter of the clutch until all bolts are just loose, then tighten all bolts one half turn.
4. Attach the implement to the tractor and the driveline to the tractor PTO. Stand clear.
5. Turn the tractor on. Engage the PTO clutch and run for a few seconds, or until the clutch visibly smokes, then disengage the PTO.
6. Make sure the tractor is off and the PTO is disengaged.
7. Disconnect the driveline from the tractor.
8. Tighten all the bolts on the outside diameter of the clutch or until the compression plate is tight against the housing.
9. Grease the fitting on the yoke using Shell Super Duty or an equivalent lithium grease.

REPAIR AND REBUILDING

DISASSEMBLY

1. Place the clutch and universal joint assembly on a bench, with the end of the clutch accessible.
2. Remove the long bolts on the outside of the housing that hold the friction pack together.
3. Remove the plate(s) and all internal components, leaving the yoke/hub intact.
4. Discard the friction discs if worn below 1/16".

INSPECTION

6. Inspect the steel and iron parts for wear, warpage or cracking and replace if necessary.
7. Inspect the yoke/hub for looseness. If there is more than .03 end play, replace.
8. Clean any, rust or dust from the plate surfaces with a wire brush or steel wool.

ASSEMBLY

9. Place one new friction disc inside the housing, then the separator plate, then the other friction disc.
10. Add the pressure plate so that the flat surface rests on the friction disc (the tangs on the plate must fall into the reliefs in the housing).
11. Add the disc spring so that the spring inside diameter contacts the fins of the pressure plate.
12. Assemble the compression plate and all long bolts, making sure that all nuts are in their pockets. Tighten all long bolts to 20 ft-lbs.

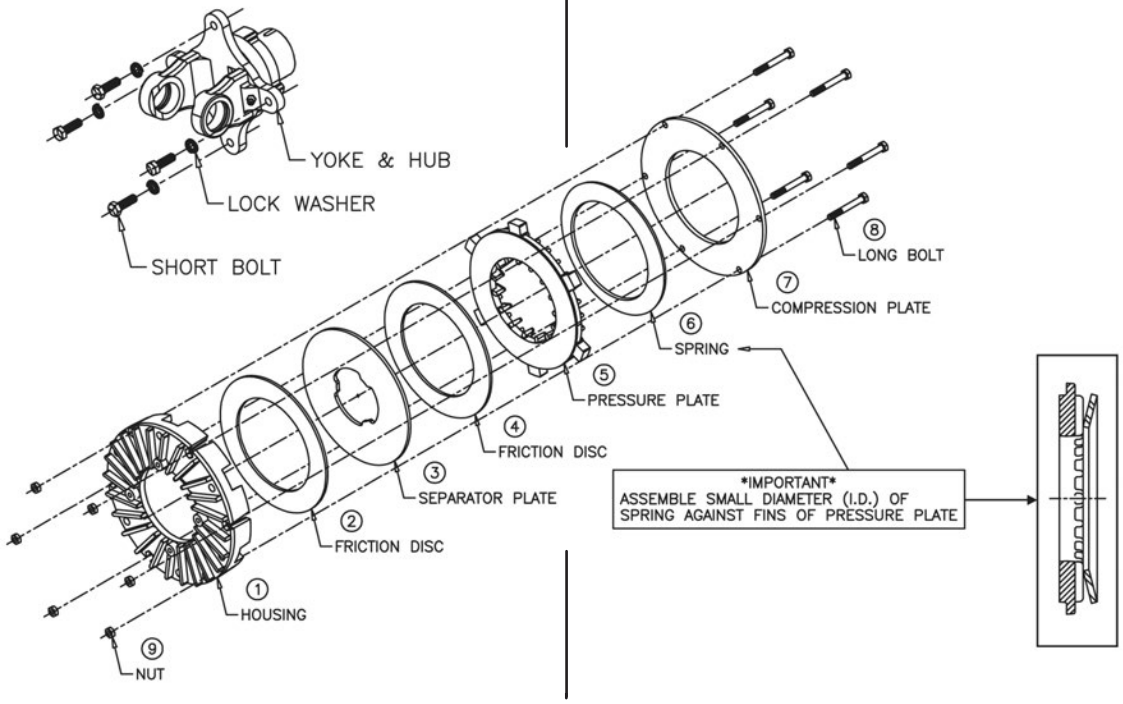

TOOTH REPAIR AND HARD SURFACING

Hard surfacing should be done on a regular basis to prevent excess wear on teeth.

Build up worn portions of teeth to restore them to their original contour using a low hydrogen 7018 build up rod.

Resurface teeth (a double pass is recommended) using hard surface welding rods. A hardness of RC 45-50 is desirable.

NOTE: *Special hard surfacing rod kits are available through Degelman Industries LP or your local Degelman Dealer.*

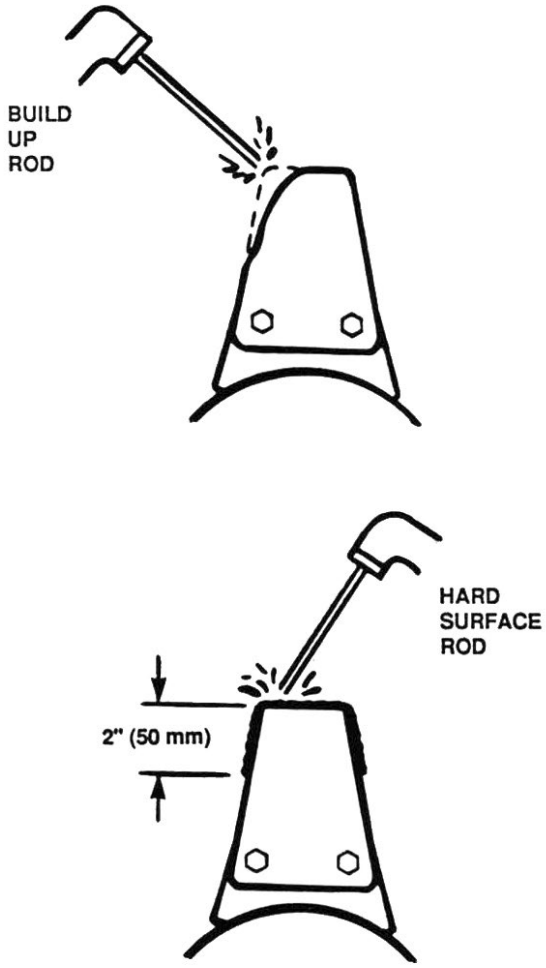

UNIVERSAL JOINT REPAIR

Universal joints are simply constructed and easily repaired. When repair becomes necessary, proceed as follows:

U-JOINT DISASSEMBLY

1. Pry off metal ring which secures the driveline guard in place.

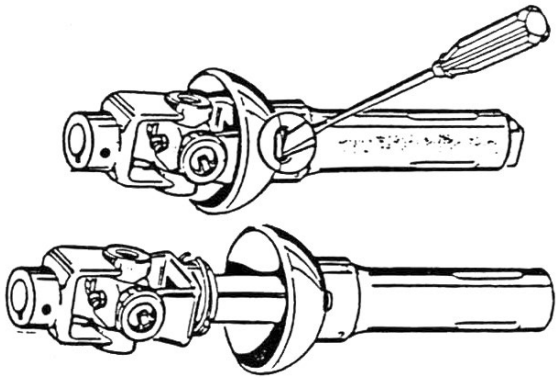

2. Remove snap rings.

   NOTE: If snap rings stick, loosen by tapping lightly on ends of bearing with a soft brass drift.

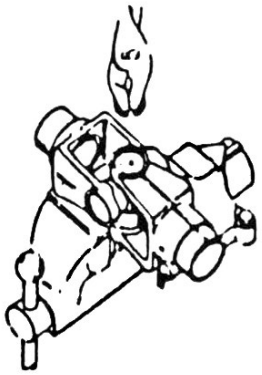

3. With drive shaft clamped in vice and end fitting held in palm of hand, tap yoke as illustrated, to work bearing outward and up.

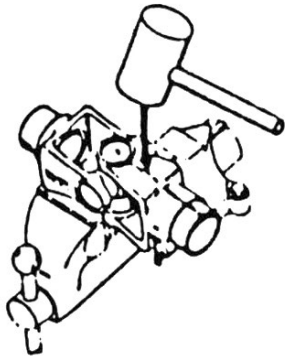

4. Clamp protruding bearing in vice. Tap yoke off bearing.

5. Turn joint over and tap exposed end of cross to remove second bearing.

6. Remove yoke.

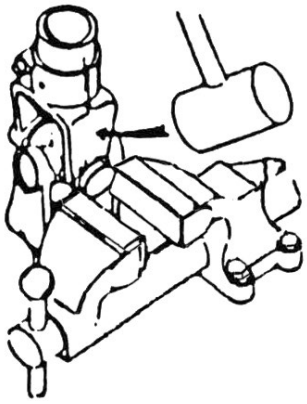

U-JOINT ASSEMBLY

1. Clamp end yoke lightly in vise, with grease fitting facing away from shaft.

2. Lift shaft to raise cross, permitting bearing to position itself on cross.

3. Tap bearing down to insert first snap ring.

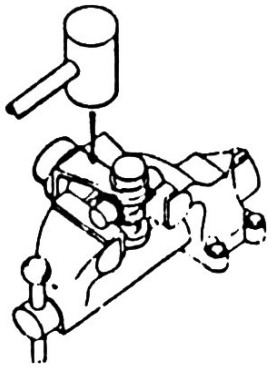

4. Assemble snap ring.

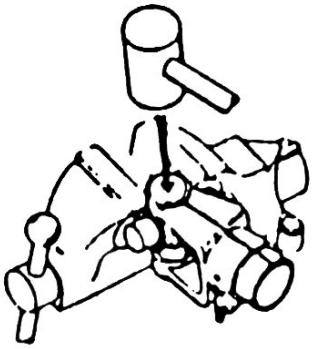

5. Turn shaft to bring second cross hole to top position.

6. Clamp end yoke lightly in vise.

7. Lift shaft to raise cross permitting bearing to position itself on end of cross.

8. Be careful not to dislodge roller bearings.

9. Tap bearing down to assemble second snap ring.

10. The joint should flex freely. If joint is stiff sharply strike yoke lugs as illustrated.

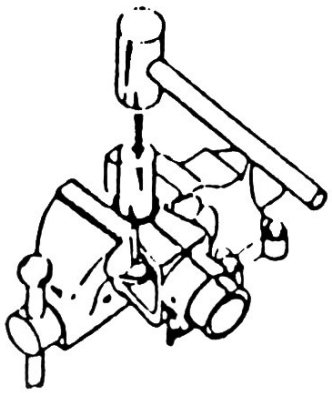

11. Reassemble protective shield and reinstall metal ring.

Troubleshooting

The Rock Rake uses a PTO drive to turn a toothed drum that moves rocks into a windrow. It is a simple and reliable system that requires minimal maintenance.

In the following section, we have listed many of the problems, causes and solutions to the problems that you may encounter.

If you encounter a problem that is difficult to solve, even after having read through this troubleshooting section, please call your local dealer or distributor. Before you call, please have this Operator's Manual and the serial number from your unit ready.

PROBLEM	CAUSE	SOLUTION
Spiral drum doesn't turn.	No PTO power.	Check tractor PTO system. Check torque limiter. Retighten or replace as required. (Page 78).
Drum doesn't float.	Suspension system locked.	Remove floating arm safety pin. Adjust spring tension. (Page 66).
Dirt in windrow.	Drum is level.	Raise drum on right hand side of machine. (Page 68).
Rocks missed.	Drum too light.	Adjust suspension system to add weight to drum. (Remove 1 spring). (Page 66).
	Traveling too fast.	Slow down.
Rocks traveling too far.	Drum turning too fast.	Slow engine RPM.

Specifications

MECHANICAL

MODEL
- Degelman Rock Rake 1500

TRACTOR REQUIREMENTS
- Approximately 40-80 HP (30-60 kW).
- Hydraulic output pressure 1500-2500 psi (10,300-17,300 kPa).
- 540 or 1000 RPM PTO.

ROCK RAKE DIMENSIONS
- Ground clearance 10 inches (250 mm).
- Working width 10 1/2 ft. (3.2 m)
- Transport width
  Wide: 15 1/2 ft. (4.7 m)
  Narrow: 7 ft 6 in. (2.3 m)
- Drum Length: 14 ft (4.3 m)

FRAME CONSTRUCTION
- .250 inches (6.4 mm) wall HSST

WHEEL/HUBS
- Two 9.5L x 15 - 6 ply rating tubeless tires.
- 6 bolt rim.
- 2 inch (51 mm) dia axles.

HYDRAULICS (OPTIONAL)
- Two 3 x 8 inch stroke.

SAFETY FEATURES
- Mechanical safety pin.
- Drives are fully shielded and guarded.
- Safety decals throughout.

DRUM SPECS
- Reversable/replaceable teeth.
- Drum/teeth dia. 20 1/2 inch (520 mm).
- Floating drum - spring loaded.

DRIVE COMPONENTS
- 1.81:1 Gearbox (540 PTO)
- 3:1 Gearbox (1000 PTO)
- Heavy duty drivelines
- #100 roller chain
- Heavy duty roller bearings

WEIGHT OF MACHINE
- 3500 lbs (1580 kg)

SPECIFICATIONS AND DESIGN SUBJECT TO CHANGE WITHOUT NOTICE

TORQUE SPECIFICATIONS

CHECKING BOLT TORQUE

The tables shown below give correct torque values for various bolts and capscrews. Tighten all bolts to the torques specified in chart unless otherwise noted. Check tightness of bolts periodically, using bolt torque chart as a guide. Replace hardware with the same strength (Grade/Class) bolt.

IMPERIAL TORQUE SPECIFICATIONS

(based on "Zinc Plated" values)



Size	Grade 5	Grade 8
	lb.ft (*N.m*)	lb.ft (*N.m*)
1/4"	**7 (*10*)**	**10 (*14*)**
5/16"	15 (*20*)	20 (*28*)
3/8"	**25 (*35*)**	**35 (*50*)**
7/16"	40 (*55*)	60 (*80*)
1/2"	**65 (*90*)**	**90 (*120*)**
9/16"	90 (*125*)	130 (*175*)
5/8"	**130 (*175*)**	**180 (*245*)**
3/4"	230 (*310*)	320 (*435*)
7/8"	**365 (*495*)**	**515 (*700*)**
1"	550 (*745*)	770 (*1050*)
1-1/8"	**675 (*915*)**	**1095 (*1485*)**
1-1/4"	950 (*1290*)	1545 (*2095*)
1-3/8"	**1250 (*1695*)**	**2025 (*2745*)**
1-1/2"	1650 (*2245*)	2690 (*3645*)

METRIC TORQUE SPECIFICATIONS

(based on "Zinc Plated" values)



Size	Class 8.8	Class 10.9
	lb.ft (*N.m*)	lb.ft (*N.m*)
M6	**7 (*10*)**	**10 (*14*)**
M8	16 (*22*)	23 (*31*)
M10	**30 (*42*)**	**45 (*60*)**
M12	55 (*75*)	80 (*108*)
M14	**90 (*120*)**	**125 (*170*)**
M16	135 (*185*)	195 (*265*)
M18	**190 (*255*)**	**270 (*365*)**
M20	265 (*360*)	380 (*515*)
M22	**365 (*495*)**	**520 (*705*)**
M24	460 (*625*)	660 (*895*)
M27	**675 (*915*)**	**970 (*1315*)**
M30	915 (*1240*)	1310 (*1780*)
M33	**1250 (*1695*)**	**1785 (*2420*)**
M36	1600 (*2175*)	2290 (*3110*)

HARDWARE/HOSE SPECIFICATIONS

Unless otherwise stated:

- Hardware - Hex, Plated GR5 UNC or P8.8 (metric)
- Hydraulic Hoses - 3/8 & 1/2, ends come with 3/4 JIC female swivel.

WHEEL NUT & WHEEL BOLT TORQUE

BOLT PATTERNS

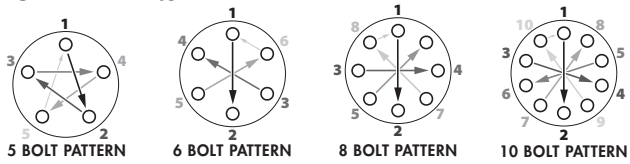

Wheel Nut/Bolt Torque

Size	lb.ft (N.m)
9/16	120-130 (165-175)
5/8	185-190 (250-260)
3/4	280-300 (380-405)

Wheel Tightening Procedure

1. Install and **hand tighten** nuts/bolts.
2. Tighten to approx **20% Torque** value using the 10 Bolt **Star or CrissCross** pattern shown above.
3. Tighten to **Full Torque** value using the **Star or CrissCross** pattern.
4. If applicable, install **Rear Locknuts** using **Wheel Torque Values**.

HYDRAULIC FITTING TORQUE

Hydraulic Fitting Torque*

Size	lb.ft (N.m)
1/2	34 (46)
3/4	75 (100)
7/8	90 (122)

* The torque values shown are based on lubricated connections as in reassembly.

Tightening Flare Type Tube Fittings

1. Check flare and flare seat for defects that might cause leakage.
2. Align tube with fitting before tightening.
3. Lubricate connection and hand tighten swivel nut until snug.
4. To prevent twisting the tube(s), use two wrenches. Place one wrench on the connector body and with the second tighten the swivel nut to the torque shown.

Parts - General Information

ORDERING PART REPLACEMENTS

Your authorized Degelman dealer can be contacted for ordering any replacement parts, decals, or manuals. Since many of our parts are specially designed specifically for the Rock Rake, we strongly recommend you always replace them with genuine Degelman parts only.

PUBLICATIONS

Additional copies of the manual is available through your local dealer. If the dealer is unable to assist you, contact Degelman Industries LP and order the part number below:

142274 Manual - RR1500



SAFETY DECAL REPLACEMENT

If Safety Decals have been damaged, removed, become illegible or parts replaced without decals, new decals must be applied. New decals are available from your authorized dealer free of charge. Please refer to the safety section of the manual for decal locations and descriptions.

TOUCH UP PAINT

To keep your Rock Rake looking new, you may wish to purchase Degelman Yellow aerosol paint for any touch ups. Contact your dealer to order the part number below:

133044 Degelman Yellow Aerosol Paint

PROOF OF OWNERSHIP

It is important to record the serial and model number of your Sidearm for proof of ownership and for any required service or maintenance assistance.

Your serial number is found on the serial number plate attached to the Rock Rake on the front of the center frame to the left of the hitch pole (shown in the photo above).

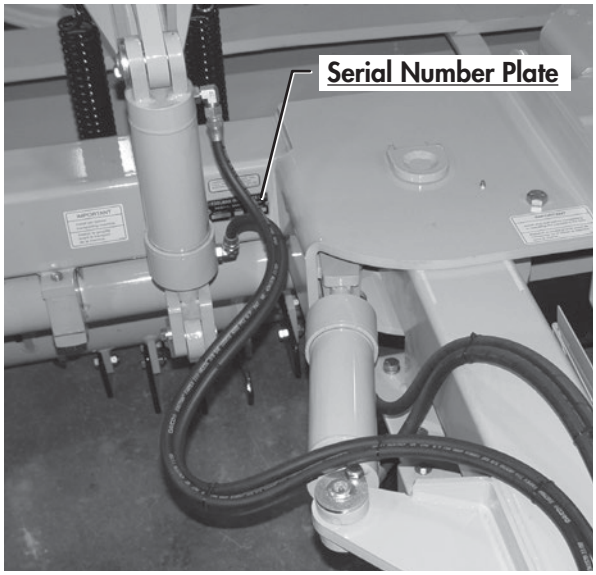

Serial Number _____

Owner _____

Model _____

Dealer _____

Dealer Phone # _____

PTO Speed

- ☐ 540 RPM
- ☐ 540 RPM (Municipal)
- ☐ 1000 RPM

Parts - Rockshaft, Spiral Drum & Chain Housing

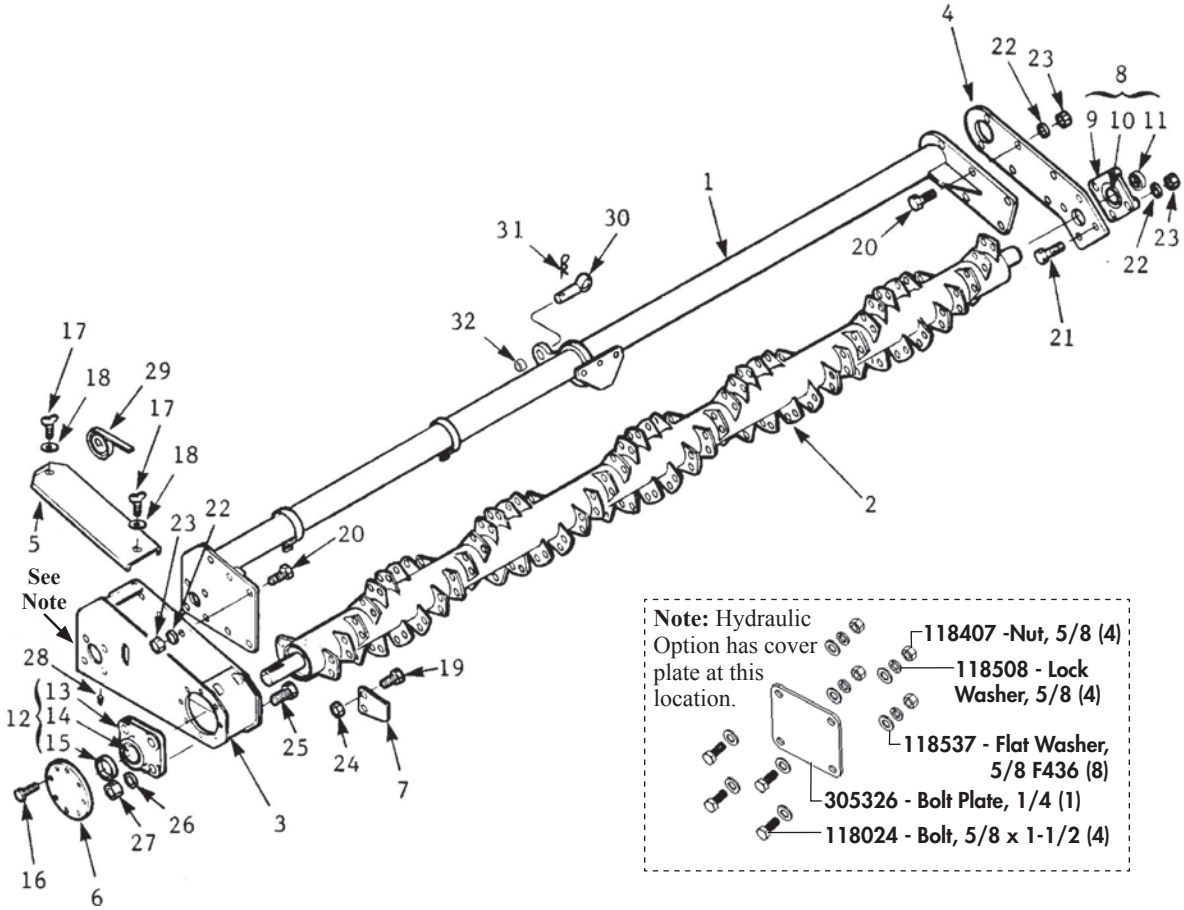

ITEM	PART No.	DESCRIPTION	QTY.
1	305100	Rockshaft - Assembly - RR	1
2	308000	Drum, Spiral - RR	1
3	305214	Chain Housing - Assembly - RR 1500	1
4	305110	Plate, End - Rockshaft - RR	1
5	305108	Lid, Chain Housing - RR	1
6	305130	Plate, Cover - Housing - RR	1
7	305167	Tooth - RR - 1/2 in. thick	83
8	117006	Bearing Unit, Flange - 4 hole - 2-7/16 in.	1
9	117107	Casting, Flange - 4 hole - 2-7/16 in.	1
10	117106	Insert, Bearing 2-7/16 in.	1
11	117022	Collar, Lock 2-7/16 in.	1
12	117115	Bearing Unit, Flange - 4 hole - 2-7/16 in. - heavy duty	1
13	117116	Casting, Flange - 4 hole - 2 7/16 in. - heavy duty	1
14	117117	Insert, Bearing 2-7/16 in. - heavy duty	1
15	117118	Collar, Lock 2-7/16 in. - heavy duty	1
16	118302	Capscrew, Hex 3/8 x 1 in. - self tapping	8
17	118231	Screw, Thumb 3/8 x 1-1/4 in. UNC, Plated	2
18	118511	Washer, Flat 3/8 in. Plated	2
19	118141	Bolt, Hex 5/8 x 1-3/4 in. UNC, Gr8, Plated - special shank	166
20	118026	Bolt, Hex 5/8 x 2 in. UNC, Gr5, Plated	11
21	118028	Bolt, Hex 5/8 x 2-1/2 in. UNC, Gr5, Plated	4
22	118508	Washer, Lock 5/8 in. Plated	19
23	118407	Nut, Hex 5/8 in. UNC, Gr5, Plated	19
24	118447	Nut, Lock 5/8 in. UNC, Gr5, Plated - Uni-torque	166
25	118163	Bolt, Hex 7/8 x 2-1/2 in. UNC, Gr5, Plated	4
26	118561	Washer, Lock 7/8 in. Plated	4
27	118431	Nut, Hex 7/8 in. UNC, Gr5, Plated	4
28	125005	Plug, Port 1/2 NPT(M) - steel	1
29	305113	Weather Strip 7/16 x 3/8 in. Roll	1
	*(128004	*Weather Strip 5/16 x 3/4 in. Roll - Previous)*	
30	305168	Pin Assembly 25.4 x 95mm (effective)	1
31	118848	Pin, Hair 5/32 in.	1
32	117087	Bushing, 1-1/4 OD x 1/8 W x 1 in.	1

Parts - Main Frame & Hitch Pole

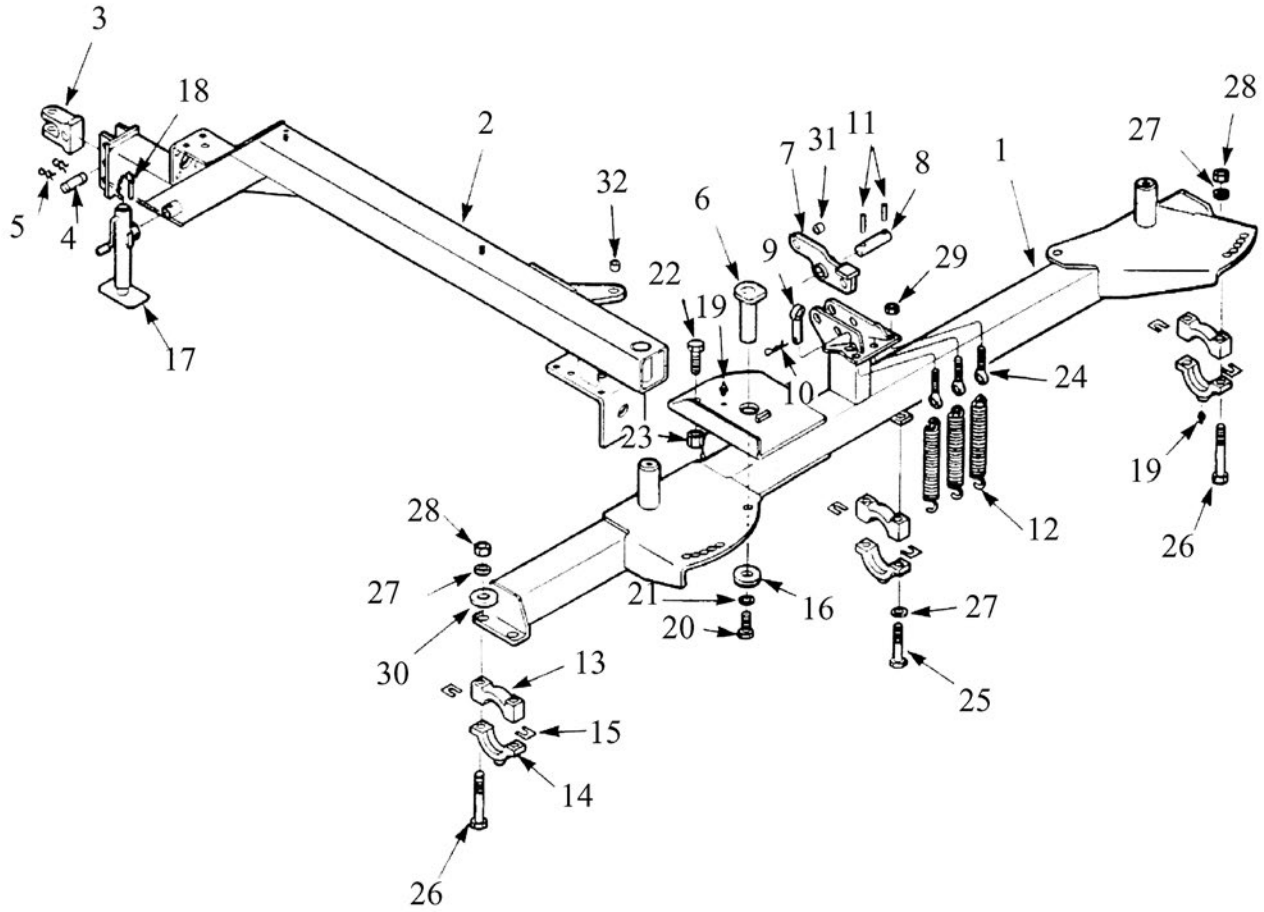

ITEM	PART No.	DESCRIPTION	QTY.
1	305217	Frame, Main - Assembly - RR 1500	1
2	305229	Pole, Hitch - Assembly - RR 1500 (includes Items #3, 4 & 5)	1
3	110002	Casting, Hitch Clevis	1
4	121944	Pin 25.4 x 110mm (effective) Plated - N/D Pin	1
5	118882	Pin, Hair 3/16 x 2-3/4 in. Plated - N/D Pin	2
6	305152	Pin Assembly 52 x 183mm (effective)	1
7	305232	Arm, Hydraulic Float - Assembly - RR 1500	1
8	313020	Pin 1-7/16 x 3-7/16 in. (effective)	1
9	305168	Pin Assembly 25.4 x 95mm (effective)	1
10	118848	Pin, Hair 5/32 in.	1
11	118845	Pin, Roll 5/16 x 2-1/2 in.	2
12	143001	Spring, Tension 14-7/8 in. x 29 Coil	3
13	110003	Casting, Bearing Base #207	3
14	110015	Casting, Bearing Cap #207 c/w Grease Fitting	3
15	611080	Shim 2 x 2 x 14 Gage - galvanized	6
16	229030	Washer, Flat 20 ID x 102 OD x 9mm	1
17	132005	Jack, Side Wind SWS-150-DTSF (includes Item #18)	1
18	118879	Pin, Hitch Jack 9/16 in. dia.	1
19	118336	Grease Fitting 1/4 - 28 AMF self-tap	4
20	118024	Bolt, Hex 5/8 x 1-1/2 in. UNC, Gr5, Plated	1
21	118508	Washer, Lock 5/8 in. Plated	1
22	117991	Bolt, Hex 3/4 x 1-1/2 in. Flange, UNF, Gr8, Plated	1
23	118449	Nut, Hex 3/4 in. UNF, Plated - 1 in. high	1
24	118241	Bolt, Eye 3/4 x 5-1/4 in. UNC, Gr5, Plated	3
25	118062	Bolt, Hex 3/4 x 5-1/2 in. UNC, Gr5, Plated	2
26	118158	Bolt, Hex 3/4 x 7 in. UNC, Gr5, Plated	4
27	118509	Washer, Lock 3/4 in. Plated	6
28	118410	Nut, Hex 3/4 in. UNC, Gr5, Plated	4
29	118422	Nut, Lock 3/4 in. UNC, Gr5, Plated	3
30	118516	Washer, Flat 3/4 in. Plated	2
31	117087	Bushing, 1-1/4 OD x 1/8 W x 1 in.	1
32	117110	Bushing, 1-1/4 OD x 1/8 W x 3/4 in.	2

Parts - Wheel Legs & Tires/Hubs & Spindles

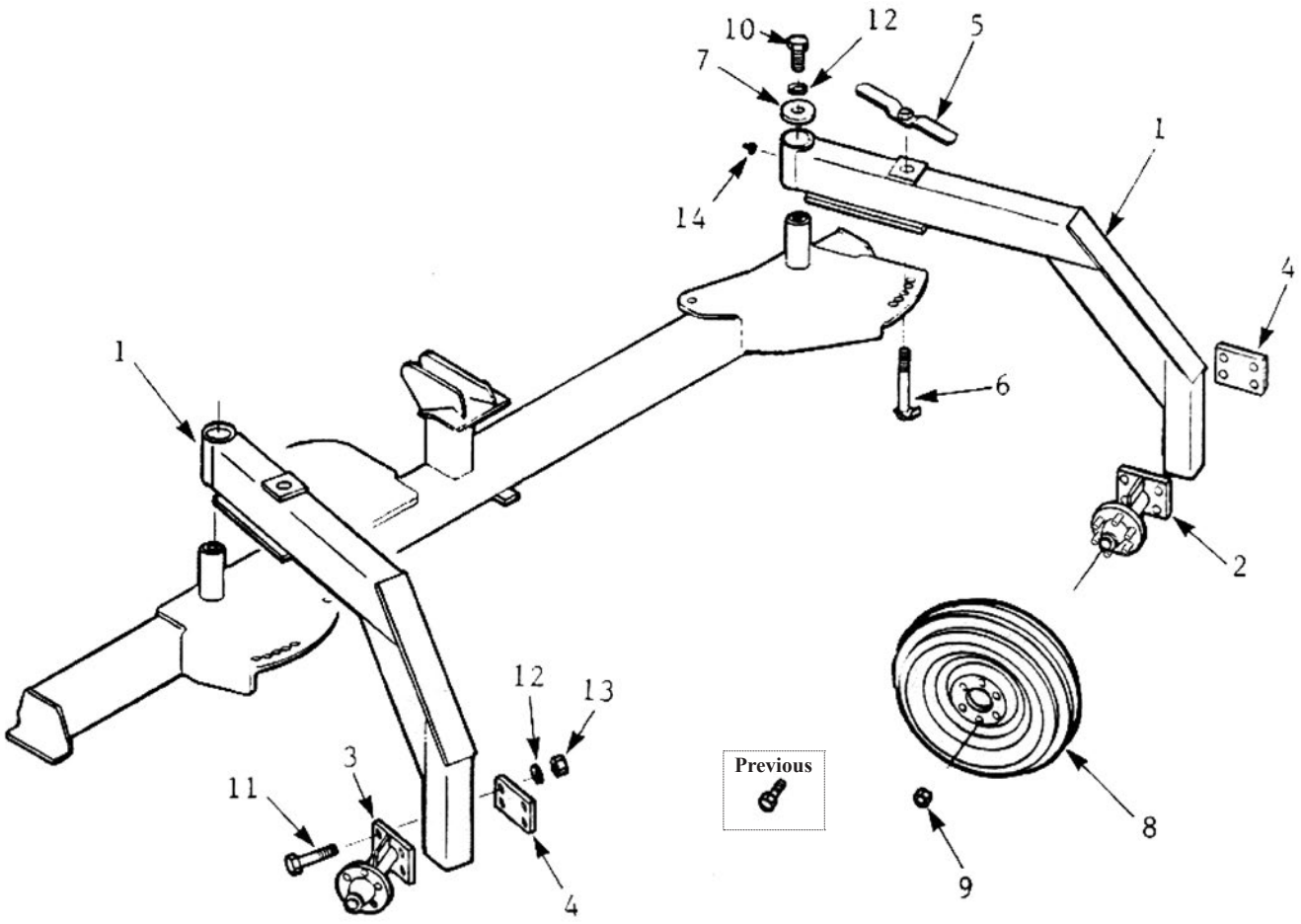

Torque, 9/16 Wheel Nut:
120-130 lb.ft (165-175 N.m)

ITEM	PART No.	DESCRIPTION	QTY.
1	305132	Leg, Wheel Assembly - RR	2
2	305210	Hub/Spindle Assembly - CTD618 - RR - Right Hand (straight)	1
3	305211	Hub/Spindle Assembly - CTD618 - RR - Left Hand (angled)	1
4	305231	Plate, Bolt - 4 hole - 89 x 118mm hole centers	2
5	305148	Nut, Wing Assembly - 1 in. UNC	2
6	305150	Bolt/Clip Assembly - 1 x 9 in. UNC	2
7	229030	Washer, Flat 20 ID x 102 OD x 9mm	2
8	131062	Wheel Assembly - 9.5L x 15 - 6 ply	2
9	131709	Nut, Wheel 9/16 - 18 UNF	12
	(*118914*	*Bolt, Wheel 9/16 x 1-3/4 in. UNF, Gr5, Plated - Previous)*	
10	118024	Bolt, Hex 5/8 x 1-1/2 in. UNC, Gr5, Plated	2
11	118117	Bolt, Hex 5/8 x 5 in. UNC, Gr5, Plated	8
12	118508	Washer, Lock 5/8 in. Plated	10
13	118407	Nut, Hex 5/8 in. UNC, Gr5, Plated	8
14	118336	Grease Fitting 1/4 - 28 AMF self-tap	2

Parts - Wheel Legs & Tires/Hubs & Spindles

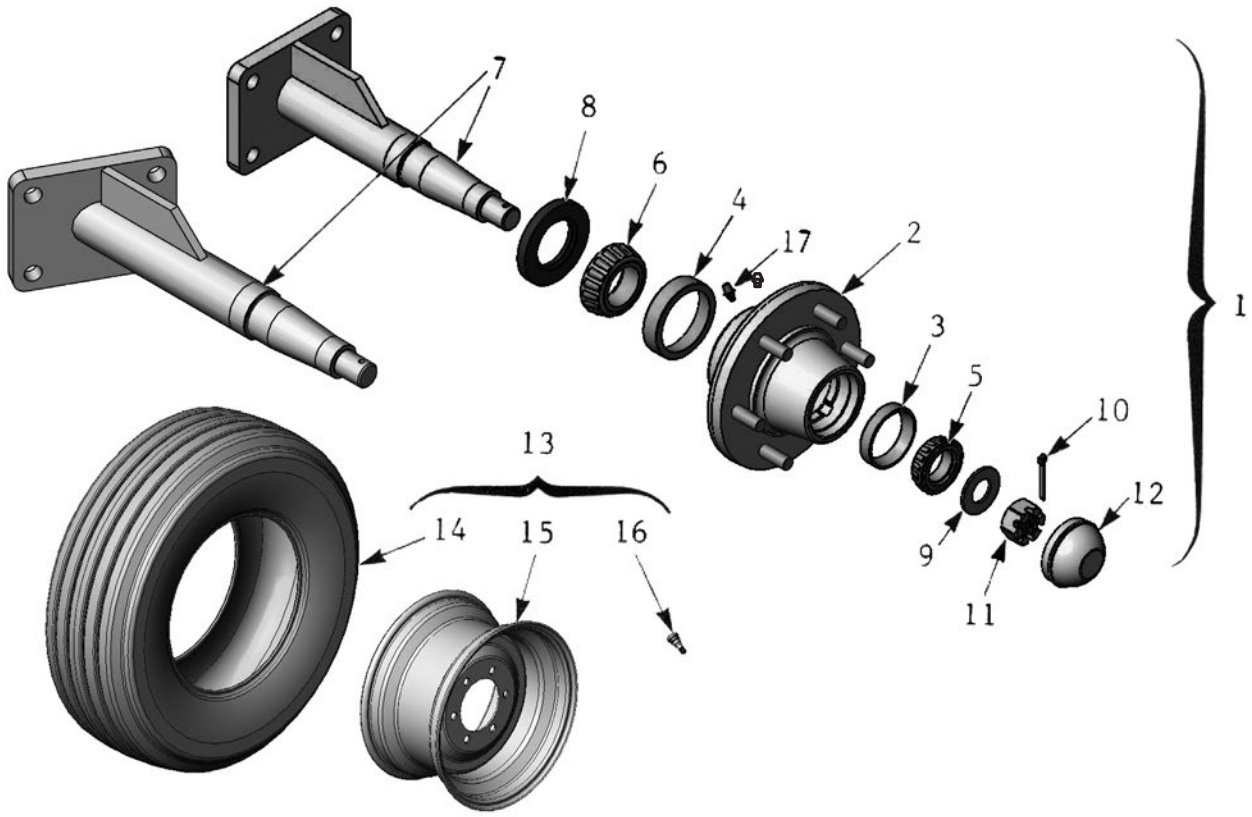

ITEM	PART No.	DESCRIPTION	QTY.
1	305210	Hub/Spindle Assembly - H618 - RR - Right Hand (straight)	1
	305211	Hub/Spindle Assembly - H618 - RR - Left Hand (angled)	
2	131700	Hub CTD618 c/w Cups	1
3	131025	Cup, Bearing # LM48510 - 2.563 in. OD	1
4	131023	Cup, Bearing # 25520 - 3.265 in. OD	1
5	131024	Cone, Bearing # LM48548 - 1.375 in. ID	1
6	131022	Cone, Bearing # 25580 - 1.750 in. ID	1
7	305140	Spindle Assembly - RR - Right Hand w/o Hub	1
	305141	Spindle Assembly - RR - Left Hand w/o Hub	
8	131026	Seal, Dust CR # 20140 - 2.000 in. ID	1
9	131020	Washer, Flat 1 in. SAE	1
10	118835	Pin, Cotter 3/16 x 1-1/2 in.	1
11	118423	Nut, Slotted 1 in. UNS, Gr5	1
12	131701	Cap, Hub CTD618 - BLK	1
13	131062	Wheel Assembly 9.5L x 15 - 6 Ply	2
14	127003	Tire 9.5L x 15 - 6 Ply Tubeless	1
15	131001	Rim, Wheel 15 x 8 - 6 Bolt	1
16	127006	Valve Stem TR415	1
17	118336	Grease Fitting 1/4 - 28 AMF self-tap	1

Parts - Hydraulic Layout / Hydraulic Cylinder (Optional)

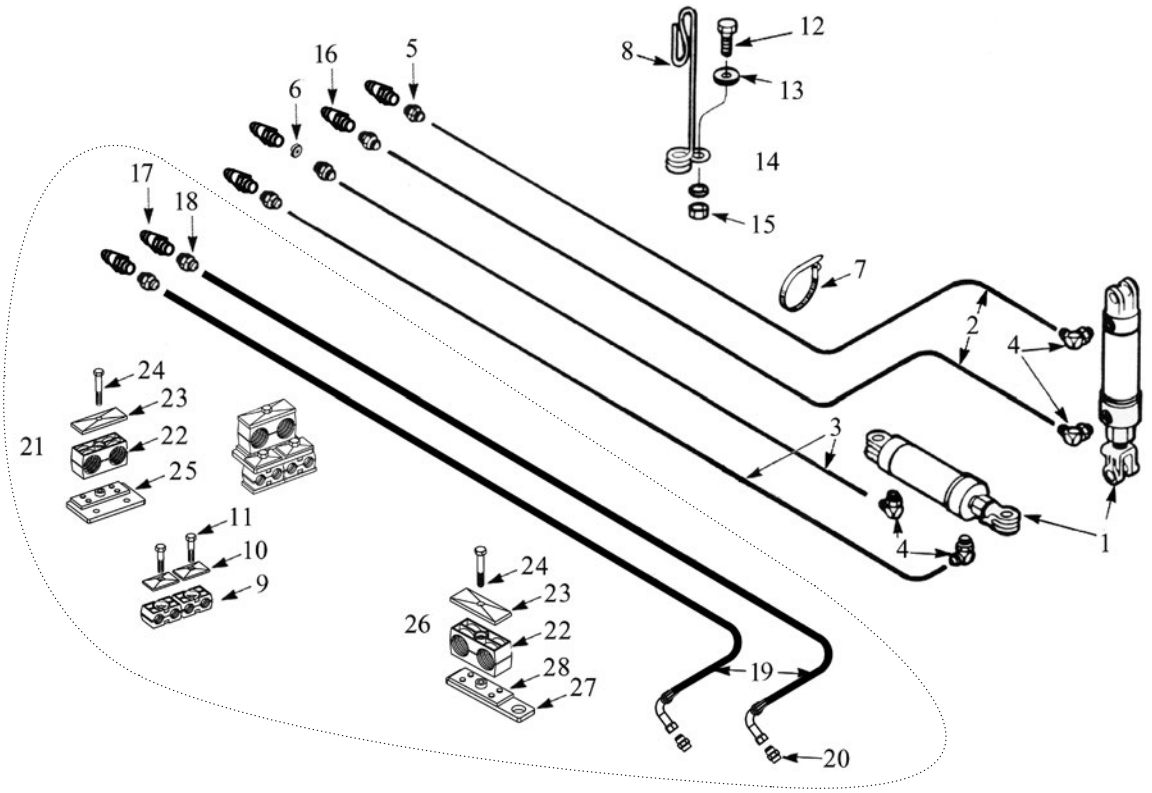

ITEM	PART No.	DESCRIPTION	QTY.
1	123198	Cylinder, Hydraulic 3 x 8 x 1-1/4 in. - Monarch	2
	(*122739*	*Cylinder, Hydraulic 3 x 8 in. - DIL - Previous)*	
2	126508	Hose 3/8 x 183 in. 2WB - 3/4 JIC(F-SW)	2
3	126531	Hose 3/8 x 156 in. 2WB - 3/4 JIC(F-SW)	2
4	141504	Elbow, 900 3/4 JIC(M) x 3/4 ORB(M)	4
5	141515	Nipple 3/4 ORB(M) x 3/4 JIC(M)	4
6	141506	Orifice Plate - .0700 ID	1
7	133007	Tie, Hose - Plastic - Releasable 1/16 x 1/2 x 22 in.	1
8	143111	Holder, Hose - Flexible	1
9	780346	Hyd. Hose Clamp - 3/8 - 2 halves/set	4
10	780279	Top Plate, Hyd. Hose Clamp 3/8	4
11	118317	Bolt, Hex 5/16 x 1-3/8 in. UNC, Gr5, Plated	4
12	118026	Bolt, Hex 5/8 x 2 in. UNC, Gr5, Plated	1
13	118514	Washer, Flat 5/8 in. Plated	1
14	118508	Washer, Lock 5/8 in. Plated	1
15	118407	Nut, Hex 5/8 in. UNC, Gr5, Plated	1
16	141581	Coupler, Tip 3/4 ORB	4
Hydraulic Motor Option Only			
17	141581	Coupler, Tip 3/4 ORB	2
18	141591	Adaptor 3/4 ORB(M) x 7/8 JIC(M)	2
19	126669	Hose 3/4 x 220 in. 2WB, 7/8 - 10 JIC(F-SW) - 1-1/16 - 12 JIC(F-SW)	2
20	141592	Adaptor 1-1/16 ORB(M) x 1-1/16 JIC(M)	2
21	305334	Assembly, Hydraulic Hose Mount Consists of items 22, 23, 24, & 25	2
22	305329	Hyd. Hose Clamp - 3/4 - 2 halves/set	1
23	305330	Top Plate, Hyd. Hose Clamp 3/4	1
24	118121	Bolt, Hex 5/16 x 2 in. UNC, Gr5, Plated	1
25	305333	Bolt Plate, 1/4	1
26	305336	Assembly, Hydraulic Hose Mount Consists of items 22, 23, 24, 27, & 28	1
22	305329	Hyd. Hose Clamp - 3/4 - 2 halves/set	1
23	305330	Top Plate, Hyd. Hose Clamp 3/4	1
24	118121	Bolt, Hex 5/16 x 2 in. UNC, Gr5, Plated	1
27	305335	Bolt Plate, 1/4	1
28	305328	Weld Plate, 3/4 Hyd Block	1

Parts - Hydraulic Layout / Hydraulic Cylinder (Optional)

123198 - Cylinder, Monarch - 3 x 8 x 1-1/4

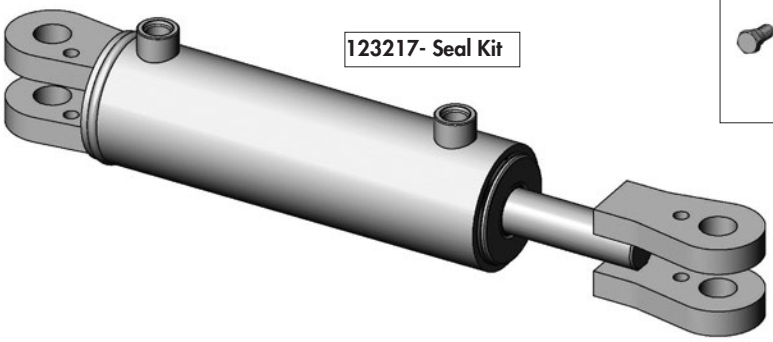

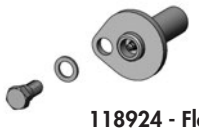

Requires:
118930 - Pin, 1 x 2-13/16 (2)
118924 - Flat washer, .59" ID x .9" OD (2)
118796 - Shoulder bolt, 1/2 GR8 UNC (2)

PREVIOUS: ***122739 - Cylinder, 3 x 8 x 1-1/4***

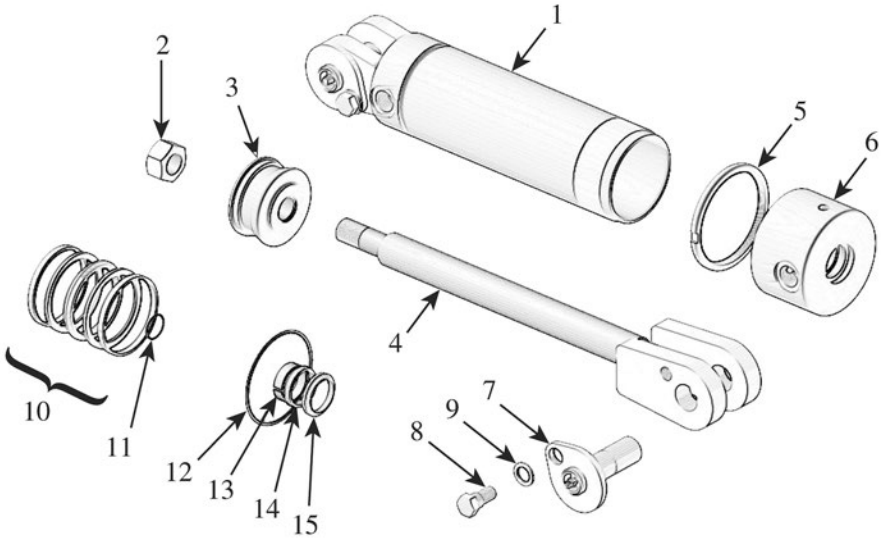

ITEM	PART No.	DESCRIPTION	QTY.
-	122739	Cylinder Hydraulic 3 x 8 in. - DIL	a/r
1	122802	Barrel Assembly 3 x 8 in. - DIL	1
2	118441	Nut, Lock 7/8 in. UNF, Gr5, Plated, Uni-torque	1
3	122563	Piston 3 in. Cylinder - Tri-Seal c/w w/Ring - DIL	1
4	122085	Rod Assy - Cyl 3 x 8 - DIL	1
5	122558	Ring, Lock - 3 in. Cyl - DIL	1
6	122799	Cap, Open 3 in. Cylinder 1-1/4 in. Rod - DIL	1
7	118930	Pin Assy, Clevis Pin	2
8	118796	Bolt, Shoulder - 1/2 UNC, Gr8, Plated	2
9	118924	Washer, Flat .905 OD x .591 ID x .079 in.	2
--	122800	Kit, Seal 3 in. Cylinder 1-1/4 in. Rod - DIL	a/r
10	--	Seal, Piston - 3 in. - 5 part	1
11	--	Seal, O-Ring	1
12	--	Seal, O-Ring	1
13	--	Seal, Wear Ring	1
14	--	Seal, Rod	1
15	--	Seal, Rod Wiper	1

Parts - Drive Components Layout

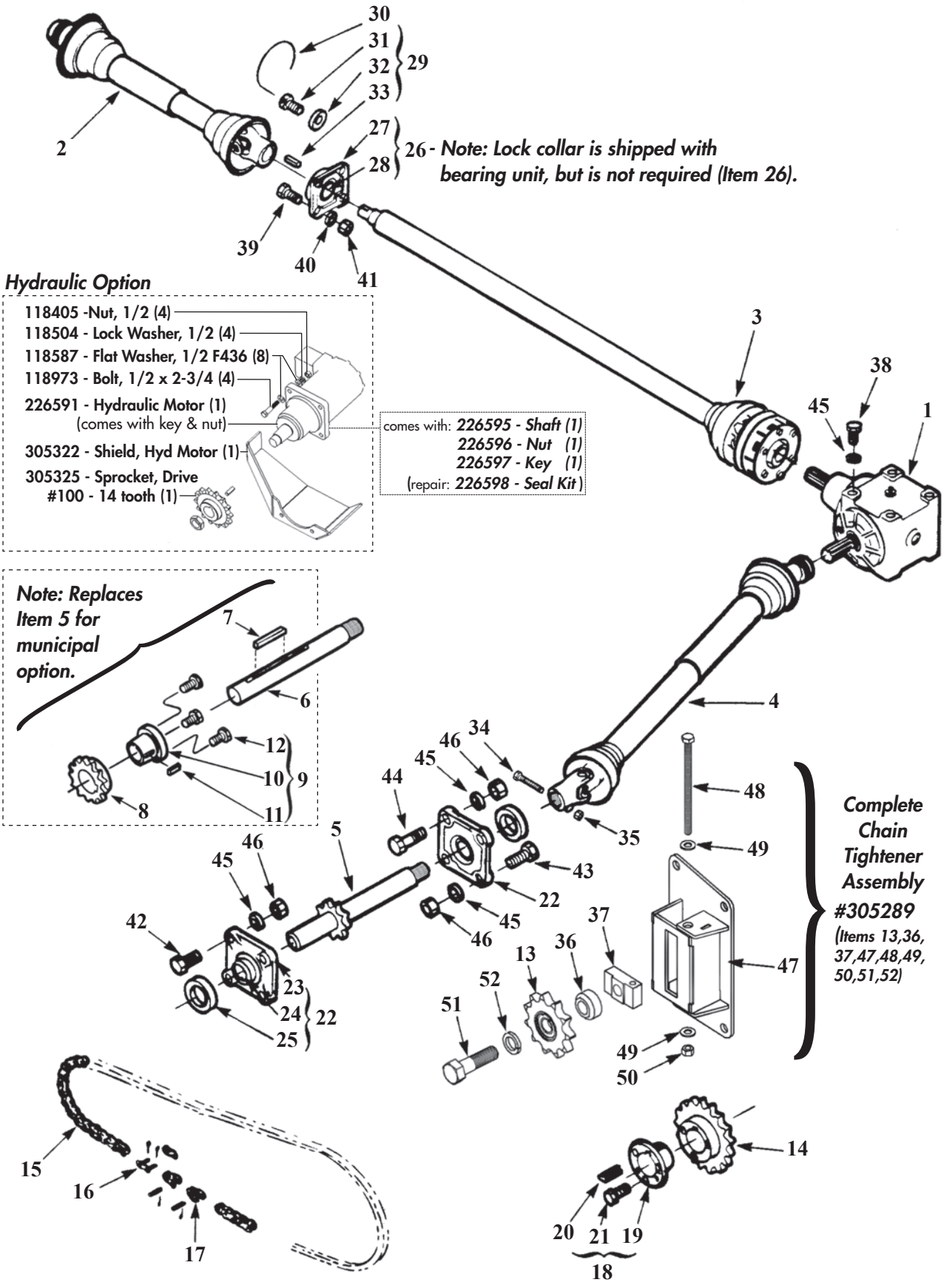

Parts - Drive Components Layout

ITEM	PART No.	DESCRIPTION	QTY.
		(Hydraulic Option Model only includes items marked with " * ")	
1	or 119574	Gear Box 1.81:1 - Prairie Gear - Splined (540 PTO)	1
	or 119577	Gear Box 3.08:1 - Prairie Gear - Splined (1000 PTO)	
2	or 119995	Shaft, Slider - 1-5/16 Bore Yoke & 6 Spline Q.D. (540 PTO)	1
	or 119980	Shaft, Slider - 1-5/16 Bore Yoke & 21 Spline Q.D. (1000 PTO)	
3	119985	Drive Sft - C/W Non-Adjusting Clutch 9000 in. lb.	1
4	119990	Shaft, Slider - 1-3/4 20 Spline Yoke & 20 Spline Q.D.	1
5	305197	Shaft, Input Assembly - 9 Tooth - 20 Spline - (540/1000 PTO)	1
	- or -		
6	305198	Shaft, Input - Keyway - 20 Spline - (Municipal 540)	1
7	119117	Key - 1/2 x 1/2 x 3 in. long (Municipal 540)	1
8	120030	Sprocket 100Q - 14 Tooth - tapered bore (Municipal 540)	1
9	122031	Kit, Split Tapered Bushing 2 in. dia. (Municipal 540)	1
		Consists of items 10, 11, & 12	
10	--	Bushing, Split Tapered	1
11	--	Key, 3/8 x 1/2 x 1 in. long	1
12	118129	Bolt, Hex 3/8 x 1 1/4 in. UNC, Gr5, Plated	3
13*	122006	Sprocket, Idler 100A - 11 Tooth c/w Bearing	1
14	or 122030	Sprocket 100Q - 14 Tooth - tapered bore (540 PTO)	1
	or 122018	Sprocket 100Q - 17 Tooth - tapered bore (1000/Municipal 540 PTO)	
14*	305338	Sprocket 100Q - 12 Tooth - tapered bore (Hydraulic Option)	1
15*	or 120017	Chain, Roller #100 - 51 Link (540/1000 PTO)	1
	or 120013	Chain, Roller #100 - 55 Link (Municipal 540 PTO/Hyd Option)	
16*	120005	Link, Connector #100 - Std	1
17*	120006	Link, Offset #100 - Std	1(540) or 2(1000)
18*	122021	Kit, Split Taper Bushing 2 7/16 in. Q1	1
		Consists of items 19, 20, & 21	
19*	--	Bushing, Split Tapered	1
20*	122020	Key, Stepped 5/8 x 11/16 x 2 1/2 in.	1
21*	118129	Bolt, Hex 3/8 x 1 1/4 in. UNC, Gr5, Plated	3
22	117004	Bearing Unit, Flange - 4 hole - 2 in.	2
23	117105	Casting, Flange - 4 hole - 2 7/16 in. Bearing	1
24	117104	Insert, Bearing 2 in.	1
25	117088	Collar, Lock 2 in. Bearing 3 in. OD	1
26	117089	Bearing Unit, Flange - 4 hole - 1 3/8 in.	1
27	117091	Casting, Flange - 4 hole - 1 3/8 in. Bearing	1
28	117090	Insert, Bearing 1 3/8 in.	1
29	119340	Bag, Hdw - RR - supplied by Weasler	1
30	--	Tie Wire	1
31	--	Bolt, Hex - drilled head 1/2 x 1/4 in. UNF	1
32	--	Washer, Flat 1 1/2 OD x 33/64 ID x 1/4 in, thick	1
33	--	Key 3/8 x 5/16 x 1 3/8 in. long	1
34	118031	Bolt, 5/8 x 3 UNC GR8	1
35	118447	Locknut, 5/8 UNC GRC	1
36	305298	Spacer, Sprocket - Chain Tightener, Plated	1
37	305297	Block, Threaded Adjustment - Chain Tightener	1
38	118645	Bolt, Hex 5/8 x 1 1/4 in. UNC, Gr5, Plated	4
39	118014	Bolt, Hex 1/2 x 2 in. UNC, Gr5, Plated	4
40	118504	Washer, Lock 1/2 in. Plated	8
41	118405	Nut, Hex 1/2 in. UNC, Gr5, Plated	8
42	118026	Bolt, Hex 5/8 x 2 in. UNC, Gr5, Plated	4
43	118028	Bolt, Hex 5/8 x 2 1/2 in. UNC, Gr5, Plated	2
44	118030	Bolt, Hex 5/8 x 3 in. UNC, Gr5, Plated	2
45	118508	Washer, Lock 5/8 in. Plated	12
46	118407	Nut, Hex 5/8 in. UNC, Gr5, Plated	8
47*	305290	Holder, Chain Tightener - Assembly	1
48*	118944	Bolt, Hex 1/2 x 8 in. UNC, Gr5, Plated - Full Thread	1
49*	118587	Washer, Flat 1/2 SAE Plated	2
50*	118729	Nut, Lock 1/2 in. UNC, Gr5, Plated - Unitorque	1
51*	118089	Bolt, Hex 1 x 3-1/2 in. UNC, Gr5, Plated	1
52*	118510	Washer, Lock 1 in. Plated	1

Parts - Gearbox 1.81:1 (540 PTO) - Prairie Gear

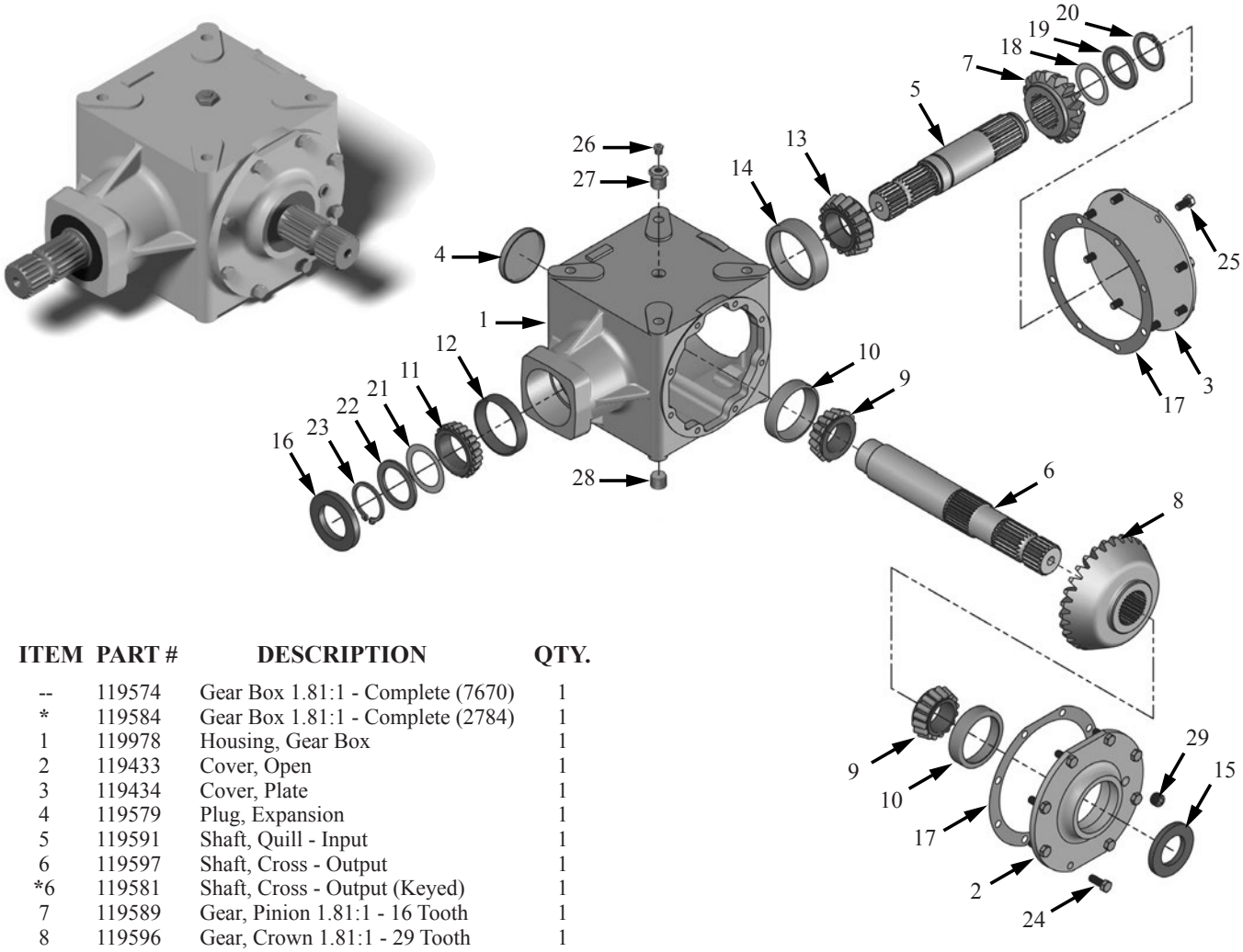

ITEM	PART #	DESCRIPTION	QTY.
--	119574	Gear Box 1.81:1 - Complete (7670)	1
*	119584	Gear Box 1.81:1 - Complete (2784)	1
1	119978	Housing, Gear Box	1
2	119433	Cover, Open	1
3	119434	Cover, Plate	1
4	119579	Plug, Expansion	1
5	119591	Shaft, Quill - Input	1
6	119597	Shaft, Cross - Output	1
*6	119581	Shaft, Cross - Output (Keyed)	1
7	119589	Gear, Pinion 1.81:1 - 16 Tooth	1
8	119596	Gear, Crown 1.81:1 - 29 Tooth	1
*8	119590	Gear, Crown 1.81:1 - 29 Tooth	1
9	119435	Cone, Bearing #25581	2
10	131023	Cup, Bearing #25520	2
11	119592	Cone, Bearing #LM104949	1
12	119593	Cup, Bearing #LM104912	1
13	131182	Cone, Bearing #3780	1
14	119437	Cup, Bearing #3730	1
15	119442	Seal, Oil (#CR17678)	1
16	119585	Seal, Oil	1
17	119451	Gasket, Cover Shim .007 in.	A/R
18	119450	Shim, .007 x 1.75 in.	A/R
19	119441	Washer, 1.75 ID x .176 in.	1 (* 2)
20	119440	Ring, Snap (# 5160-175)	1 (* 2)
21	119586	Shim	A/R
22	119588	Washer, 2 ID x .134 in.	1
23	119587	Ring, Snap (# 5160-200)	1
24	118005	Bolt, Hex 3/8 x 1 in. UNC, Gr5, PL	8
25	118003	Bolt, Hex 3/8 x 3/4 in. UNC, Gr5, PL	8
26	119020	Vent, Pressure Relief 1/8 NPT(M)	1
27	119021	Reducer 1/8 NPT(F) x 1/2 NPT(M)	1
28	119448	Plug, Port 1/2 NPT(M) Allen Head	1
29	119447	Plug, Port 3/8 NPT(M) Allen Head	1
*30	119439	Spacer, Tube	1
*31	119446	Key 3/8 x 3/8 x 1.46 in.	1

*** Keyed Output Shaft/Gear Model**

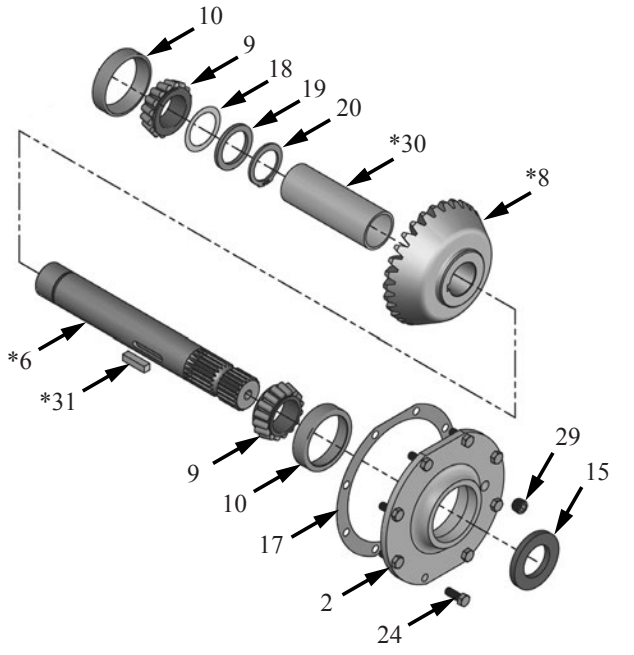

Parts - Gearbox 3.08:1 (1000 PTO) - Prairie Gear

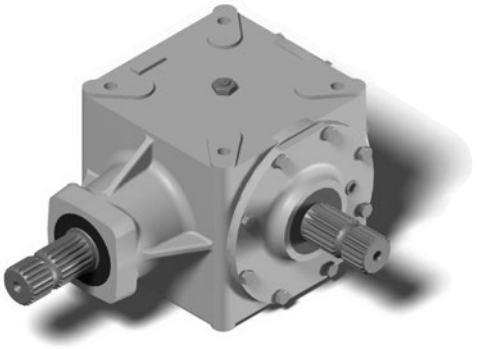

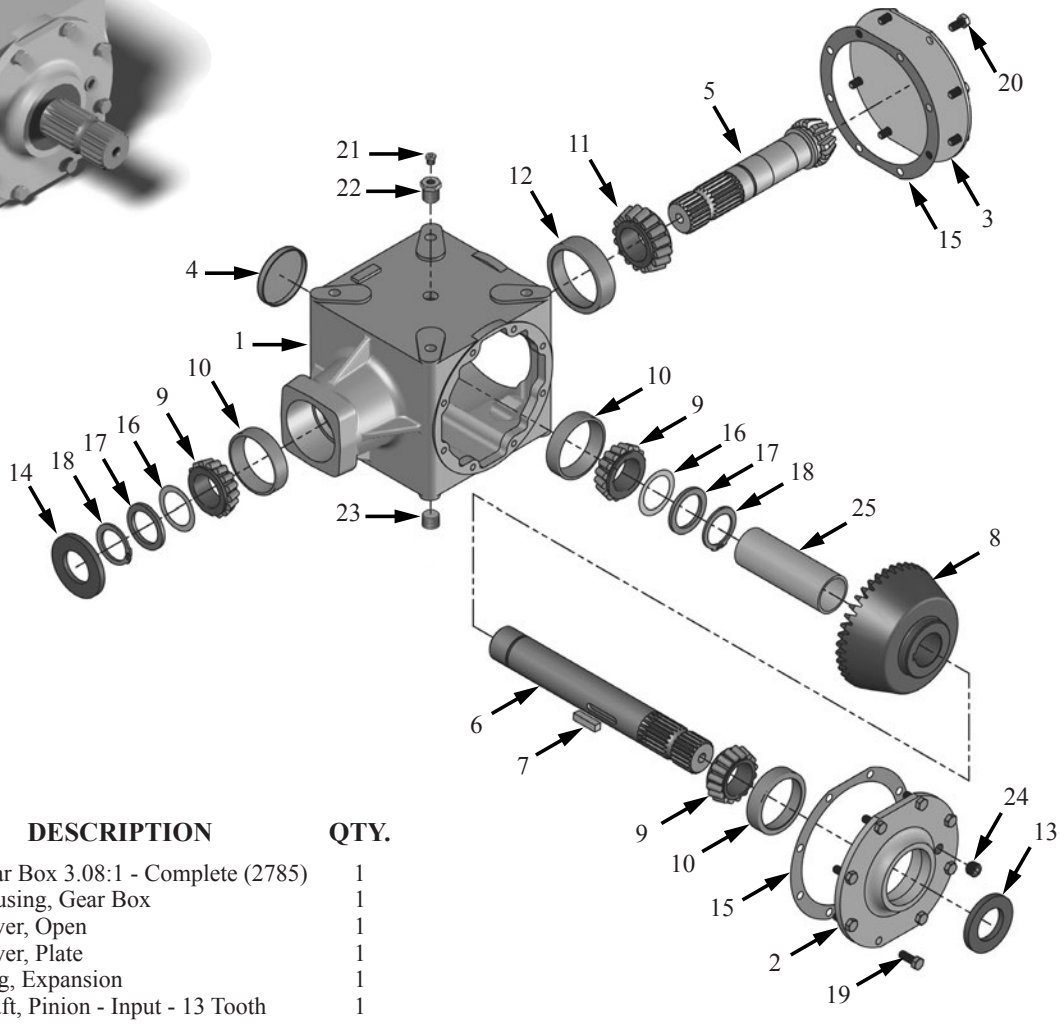

ITEM	PART #	DESCRIPTION	QTY.
--	119577	Gear Box 3.08:1 - Complete (2785)	1
1	119978	Housing, Gear Box	1
2	119433	Cover, Open	1
3	119434	Cover, Plate	1
4	119579	Plug, Expansion	1
5	119582	Shaft, Pinion - Input - 13 Tooth	1
6	119581	Shaft, Cross - Output (Keyed)	1
7	119446	Key 3/8 x 3/8 x 1.46 in.	1
8	119580	Gear, Crown 3.08:1 - 40 Tooth	1
9	119435	Cone, Bearing #25581	3
10	131023	Cup, Bearing #25520	3
11	119436	Cone, Bearing #3782	1
12	119437	Cup, Bearing #3730	1
13	119442	Seal, Oil (#CR17678)	1
14	119443	Seal, Oil	1
15	119451	Gasket, Cover Shim .007 in.	A/R
16	119450	Shim, .007 x 1.75 in.	A/R
17	119441	Washer, 1.75 ID x .176 in.	2
18	119440	Ring, Snap (# 5160-175)	2
19	118005	Bolt, Hex 3/8 x 1 in. UNC, Gr5, PL	8
20	118003	Bolt, Hex 3/8 x 3/4 in. UNC, Gr5, PL	8
21	119020	Vent, Pressure Relief 1/8 NPT(M)	1
22	119021	Reducer 1/8 NPT(F) x 1/2 NPT(M)	1
23	119448	Plug, Port 1/2 NPT(M) Allen Head	1
24	119447	Plug, Port 3/8 NPT(M) Allen Head	1
25	119439	Spacer, Tube	1

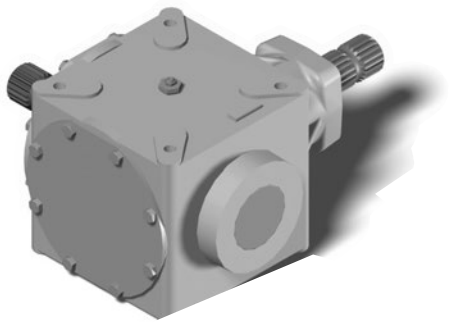

Parts - Slider Shaft c/w Quick Disconnect - (Weasler - 540 & 1000 PTO)

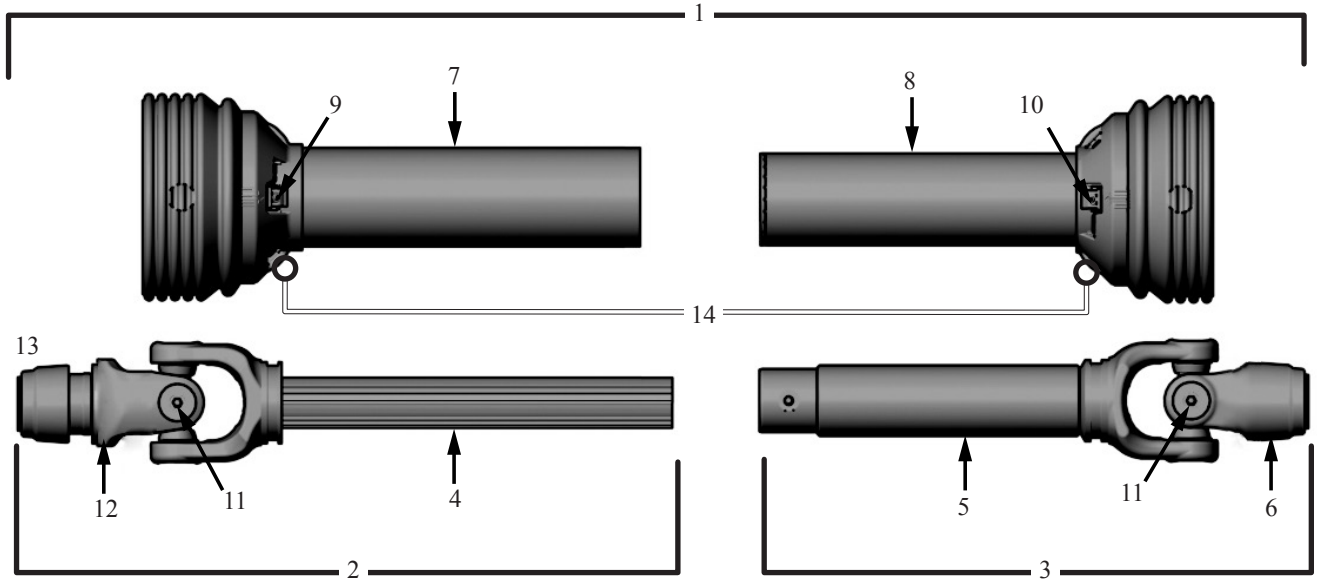

ITEM	PART No.	DESCRIPTION	QTY.
1	119995	Shaft, Slider 29.5 in. (overall) - Weasler - (6 Spline Q.D. - 540 PTO)	1
	119980	Shaft, Slider 29.5 in. (overall) - Weasler - (21 Spline Q.D. - 1000 PTO)	
2	160207	Shaft, Outer Assembly - Weasler - c/w Guard (6 Spline Q.D. - 540 PTO)	1
	160217	Shaft, Outer Assembly - Weasler - c/w Guard (21 Spline Q.D. - 1000 PTO)	
-or-			
without guard	160208	Shaft, Outer Assembly - Weasler - (6 Spline Q.D. - 540 PTO)	a/r
	160218	Shaft, Outer. Assembly - Weasler - (21 Spline Q.D. - 1000 PTO)	
3	160209	Shaft, Inner Assembly - Weasler - c/w Guard - (1-5/16 Yoke)	1
-or-	160210	Shaft, Inner Assembly - Weasler - without Guard - (1-5/16 Yoke)	a/r
4	160211	Yoke & Shaft - Weasler - #99-23438	1
5	160215	Yoke & Tube - Weasler - #98-23438	1
6	160216	Yoke 1 5/16 in. Bore - 1.313 Keyed - Weasler - #44011-1212	1
7	160213	Shield, Outer Guard - Weasler - #97-23438	1
8	160214	Shield, Inner Guard - Weasler - #96-23438	1
9	160212	Outer Guard Repair Kit - Weasler - #19-15130	1
10	119883	Inner Guard Repair Kit - Weasler - #19-15121	1
11	119881	Kit, Cross and Bearing - 44E-#03-15214	2
12	119893	Yoke 1 3/8 in. Q.D. - 6 Spline - Weasler - 540 PTO)	1
	119880	Yoke 1 3/8 in. Q.D. - 21 Spline - Weasler - 1000 PTO	
13	119357	Kit, Repair Safety Slide Lock - Q.D.	a/r
14	160206	Driveline Shield Guard Set - Inner & Outer	a/r

Parts - Drive Shaft c/w Non-Adjusting Clutch - (Weasler - 9000 in.lbs)

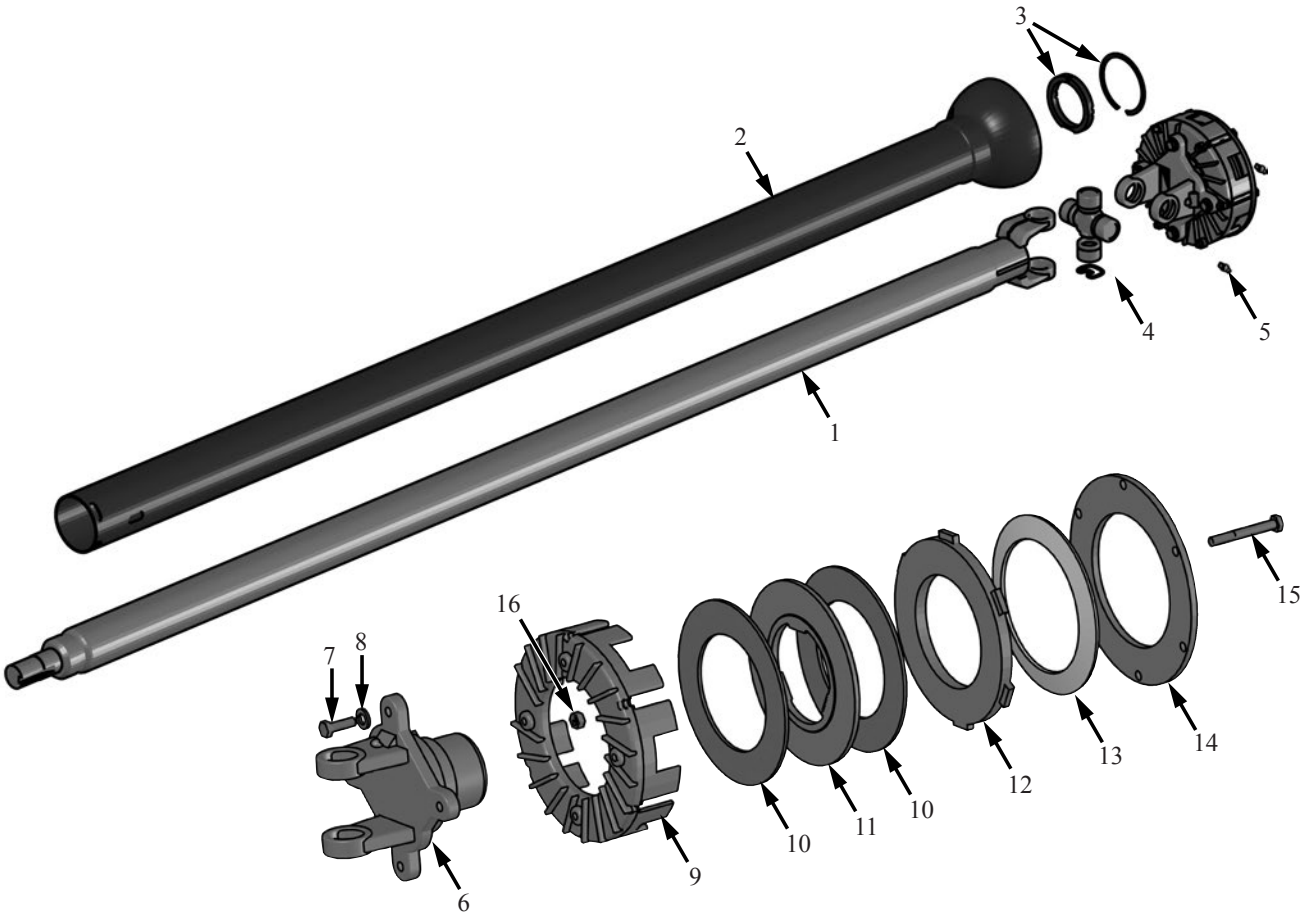

ITEM	PART No.	DESCRIPTION	QTY.
--	119985	Drive Sft - C/W Non-Adjusting Clutch 9000 in. lb.	a/r
1	160222	Yoke/Shaft Assy - WSLR (#98-23440)	1
2	160221	Shield, Outer - 44E (#96-23440)	1
3	119538	Repair Kit, Nylon - WSLR (#19-15129)	1
4	119881	Kit, Cross and Bearing - 44E (#03-15214)	1
5	118335	Grease Ftg 1/4 - 28 AMNF-STR	1
6	119528	Yoke/Hub - 1-3/4 20 Spline - WSLR (#38-60165)	1
7	118792	Bolt, Hex 5/16 x 1 UNC GR8 PL	4
8	118530	Washer, Lock 5/16 PL	4
9	119374	Housing, Clutch - WSLR (#80281-1000)	1
10	119375	Disc, Friction - WSLR (#11-11167)	2
11	119376	Plate, Separator - WSLR (#80883-1000)	1
12	119377	Plate, Pressure - WSLR (#80311-1000)	1
13	119378	Spg, Disc - WSLR (#23-15039) - 9000 lb	1
14	119379	Plate, Compression - WSLR (#38-40075)	1
15	118783	Bolt, Hex 5/16 x 2-1/2 UNC GR8 PL	6
16	118427	Nut, Hex 5/16 UNC GR5 PL	6
--	119373	Non-Adjusting Friction Pack-9000 in. lb. (includes items 7 to 16)	a/r

Parts - Slider Shaft c/w Quick Disconnect - (Weasler)

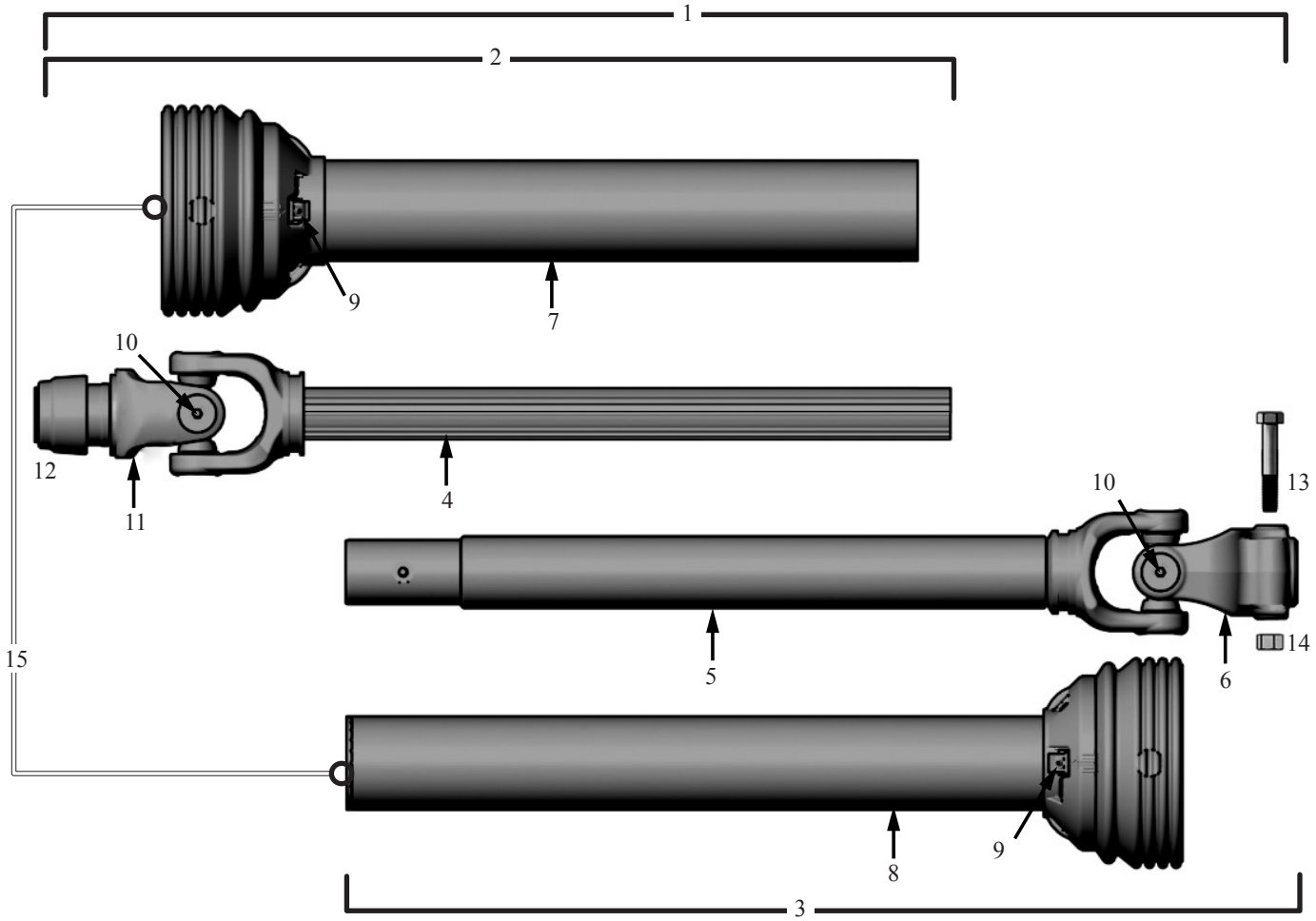

ITEM	PART No.	DESCRIPTION	QTY.
1	119990	Shaft, Slider Assembly - Weasler - (1-3/4 Bore Yoke & 20 Spline Q.D.)	1
2	160224	Shaft, Outer Assembly - Weasler - 20 Spline Q.D.- (with Guard)	1
-or-	160225	Shaft, Outer Assembly - Weasler - 20 Spline Q.D.- (without Guard)	a/r
3	160226	Shaft, Inner Assembly - Weasler - 1-3/4 Yoke - (with Guard)	1
-or-	160227	Shaft, Inner Assembly - Weasler - 1-3/4 Yoke - (without Guard)	a/r
4	160228	Yoke & Shaft - Weasler - #99-23441	1
5	160231	Yoke & Tube - Weasler - #98-23441	1
6	119492	Yoke 1 3/4 in. - 20 Spline - Weasler - #44250-1000	1
7	160229	Shield, Outer Guard - Weasler - #97-23441	1
8	160230	Shield, Inner Guard - Weasler - #96-23441	1
9	119883	Kit, Nylon Repair - Weasler - #19-15121	1
10	119881	Kit, Cross and Bearing - 44E-#03-15214	2
11	119896	Yoke 1 3/4 in. 20 Spline Q.D. - Weasler - #44211-1004	1
12	119520	Kit, Repair Safety Slide Lock - Q.D.	a/r
13	118031	Bolt, 5/8 x 3 UNC GR8 (not included in above kits)	1
14	118447	Locknut, 5/8 UNC GRC (not included in above kits)	1
15	160223	Driveline Shield Guard Set - Inner & Outer	a/r

Parts - Rock Guard Units

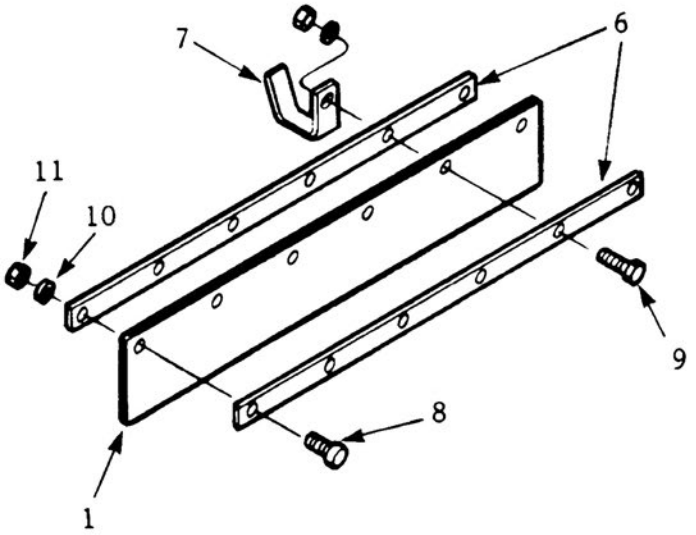

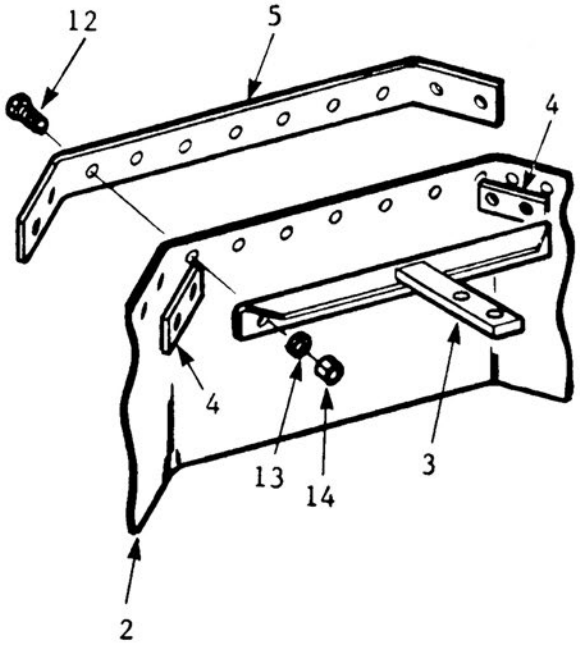

ITEM	PART No.	DESCRIPTION	QTY.
1	128010	Flap, Rock Guard 230 x 1448mm	1
2	305240	Flap, Rock Guard 686 x 1473mm	1
3	305238	Bracket, Stone Guard - RR 1500	1
4	305241	Bar, Bolt - 2 hole - 140mm hole centres	2
5	305242	Bar, Bolt - 11 hole - 139.7mm hole centres	1
6	235040	Strap, Flap 57 in. long	2
7	305164	Bracket, Drive Shaft Support - RR	1
8	118136	Bolt, Hex 3/8 x 1 1/2 in. UNC, Gr5, Plated	5
9	118087	Bolt, Hex 3/8 x 2 in. UNC, Gr5, Plated	1
10	118503	Washer, Lock 3/8 in. Plated	6
11	118403	Nut, Hex 3/8 in. UNC, Gr5, Plated	6
12	118014	Bolt, Hex 1/2 x 2 in. UNC, Gr5, Plated	11
13	118504	Washer, Lock 1/2 in. Plated	11
14	118405	Nut, Hex 1/2 in. UNC, Gr5, Plated	11

Parts - Driveline Safety Shields

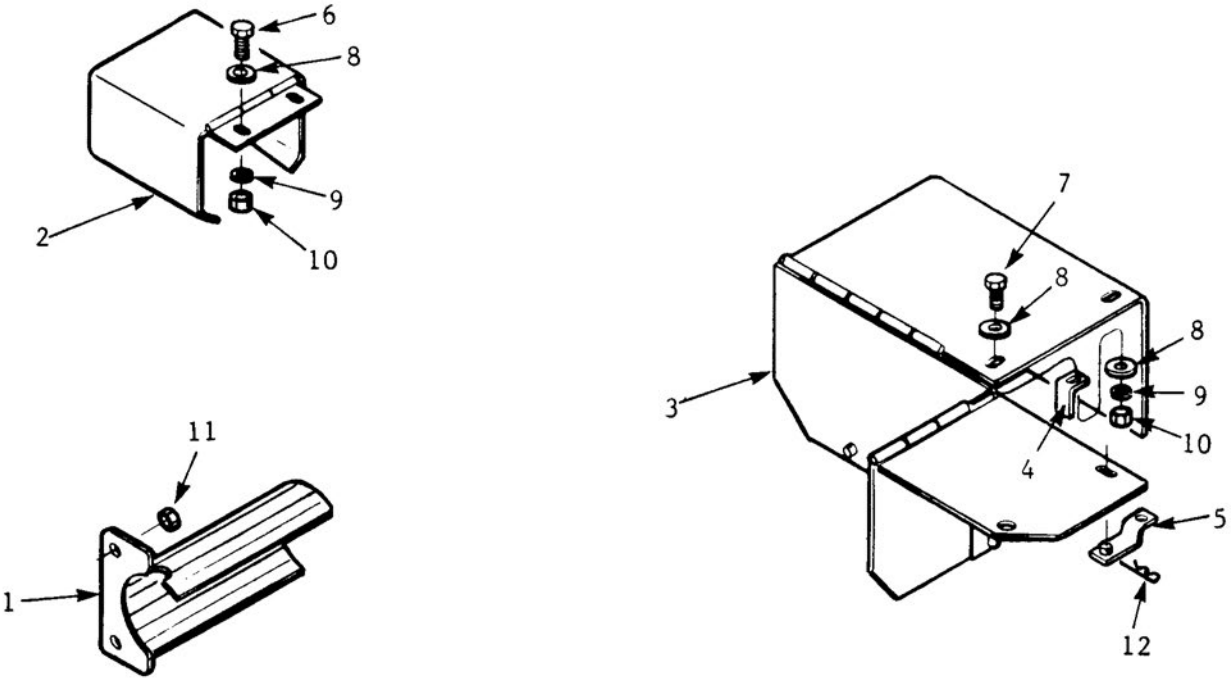

ITEM	PART No.	DESCRIPTION	QTY.
1	305243	Shield - Chain Case Input Shaft - RR 1500	1
2	305319	Shield - Front PTO - Assembly - RR 1500 (c/w 540 PTO decal)	1
3	305253	Shield - Gear Box - Assembly - RR 1500	1
4	305287	Clip, Back-up - Gear Box Shield	1
5	305285	Bar, Support - Assembly - Gear Box Shield	1
6	118005	Bolt, Hex 3/8 x 1 in. UNC, Gr5, Plated	2
7	118136	Bolt, Hex 3/8 x 1 1/2 in. UNC, Gr5, Plated	2
8	118511	Washer, Flat 3/8 in. Plated	5
9	118503	Washer, Lock 3/8 in. Plated	4
10	118403	Nut, Hex 3/8 in. UNC, Gr5, Plated	4
11	118416	Nut, Jam 5/8 in. UNC, Gr2, Plated	2
12	118831	Pin, Hair 1/8 x 2 3/8 in. Plated	1

Parts - Drum Shields

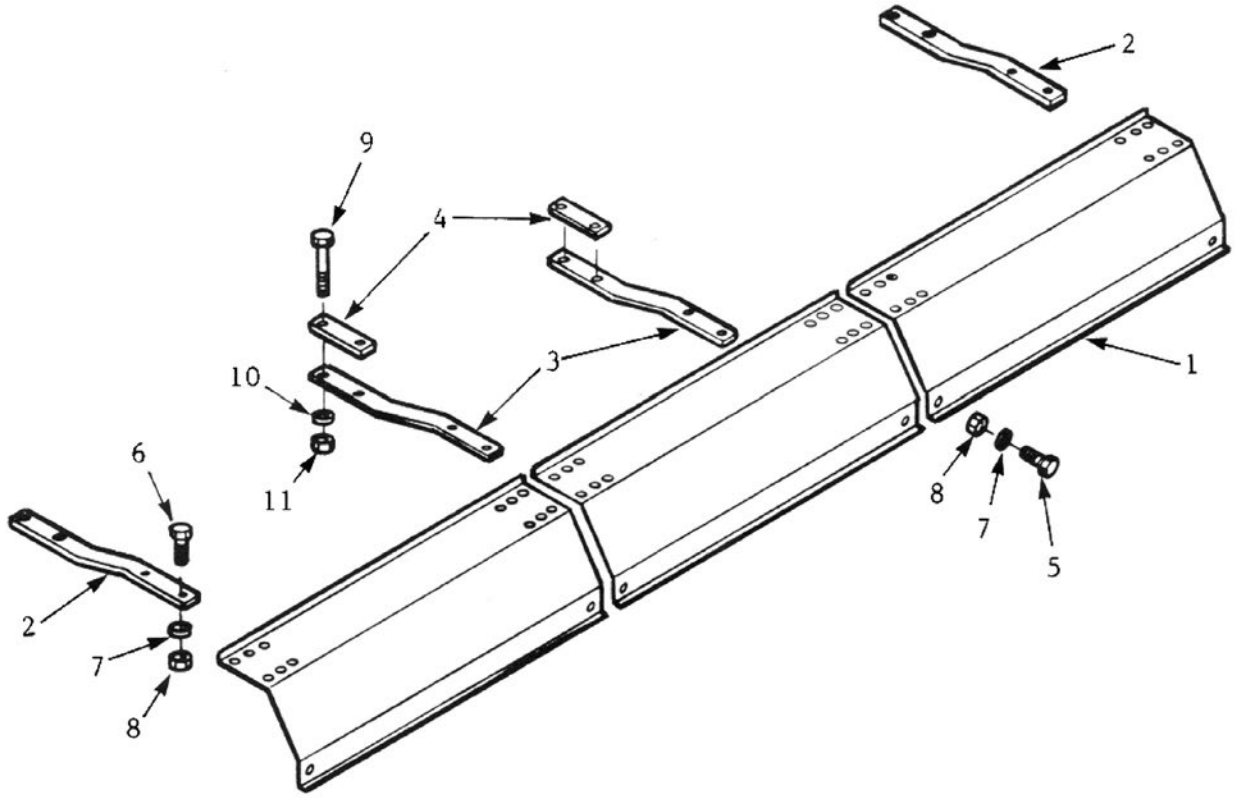

ITEM	PART No.	DESCRIPTION	QTY.
1	305252	Shield, Drum - RR 1500	3
2	305174	Bracket, Shield Support - RR (21mm large holes)	2
3	305173	Bracket, Shield Support - RR (14mm holes)	2
4	312002	Bar, Bolt - 2 hole - 6 5/8 in. hole centres	2
5	118005	Bolt, Hex 3/8 x 1 in. UNC, Gr5, Plated	2
6	118136	Bolt, Hex 3/8 x 1 1/2 in. UNC, Gr5, Plated	8
7	118503	Washer, Lock 3/8 in. Plated	10
8	118403	Nut, Hex 3/8 in. UNC, Gr5, Plated	10
9	118171	Bolt, Hex 1/2 x 7 1/2 in, UNC, Gr5, Plated	4
10	118504	Washer, Lock 1/2 in. Plated	4
11	118405	Nut, Hex 1/2 in. UNC, Gr5, Plated	4

Parts - Slow Moving Vehicle Sign & Safety Chain

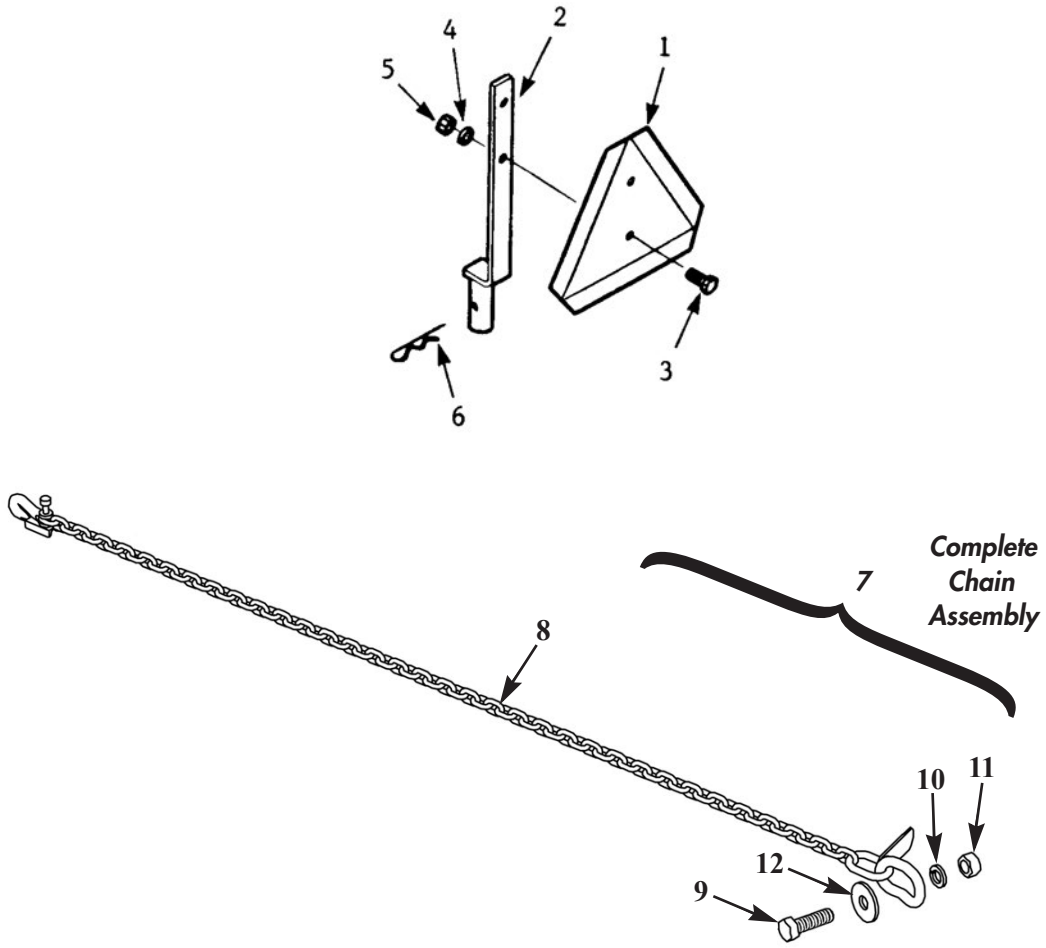

ITEM	PART No.	DESCRIPTION	QTY.
1	142135	Sign, Slow Moving Vehicle - Rigid	1
2	305235	Bracket, SMV - Assembly - RR 1500	1
3	118123	Bolt, Hex 1/4 x 1 in. UNC, Gr5, Plated	2
4	118533	Washer, Lock 1/4 in. Plated	2
5	118402	Nut, Hex 1/4 in. UNC, Gr5, Plated	2
6	118848	Pin, Hair 5/32 in.	1
7	116244	Bundle, Safety Chain Assembly - 10,100 lbs. consists of:	1
8	116245	Chain, Safety - Assembly - 10,100 lbs.	1
9	118048	Bolt, Hex 3/4 x 2 1/2 in. UNC, Gr8, Plated	1
10	118509	Washer, Lock 3/4 in. Plated	1
11	118770	Nut, Hex 3/4 in. UNC, Gr8, Plated	1
12	118635	Washer, Flat 3/4 x 2 1/4 x 3/16 in. Plated	1

2 Year
Limited Warranty

Degelman Industries LP ("Degelman") warrants to the original purchaser of a new Degelman Rock Rake 1500, purchased from an authorized Degelman dealer, that the equipment will be free from defects in material and workmanship for a period of two (2) years from the date of delivery, for non-commercial use (including farm, institutional, government, and municipality) and (1) year from the date of delivery for commercial use. The obligation of Degelman to the purchaser under this warranty is limited to the repair or replacement of defective parts in the first year and to the provision, but not the installation of replacement parts in the second year. Degelman reserves the right to inspect any equipment or parts which are claimed to have been defective in material or workmanship.

Replacement or repair parts installed in the equipment covered by this limited warranty are warranted for ninety (90) days from the date of delivery of such part or the expiration of the applicable new equipment warranty period, which ever occurs later. Warranted parts shall be provided at no cost to the user at an authorized Degelman dealer during regular working hours. Warranted replacement parts will either be replaced or rebuilt at Degelman's discretion.

Disclaimer of implied warranties & consequential damages

This warranty shall not be interpreted to render Degelman Industries LP liable for injury, death, property damage or damages of any kind, whether direct, consequential, or contingent to property. Without limiting the generality of the foregoing, Degelman shall not be liable for damages resulting from any cause beyond its reasonable control, including, without limitation, loss of crops, any expense or loss of labour, supplies, rental machinery or loss of use.

This warranty limits its replacement or repair coverage to what is consistent with the warranty of Degelmans suppliers of purchased components.

No other warranty of any kind whatsoever, express or implied is made with respect to this sale; and all implied warranties of merchantability and fitness for a particular purpose which exceed the obligations set forth in this written warranty are hereby disclaimed and excluded from this sale. This exclusion shall not apply in any jurisdiction where it is not permitted by law.

This limited warranty shall not apply:

1. If, in the sole opinion of Degelman, the unit has been subjected to misapplication, abuse, misuse, negligence, accident or incorrect off-site machine set-up.
2. To any goods that have sustained damage or deterioration attributable to a lack of routine maintenance (eg. Check and Re-torque of fastening hardware, Hydraulic fluid purities, drive train alignments, and clutch operation)
3. If parts not made or supplied by Degelman have been used in the connection with the unit, if, in the sole judgement of Degelman such use affects its performance, safety, stability or reliability.
4. If the unit has been altered or repaired outside of an authorized Degelman dealership in a manner which, in the sole judgement of Degelman, affects its performance, safety, stability or reliability.
5. To expendable or wear items such as (eg. Harrow tines, Rock Picker and Rock Rake wear teeth and replaceable bushings and pins.) and any other items that in the company's sole judgement are a wear item.

No employee or representative of Degelman Industries LP is authorized to change this limited warranty in any way or grant any other warranty unless such change is made in writing and signed by the Degelman Service Manager.

This limited warranty is subject to any future availability of supply, which may directly affect Degelman's ability to obtain materials or manufacture replacement parts.

Degelman reserves the right to make improvements in design or changes in specifications at any time, without incurring obligations to owners of equipment previously delivered.

This limited warranty is subject to compliance by the customer to the enclosed *Retail Customer's Responsibility Under Degelman Warranty.*

Make certain the warranty registration card has been forwarded to:

Degelman Industries LP
Box 830
272 Industrial Dr.
Regina, SK, Canada
S4P 3B1

Warranty

Degelman Industries warrants this product to the original owner for a period of one (1) year parts and labour and two (2) years parts from the date of purchase. All matters related to the warranty of our products must be handled through the authorized selling dealer.

Warranty does not cover normal wear of the machine components or damages caused by lack of maintenance or misuse, and is subject to the following provisions.

REPLACEMENT PARTS:
Will be warranted for a period of ninety (90) days.

WARRANTY ON MACHINES USED FOR CUSTOM WORK, RENTALS OR INDUSTRIAL USE:
Will be warranted as stated above, with the exception that it will be for a period of ninety (90) days only.

TIRES:
Will be adjusted for warranty by tire manufacturer.

LABOUR:
Any labour subject to warranty must be authorized by a Degelman representative before work is started. Warranty labour allowance and rates will be handled according to established warranty service policy.

GOVERNMENT LEGISLATION:
Warranty terms and conditions are subject to Provincial or State legislation.

MODIFICATIONS:
Warranty will be void if any component is altered or modified, unless written authorization is granted by Degelman Industries Limited.

WARRANTY ON ATTACHED EQUIPMENT:
No responsibility will be assumed for whatever damages may occur to persons, tractors or property.

© 2026 Degelman Industries LP